6SE483 JANUARY 2004

SERIES 60®

Service Manual

Detroit Diesel® Series 60 Diesel, Natural Gas-Fueled, and Diesel Marine Engines

DETROIT DIESEL CORPORATION

Detroit Diesel Corporation
13400 Outer Drive, West / Detroit, Michigan 48239-4001
Telephone: 313-592-5000
Fax: 313-592-3878
http://www.detroitdiesel.com

NOTE:
Additional copies of this service manual may be purchased from Detroit Diesel Corporation Distributors. See your yellow pages- under Engines, Diesel.

Detroit Diesel®, DDC® and the spinning arrows design are registered trademarks of Detroit Diesel Corporation. **Printed in U.S.A.**
Series 60® is a registered trademark of Detroit Diesel Corporation.
All information subject to change without notice.
6SE483 0401 Copyright ©2004 DETROIT DIESEL CORPORATION. All rights reserved.

CALIFORNIA
Proposition 65 Warning

Diesel engine exhaust and some of its constituents are known to the State of California to cause cancer, birth defects, and other reproductive harm.

40727

ABSTRACT

This manual provides instruction for servicing on-highway, construction and industrial, generator set, and marine applications of the Detroit Diesel Series 60 Diesel and Natural Gas-Fueled Engines.

Specifically a basic overview of each major component and system along with recommendations for removal, cleaning, inspection, criteria for replacement, repair and installation and mechanical troubleshooting are contained in this manual.

DDEC III/IV troubleshooting concerns are contained in the DDEC III/IV Single ECM Troubleshooting Guide, 6SE497.

 Copyright © 2004 DETROIT DIESEL CORPORATION

ENGINE EXHAUST

Consider the following before servicing engines:

CAUTION:

Diesel engine exhaust and some of its constituents are known to the State of California to cause cancer, birth defects, and other reproductive harm.

- ☐ **Always start and operate an engine in a well ventilated area.**
- ☐ **If operating an engine in an enclosed area, vent the exhaust to the outside.**
- ☐ **Do not modify or tamper with the exhaust system or emission control system.**

(Rev. 2004) *All information subject to change without notice.*
6SE483 0401 Copyright © 2004 DETROIT DIESEL CORPORATION

REVISION NOTIFICATION

Modifications to this manual are announced in the form of Service Information Bulletins. The bulletins include attachment pages and are posted on the World Wide Web (www.detroitdiesel.com/svc/sibindex.htm).

Revisions to this manual will be sent marked with a revision bar (see Example 2). Sections containing revisions will have a third line in the page footer (compare Examples 1 and 2).

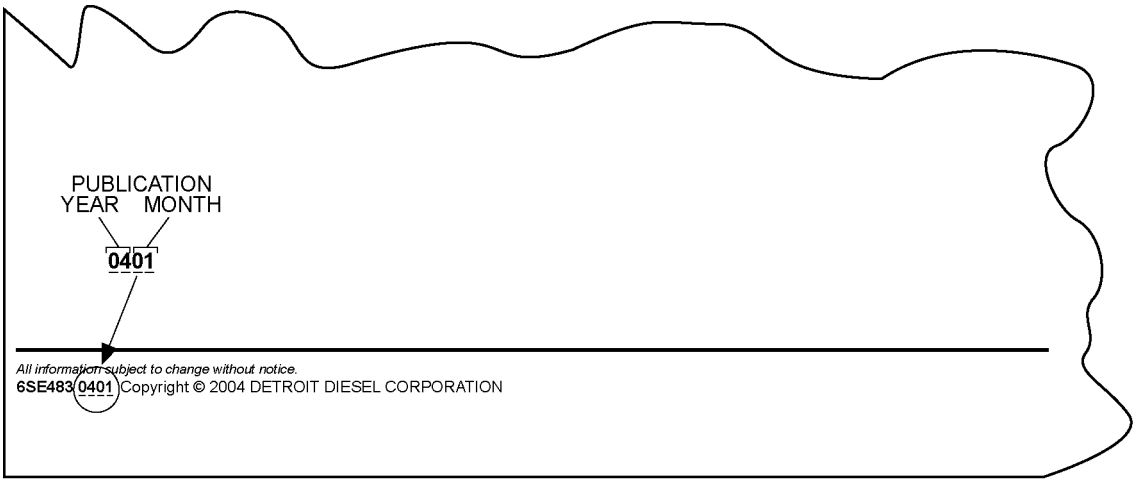

Example 1 - Unchanged Pages

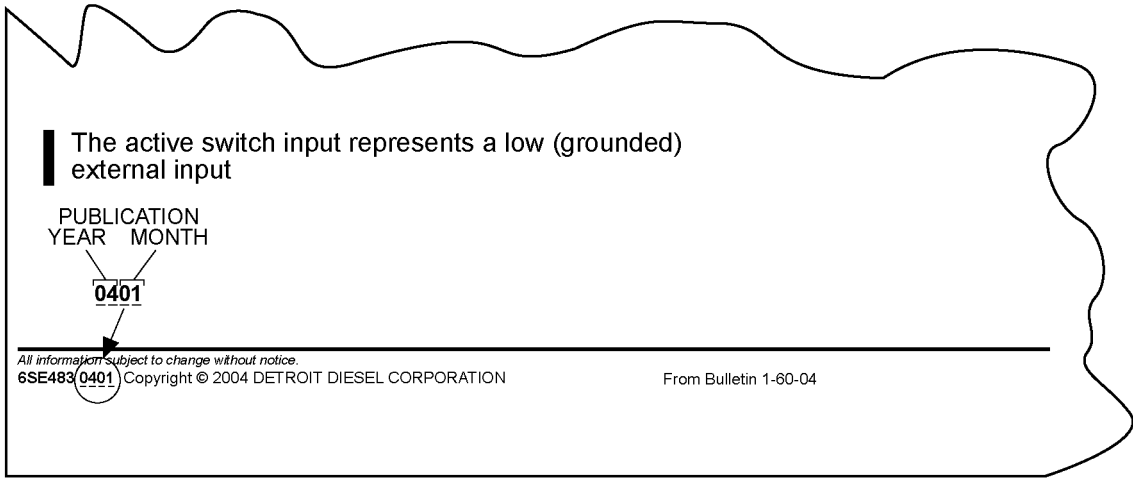

Example 2 - Changed Pages

(Rev. 2004) *All information subject to change without notice.*
6SE483 0401 Copyright © 2004 DETROIT DIESEL CORPORATION

TABLE OF CONTENTS

	GENERAL INFORMATION	**1**
	SCOPE AND USE OF THIS MANUAL	3
	CLEARANCE OF NEW PARTS AND WEAR LIMITS	3
	THE FOUR CYCLE PRINCIPLE FOR DIESEL ENGINES	4
	FOUR CYCLE PRINCIPLE FOR NATURAL GAS ENGINES	6
	GENERAL DESCRIPTION	8
	GENERAL SPECIFICATIONS	13
	GENERAL SPECIFICATIONS FOR THE SERIES 60G ENGINE	14
	ENGINE MODEL, SERIAL NUMBER AND OPTION LABEL	15
	ENGINE MODEL, SERIAL NUMBER AND OPTION LABEL (SERIES 60G ENGINE)	18
	REPLACING AND REPAIRING	19
	DISASSEMBLY	19
	CLEANING	20
	SAFETY PRECAUTIONS	26
	FLUOROELASTOMER (VITON) CAUTION	39
	ENGINE VIEWS	40
	ENGLISH TO METRIC CONVERSION	45
	DECIMAL AND METRIC EQUIVALENTS	46
	SPECIFICATIONS	48
1	**ENGINE**	
1.1	CYLINDER BLOCK AND CYLINDER LINER	1-3
1.2	CYLINDER HEAD	1-30
1.3	VALVE AND INJECTOR OPERATING MECHANISM	1-64
1.4	VALVES, SPRINGS, GUIDES, INSERTS, SEALS AND ROTATORS	1-86
1.5	ENGINE LIFTER BRACKETS	1-118
1.6	ROCKER COVER	1-126
1.7	CRANKSHAFT	1-148
1.8	CRANKSHAFT OIL SEALS	1-169
1.9	CRANKSHAFT MAIN BEARINGS	1-190
1.10	GEAR CASE COVER	1-203
1.11	GEAR CASE	1-237
1.12	CRANKSHAFT VIBRATION DAMPER	1-269
1.13	CRANKSHAFT PULLEY	1-278
1.14	FLYWHEEL	1-294
1.15	RING GEAR	1-304
1.16	FLYWHEEL HOUSING	1-306
1.17	PISTON AND PISTON RING	1-314
1.18	FORGED STEEL ONE PIECE PISTON ASSEMBLY AND PISTON RING	1-337
1.19	PISTON AND CONNECTING ROD ASSEMBLY	1-352

 Copyright © 2004 DETROIT DIESEL CORPORATION

1.20 CONNECTING ROD 1-383
1.21 CYLINDER LINER 1-398
1.22 GEAR TRAIN AND ENGINE TIMING 1-413
1.23 THRUST PLATE PERIMETER SEAL 1-443
1.24 CAMSHAFT AND CAMSHAFT BEARING 1-458
1.25 CAMSHAFT DRIVE GEAR 1-510
1.26 ADJUSTABLE IDLER GEAR ASSEMBLY 1-524
1.27 BULL GEAR AND CAMSHAFT IDLER GEAR ASSEMBLY 1-535
1.28 CRANKSHAFT TIMING GEAR AND TIMING WHEEL 1-549
1.29 ACCESSORY DRIVE 1-570
1.30 JAKE BRAKE® 1-603
1.A ADDITIONAL INFORMATION 1-663

2 FUEL SYSTEM

2.1 DIESEL FUEL SYSTEM OVERVIEW 2-5
2.2 VEHICLE SAFETY FOR THE NATURAL GAS ENGINE 2-7
2.3 ELECTRONIC UNIT INJECTOR 2-11
2.4 FUEL INJECTOR TUBE AND O-RING 2-30
2.5 N3 ELECTRONIC UNIT INJECTOR 2-46
2.6 FUEL INJECTOR TUBE 2-60
2.7 FUEL PUMP WITH SEPARATE DRIVE SHAFT AND HUB 2-64
2.8 FUEL PUMP WITH ONE-PIECE DRIVE SHAFT AND HUB ASSEMBLY 2-87
2.9 FUEL PUMP DRIVE 2-110
2.10 DIESEL FUEL FILTERS (SPIN-ON) 2-115
2.11 FUEL PRO 380/380E FUEL FILTER SYSTEM 2-124
2.12 SEA PRO 150/300 DIESEL FUEL PROCESSOR SYSTEM (MARINE) .. 2-131
2.13 SEA PRO 152 FUEL FILTER SYSTEM (MARINE ENGINE) 2-139
2.14 FUEL FILTER TYPE FOR THE SERIES 60G ENGINE 2-148
2.15 FUEL COOLER (HEAT EXCHANGER-COOLED MARINE ENGINE) 2-157
2.16 ASSEMBLY FUEL FILTER AND WATER SEPARATOR 2-161
2.17 ELECTRONIC ENGINE CONTROL 2-169
2.18 DDEC V ELECTRONIC CONTROL UNIT 2-171
2.19 DDEC III/IV ELECTRONIC CONTROL MODULE 2-179
2.20 DDEC II ELECTRONIC CONTROL MODULE 2-187
2.21 DDEC I 2-199
2.22 PROGRAMMABLE READ-ONLY MEMORY (PROM) DDEC I 2-205
2.23 ELECTRONIC DISTRIBUTOR UNIT DDEC I 2-209
2.24 ELECTRONIC FOOT PEDAL ASSEMBLY 2-213
2.25 TURBO BOOST PRESSURE SENSOR 2-214
2.26 AIR INTAKE PRESSURE SENSOR 2-216
2.27 OIL PRESSURE SENSOR 2-219
2.28 OIL TEMPERATURE SENSOR 2-221
2.29 AIR TEMPERATURE SENSOR 2-223
2.30 AIR TEMPERATURE SENSOR FOR HIGH PRESSURE FUEL SYSTEM 2-227
2.31 COOLANT TEMPERATURE SENSOR 2-229
2.32 SYNCHRONOUS REFERENCE SENSOR 2-231

(Rev. 2004) *All information subject to change without notice.*
6SE483 0401 Copyright © 2004 DETROIT DIESEL CORPORATION

2.33 TIMING REFERENCE SENSOR 2-234
2.34 COOLANT LEVEL SENSOR 2-236
2.35 FUEL PRESSURE SENSOR 2-240
2.36 FUEL TEMPERATURE SENSOR 2-243
2.37 EXHAUST GAS OXYGEN SENSOR FOR SERIES 60G ENGINES 2-247
2.38 EXHAUST TEMPERATURE SENSOR FOR THE SERIES 60G ENGINES 2-251
2.39 KNOCK SENSOR AND SIGNAL NOISE ENHANCEMENT FILTER MODULE 2-252
2.40 BAROMETRIC PRESSURE SENSOR FOR THE SERIES 60G ENGINE WITH HIGH PRESSURE FUEL SYSTEM 2-255
2.41 OVERVIEW OF HIGH PRESSURE FUEL SYSTEM FOR SERIES 60G ENGINES 2-257
2.42 FUEL PRESSURE GAGES FOR THE SERIES 60G ENGINE WITH A HIGH PRESSURE FUEL SYSTEM 2-263
2.43 VENTING AND LEAK CHECKING PROCEDURES FOR A NATURAL GAS ENGINE (HIGH PRESSURE SYSTEM) 2-265
2.44 HIGH PRESSURE FUEL REGULATOR FOR THE SERIES 60G ENGINE 2-269
2.45 PULSE WIDTH MODULATED STEPPER MOTOR VALVE (PSV) FOR SERIES 60G AUTOMOTIVE ENGINES 2-271
2.46 FUEL MIXER FOR THE SERIES 60G HIGH PRESSURE FUEL SYSTEM 2-275
2.47 FUEL SHUTOFF VALVE FOR SERIES 60G ENGINE WITH HIGH PRESSURE FUEL SYSTEM 2-278
2.48 IMPCO LOW PRESSURE FUEL REGULATOR FOR THE SERIES 60G ENGINE HIGH PRESSURE FUEL SYSTEM 2-280
2.49 OVERVIEW OF THE LOW PRESSURE NATURAL GAS FUEL SYSTEM 2-284
2.50 LOW PRESSURE FUEL REGULATOR FOR THE SERIES 60G ENGINE 2-289
2.51 FUEL MIXER FOR THE SERIES 60G LOW PRESSURE SYSTEM 2-293
2.52 VENTING AND LEAK CHECKING PROCEDURES FOR NATURAL GAS ENGINE (LOW PRESSURE SYSTEM) 2-296
2.A ADDITIONAL INFORMATION 2-299

3 LUBRICATION SYSTEM

3.1 OVERVIEW OF LUBRICATING SYSTEM 3-3
3.2 OIL PUMP 3-8
3.3 OIL PRESSURE REGULATOR VALVE 3-23
3.4 OIL PRESSURE RELIEF VALVE 3-30
3.5 OIL FILTER 3-36
3.6 OIL FILTER ADAPTOR 3-40
3.7 THERMATIC OIL CONTROL VALVE 3-46
3.8 OIL COOLER (1991 AND LATER ENGINES) 3-53
3.9 OIL COOLER (PRE-1991 ENGINES) 3-64
3.10 OIL LEVEL DIPSTICK ASSEMBLY 3-74

 Copyright © 2004 DETROIT DIESEL CORPORATION

3.11 OIL PAN 3-79
3.12 VENTILATING SYSTEM 3-87
3.A ADDITIONAL INFORMATION 3-95

4 COOLING SYSTEM

4.1 COOLING SYSTEM OVERVIEW 4-3
4.2 WATER PUMP (GEAR CASE MOUNTED - 1991 AND LATER) (GCM) .. 4-11
4.3 WATER PUMP (FRONT MOUNTED) (FM) 4-43
4.4 CHARGE AIR COOLER RAW WATER PUMP (KEEL-COOLED COMMERCIAL MARINE) 4-72
4.5 THERMOSTAT 4-80
4.6 COOLANT PRESSURE CONTROL CAP 4-92
4.7 ENGINE COOLING FAN 4-96
4.8 COOLANT FILTER AND CONDITIONER 4-106
4.9 RADIATOR 4-108
4.10 KEEL COOLING SYSTEM (COMMERCIAL MARINE) 4-109
4.11 HEAT EXCHANGER COOLING SYSTEM (PLEASURE CRAFT MARINE) 4-110
4.12 HEAT EXCHANGER (PLEASURE CRAFT MARINE) 4-112
4.13 JABSCO® ENGINE COOLING RAW WATER PUMP (MARINE) 4-128
4.A ADDITIONAL INFORMATION 4-143

5 FUEL, LUBRICATING OIL, AND COOLANT

5.1 FUEL 5-3
5.2 LUBRICATING OIL (DIESEL) 5-12
5.3 LUBRICATING OIL FOR THE SERIES 60G ENGINE 5-19
5.4 COOLANT 5-22

6 AIR INTAKE SYSTEM

6.1 AIR INTAKE SYSTEM OVERVIEW 6-3
6.2 AIR CLEANER 6-9
6.3 AIR SEPARATOR 6-11
6.4 INTAKE MANIFOLD 6-13
6.5 CLOSED CRANKCASE BREATHER FOR SERIES 60G AUTOMOTIVE ENGINES 6-24
6.6 TURBOCHARGER (DIESEL) 6-26
6.7 TURBOCHARGER SERIES 60 GAS ENGINES (GENSET) 6-82
6.8 TURBOCHARGER SERIES 60 NATURAL GAS (AUTOMOTIVE) ENGINE 6-97
6.9 RECIRCULATION VALVE FOR SERIES 60G AUTOMOTIVE ENGINE ... 6-116
6.10 CHARGE AIR COOLER 6-118
6.11 THROTTLE ACTUATOR FOR THE SERIES 60G ENGINE 6-128
6.12 AIR DRYER 6-133
6.A ADDITIONAL INFORMATION 6-135

7 EXHAUST SYSTEM

7.1 OVERVIEW OF EXHAUST SYSTEM 7-3
7.2 EXHAUST MANIFOLD 7-6

(Rev. 2004) *All information subject to change without notice.*
6SE483 0401 Copyright © 2004 DETROIT DIESEL CORPORATION

8 ELECTRICAL EQUIPMENT
8.1 OVERVIEW OF ELECTRICAL SYSTEM 8-3
8.2 BATTERY CHARGING ALTERNATOR 8-4
8.3 STORAGE BATTERY 8-26
8.4 CRANKING MOTOR 8-29
8.5 TACHOMETER DRIVE 8-35
8.6 DDEC III/IV ENGINE SENSOR HARNESS 8-41
8.7 DDEC II ENGINE SENSOR HARNESS 8-51
8.8 METRI-PACK 150 SERIES CONNECTORS 8-57
8.9 MICRO-PACK SERIES CONNECTORS 8-63
8.10 WEATHER PACK AND METRI-PACK 280 SERIES CONNECTORS 8-65
8.11 CONNECTOR TOOLS 8-69
8.12 SPLICING GUIDELINES 8-70
8.A ADDITIONAL INFORMATION 8-75

9 POWER TAKE-OFF
9.1 FRONT MOUNTED POWER TAKE-OFF 9-3
9.2 REAR ENGINE POWER TAKE-OFF (REPTO) ASSEMBLY 9-8

10 SPECIAL EQUIPMENT
10.1 AIR COMPRESSOR (VEHICLE APPLICATIONS ONLY) 10-3
10.2 AIR COMPRESSOR DRIVE HUB 10-19
10.3 AIR COMPRESSOR/RAW WATER PUMP DRIVE ASSEMBLY 10-24
10.4 KIM HOT START STARTING AID SYSTEM (MARINE) 10-50
10.A ADDITIONAL INFORMATION 10-51

11 OPERATION AND VERIFICATION
11.1 PREPARATION FOR A FIRST TIME START 11-3
11.2 STARTING 11-7
11.3 RUNNING 11-8
11.4 STOPPING 11-11
11.5 OPERATING CONDITIONS 11-12
11.6 SERIES 60G GENSET ENGINE OPERATING CONDITIONS 11-16
11.7 SERIES 60G AUTOMOTIVE ENGINE OPERATING CONDITIONS 11-18
11.8 ENGINE RUN-IN INSTRUCTIONS 11-20

12 ENGINE TUNE-UP
12.1 ENGINE TUNE-UP PROCEDURES 12-3
12.2 VALVE LASH, INJECTOR HEIGHT (TIMING) AND JAKE BRAKE® LASH ADJUSTMENTS 12-5
12.3 ENGINE TUNE-UP PROCEDURES FOR THE SERIES 60G ENGINE ... 12-25
12.4 VALVE LASH FOR THE SERIES 60G ENGINE 12-27

13 PREVENTIVE MAINTENANCE
13.1 MAINTENANCE OVERVIEW 13-3
13.2 DAILY MAINTENANCE - ALL APPLICATIONS 13-4
13.3 DAILY MAINTENANCE - MARINE APPLICATIONS 13-5
13.4 MAINTENANCE OF MARINE ENGINES 13-6
13.5 MAINTENANCE OF VEHICLE ENGINES 13-11

 Copyright © 2004 DETROIT DIESEL CORPORATION

13.6 MAINTENANCE OF ENGINES USED IN STATIONARY AND INDUSTRIAL APPLICATIONS 13-16
13.7 MAINTENANCE OF SERIES 60 DIESEL ENGINES FOR GENERATOR SET 13-22
13.8 MAINTENANCE OF SERIES 60G ENGINES FOR GENERATOR SET .. 13-25
13.9 LUBRICATING OIL AND FILTER CHANGE INTERVALS FOR GENSET 13-27
13.10 PREVENTIVE MAINTENANCE FOR THE SERIES 60G AUTOMOTIVE ENGINE (CITY TRANSIT COACH) 13-28
13.11 MAINTENANCE OF SERIES 60G AUTOMOTIVE ENGINES 13-31
13.12 LUBRICATING OIL AND FILTER CHANGE INTERVALS FOR GENSET (WITH HIGH SULFUR FUELS) 13-37
13.13 DESCRIPTION OF MAINTENANCE ITEMS 13-38
13.14 AIR SEPARATOR FILTER ELEMENT (MARINE) 13-75
13.15 DETECTING INTERNAL FUEL LEAKS 13-79
13.16 CLEANING CONTAMINATED LUBRICATION OIL SYSTEM 13-87

14 STORAGE

14.1 PREPARING ENGINE FOR STORAGE 14-3
14.2 RESTORING AN EXTENDED STORAGE ENGINE 14-10
14.3 WINTER STORAGE FOR MARINE ENGINE 14-14

15 IGNITION SYSTEM

15.1 OVERVIEW OF IGNITION SYSTEM 15-3
15.2 COIL OVER PLUG IGNITION SYSTEM 15-4
15.3 IGNITION BOOT ASSEMBLY 15-9
15.4 IGNITER MODULE 15-10
15.5 IGNITER MODULE BRACKET 15-11
15.6 IGNITION COIL HARNESS 15-12
15.7 SPARK PLUGS 15-16

16 MISFIRING CYLINDER

16.1 POOR VEHICLE GROUND 16-3
16.2 AERATED FUEL 16-5
16.3 IMPROPER INJECTOR CALIBRATION SETTING (DDEC III/IV ENGINES ONLY) 16-7
16.4 IMPROPER VALVE CLEARANCE OR INJECTOR HEIGHT, WORN OR DAMAGED CAMSHAFT LOBES AND ROLLERS 16-12
16.5 FAULTY FUEL INJECTOR 16-24
16.6 FAULTY ELECTRONIC CONTROL MODULE 16-26
16.7 WORN OR DAMAGED VALVE OR CYLINDER KIT 16-28

17 STARTING DIFFICULTY (ENGINE ROTATES)

17.1 ELECTRONIC CONTROL MODULE WIRING HARNESS 17-3
17.2 EMPTY FUEL TANK 17-6
17.3 LOW BATTERY VOLTAGE 17-7
17.4 CORRODED OR DAMAGED BATTERY TERMINALS 17-9
17.5 DEFECTIVE MAGNETIC SWITCH 17-10
17.6 DEFECTIVE STARTER 17-13
17.7 LOW CRANKING SPEED 17-15

(Rev. 2004) *All information subject to change without notice.*
6SE483 0401 Copyright © 2004 DETROIT DIESEL CORPORATION

17.8 FUEL SUPPLY VALVE 17-17
17.9 PLUGGED FUEL FILTER(S) 17-19
17.10 FUEL PUMP 17-21
17.11 AERATED FUEL 17-23
17.12 RESTRICTIVE AIR FILTER 17-25
17.13 LOW COMPRESSION 17-27

18 NO START (ENGINE WILL NOT ROTATE)

18.1 DISCHARGED BATTERY 18-3
18.2 DEFECTIVE MAGNETIC SWITCH 18-5
18.3 DEFECTIVE STARTER 18-8
18.4 INTERNAL ENGINE DAMAGE 18-10

19 EXCESSIVE OIL CONSUMPTION

19.1 MISCALIBRATED DIPSTICK 19-3
19.2 EXTERNAL OIL LEAKS 19-4
19.3 LEAKING OIL COOLER CORE 19-6
19.4 DEFECTIVE AIR COMPRESSOR 19-8
19.5 DEFECTIVE TURBOCHARGER 19-10
19.6 WORN OR DAMAGED VALVE OR CYLINDER KIT 19-11

20 EXCESSIVE CRANKCASE PRESSURE

20.1 OBSTRUCTION OR DAMAGE TO ROCKER COVER BREATHER 20-3
20.2 DEFECTIVE AIR COMPRESSOR 20-5
20.3 DEFECTIVE TURBOCHARGER 20-7
20.4 WORN OR DAMAGED VALVE OR CYLINDER KIT 20-8

21 EXCESSIVE EXHAUST SMOKE (BLACK OR GRAY)

21.1 IMPROPER GRADE OF FUEL OIL 21-3
21.2 RESTRICTED AIR CLEANER ELEMENT 21-5
21.3 RESTRICTED OR CRACKED CHARGE AIR COOLER 21-7
21.4 FAULTY EXHAUST SYSTEM 21-9
21.5 FAULTY FUEL INJECTOR 21-11
21.6 DEFECTIVE TURBOCHARGER 21-13

22 EXCESSIVE BLUE SMOKE

22.1 DEFECTIVE TURBOCHARGER 22-3
22.2 WORN OR DAMAGED VALVE OR CYLINDER KIT 22-6

23 EXCESSIVE WHITE SMOKE

23.1 IMPROPER GRADE OF FUEL 23-3
23.2 DEFECTIVE FUEL PUMP 23-5
23.3 AERATED FUEL 23-7
23.4 IMPROPER INJECTOR CALIBRATION SETTING (DDEC III/IV ENGINES ONLY) 23-9
23.5 IMPROPER VALVE CLEARANCE OR INJECTOR HEIGHT, WORN OR DAMAGED CAMSHAFT LOBES AND ROLLERS 23-11
23.6 FAULTY FUEL INJECTOR 23-13
23.7 FAULTY ELECTRONIC CONTROL MODULE 23-14

 Copyright © 2004 DETROIT DIESEL CORPORATION

24 ROUGH RUNNING OR STALLING
24.1 LOW BATTERY VOLTAGE 24-3
24.2 AERATED FUEL OIL 24-5
24.3 INSUFFICIENT FUEL OIL FLOW 24-6
24.4 HIGH FUEL OIL TEMPERATURE RETURN 24-8
24.5 IMPROPER INJECTOR CALIBRATION SETTING (DDEC III/IV ENGINES ONLY) 24-11
24.6 LOW COMPRESSION PRESSURE 24-13

25 LACK OF POWER
25.1 AERATED FUEL 25-3
25.2 HIGH FUEL PRESSURE 25-5
25.3 HIGH FUEL OIL TEMPERATURE RETURN 25-9
25.4 RESTRICTED AIR CLEANER ELEMENT 25-11
25.5 RESTRICTED OR CRACKED CHARGE AIR COOLER OR LEAKING INTAKE MANIFOLD 25-13
25.6 FAULTY EXHAUST SYSTEM 25-15
25.7 HIGH INLET AIR TEMPERATURE 25-17
25.8 HIGH ALTITUDE OPERATION 25-19
25.9 INCORRECT CAMSHAFT TIMING 25-21

26 LOW OIL PRESSURE
26.1 IMPROPER ENGINE OIL LEVEL 26-3
26.2 IMPROPER LUBRICATING OIL VISCOSITY 26-5
26.3 LUBRICATING OIL DILUTED WITH FUEL OIL OR ENGINE COOLANT 26-7
26.4 FAULTY OIL PRESSURE GAUGE SENSOR 26-9
26.5 OIL PRESSURE GAUGE LINE OBSTRUCTED 26-11
26.6 ROCKER ARM SHAFT PLUGS MISSING (NEW OR REBUILT ENGINES ONLY) 26-13
26.7 RESTRICTED OIL COOLER 26-15
26.8 NONFUNCTIONAL OR STICKING OIL PRESSURE REGULATOR VALVE 26-17
26.9 DEFECTIVE BYPASS VALVE 26-19
26.10 DEFECTIVE PRESSURE RELIEF VALVE 26-20
26.11 DEFECTIVE PICKUP SCREEN TUBE AND SCREEN ASSEMBLY 26-22
26.12 DEFECTIVE CRANKSHAFT MAIN BEARING SHELLS 26-24
26.13 DEFECTIVE OIL PUMP ASSEMBLY 26-26

27 HIGH ENGINE COOLANT TEMPERATURE
27.1 IMPROPER ENGINE COOLANT LEVEL 27-3
27.2 INSUFFICIENT RADIATOR AIR CIRCULATION 27-5
27.3 FAULTY PRESSURE CONTROL CAP 27-7
27.4 DEFECTIVE COOLANT HOSES 27-9
27.5 FAN BELTS ARE INCORRECTLY ADJUSTED 27-11
27.6 INOPERATIVE THERMO-MODULATED FAN 27-13
27.7 FAULTY THERMOSTATS 27-15
27.8 FAULTY WATER PUMP 27-17
27.9 COMBUSTION GASES IN COOLANT 27-19

(Rev. 2004) *All information subject to change without notice.*
6SE483 0401 Copyright © 2004 DETROIT DIESEL CORPORATION

27.10 ABNORMAL RADIATOR COOLANT FLOW 27-21

28 LOW COOLANT TEMPERATURE

28.1 FAULTY THERMOSTATS 28-3

28.2 INSUFFICIENT RADIATOR AIR CIRCULATION 28-5

29 POOR FUEL ECONOMY

29.1 PROBABLE CAUSE #1 29-3

INDEX Index-1

 Copyright © 2004 DETROIT DIESEL CORPORATION

(Rev. 2004) *All information subject to change without notice.*
6SE483 0401 Copyright © 2004 DETROIT DIESEL CORPORATION

GENERAL INFORMATION

Section	Page
SCOPE AND USE OF THIS MANUAL	3
CLEARANCE OF NEW PARTS AND WEAR LIMITS	3
THE FOUR CYCLE PRINCIPLE FOR DIESEL ENGINES	4
FOUR CYCLE PRINCIPLE FOR NATURAL GAS ENGINES	6
GENERAL DESCRIPTION	8
GENERAL SPECIFICATIONS	13
GENERAL SPECIFICATIONS FOR THE SERIES 60G ENGINE	14
ENGINE MODEL, SERIAL NUMBER AND OPTION LABEL	15
ENGINE MODEL, SERIAL NUMBER AND OPTION LABEL (SERIES 60G ENGINE)	18
REPLACING AND REPAIRING	19
DISASSEMBLY	19
CLEANING	20
SAFETY PRECAUTIONS	26
FLUOROELASTOMER (VITON) CAUTION	39
ENGINE VIEWS	40
ENGLISH TO METRIC CONVERSION	45
DECIMAL AND METRIC EQUIVALENTS	46
SPECIFICATIONS	48

(Rev. 2004) *All information subject to change without notice.*
6SE483 0401 Copyright © 2004 DETROIT DIESEL CORPORATION

SCOPE AND USE OF THIS MANUAL

This manual contains complete instructions on operation, adjustment (tune-up), preventive maintenance, and repair (including complete overhaul) for the Series 60 Inline Diesel Engines. This manual was written primarily for persons servicing and overhauling the engine. In addition, this manual contains all of the instructions essential to the operators and users. Basic maintenance and overhaul procedures are common to all Series 60 Engines, and apply to all engine models.

This manual is divided into numbered sections. Section one covers the engine (less major assemblies). The following sections cover a complete system such as the fuel system, lubrication system, or air system. Each section is divided into subsections which contain complete maintenance and operating instructions for a specific engine subassembly. Each section begins with a table of contents. Pages and illustrations are numbered consecutively within each section.

Information can be located by using the table of contents at the front of the manual or the table of contents at the beginning of each section. Information on specific subassemblies or accessories within the major section is listed immediately following the section title.

CLEARANCE OF NEW PARTS AND WEAR LIMITS

New parts clearances apply only when all new parts are used at the point where the various specifications apply. This also applies to references within the text of the manual. The column entitled "Limits" must be qualified by the judgement of personnel responsible for installing new parts. For additional information, refer to the section entitled "Inspection" within this section. Refer to section ADDITIONAL INFORMATION, "Table of Specifications, New Clearances, and Wear Limits" under "Specifications", for a listing of clearances of new parts and wear limits on used parts.

 Copyright © 2004 DETROIT DIESEL CORPORATION

THE FOUR CYCLE PRINCIPLE FOR DIESEL ENGINES

The diesel engine is an internal combustion engine, in which the energy of burning fuel is converted into energy to work the cylinder of the engine. In the diesel engine, air alone is compressed in the cylinder, raising its temperature significantly. After the air has been compressed, a charge of fuel is sprayed into the cylinder and ignition is accomplished by the heat of compression. The four piston strokes of the cycle occur in the following order: intake, compression, power and exhaust. See Figure 1.

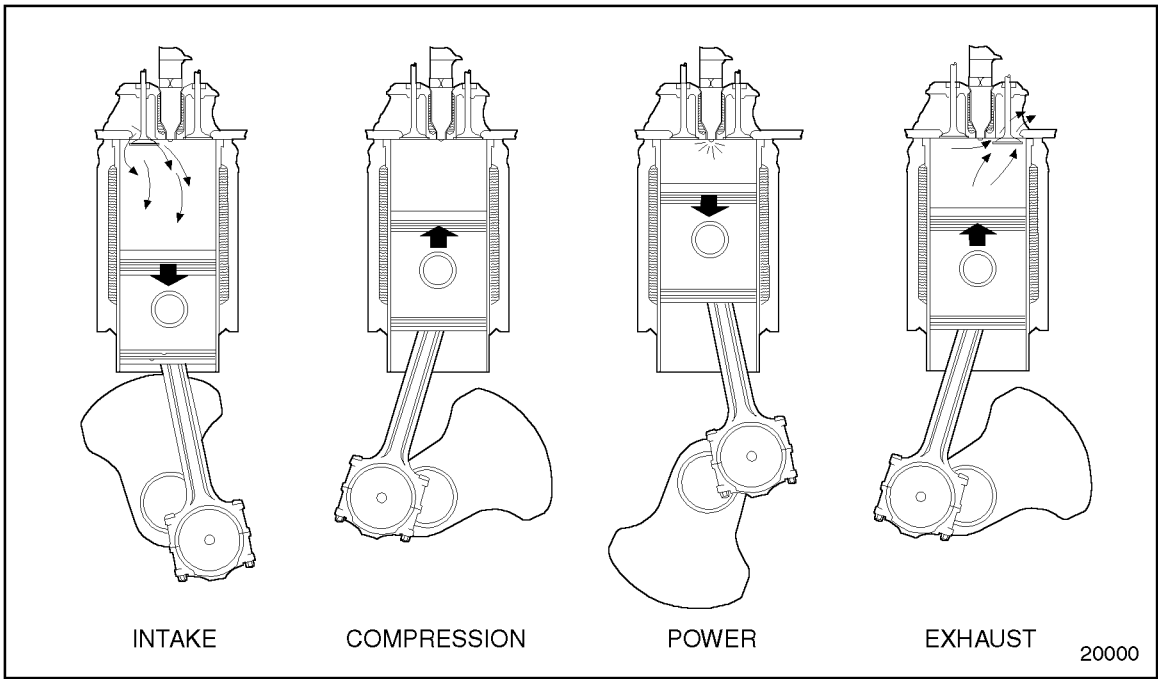

Figure 1 The Four Stroke Cycle (Diesel)

Intake Stroke

During the intake stroke, the piston travels downward, the intake valves are open, and the exhaust valves are closed. The down stroke of the piston facilitates air from the intake manifold to enter the cylinder through the open intake valve. The turbocharger, by increasing the air pressure in the engine intake manifold, assures a full charge of air is available for the cylinder.

The intake charge consists of air only with no fuel mixture.

(Rev. 2004) *All information subject to change without notice.*
6SE483 0401 Copyright © 2004 DETROIT DIESEL CORPORATION

Compression Stroke

At the end of the intake stroke, the intake valves close and the piston starts upward on the compression stroke. The exhaust valves remain closed.

At the end of the compression stroke, the air in the combustion chamber has been compressed by the piston to occupy a space about one-fifteenth as great in volume as it occupied at the beginning of the stroke. Thus, the compression ratio is 15:1.

Compressing the air into a small space causes the temperature of that air to rise. Near the end of the compression stroke, the pressure of the air above the piston is approximately 3445 to 4134 kPa (500 to 600 lb/in.^{2}) and the temperature of that air is approximately 538°C (1000°F). During the last part of the compression stroke and the early part of the power stroke, a small metered charge of fuel is injected into the combustion chamber.

Almost immediately after the fuel charge is injected into the combustion chamber, the fuel is ignited by the hot air and starts to burn, beginning the power stroke.

Power Stroke

During the power stroke, the piston travels downward and all intake and exhaust valves are closed.

As the fuel is added and burns, the gases get hotter, the pressure increases, pushing the piston downward and adding to crankshaft rotation.

Exhaust Stroke

During the exhaust stroke, the intake valves are closed; the exhaust valves are open, and the piston is on its up stroke.

The burned gases are forced out of the combustion chamber through the open exhaust valve port by the upward travel of the piston.

From the preceding description, it is apparent that the proper operation of the engine depends upon the two separate functions: first, compression for ignition, and second, that fuel be measured and injected into the compressed air in the cylinder in the proper quantity and at the proper time.

 Copyright © 2004 DETROIT DIESEL CORPORATION

FOUR CYCLE PRINCIPLE FOR NATURAL GAS ENGINES

This engine is a four cycle internal combustion engine, in which the energy of burning fuel is converted into energy to work the cylinder of the engine. However, unlike the diesel engine, a combustible air and fuel mixture is introduced to the cylinder during the intake stroke. Upon compression, the temperature of this mixture is increased to a temperature below its auto-ignition threshold. Combustion occurs through means of a spark plug which ignites the mixture.
See Figure 2 for the four stroke cycle utilized on the natural gas engine.

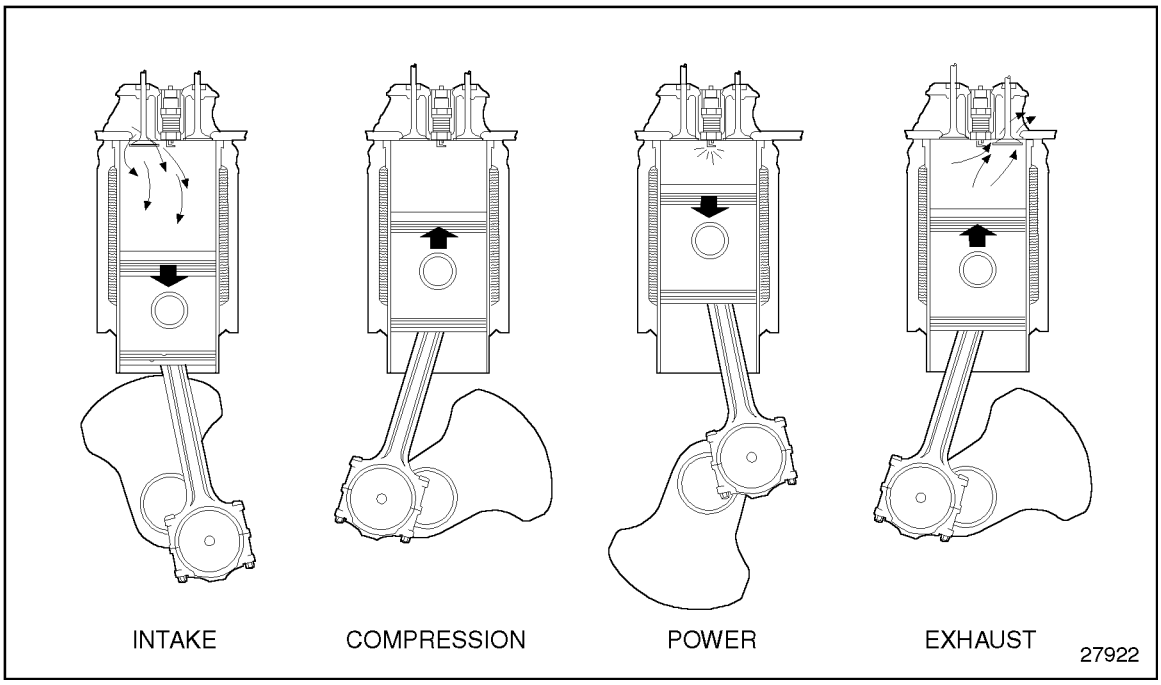

Figure 2 The Four Stroke Cycle (Series 60G Engine)

(Rev. 2004) *All information subject to change without notice.*
6SE483 0401 Copyright © 2004 DETROIT DIESEL CORPORATION

Intake Stroke

During the intake stroke, the piston travels downward, the intake valves are open, and the exhaust valve are closed. The downward stroke of the piston increases the volume in the cylinder and draws in a fresh air and fuel mixture through the intake valves.

Compression Stroke

At the end of the intake stroke, the intake valves close and the piston starts upward on the compression stroke. The exhaust valves remain closed.

At the end of the compression stroke, the air-fuel mixture in the combustion chamber has been compressed by the piston to occupy a space about one-tenth as great in volume as it occupied at the beginning the stroke. Thus, the compression ratio is 10:1. This act of compression dramatically increases the temperature of the air-fuel mixture, to a temperature below its auto-ignition threshold. It is a timed, externally supplied ignition through the spark plug that actually causes ignition to the mixture. The timed spark is introduced to the cylinder near the end of the compression stroke, which initiates combustion and begins the power stroke.

Power Stroke

During the power stroke, the piston travels downward and all intake and exhaust valves are closed.

As the throttle is opened to introduce a greater charge of air-fuel mixture to the cylinders, the increasing pressure of combustion against the pistons adds to crankshaft rotation.

Exhaust Stroke

During the exhaust stroke, the intake valves are closed, the exhaust valves are open, and the piston is on its up stroke.

The burning gases are forced out of the combustion chamber through the open exhaust valve port by the upward travel of the piston.

 Copyright © 2004 DETROIT DIESEL CORPORATION

GENERAL DESCRIPTION

The Series 60® Diesel Engine described in this manual is a four-stroke cycle, high speed, diesel engine.

It uses an inline cast iron block and has a cast iron cylinder head that contains a single overhead camshaft. The camshaft actuates all the valves (two intake, two exhaust per cylinder), and operates the fuel injectors. The vertically aligned gear train, located at the front end of the engine in a gear case, contains drive gears for the lubricating oil pump, crankshaft, camshaft, air compressor drive, fuel pump drive, water pump and alternator accessory drives.

Each current engine is equipped with dual full-flow oil filters, an oil cooler, one or two fuel oil filters, a turbocharger and an electronic engine control system.

Full pressure lubrication is supplied to all main, connecting, camshaft and rocker assembly bearings and to other moving parts. A gear-type pump draws oil from the oil pan through a screen and delivers it to the oil filters. From the filter, a small portion of the oil is delivered directly to the turbocharger by an external oil line. The remainder of the oil flows to the oil cooler, or bypasses the cooler, and then enters a longitudinal oil gallery in the cylinder block where the supply divides. Part of the oil goes to the cylinder head where it feeds the camshaft bearings and rocker assemblies. The remainder of the oil goes to the main bearings and connecting rod bearings via the drilled oil passages in the crankshaft. Drilled passages in the connecting rod feed oil to the piston pin and the inner surface of the piston crown.

Coolant is circulated through the engine by a centrifugal-type water pump. The cooling system, including the radiator, is a closed system. Heat is removed from the coolant by the radiator. Control of the engine temperature is accomplished by thermostats that regulate the flow of the coolant within the cooling system.

Fuel is drawn from the supply tank through the primary fuel filter by a gear-type fuel pump. From there, the fuel is forced through the secondary fuel filter and into the fuel inlet in the cylinder head and to the injectors. Excess fuel is returned, through a restricted fitting, to the supply tank through the outlet connecting line. Since the fuel is constantly circulating through the injectors, it serves to cool the injectors and to carry off any air in the fuel system. Air separators are available, as optional equipment.

Air is supplied by the turbocharger to the intake manifold and into the engine cylinders after passing through an air-to-air charge air cooler mounted ahead of the cooling system radiator. The charge air cooler cools the pressurized intake air charge coming from the turbocharger before it enters the intake manifold.

Engine starting may be provided by an electric or air starting motor energized by a storage battery or air pressure storage system. A battery charging alternator, with a suitable voltage regulator, serves to keep the battery charged.

The Series 60 diesel engine was designed to be electronically controlled. The Detroit Diesel Electronic Control (DDEC) system has evolved with the product.

(Rev. 2004) *All information subject to change without notice.*
6SE483 0401 Copyright © 2004 DETROIT DIESEL CORPORATION

DDEC I

DDEC I controls the timing and amount of fuel injected into each cylinder. The system also monitors several engine functions using various sensors that send electrical signals to the main Electronic Control Module (ECM). See Figure 3. The ECM uses this information to send a command pulse to the Electronic Distributor Unit (EDU). The EDU functions as the high current switching unit for actuation of the Electronic Unit Injector (EUI) solenoids. The ECM also has the ability to limit or shut down the engine completely (depending on option selection) in the case of damaging engine conditions, such as low oil pressure, low coolant level, or high oil temperature.

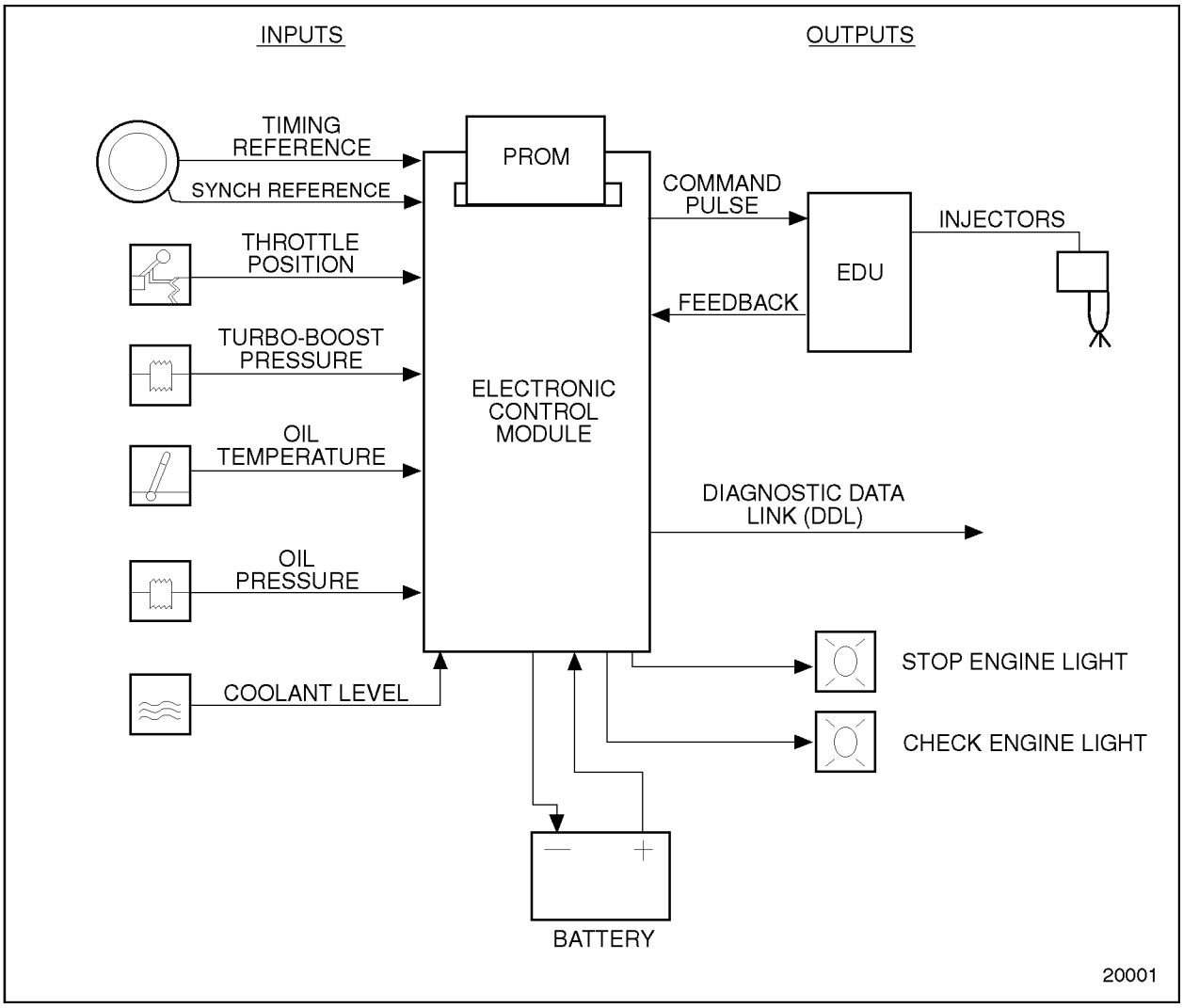

Figure 3 Schematic Diagram of DDEC I

 Copyright © 2004 DETROIT DIESEL CORPORATION

DDEC II

DDEC II also controls the timing and amount of fuel injected into each cylinder. The system also monitors several engine sensors that send electrical signals to the main ECM. See Figure 4. Unlike DDEC I, the DDEC II ECM uses this information to actuate the EUI solenoids. DDEC II incorporates all of the control electronics into one engine mounted ECM instead of the ECM and EDU that are required in DDEC I. The ECM also has the ability to limit or shut down the engine completely (depending on option selection) in the case of damaging engine conditions, such as low oil pressure, low coolant level, or high oil temperature.

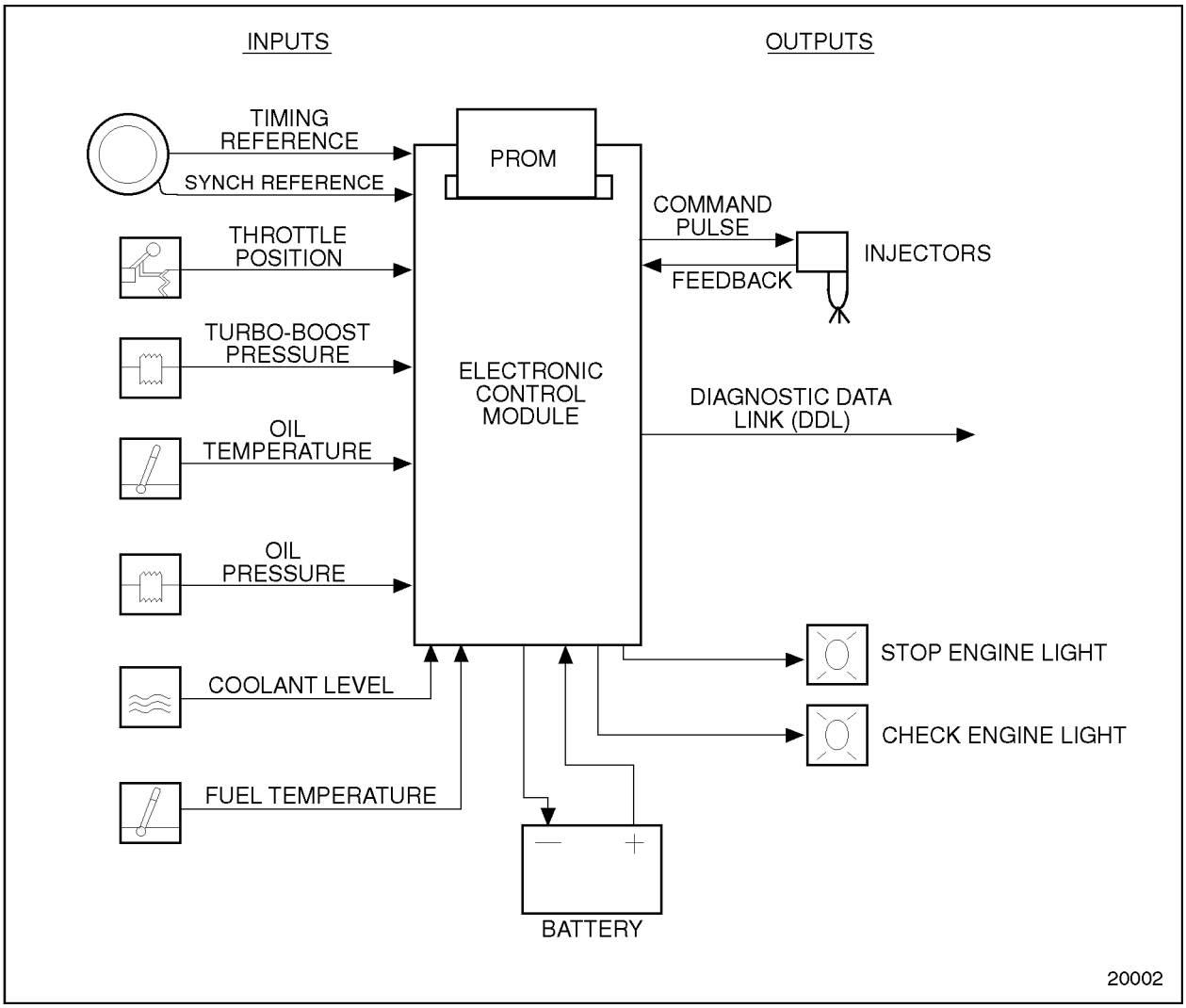

Figure 4 Schematic Diagram of DDEC II

(Rev. 2004) *All information subject to change without notice.*
6SE483 0401 Copyright © 2004 DETROIT DIESEL CORPORATION

DDEC III/IV

The DDEC III/IV ECM receives electronic inputs from sensors on the engine and vehicle, and uses the information to control engine operation. It computes fuel timing and fuel quantity based upon predetermined calibration tables in its memory.

Fuel is delivered to the cylinders by the EUIs, which are cam-driven to provide the mechanical input for pressurization of the fuel. The ECM controls solenoid operated valves in the EUIs to provide precise fuel delivery. See Figure 5.

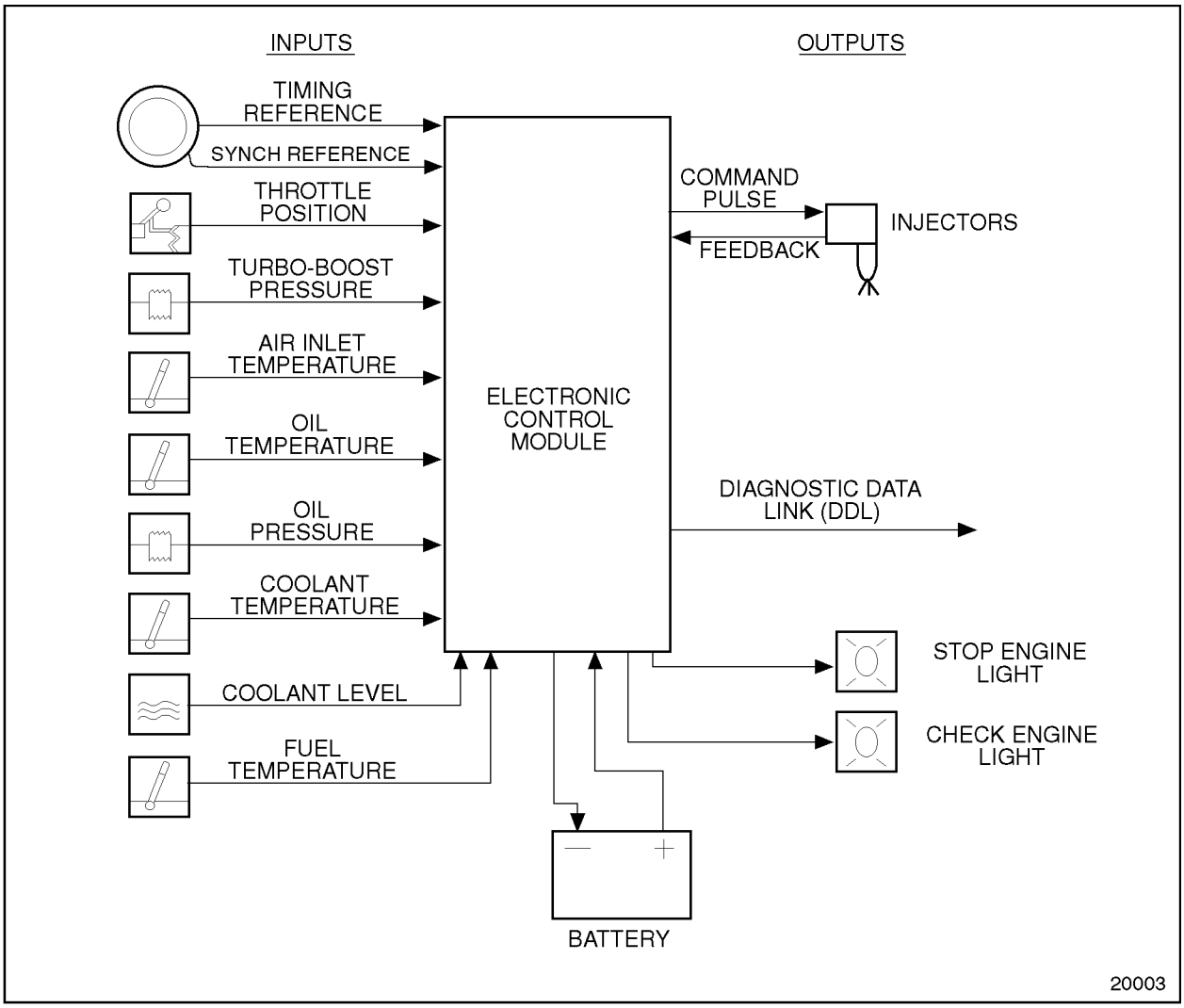

Figure 5 Schematic Diagram of DDEC III/IV

Portable equipment facilitates access to diagnostic capabilities of DDEC III/IV's. The Diagnostic Data Reader (DDR) requests and receives engine data and diagnostic codes. This equipment provides many unique capabilities including cylinder cutout, printer output, and data snapshot. The DDR also provides limited programming capability.

 Copyright © 2004 DETROIT DIESEL CORPORATION

DDEC III/IV (Series 60G Engine)

The DDEC III/IV ECM receives electronic inputs from sensors on the engine and vehicle, and uses the information to control engine operation.

Fuel is controlled by DDEC. See Figure 6.

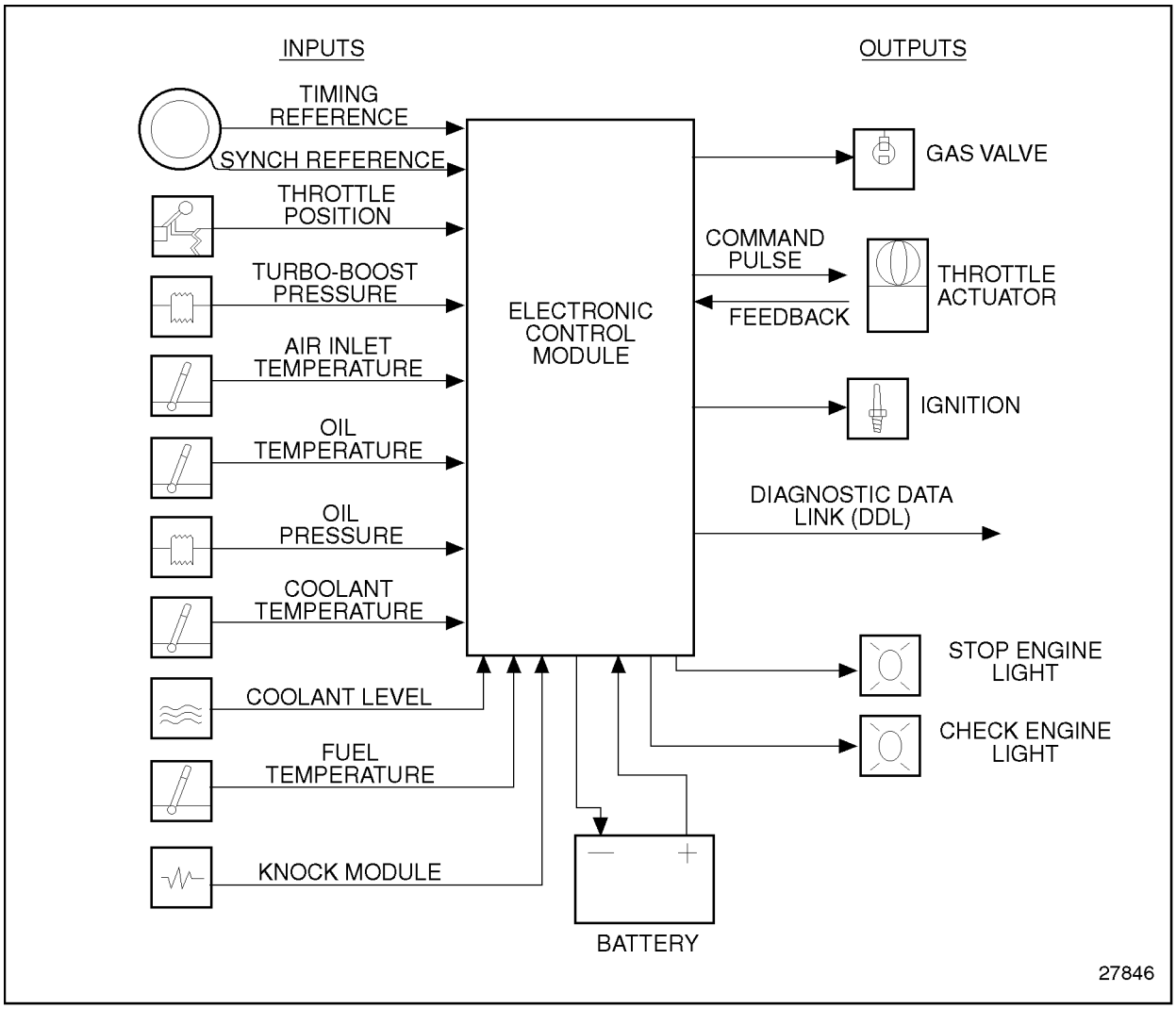

Figure 6 Schematic Diagram of DDEC III/IV (Series 60G Engine)

Portable equipment facilitates access to diagnostic capabilities of DDEC III/IV's. The Diagnostic Data Reader (DDR) requests and receives engine data and diagnostic codes. This equipment provides many unique capabilities including cylinder cutout, printer output, and data snapshot. The DDR also provides limited programming capability.

(Rev. 2004) *All information subject to change without notice.*
6SE483 0401 Copyright © 2004 DETROIT DIESEL CORPORATION

GENERAL SPECIFICATIONS

The general specifications for the Series 60 Engine are listed in Table 1. See Figure 7 for the cylinder designation and firing order.

General Specifications	11.1L Family	12.7L Family	14L Family
Total Displacement (L)	11.1	12.7	14.0
Total Displacement (in.^{3})	677	775	855
Type	4-cycle	4-cycle	4-cycle
Number of Cylinders	6	6	6
Bore (in.)	5.12	5.12	5.24
Bore (mm)	130	130	133
Stroke (in.)	5.47	6.30	6.61
Stroke (mm)	139	160	168
Compression Ratio	16.0:1	15.0:1 or 16.5:1	15.0:1 or 16.5:1
Number of Main Bearings	7	7	7

Table 1 Specifications for the Series 60 Engine

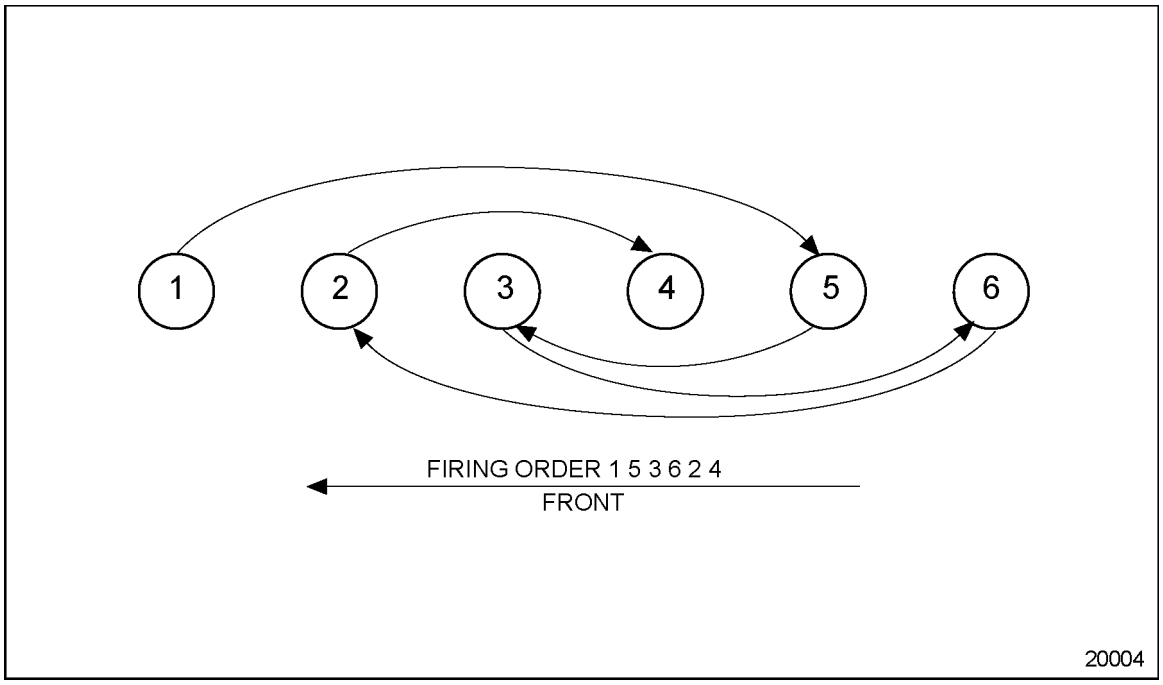

Figure 7 Cylinder Designation and Firing Order

 Copyright © 2004 DETROIT DIESEL CORPORATION

GENERAL SPECIFICATIONS FOR THE SERIES 60G ENGINE

The general specifications for the Series 60G Engine are listed in Table 2. See Figure 8 for cylinder designation and firing order.

General Description	Specification
Total Displacement (L)	12.7
Total Displacement (in.^{3})	775
Type	Four-cycle
Number of Cylinders	6
Bore (in.)	5.12
Bore (mm)	130
Stroke (in.)	6.30
Stroke (mm)	160
Compression Ratio	10:1
Number of Main Bearings	7

Table 2 General Specifications for the Series 60G Engine

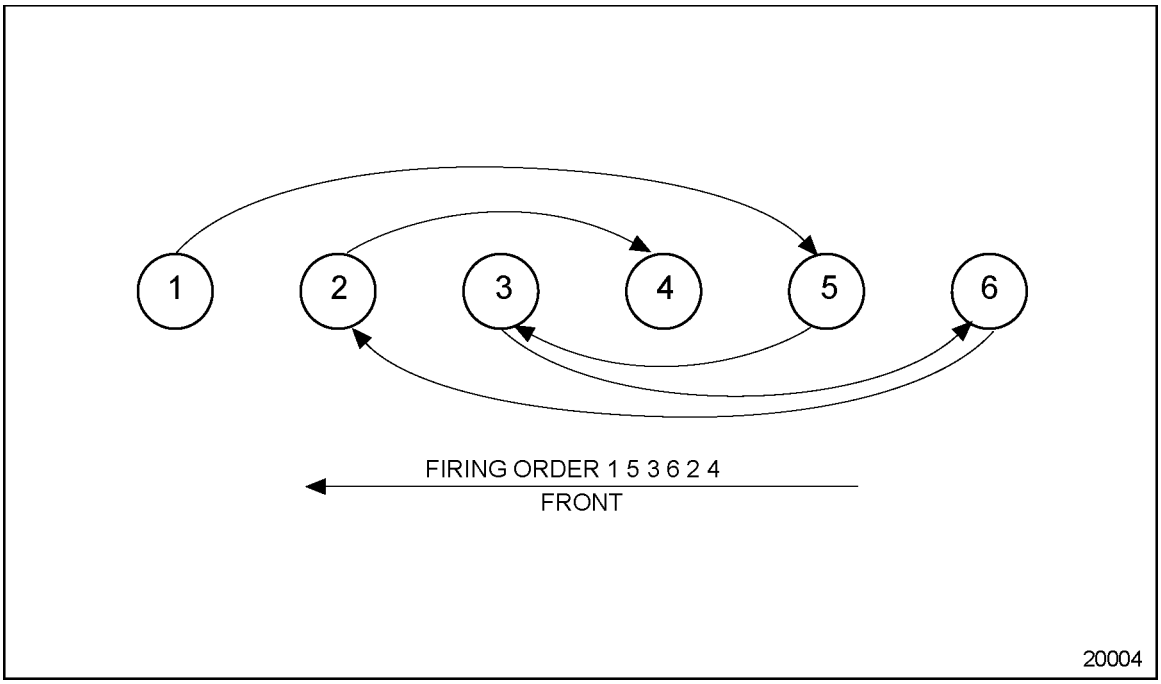

Figure 8 Cylinder Designation and Firing Order for the Series 60G Engine

(Rev. 2004) *All information subject to change without notice.*
6SE483 0401 Copyright © 2004 DETROIT DIESEL CORPORATION

ENGINE MODEL, SERIAL NUMBER AND OPTION LABEL

The engine serial and model numbers are stamped on the cylinder block. See Figure 9. A guide to the meaning of the model number digits is listed in Table 3.

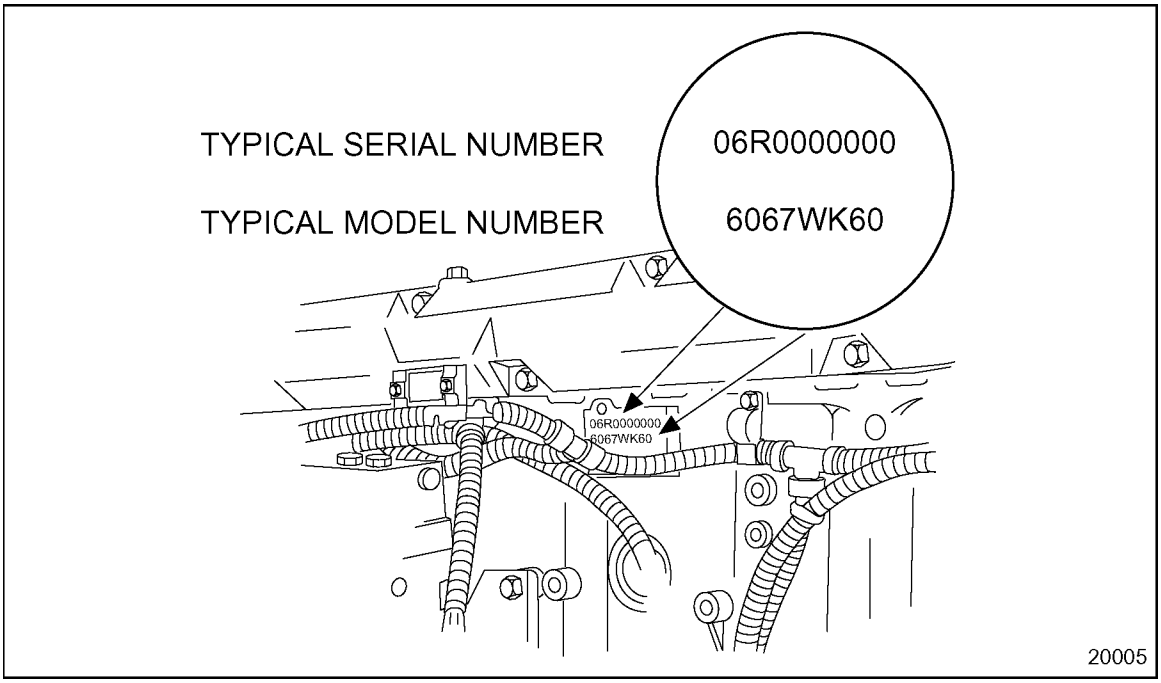

Figure 9 Location of Engine Serial and Model Number on Block

 Copyright © 2004 DETROIT DIESEL CORPORATION

Digit	Value	Meaning
1	6	Series 60 Engine
2 & 3	06	Six Cylinders
4	2	Marine Application
4	3	Industrial Application
4	5	Generator Application
4	7	Automotive Application
5	W, S, E, L	11.1 L Displacement
5	G, T, M	12.7 L - Standard
5	P, B	12.7 L - Premium
5	F, H	14 L Displacement
6	T	DDEC I Engine Control
6	U	DDEC II Engine Control
6	K	DDEC III/IV Engine Control
7 & 8	28	1991 and later Coach
7 & 8	32	Underground Mining
7 & 8	40	Pre-1991 Engine
7 & 8	60	1991 and later On-Highway Truck

Table 3 Model Number Description for Series 60 Engine

For example, 6067-WK60 represents an 11.1 liter Series 60 engine that is controlled with DDEC III/IV electronics to be used in a 1991 or later truck.

Option labels attached to the valve rocker cover contain the engine serial and model numbers and list any optional equipment used on the engine. See Figure 10.

With any order for parts, the engine model number with serial number should be given. In addition, if a type number is shown on the option plate covering the equipment required, this number should also be included on the parts order.

(Rev. 2004) *All information subject to change without notice.*
6SE483 0401 Copyright © 2004 DETROIT DIESEL CORPORATION

All groups or parts used on a unit are standard for the engine model unless otherwise listed on the option plate.

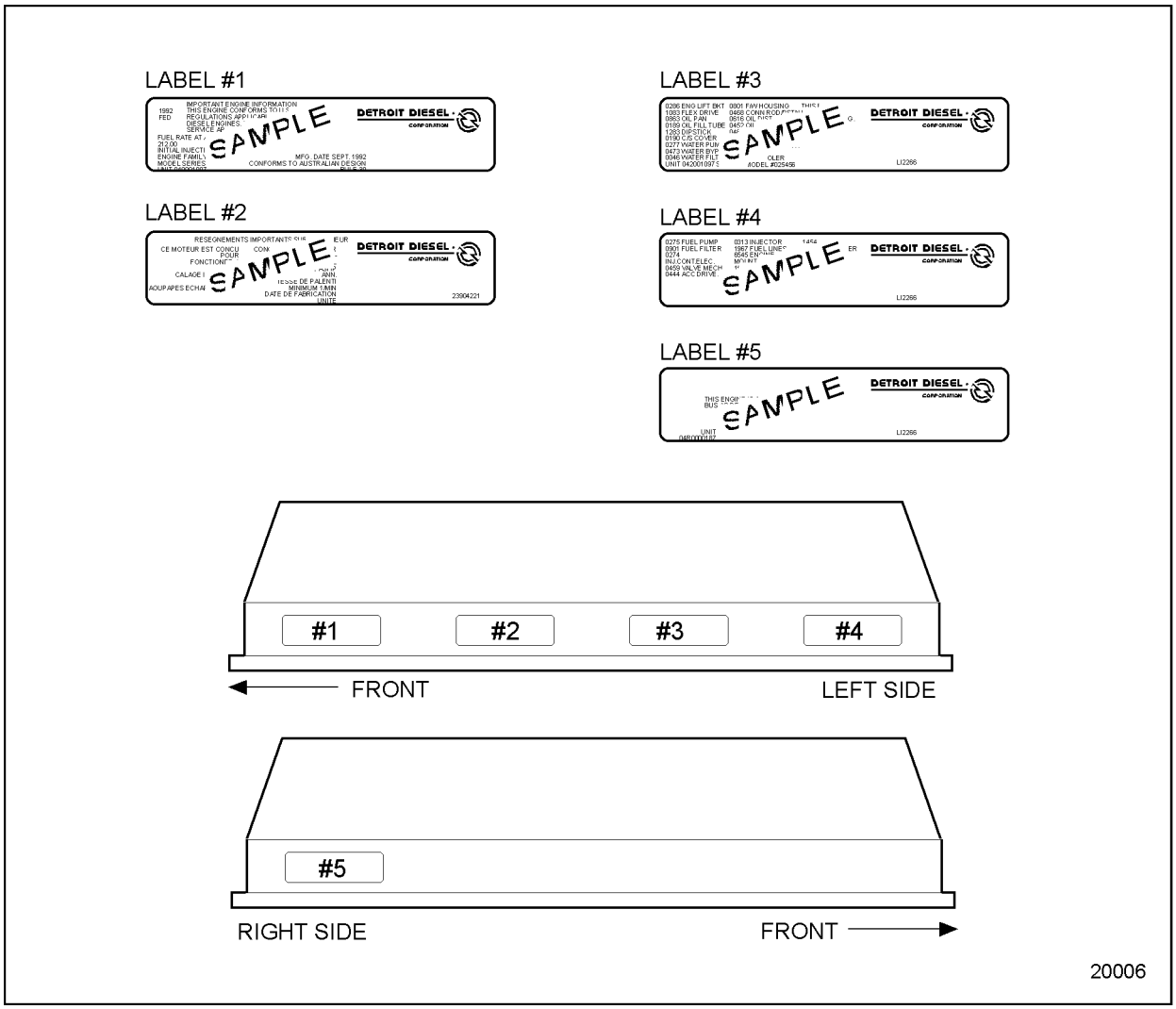

Figure 10 Rocker Cover with Option Label

 Copyright © 2004 DETROIT DIESEL CORPORATION

ENGINE MODEL, SERIAL NUMBER AND OPTION LABEL (SERIES 60G ENGINE)

The engine serial and model numbers are stamped on the cylinder block. See Figure 11. A guide to the meaning of the serial number digits is listed in Table 4.

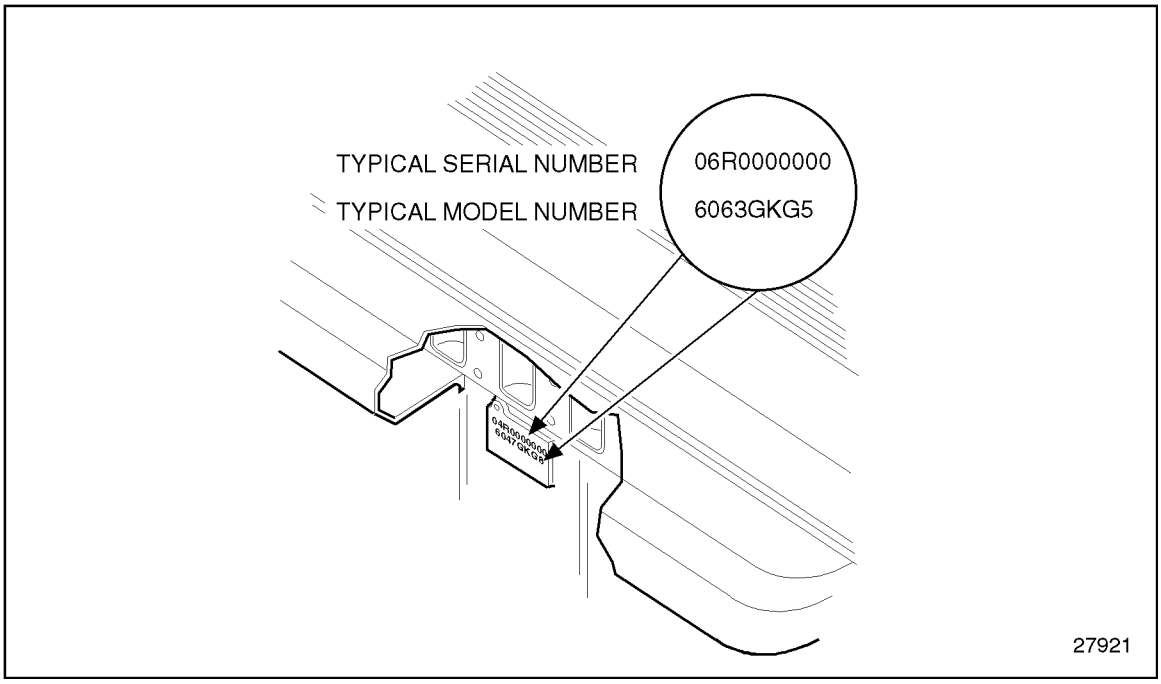

Figure 11 Location of Engine Serial and Model Number on Block (Series 60G Engine)

Digit	Value	Meaning
1	6	Series 60 Engine
2 & 3	06	Six Cylinders
4	3 / 7	Generator Application / Automotive
5	G / T	12.7 L Displacement
6	K	DDEC III / DDEC IV
7	G	Alternate Fuel Engine
8	5 / 8	Customer Designation

Table 4 Model Number Description for Series 60G Engine

(Rev. 2004) *All information subject to change without notice.*
6SE483 0401 Copyright © 2004 DETROIT DIESEL CORPORATION

REPLACING AND REPAIRING

In many cases, a technician is justified in replacing parts with new material rather than attempting repair. However, there are times when a slight amount of reworking or reconditioning may save a customer considerable added expense. Exchange assemblies such as injectors, fuel pumps, water pumps and turbochargers are desirable service items.

Various factors such as the type of operation of the engine, hours in service and the next overhaul period must be considered when determining whether new parts are installed or used parts are reconditioned to provide trouble-free operation.

For convenience and logical order in disassembly and assembly, the various subassemblies and other related parts mounted on the cylinder block will be treated as separate items in the various sections of the manual.

DISASSEMBLY

A technician can be severely injured if caught in pulleys, belts or the fan of an engine that is accidentally started. To avoid such a misfortune, take the following precautions before starting to work on an engine.

CAUTION:

To avoid injury from accidental engine startup while servicing the engine, disconnect/disable the starting system.

CAUTION:

To avoid injury from the sudden release of a high-pressure hose connection, wear a face shield or goggles. Bleed the air from the air starter system before disconnecting the air supply hose.

Before any major disassembly, the engine must be drained of lubricating oil, coolant and fuel.

To perform a major overhaul or other extensive repairs, the complete engine assembly, after removal from the engine base and drive mechanism, should be mounted on an engine overhaul stand; then the various subassemblies should be removed from the engine. When only a few items need replacement, it is not always necessary to mount the engine on an overhaul stand.

Parts removed from an individual engine should be kept together so they will be available for inspection and assembly. Those items having machined faces, which might be easily damaged by steel or concrete, should be stored on suitable wooden racks or blocks, or a parts dolly.

 Copyright © 2004 DETROIT DIESEL CORPORATION

CLEANING

Before removing any of the subassemblies from the engine (but after removal of the electrical equipment), the exterior of the engine should be thoroughly cleaned.

NOTICE:
The Series 60 engine is equipped with various sensors and other electronic components which may be damaged if subjected to the high temperatures in a solvent tank. Do not immerse any electrical components in a solvent tank. Care should be taken to ensure that all electronic components are removed from the various engine assemblies before they are immersed in a solvent tank. Refer to section 8for a description of these components.

Then, after each subassembly is removed and disassembled, the individual parts should be cleaned. Thorough cleaning of each part is absolutely necessary before it can be satisfactorily inspected. Various items of equipment needed for general cleaning are listed below.

The cleaning procedure used for all ordinary cast iron parts is the same as the following cylinder block cleaning procedure. Any special cleaning procedures will be mentioned when required.

Remove cylinder liners before putting the block in cleaning or descaling baths, to avoid trapping cleaning agents in block liner seating bores.

After stripping and before removing the cylinder block from the overhaul stand for cleaning and inspection, install the two metric eye bolts into head bolt holes at each end of the cylinder block.

Remove all oil and water gallery and weep hole plugs to allow the cleaning solution to enter the inside of the oil and water passages.

1. Using two metric eye bolts installed in the head bolt holes at opposite ends of the block, and with a suitable lifting device and spreader bar, immerse and agitate the block in a hot bath of a commercial, heavy-duty alkaline solution.
2. Wash the block in hot water or steam clean it to remove the alkaline solution.
3. If the water jackets are heavily scaled, proceed as follows:
   - [a] Agitate the block in a bath of inhibited phosphoric acid.
   - [b] Allow the block to remain in the acid bath until the bubbling action stops (approximately 30 minutes).
   - [c] Lift the block, drain it and immerse it again in the same acid solution for 10 more minutes. Repeat until all scale is removed from the water jacket area.
   - [d] Rinse the block in clear, hot water to remove the acid solution.
   - [e] Neutralize the acid that may cling to the casting by immersing the block in an alkaline bath.
   - [f] Wash the block in clean water or steam clean it.

(Rev. 2004) *All information subject to change without notice.*
6SE483 0401 Copyright © 2004 DETROIT DIESEL CORPORATION

CAUTION:

To avoid injury from flying debris when using compressed air, wear adequate eye protection (face shield or safety goggles) and do not exceed 40 psi (276 kPa) air pressure.

4. Dry the cylinder block with compressed air.

CAUTION:

To avoid injury from flying debris when using compressed air, wear adequate eye protection (face shield or safety goggles) and do not exceed 40 psi (276 kPa) air pressure.

5. Blow out all of the bolt holes and passages with compressed air.

NOTE:
The above cleaning procedure may be used on all ordinary cast iron and steel parts for the engine. Aluminum parts, such as flywheel housing, air intake manifold, oil filter adaptor and the camshaft gear access cover should NOT be cleaned in this manner. Mention will be made of special procedures when necessary.

6. Be certain that all water passages and oil galleries have been thoroughly cleaned. After the cylinder block has been thoroughly cleaned and dried, install weep hole plugs and precoated pipe plugs. Install new cup plugs using a coating of good grade non-hardening sealant such as Loctite® 620 or equivalent.

Loctite® is a registered trademark of The Loctite Corporation.

Steam Cleaning

A steam cleaner is a necessary item in a large shop and is useful for removing heavy accumulations of grease and dirt from the exterior of the engine and its subassemblies.

Solvent Tank Cleaner

Chlorinated solvents such as 1,1,1 trichloroethane have been identified by the EPA (Environmental Protection Agency) as possessing ozone-depleting properties. Special procedures have been developed for the handling and proper disposal of these chemicals. For environmental considerations, Detroit Diesel has replaced 1,1,1 trichloroethane with Tech Solv 340 branded solvent.

 Copyright © 2004 DETROIT DIESEL CORPORATION

Tech Solv 340 is a petroleum-based solvent that contains no chlorinated or fluorinated compounds, has a controlled evaporation rate, leaves no residue, is odorless, has a high flash point, and provides outstanding cleaning. To enhance its cleaning and drying properties, it may be heated to 52°C (125°F). Spills can be cleaned up with commercially available oil absorbents, and conventional waste treatment methods for petroleum-based products can be used when disposing of this product.

Detroit Diesel believes that a prudent environmental approach to the use of 1,1,1 trichloroethane should be taken. Therefore, Detroit Diesel recommends replacing 1,1,1 trichloroethane with Tech Solv 340 branded solvent wherever the former solvent was used.

Tech Solv 340 is manufactured by and available from the following supplier:

Chemical Technologies, Inc.

1610 Clara Street

Jackson, MI 49203

Telephone: 800-688-8262

FAX: 517-782-2448

We believe this source and their Tech Solv 340 solvent to be reliable. There may be other manufacturers of solvents that replace 1,1,1 trichloroethane. Detroit Diesel does not endorse, indicate any preference for, or assume any responsibility for the solvents from these firms or for any such products that may be available from other sources.

Solvent Tank Cleaning

A tank of sufficient size to accommodate the largest part that will require cleaning (usually the cylinder block) should be provided and provisions made for heating the cleaning solution.

CAUTION:

To avoid injury, wear a face shield or goggles.

Fill the tank with a commercial heavy-duty solvent, such as Tech Solv 340, that is heated to 52°C (125°F). Lower large parts directly into the tank with a hoist. Place small parts in a wire mesh basket and lower them into the tank. Immerse the parts long enough to loosen all of the grease and dirt.

Aluminum or plastic parts such as the flywheel housing, fuel pump drive, air intake manifold, oil filter adaptor, camshaft gear access cover, oil pan or rocker covers, should not be cleaned in this manner.

(Rev. 2004) *All information subject to change without notice.*
6SE483 0401 Copyright © 2004 DETROIT DIESEL CORPORATION

Rinsing Bath

Provide another tank of similar size containing hot water for rinsing the parts.

Drying

Parts may be dried with compressed air.

CAUTION:

To avoid injury from flying debris when using compressed air, wear adequate eye protection (face shield or safety goggles) and do not exceed 40 psi (276 kPa) air pressure.

The heat from the hot tanks will quite frequently complete drying of the parts without the use of compressed air.

Rust Preventive

If parts are not to be used immediately after cleaning, dip them in a suitable rust preventive compound. The rust preventive compound should be removed before installing the parts in an engine.

Gasket Eliminator Removal

The gasket eliminator used on numerous mating surface joints in the Series 60 engine results in a very thin film that must be removed from both surfaces prior to reassembly. As many of the surfaces are aluminum and/or dimensionally critical, conventional scraping methods, or the use of emery cloth for removing gasket eliminator is not recommended.

Four-inch, 3M Scotch-Brite® Surface Conditioning Discs, used with an electric or air powered hand drill (with a speed of 15,000-18,000 r/min), have proven successful in removing the gasket eliminator without damaging the mating surfaces of engine parts. See Figure 12.

Scotch-Brite® is a registered trademark of the 3M Corporation.

 Copyright © 2004 DETROIT DIESEL CORPORATION

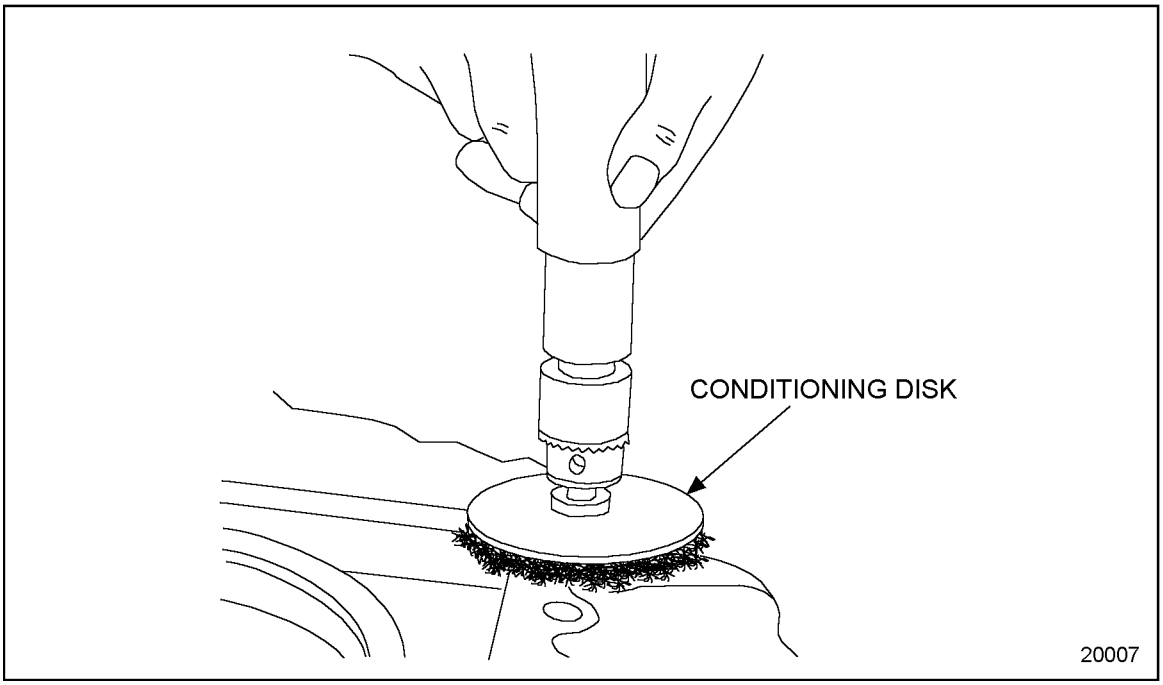

Figure 12 Gasket Eliminator Removal

A coarse pad, is suitable for steel surfaces. A medium pad is recommended for aluminum surfaces. The pads are easily interchangeable. See Figure 13.

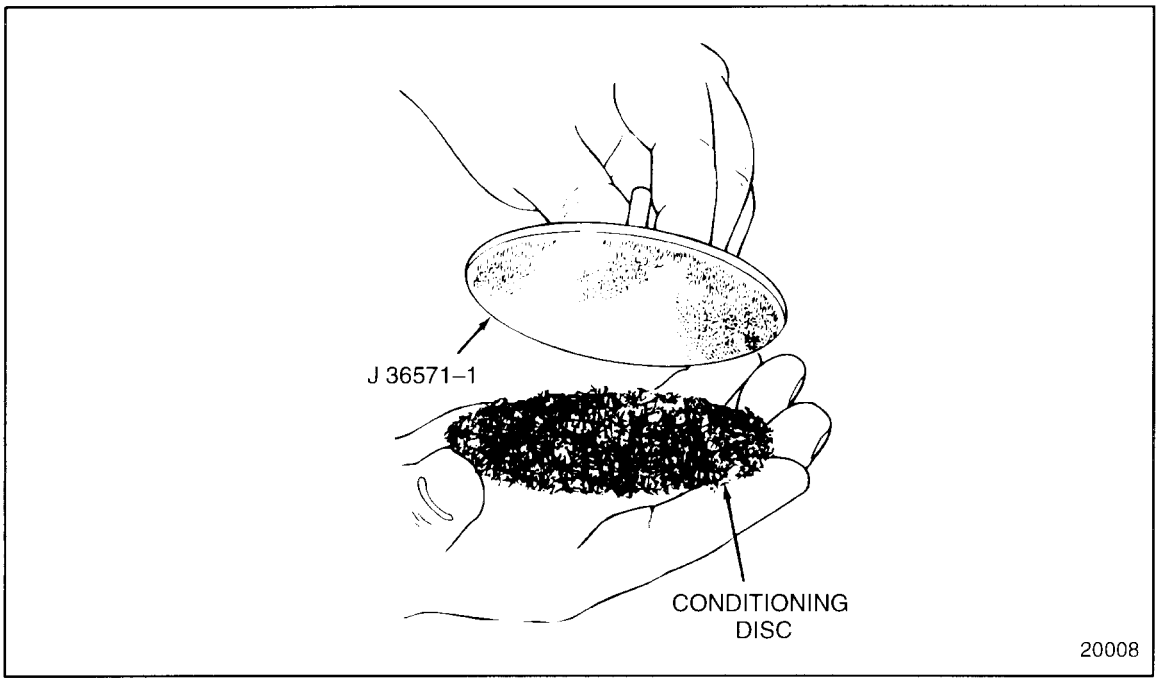

Figure 13 Scotch-Brite Surface Conditioning Disc Installation

(Rev. 2004) *All information subject to change without notice.*
6SE483 0401 Copyright © 2004 DETROIT DIESEL CORPORATION

Inspection

The purpose of parts inspection is to determine which parts can be used and which must be replaced. Although the engine overhaul specifications given throughout the text will aid in determining which parts should be replaced, considerable judgment must be exercised by the inspector. The guiding factors in determining the usability of worn parts, that are otherwise in good condition, is the clearance between the mating parts and the rate of wear on each of the parts. If it is determined that the rate of wear will maintain the clearances within the specified maximum allowable until the next overhaul period, the reinstallation of used parts may be justified. Rate of wear of a part is determined by dividing the amount the part has worn by the hours it has operated

Many service replacement parts are available in various undersize or oversize as well as standard sizes. Also, service kits for reconditioning certain parts and service sets that include all of the parts necessary to complete a particular repair job are available.

A complete discussion of the proper methods of precision measuring and inspection are outside the scope of this manual. However, every shop should be equipped with standard gages, such as dial bore gages, dial indicators, and inside and outside micrometers.

In addition to measuring the used parts after cleaning, the parts should be carefully inspected for cracks, scoring, chipping and other detrimental conditions.

 Copyright © 2004 DETROIT DIESEL CORPORATION

SAFETY PRECAUTIONS

The following safety measures are essential when working on the Series 60 engine.

Exhaust (Start/Run Engine)

Before starting and running an engine, adhere to the following safety precautions:

CAUTION:

To avoid injury before starting and running the engine, ensure the vehicle is parked on a level surface, parking brake is set, and the wheels are blocked.

CAUTION:

Diesel engine exhaust and some of its constituents are known to the State of California to cause cancer, birth defects, and other reproductive harm.

- ☐ **Always start and operate an engine in a well ventilated area.**
- ☐ **If operating an engine in an enclosed area, vent the exhaust to the outside.**
- ☐ **Do not modify or tamper with the exhaust system or emission control system.**

Stands

Safety stands are required in conjunction with hydraulic jacks or hoists. Do not rely on either the jack or the hoist to carry the load. When lifting an engine, ensure the lifting device is fastened securely. Ensure the item to be lifted does not exceed the capacity of the lifting device.

Glasses

Select appropriate safety glasses for the job. It is especially important to wear safety glasses when using tools such as hammers, chisels, pullers or punches.

CAUTION:

To avoid injury, wear a face shield or goggles.

(Rev. 2004) *All information subject to change without notice.*
6SE483 0401 Copyright © 2004 DETROIT DIESEL CORPORATION

Welding

Wear welding goggles and gloves when welding or using an acetylene torch.

 Copyright © 2004 DETROIT DIESEL CORPORATION

CAUTION:

To avoid injury from arc welding, gas welding, or cutting, wear required safety equipment such as an arc welder's face plate or gas welder's goggles, welding gloves, protective apron, long sleeve shirt, head protection, and safety shoes. Always perform welding or cutting operations in a well-ventilated area. The gas in oxygen/acetylene cylinders used in gas welding and cutting is under high pressure. If a cylinder should fall due to careless handling, the gage end could strike an obstruction and fracture, resulting in a gas leak leading to fire or an explosion. If a cylinder should fall resulting in the gage end breaking off, the sudden release of cylinder pressure will turn the cylinder into a dangerous projectile. Observe the following precautions when using oxygen/acetylene gas cylinders:

- ☐ **Always wear required safety shoes.**
- ☐ **Do not handle tanks in a careless manner or with greasy gloves or slippery hands.**
- ☐ **Use a chain, bracket, or other restraining device at all times to prevent gas cylinders from falling.**
- ☐ **Do not place gas cylinders on their sides, but stand them upright when in use.**
- ☐ **Do not drop, drag, roll, or strike a cylinder forcefully.**
- ☐ **Always close valves completely when finished welding or cutting.**

CAUTION:

To avoid injury from fire, check for fuel or oil leaks before welding or carrying an open flame near the engine.

NOTICE:

Use proper shielding around hydraulic lines when welding to prevent hydraulic line damage.

Ensure that a metal shield separates the acetylene and oxygen that must be chained to a cart.

(Rev. 2004) *All information subject to change without notice.*
6SE483 0401 Copyright © 2004 DETROIT DIESEL CORPORATION

Work Place

Organize your work area and keep it clean. A fall could result in a serious injury. Eliminate the possibility of a fall by:

- ☐ Wiping up oil spills
- ☐ Keeping tools and parts off the floor

After servicing or adjusting the engine:

- ☐ Reinstall all safety devices, guards or shields
- ☐ Ensure that all tools and servicing equipment are removed from the engine

Clothing

Safe work clothing fits and is in good repair. Work shoes are sturdy and rough-soled. Bare feet, sandals or sneakers are not acceptable foot wear when adjusting and/or servicing an engine. Do not wear the following when working on an engine:

⚠ CAUTION:

To avoid injury when working on or near an operating engine, wear protective clothing, eye protection, and hearing protection.

- ☐ Rings
- ☐ Wrist watches
- ☐ Loose fitting clothing

Any of these items could catch on moving parts causing serious injury.

Power Tools

Do not use defective portable power tools.

⚠ CAUTION:

To avoid injury from electrical shock, follow OEM furnished operating instructions prior to usage.

Check for frayed cords prior to using the tool. Be sure all electric tools are grounded. Defective electrical equipment can cause severe injury. Improper use of electrical equipment can cause severe injury.

 Copyright © 2004 DETROIT DIESEL CORPORATION

Air

Recommendations regarding the use of compressed air are indicated throughout the manual.

CAUTION:

To avoid injury from flying debris when using compressed air, wear adequate eye protection (face shield or safety goggles) and do not exceed 40 psi (276 kPa) air pressure.

Fuel Lines

Remove fuel lines as an assembly. Do not remove fuel lines individually. Avoid getting fuel injection lines mixed up.

Fluids and Pressure

Be extremely careful when dealing with fluids under pressure.

CAUTION:

To avoid injury from penetrating fluids, do not put your hands in front of fluid under pressure. Fluids under pressure can penetrate skin and clothing.

Fluids under pressure can have enough force to penetrate the skin. These fluids can infect a minor cut or opening in the skin. If injured by escaping fluid, see a doctor at once. Serious infection or reaction can result without immediate medical treatment.

(Rev. 2004) *All information subject to change without notice.*
6SE483 0401 Copyright © 2004 DETROIT DIESEL CORPORATION

Fuel

Keep the hose and nozzle or the funnel and container in contact with the metal of the fuel tank when refueling to avoid the possibility of an electric spark igniting the fuel.

CAUTION:

To avoid injury from fire caused by heated diesel-fuel vapors:

- ☐ **Keep those people who are not directly involved in servicing away from the engine.**
- ☐ **Stop the engine immediately if a fuel leak is detected.**
- ☐ **Do not allow open flames or smoke when working on an operating engine.**
- ☐ **Wear adequate protective clothing (face shield, insulated gloves and apron, etc.).**
- ☐ **To prevent a buildup of potentially volatile vapors, keep the engine area well ventilated during operation.**

Diesel fuel is relatively harmless at ambient temperatures.

CAUTION:

To avoid injury from possible fuel vapor ignition when refueling, keep the hose, nozzle, funnel, or container in contact with the metal opening of the fuel tank. This will reduce the likelihood of a dangerous spark.
This caution applies to gasoline engines.

The following cautions should be followed when filling a fuel tank:

 Copyright © 2004 DETROIT DIESEL CORPORATION

CAUTION:

To avoid injury from fire, do not overfill the fuel tank.

CAUTION:

To avoid injury from fire, keep all potential ignition sources away from diesel fuel, open flames, sparks, and electrical resistance heating elements. Do not smoke when refueling.

(Rev. 2004) *All information subject to change without notice.*
6SE483 0401 Copyright © 2004 DETROIT DIESEL CORPORATION

Batteries

Electrical storage batteries emit highly flammable hydrogen gas when charging and continue to do so for some time after receiving a steady charge.

CAUTION:

To avoid injury from battery explosion or contact with battery acid, work in a well-ventilated area, wear protective clothing, and avoid sparks or flames near the battery. Always establish correct polarity before connecting cables to the battery or battery circuit. If you come in contact with battery acid:

- ☐ **Flush your skin with water.**
- ☐ **Apply baking soda or lime to help neutralize the acid.**
- ☐ **Flush your eyes with water.**
- ☐ **Get medical attention immediately.**

Always disconnect the battery cable before working on the electrical system.

CAUTION:

To avoid injury from accidental engine startup while servicing the engine, disconnect/disable the starting system.

Disconnect the batteries or disable an air starter when working on the engine (except DDEC) to prevent accidental starting.

 Copyright © 2004 DETROIT DIESEL CORPORATION

Fire

Keep a charged fire extinguisher within reach. Be sure you have the correct type of extinguisher for the situation.

Cleaning Agent

Avoid the use of carbon tetrachloride as a cleaning agent because of the harmful vapors that it releases. Ensure the work area is adequately ventilated. Use protective gloves, goggles or face shield, and apron.

CAUTION:

To avoid injury from harmful vapors or skin contact, do not use carbon tetrachloride as a cleaning agent.

Exercise caution against burns when using oxalic acid to clean the cooling passages of the engine.

Working on a Running Engine

When working on an engine that is running, accidental contact with the hot exhaust manifold can cause severe burns.

CAUTION:

To avoid injury from unguarded rotating and moving engine components, check that all protective devices have been reinstalled after working on the engine.

CAUTION:

To avoid injury, use care when working around moving belts and rotating parts on the engine.

(Rev. 2004) *All information subject to change without notice.*
6SE483 0401 Copyright © 2004 DETROIT DIESEL CORPORATION

Start Attempts

Avoid excessive injection of ether into the engine during start attempts.

⚠ CAUTION:

To avoid injury from an explosion of natural gas, the following precautions must be taken:

- ☐ **Do not smoke when installing or servicing the engine or fuel system.**
- ☐ **Installation or servicing of natural-gas equipment must only be conducted in well-ventilated, natural gas compatible areas. Do not install or service equipment in an enclosed area where ignition sources are present without first ensuring that an undetected gas leak may be safely vented without being ignited.**
- ☐ **Bleed natural gas lines before installing or servicing any component connected to the fuel lines.**
- ☐ **Natural gas fuel systems are pressurized. Relieve pressure from any fuel system component prior to installation or service of that component.**
- ☐ **Use a combustible-gas detector. Liquefied natural gas (LNG) is odorless and cannot be detected by smell. Compressed Natural gas (CNG) may be odorless and may not be detected by smell.**
- ☐ **Equipment fuel systems are the responsibility of the Original Equipment Manufacturer (OEM). Equipment fuel system guidelines must be closely adhered to when installing or servicing equipment. Refer to OEM guidelines specifying which maintenance procedures require venting of fuel lines and fuel tanks.**
- ☐ **LNG systems are pressurized and contain extremely cold (-260°F [-162°C]) fluids. Contact the fuel supplier or OEM for LNG safety requirements. Contact with LNG may cause personal injury (freezing).**
- ☐ **Vent systems on the equipment should be ducted to a safe area whenever equipment is in an enclosed area.**

Natural gas is highly flammable and explosive and may be extremely cold (-260°F [-162°C]).

 Copyright © 2004 DETROIT DIESEL CORPORATION

NOTICE:
Avoid excessive injection of ether into the engine during start attempts. Injection of excessive ether may result in an uncontrolled internal engine explosion that could cause engine damage. Follow the manufacturer's instructions on proper product use.

Follow the instructions on the container or by the manufacturer of the starting aid.

(Rev. 2004) *All information subject to change without notice.*
6SE483 0401 Copyright © 2004 DETROIT DIESEL CORPORATION

Turbocharger Compressor Inlet Shield

A turbocharger compressor inlet shield, J 26554-A, is available and must be used anytime the engine is operated with the air inlet piping removed. See Figure 14. The shield helps to prevent foreign objects from entering and damaging the turbocharger and will prevent the mechanic from accidentally touching the turbocharger impeller. The use of this shield does NOT preclude any other safety practices contained in this manual. See Figure 15 for Series 60G engine.

CAUTION:

To avoid injury from contact with rotating parts when an engine is operating with the air inlet piping removed, install an air inlet screen shield over the turbocharger air inlet. The shield prevents contact with rotating parts.

Use of this shield does NOT preclude any other safety practices contained in this manual.

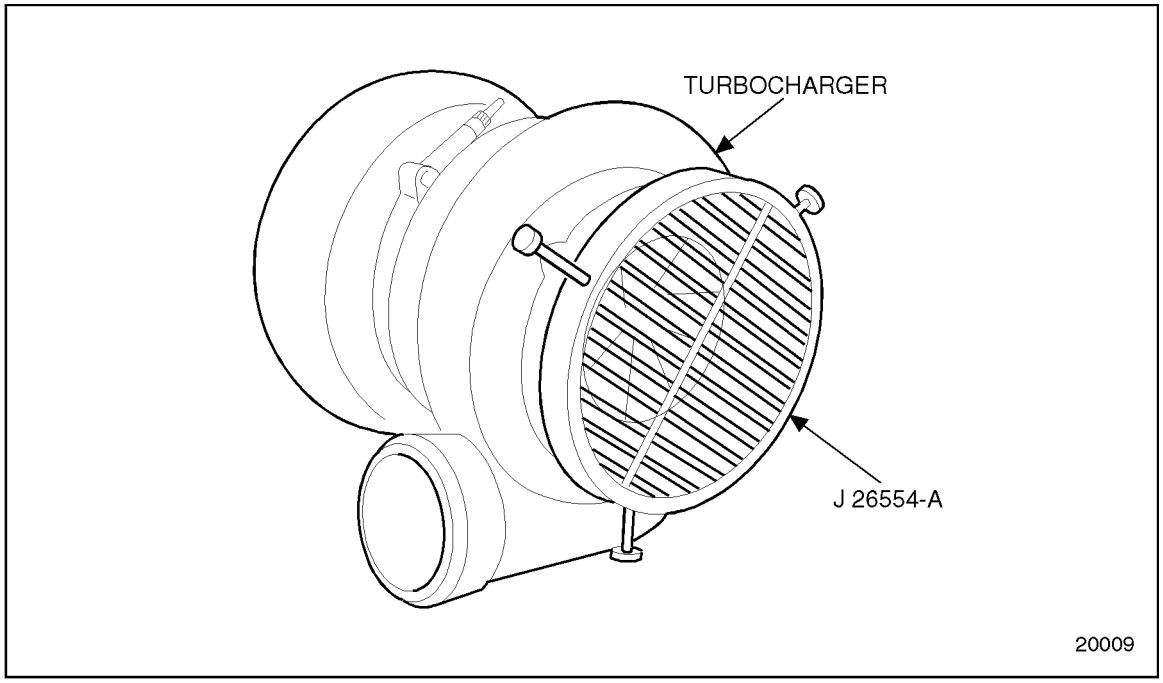

Figure 14 Turbocharger Compressor Inlet Shield

 Copyright © 2004 DETROIT DIESEL CORPORATION

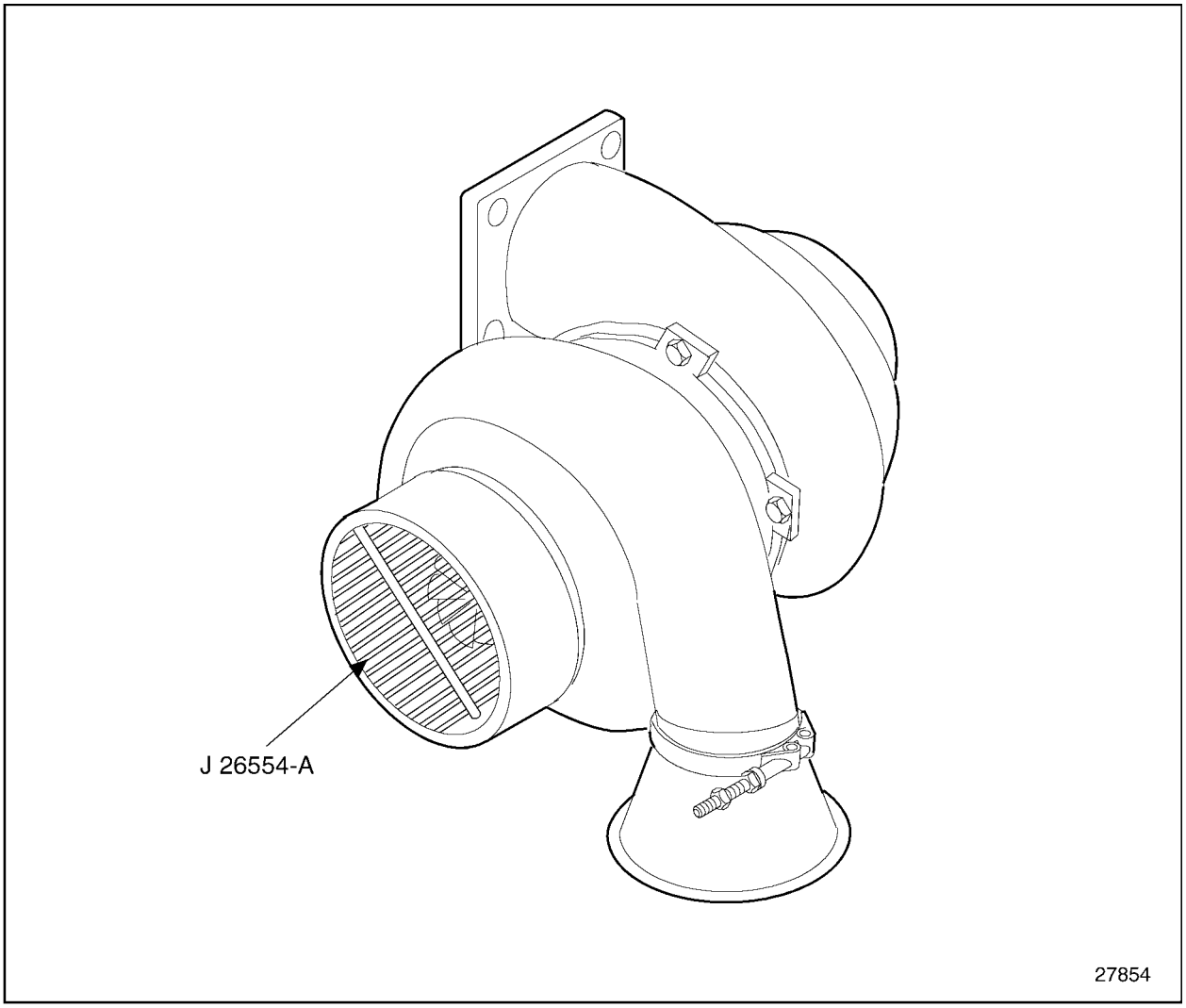

Figure 15 Turbocharger Compressor Inlet Shield, Series 60G Engine

(Rev. 2004) *All information subject to change without notice.*
6SE483 0401 Copyright © 2004 DETROIT DIESEL CORPORATION

FLUOROELASTOMER (VITON) CAUTION

Under normal design conditions, fluoroelastomer (VITON) parts, such as O-rings and seals, are perfectly safe to handle.

CAUTION:

To avoid injury from chemical burns, wear a face shield and neoprene or PVC gloves when handling fluoroelastomer O-rings or seals that have been degraded by excessive heat. Discard gloves after handling degraded fluoroelastomer parts.

However, a potential hazard may occur if these components are raised to a temperature above 316°C (600°F), such as during a cylinder failure or engine fire. At temperatures above 316°C (600°F) fluoroelastomer will decompose (indicated by charring or the appearance of a black, sticky mass) and produce hydrofluoric acid. This is extremely corrosive and, if touched by bare skin, may cause severe burns, sometimes with symptoms delayed for several hours.

 Copyright © 2004 DETROIT DIESEL CORPORATION

ENGINE VIEWS

The engine views show the pre-1991 engine and 1991 and later engine as well as DDEC II and DDEC III/IV. See Figure 16. For Series 60G engine views see Figure 17, see Figure 18and see Figure 19.

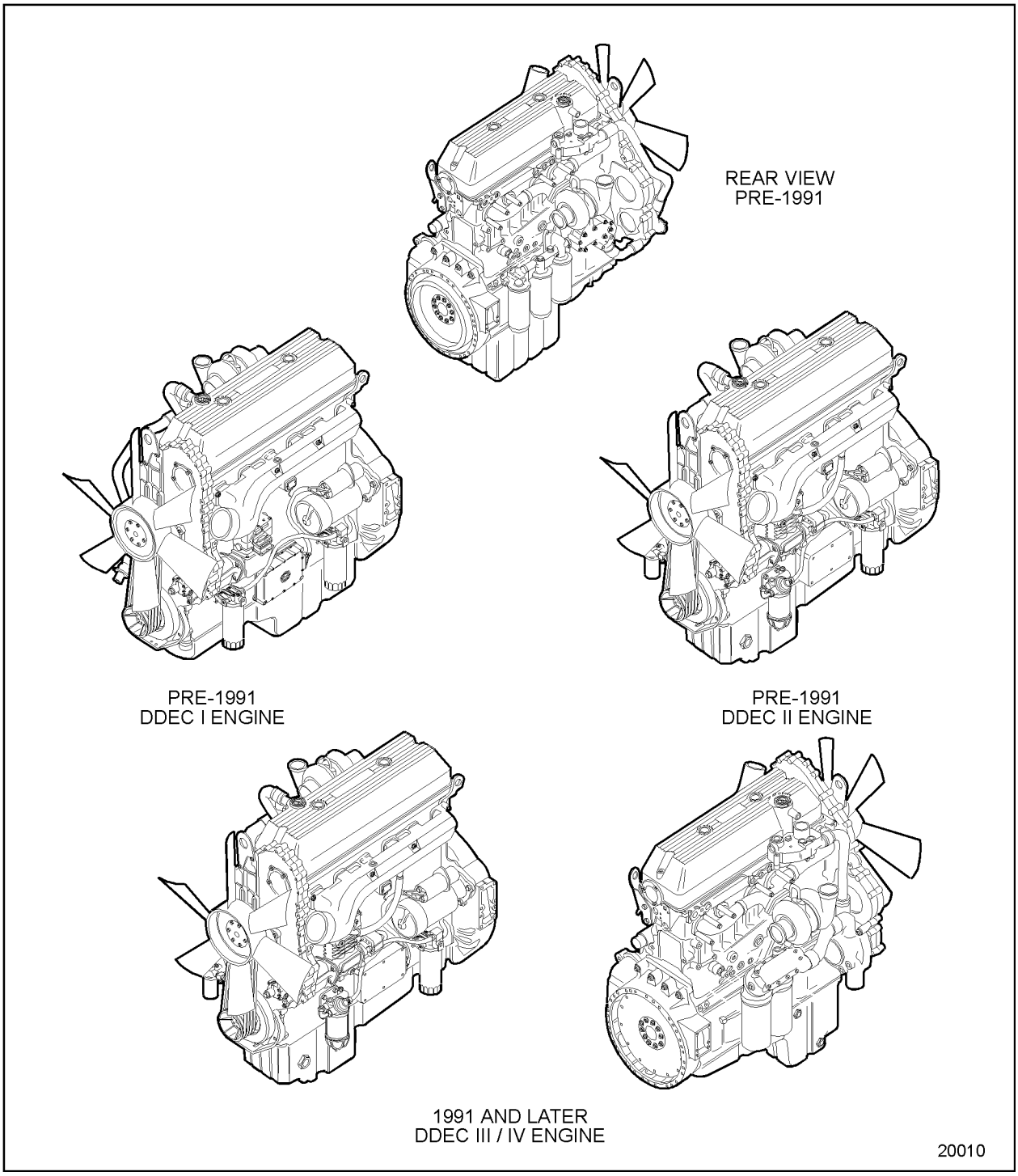

Figure 16 Engine Views

(Rev. 2004) *All information subject to change without notice.*
6SE483 0401 Copyright © 2004 DETROIT DIESEL CORPORATION

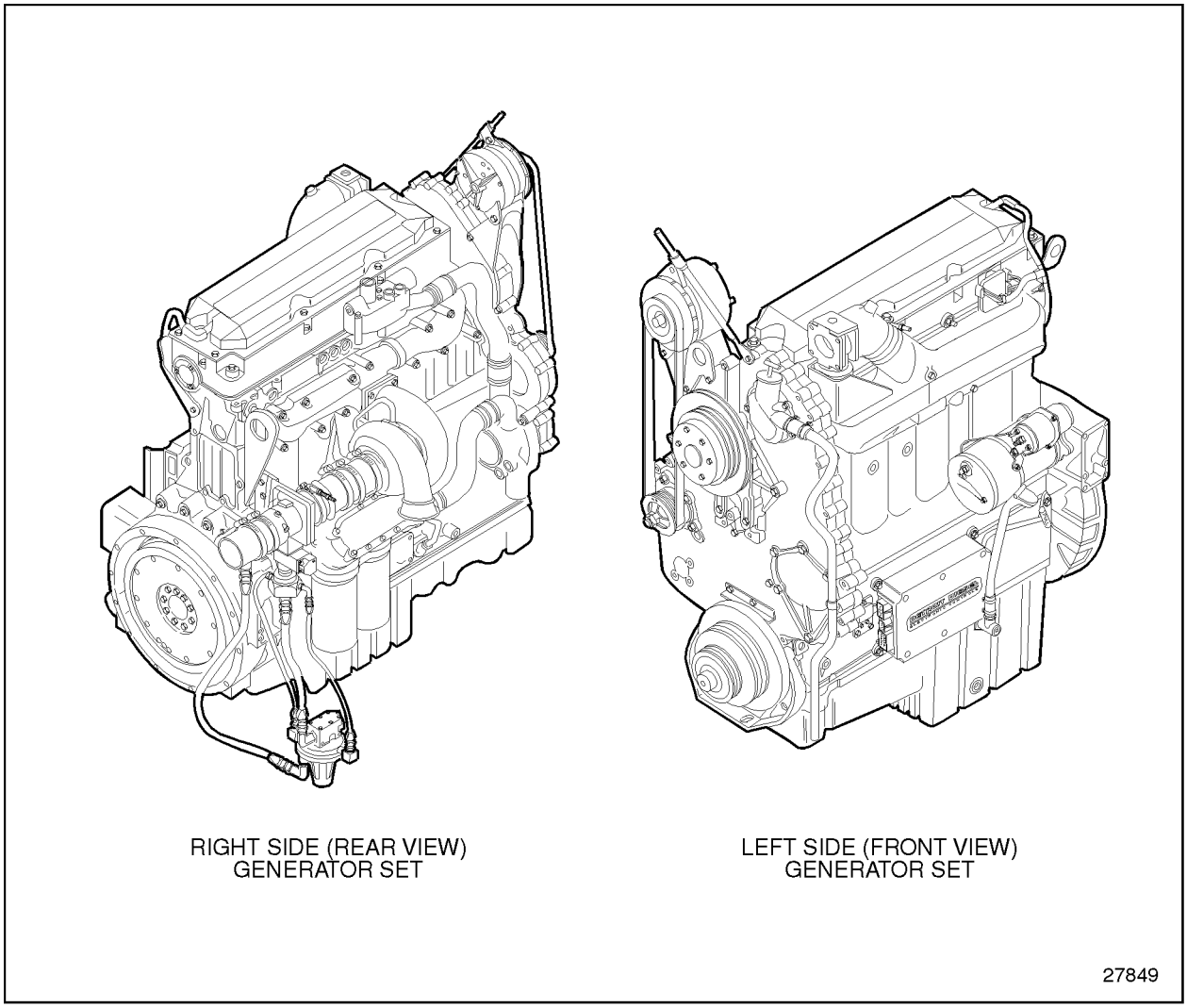

Figure 17 Engine Views (60G Genset Engine)

 Copyright © 2004 DETROIT DIESEL CORPORATION

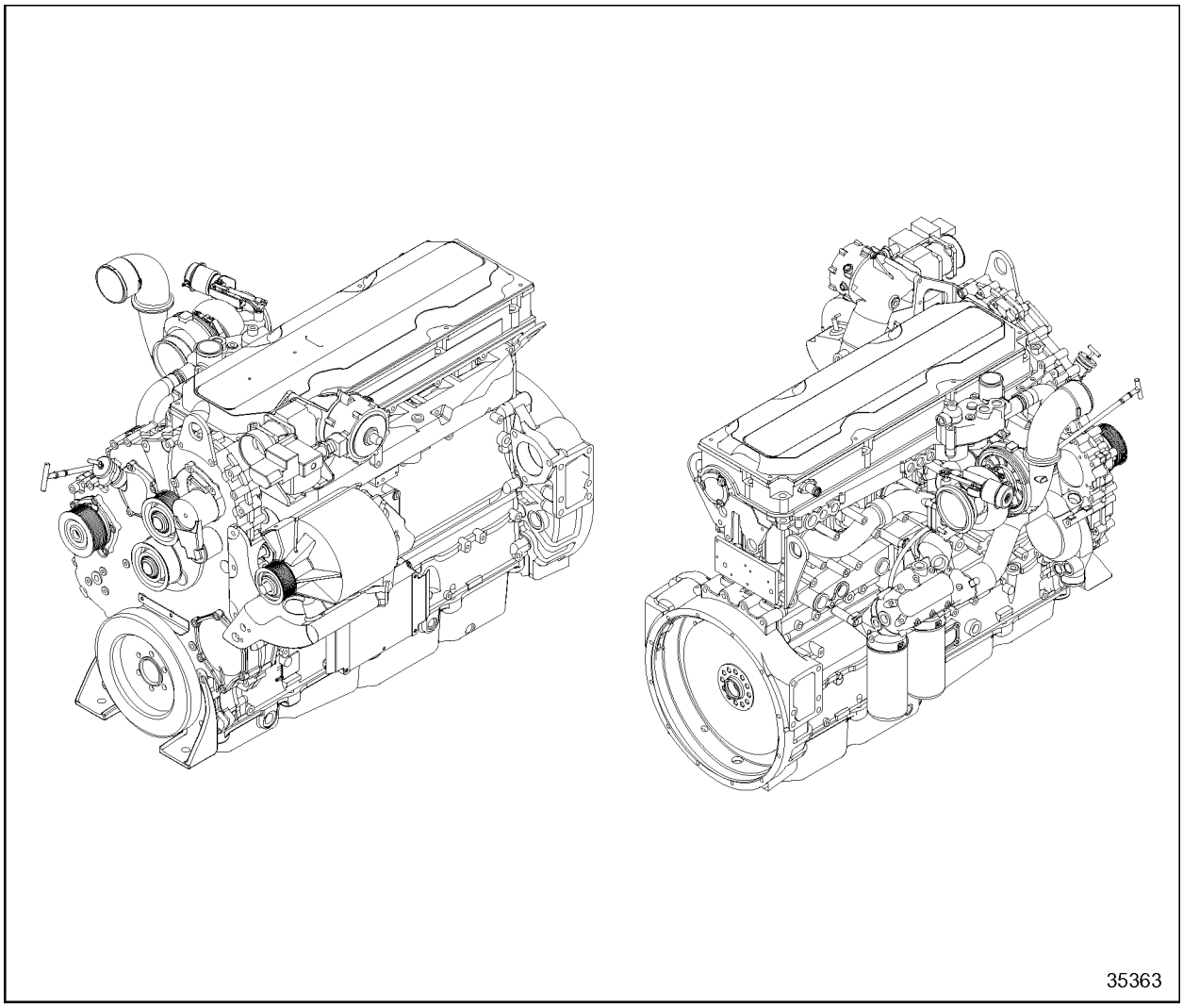

Figure 18 Engine Views (60G Automotive Engine)

(Rev. 2004) *All information subject to change without notice.*
6SE483 0401 Copyright © 2004 DETROIT DIESEL CORPORATION

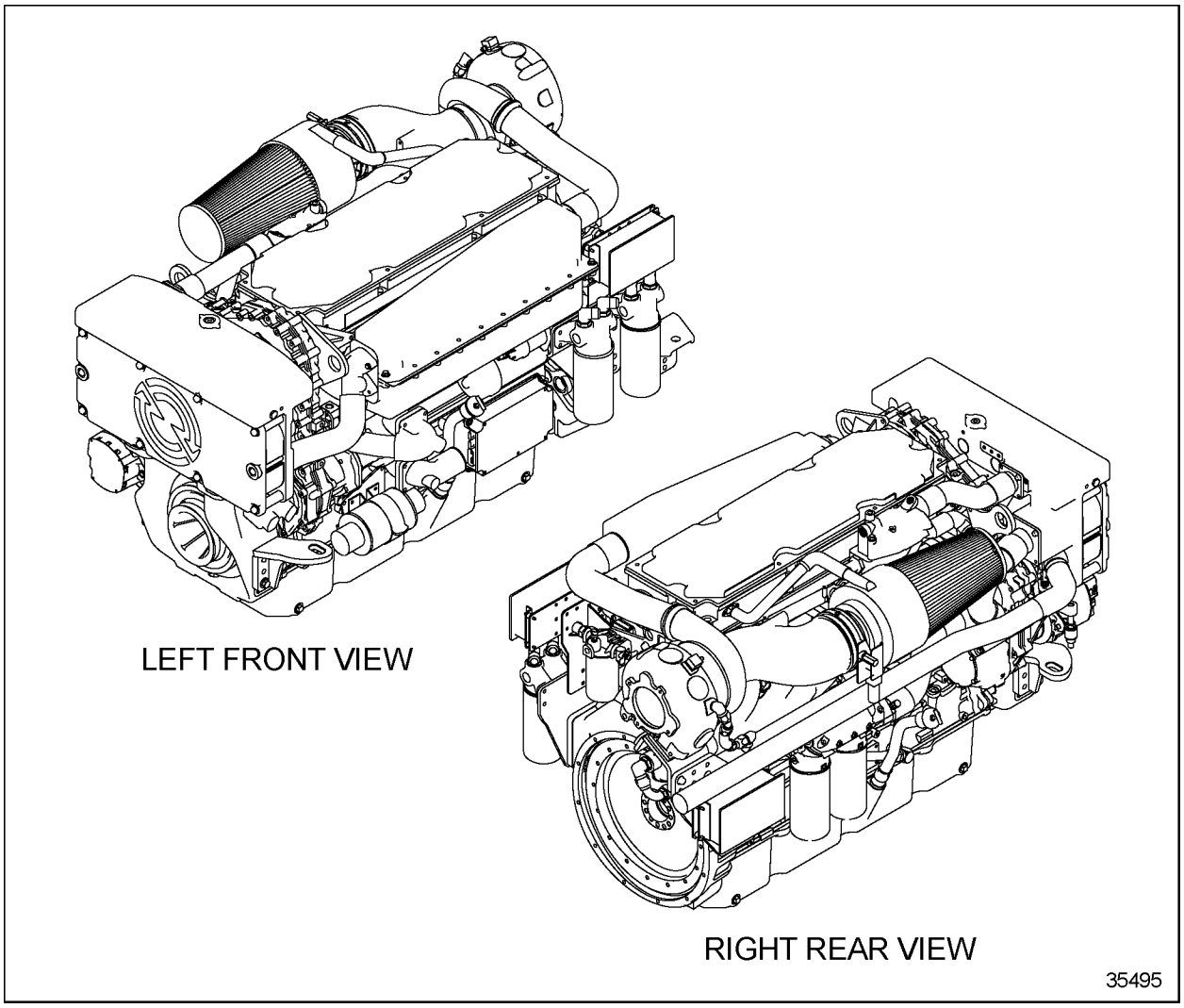

Figure 19 Engine Views (Heat-Exchanger-Cooled Marine Engine)

 Copyright © 2004 DETROIT DIESEL CORPORATION

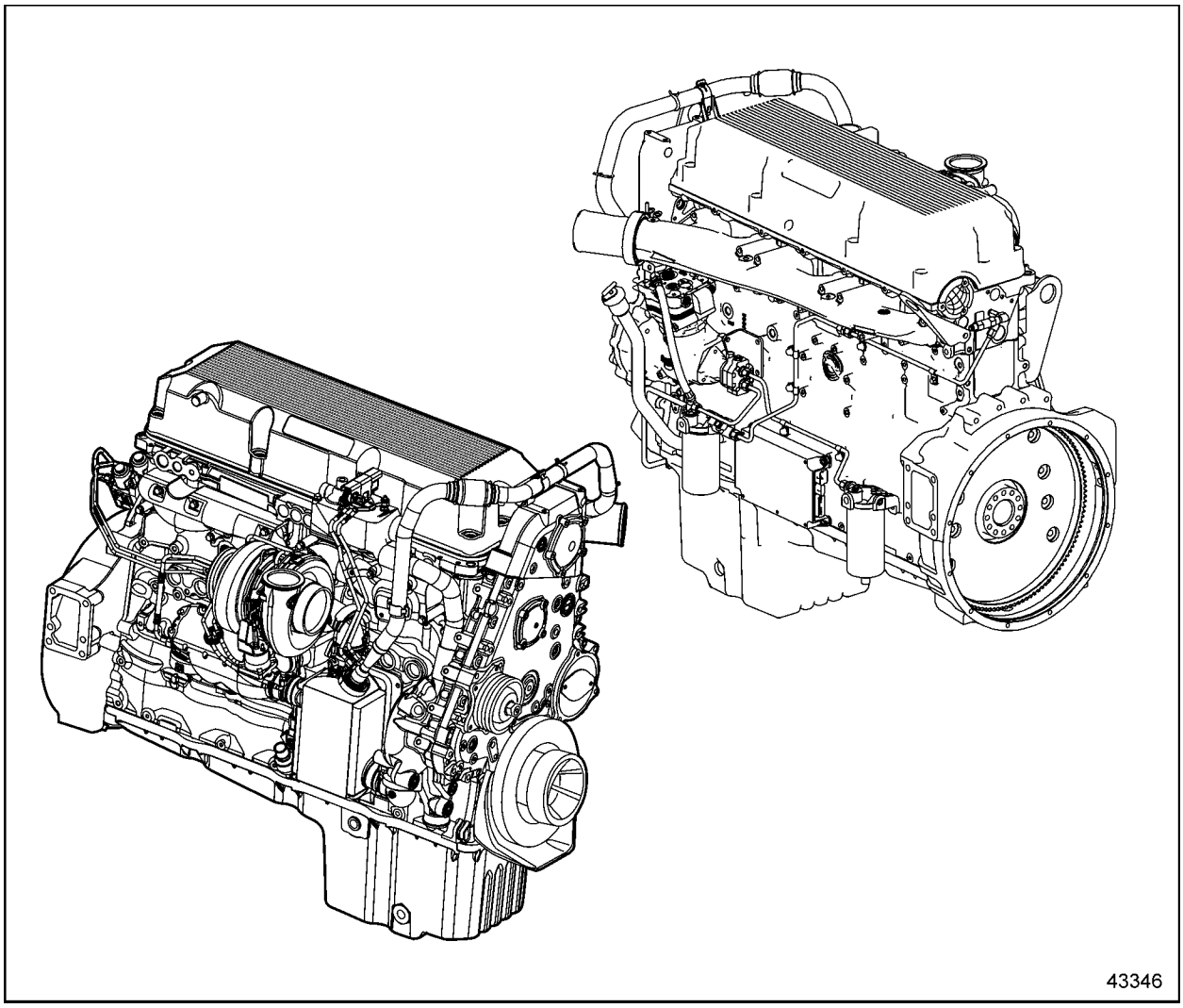

Figure 20 Engine Views Series 60 2002 Exhaust Gas Recirculation (EGR) Engine

(Rev. 2004) *All information subject to change without notice.*
6SE483 0401 Copyright © 2004 DETROIT DIESEL CORPORATION

ENGLISH TO METRIC CONVERSION

Listed in Table 5 are the English to metric conversions.

Multiply Length	By	To get equivalent number of:
Inch (in.)	25.4	Millimeters (mm)
Foot (ft)	0.3048	Meters (m)
Yard (yd)	0.9144	Meters (m)
Mile (mile)	1.609	Kilometers (km)
Multiply Area	**By**	**To get equivalent number of:**
Inch^2 (in.^{2})	645.2	Millimeters^2 (mm^2)
Inch^2 (in.^{2})	6.45	Centimeters^2 (cm^2)
Foot^2 (ft^2)	0.0929	Meters^2 (m^2)
Yard^2 (yd^2)	0.8361	Meters^2 (m^2)
Multiply Volume	**By**	**To get equivalent number of:**
Inch^3 (in.^{3})	16387	Millimeters^3 (mm^3)
Inch^3 (in.^{3})	16.387	Centimeters^3 (cm^3)
Inch^3 (in.^{3})	0.0164	Liters (L)
Quart (qt)	0.9464	Liters (L)
Gallon (gal)	3.785	Liters (L)
Yard^3 (yd^3)	0.7646	Meters^3 (m^3)
Multiply Mass	**By**	**To get equivalent number of:**
Pound (lb)	0.4536	Kilograms (kg)
Ton (ton)	907.18	Kilograms (kg)
Ton (ton)	0.907	Tonne (t)
Multiply Force	**By**	**To get equivalent number of:**
Kilogram (kg)	9.807	Newtons (N)
Ounce (oz)	0.2780	Newtons (N)
Pound (lb)	4.448	Newtons (N)
Multiply Temperature	**By**	**To get equivalent number of:**
Degree Fahrenheit (°F)	(°F-32) ÷ 1.8	Degree Celsius (°C)
Multiply Acceleration	**By**	**To get equivalent number of:**
Foot/second^2 (ft/sec^2)	0.3048	Meter/second^2 (m/s^2)
Inch/second^2 (in./sec^2)	0.0254	Meter/second^2 (m/s^2)
Multiply Torque	**By**	**To get equivalent number of:**
Pound-inch (lb·in.)	0.11298	Newton-meters (N·m)
Pound-foot (lb·ft)	1.3558	Newton-meters (N·m)
Multiply Power	**By**	**To get equivalent number of:**

 Copyright © 2004 DETROIT DIESEL CORPORATION

Multiply Length	By	To get equivalent number of:
Horsepower (hp)	0.746	Kilowatts (kW)
Multiply Power	**By**	**To get equivalent number of:**
Inches of water (in. H_2O)	0.2491	Kilopascals (kPa)
Pounds/square in. (lb/in.^{2})	6.895	Kilopascals (kPa)
Multiply Energy or Work	**By**	**To get equivalent number of:**
British Thermal Unit (Btu)	1055	Joules (J)
Foot-pound (ft·lb)	1.3558	Joules (J)
kilowatt-hour (kW·hr)	3,600,000. or 3.6×10^6	Joules (J = one W/s)
Multiply Light	**By**	**To get equivalent number of:**
Foot candle (fc)	10.764	Lumens/meter^2 (lm/m^2)
Multiply Fuel Performance	**By**	**To get equivalent number of:**
Miles/gal (mile/gal)	0.4251	Kilometers/liter (km/L)
Gallons/mile (gal/mile)	2.3527	Liter/kilometer (L/km)
Multiply Velocity	**By**	**To get equivalent number of:**
Miles/hour (mile/hr)	1.6093	Kilometers/hour (km/hr)

Table 5 English to Metric Conversion Table

DECIMAL AND METRIC EQUIVALENTS

Listed in Table 6 are the decimal and metric equivalents:

(Rev. 2004) *All information subject to change without notice.*
6SE483 0401 Copyright © 2004 DETROIT DIESEL CORPORATION

Fractions of an inch	Decimal (in.)	Metric (mm)	Fractions of an inch	Decimal (in.)	Metric (mm)
1/64	0.015625	0.39688	33/64	0.515625	13.09687
1/32	0.03125	0.79375	17/32	0.53125	13.49375
3/64	0.046875	1.19062	35/64	0.546875	13.89062
1/16	0.0625	1.58750	9/16	0.5625	14.28750
5/64	0.078125	1.98437	37/64	0.578125	14.68437
3/32	0.09375	2.38125	19/32	0.59375	15.08125
7/64	0.109375	2.77812	39/64	0.609375	15.47812
1/8	0.125	3.175	5/8	0.625	15.87500
9/64	0.140625	3.57187	41/64	0.640625	16.27187
5/32	0.15625	3.96875	21/32	0.65625	16.66875
11/64	0.171875	4.36562	43/64	0.671875	17.06562
3/16	0.1875	4.76250	11/16	0.6875	17.46250
13/64	0.203125	5.15937	45/64	0.703125	17.85937
7/32	0.21875	5.55625	23/32	0.71875	18.25625
15/64	0.234375	5.95312	47/64	0.734375	18.65312
1/4	0.250	6.35000	3/4	0.750	19.05000
17/64	0.265625	6.74687	49/64	0.765625	19.44687
9/32	0.28125	7.14375	25/32	0.78125	19.84375
19/64	0.296875	7.54062	51/64	0.796875	20.24062
5/16	0.3125	7.93750	13/16	0.8125	20.63750
21/64	0.328125	8.33437	53/64	0.828125	21.03437
11/32	0.34375	8.73125	27/32	0.84375	21.43125
23/64	0.359375	9.12812	55/64	0.859375	21.82812
3/8	0.375	9.52500	7/8	0.875	22.22500
25/64	0.390625	9.92187	57/64	0.890625	22.62187
13/32	0.40625	10.31875	29/32	0.90625	23.01875
27/64	0.421875	10.71562	59/64	0.921875	23.41562
7/16	0.4375	11.11250	15/16	0.9375	23.81250
29/64	0.453125	11.50937	61/64	0.953125	24.20937
15/32	0.46875	11.90625	31/32	0.96875	24.60625
31/64	0.484375	12.30312	63/64	0.984375	25.00312
1/2	0.500	12.70000	1	1.00	25.40000

Table 6 Conversion Chart-Customary and Metric Units

 Copyright © 2004 DETROIT DIESEL CORPORATION

SPECIFICATIONS

This section contains fastener torque specifications and pipe plug torque specifications.

Torque Specifications - Fasteners

The proper bolt and nut torque is dependent on its size. Standard (non-metric) nut and bolt torque specifications are listed in Table 7. The proper torque specifications for metric nuts and bolts are listed in Table 8.

Nut and Bolt Size, mm	280M or Better Torque, N·m	280M or Better Torque, lb·ft
No.10-24	5-7	4-5
1/4 in.-20	9-12	7-9
1/4 in.-28	11-14	8-10
5/16 in.-18	18-23	13-17
5/16 in.-24	20-26	15-19
3/8 in.-16	41-47	30-35
3/8 in.-24	47-53	35-39
7/16 in.-14	62-68	46-50
7/16 in.-20	77-83	57-61
1/2 in.-13	96-102	71-75
1/2 in.-20	112-126	83-93
9/16 in.-12	122-136	90-100
9/16 in.-18	145-159	107-117
5/8 in.-11	186-199	137-147
5/8 in.-18	228-241	168-178
3/4 in.-10	325-339	240-250
3/4 in.-16	393-407	290-300
7/8 in.-9	556-569	410-420
7/8 in.-14	644-657	475-485
1 in.-8	789-799	580-590
1 in.-14	928-942	685-695

Table 7 Standard (Non-metric) Fastener Torque Specifications

(Rev. 2004) *All information subject to change without notice.*
6SE483 0401 Copyright © 2004 DETROIT DIESEL CORPORATION

Nut and Bolt Size, mm	Property Class 10.9 Torque, N·m	Property Class 10.9 Torque, lb·ft
M6 X 1.0	13-16	10-12
M8 X 1.25	30-38	22-28
M10 X 1.5	58-73	43-54
M12 X 1.75	101-126	75-93
M14 X 2.0	160-200	118-148
M16 X 2.0	245-306	181-226
M20 X 2.5	478-598	353-441

Table 8 Class 10.9 Torque Specifications for Metric Fasteners

Torque Specification - Pipe Plugs

Standard pipe plug torque specifications supporting the Series 60 engine are listed in Table 9.

*Pipe Plug Size, NPTF	Torque Specifications, N·m	Torque Specifications, lb·ft
1/8 in.	14-18	10-13
1/4 in.	19-24	14-18
3/8 in.	24-31	18-23
1/2 in.	31-39	23-29
3/4 in.	45-56	33-41
1 in.	101-126	75-93
1-1/4 in.	129-161	95-119
1-1/2 in.	149-187	110-138

*Use sealant such as Pipe Plug Sealant with Teflon®, PT-7271 (Loctite® 592), or equivalent on all uncoated pipe plugs.

Table 9 Standard Pipe Plug Torque Specifications

 Copyright © 2004 DETROIT DIESEL CORPORATION

(Rev. 2004) *All information subject to change without notice.*
6SE483 0401 Copyright © 2004 DETROIT DIESEL CORPORATION

1 ENGINE

Section		Page
1.1	CYLINDER BLOCK AND CYLINDER LINER	1-3
1.2	CYLINDER HEAD	1-30
1.3	VALVE AND INJECTOR OPERATING MECHANISM	1-64
1.4	VALVES, SPRINGS, GUIDES, INSERTS, SEALS AND ROTATORS	1-86
1.5	ENGINE LIFTER BRACKETS	1-118
1.6	ROCKER COVER	1-126
1.7	CRANKSHAFT	1-148
1.8	CRANKSHAFT OIL SEALS	1-169
1.9	CRANKSHAFT MAIN BEARINGS	1-190
1.10	GEAR CASE COVER	1-203
1.11	GEAR CASE	1-237
1.12	CRANKSHAFT VIBRATION DAMPER	1-269
1.13	CRANKSHAFT PULLEY	1-278
1.14	FLYWHEEL	1-294
1.15	RING GEAR	1-304
1.16	FLYWHEEL HOUSING	1-306
1.17	PISTON AND PISTON RING	1-314
1.18	FORGED STEEL ONE PIECE PISTON ASSEMBLY AND PISTON RING	1-337
1.19	PISTON AND CONNECTING ROD ASSEMBLY	1-352
1.20	CONNECTING ROD	1-383
1.21	CYLINDER LINER	1-398

1.22 GEAR TRAIN AND ENGINE TIMING 1-413
1.23 THRUST PLATE PERIMETER SEAL 1-443
1.24 CAMSHAFT AND CAMSHAFT BEARING 1-458
1.25 CAMSHAFT DRIVE GEAR 1-510
1.26 ADJUSTABLE IDLER GEAR ASSEMBLY 1-524
1.27 BULL GEAR AND CAMSHAFT IDLER GEAR ASSEMBLY 1-535
1.28 CRANKSHAFT TIMING GEAR AND TIMING WHEEL 1-549
1.29 ACCESSORY DRIVE 1-570
1.30 JAKE BRAKE® 1-603
1.A ADDITIONAL INFORMATION 1-663

(Rev. 2004) *All information subject to change without notice.*
6SE483 0401 Copyright © 2004 DETROIT DIESEL CORPORATION

1.1 CYLINDER BLOCK AND CYLINDER LINER

The cylinder block is the basic engine structure, establishing and maintaining the alignment of all engine working parts. In the Series 60 Engine, the cylinder bores are not an integral part of the block casting, but are in the form of replaceable, wet type cylinder liners. See Figure 1-1.

Flanges at the liner upper ends seat in counterbores in the block deck, and project slightly above the deck to compress the head gasket for a good compression seal. Below the water jacket the lower end of the cylinder liner has two D-shaped seal rings and a lipped crevice seal to prevent leakage between the water jacket and crankcase.

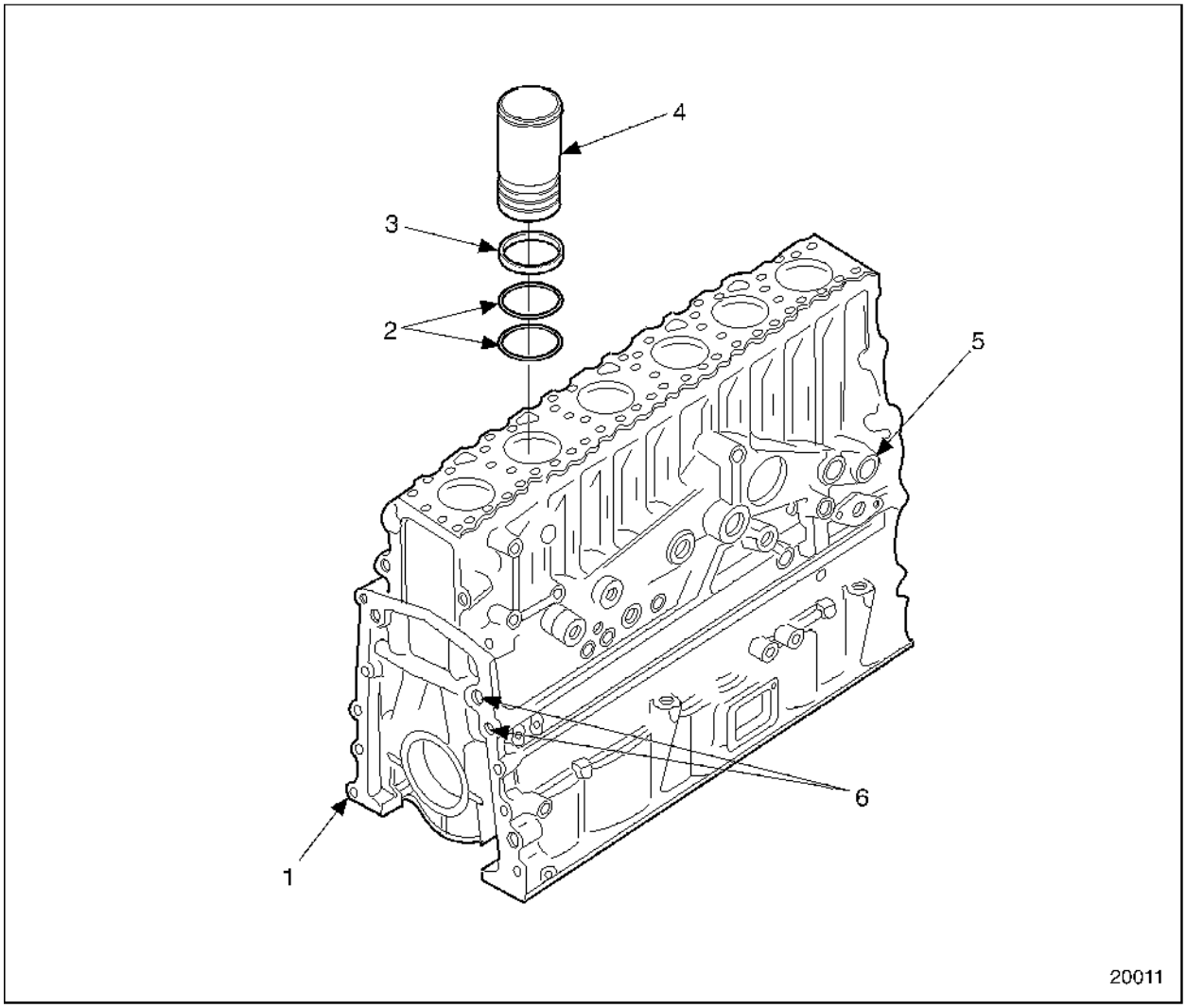

1. Cylinder Block
2. D-rings
3. Crevice Seal
4. Cylinder Liner
5. Integral Coolant Inlet Manifold
6. Oil Galleries

Figure 1-1 Series 60 Cylinder Block and Liner

 Copyright © 2004 DETROIT DIESEL CORPORATION

An integral coolant inlet manifold is cored into the right side of the block. It distributes the water pump output along the length of the block. Oil galleries are machined into the cooler side of the block. See Figure 1-1.

The integral oil galleries direct the oil pump output through the external oil cooler and filters, to the main oil gallery and to drilled passages in the crankcase webs which supply oil under pressure to each main bearing. In the crankcase, five integral webs plus front and rear bulkheads support the crankshaft in seven main bearings. See Figure 1-2.

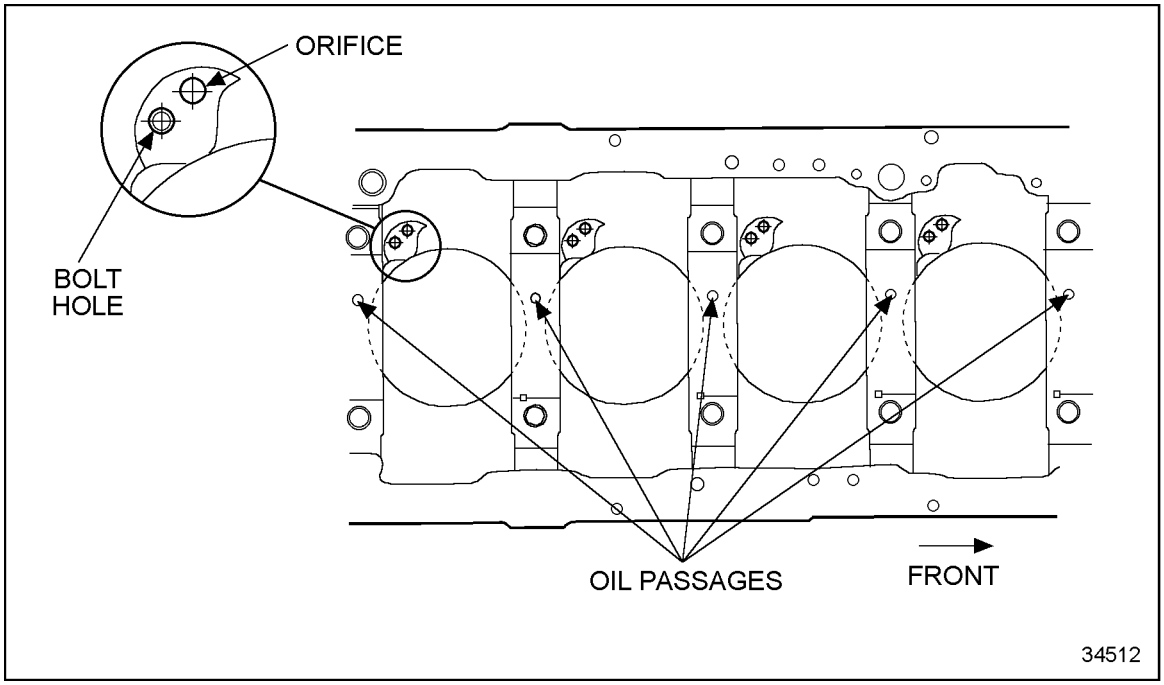

Figure 1-2 Series 60 Cylinder Block Crankcase

An improved cylinder block has replaced the former block on all Series 60 engines. This change took effect with unit serial number 6R210293, built November 30, 1994. The former cylinder block was used on engines built prior to this serial number.

The Series 60 cylinder block was further improved by the addition of a drilled lubrication orifice and bolt hole at the base of each cylinder bore. See Figure 1-2. The orifices are drilled into the main oil gallery and are required for installation of bolt-on oil spray nozzles used with forged steel pistons on premium engines. When blocks are used for non-premium engines with cast-iron pistons, the lubrication orifices are closed with bolt-on steel plates. First usage of the drilled block was on May 2, 1998, effective with engine serial number 6R408505.

(Rev. 2004) *All information subject to change without notice.*
6SE483 0401 Copyright © 2004 DETROIT DIESEL CORPORATION

The improved block permits installation of adaptorless Bendix and Midland air compressors onto the gear case. The improved block is similar to the former block, except that it has a slightly modified sidewall configuration that eliminates interference between the block and the adaptorless compressor. To compensate for the elimination of the adaptor, air compressor mounting bracket bolt holes have been moved forward 130.3 mm (5.13 in.) on the block. See Figure 1-3. Since these holes have a different spacing than the former holes, an improved compressor mounting bracket is required. A new air compressor coolant supply port has also been added forward of the former supply port. The former port is plugged when the adaptorless compressor is installed.

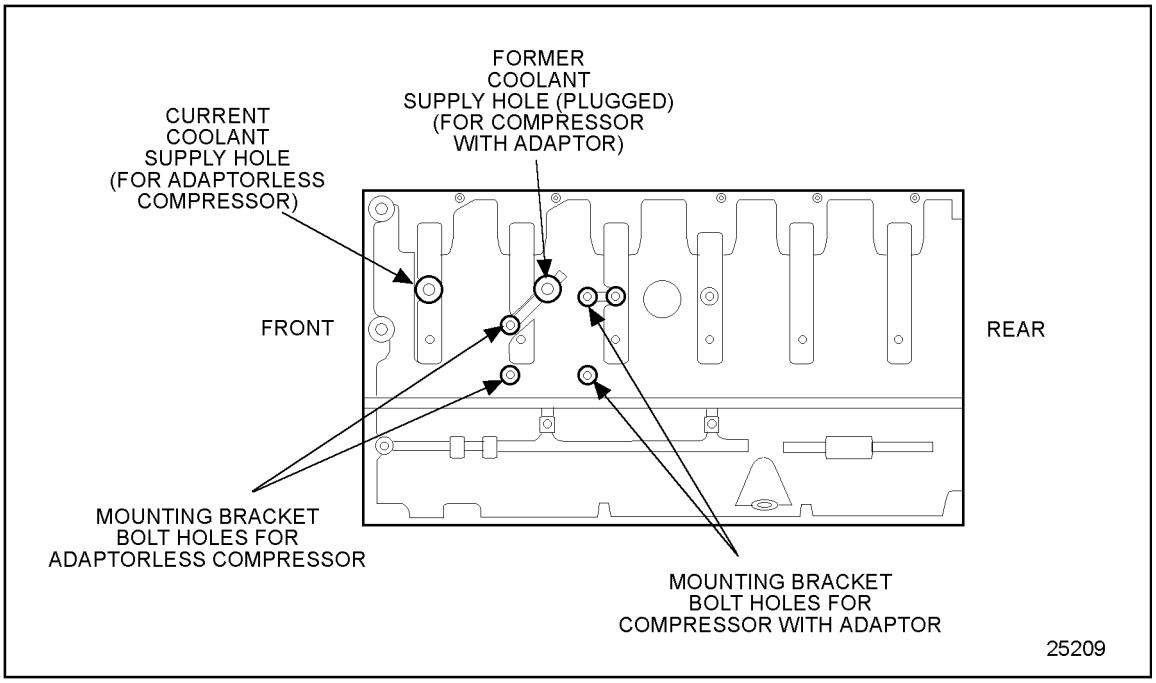

Figure 1-3 Cylinder Block Showing Current Modifications

When replacing a former block with an improved block, it is recommended (but not necessary) that an adaptorless air compressor, improved compressor mounting bracket, and improved compressor coolant supply hose be installed. Refer to section 10.1.3, of this manual for information on installing the adaptorless air compressor.

 Copyright © 2004 DETROIT DIESEL CORPORATION

1.1.1 Repair or Replacement of Cylinder Block

To determine if repair is possible or replacement is necessary, perform the following procedure. See Figure 1-4.

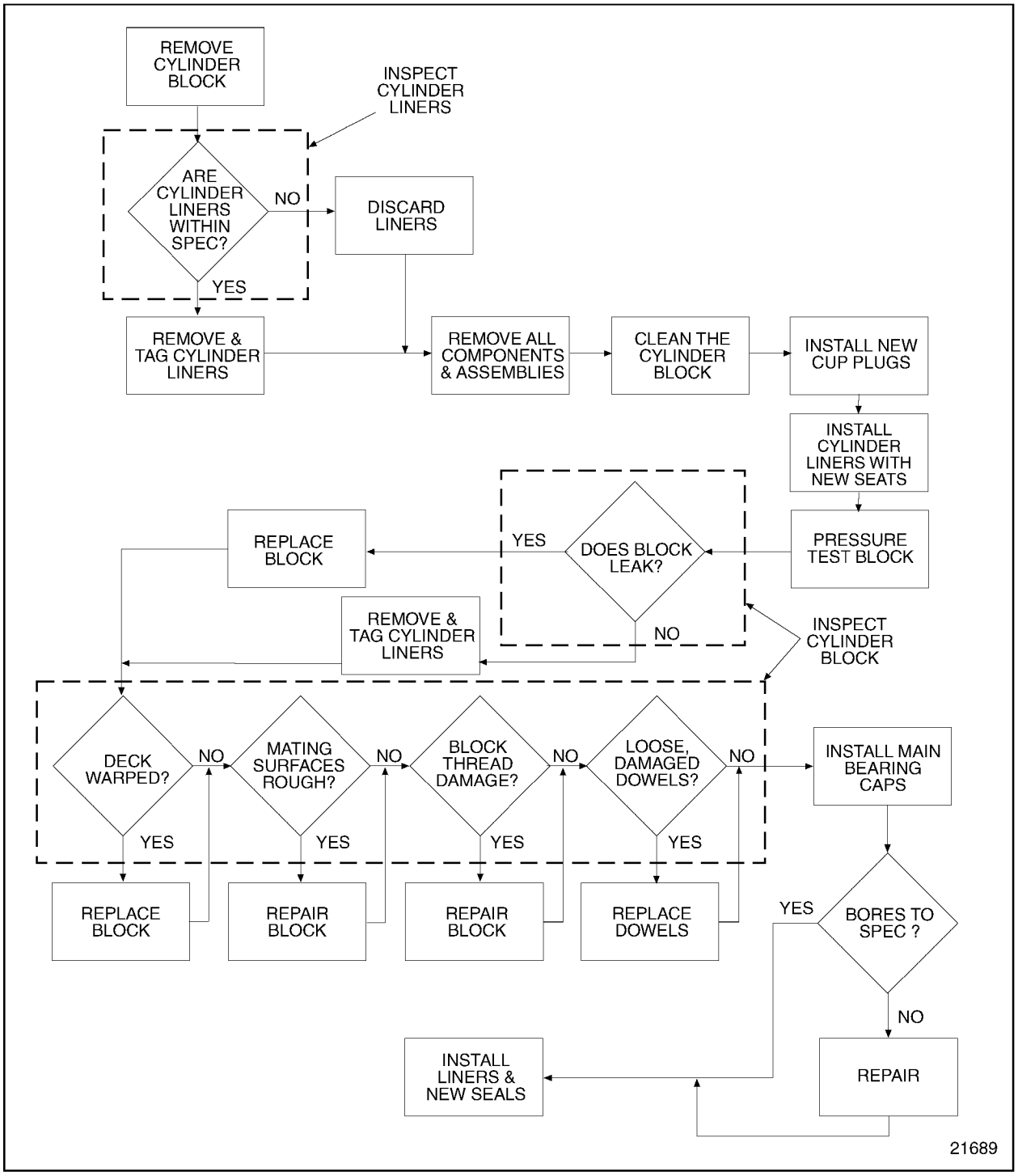

Figure 1-4 Flowchart for Repair or Replacement of Cylinder Block

(Rev. 2004) *All information subject to change without notice.*
6SE483 0401 Copyright © 2004 DETROIT DIESEL CORPORATION

1.1.2 Removal and Disassembly of Engine from the Vehicle or Vessel

Before mounting an engine on an overhaul stand, it must be disconnected from the transmission. Details for removing an engine will vary from one application to another. However, the following steps will be necessary, regardless of application:

1. Disconnect the battery cable(s) from the battery(s).
2. Drain the cooling system completely by removing the drain plug in the oil cooler and opening the drain cocks in the cylinder block, thermostat housing and water pump housing. Refer to section 13.13.4.

NOTE:
On marine engines, drain the heat exchanger, charge air cooler and water-cooled intake manifold, if installed.

3. Drain the lubricating oil. Refer to section 13.13.1.
4. Disconnect the inlet fuel line from the primary fuel filter and the outlet line from the upper fitting at the rear of the cylinder head. Refer to section 2.10.1.
5. Remove the air cleaner ducting as necessary for engine removal. Refer to OEM guidelines.
6. Remove the charge air cooler ducting from the turbocharger and intake manifold. Refer to section 6.10.2.
7. Disconnect the exhaust piping from the turbocharger. Refer to section 6.6.2.
8. Disconnect DDEC:
   [a] For DDEC I, disconnect the 22-pin DDEC electrical connector. Refer to section 2.21.2.
   [b] For DDEC II or III, disconnect the 30-pin DDEC vehicle electrical connector and the six-pin DDEC II power connector or DDEC III/IV five pin power connector. Refer to section 2.19.2, or refer to section 2.20.3.
9. Disconnect and remove the cranking motor. Refer to section 8.4.2.
10. Remove the alternator and other electrical equipment, as necessary. Refer to section 8.2.2.
11. Remove the air compressor and any air lines, as necessary. Refer to section 10.1.5.
12. Disconnect and remove the coolant hoses.
13. On marine engines, remove the raw water pump.Refer to section 4.4.2.
14. Remove the charge air cooler, radiator, fan guard and other cooling system related parts as necessary to remove the engine. Refer to section 6.10.2.

NOTE:
On certain keel cooled marine engines, remove the front-mounted charge air cooler and mounting, if installed. Refer to section 4.4.2.

 Copyright © 2004 DETROIT DIESEL CORPORATION

15. Connect a suitable lifting device to the engine using all three lifting brackets (two at the rear and one at the front).
16. Separate the engine from the transmission or marine gear.
17. Remove the engine mounting bolts.

⚠ CAUTION:

To avoid injury from a falling engine, an adequate lifting device with a spreader bar and sling should be used to lift the engine. The sling and spreader bar should be adjusted so the lifting hooks are vertical to prevent bending the lifter brackets. To ensure proper weight distribution, all provided lifter brackets must be used.

18. Lift the engine from its mounts using a suitable lifting device. See Figure 1-5.

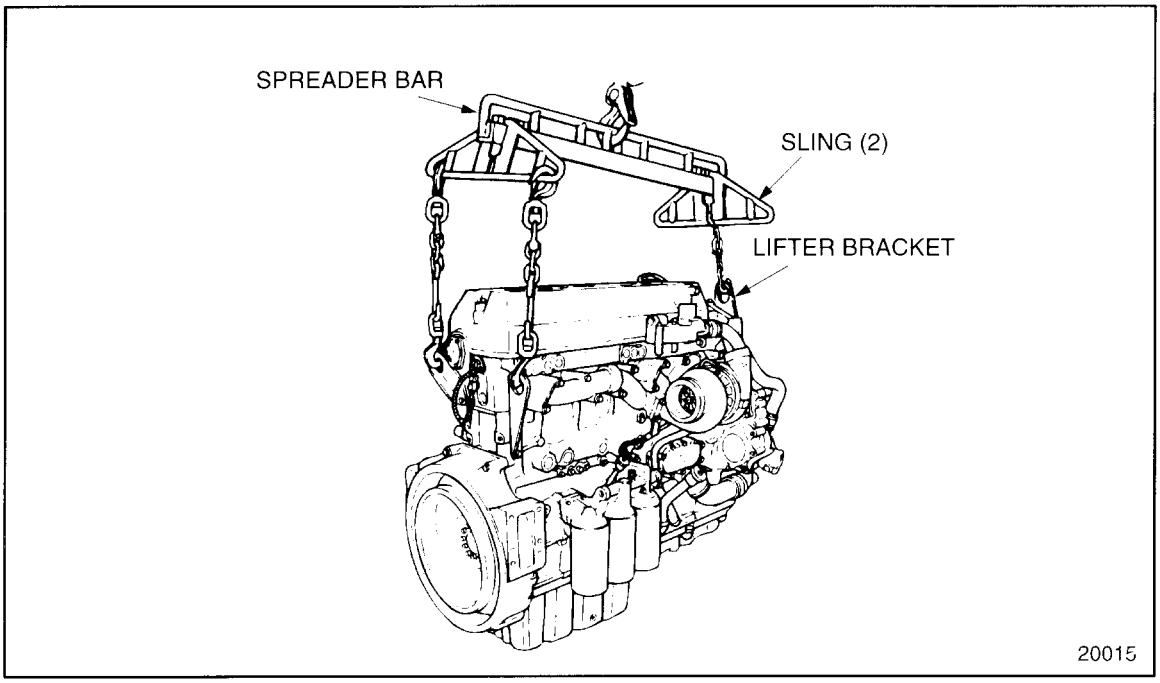

Figure 1-5 Lifting Engine

(Rev. 2004) *All information subject to change without notice.*
6SE483 0401 Copyright © 2004 DETROIT DIESEL CORPORATION

CAUTION:

To avoid injury from a falling engine, ensure the engine is securely attached to the engine overhaul stand before releasing the lifting sling.

19. Use engine overhaul stand, J 29109, with stand adaptor plate, J 35635-1 part of J 35635–A for support when stripping a Series 60 engine cylinder block. See Figure 1-6.

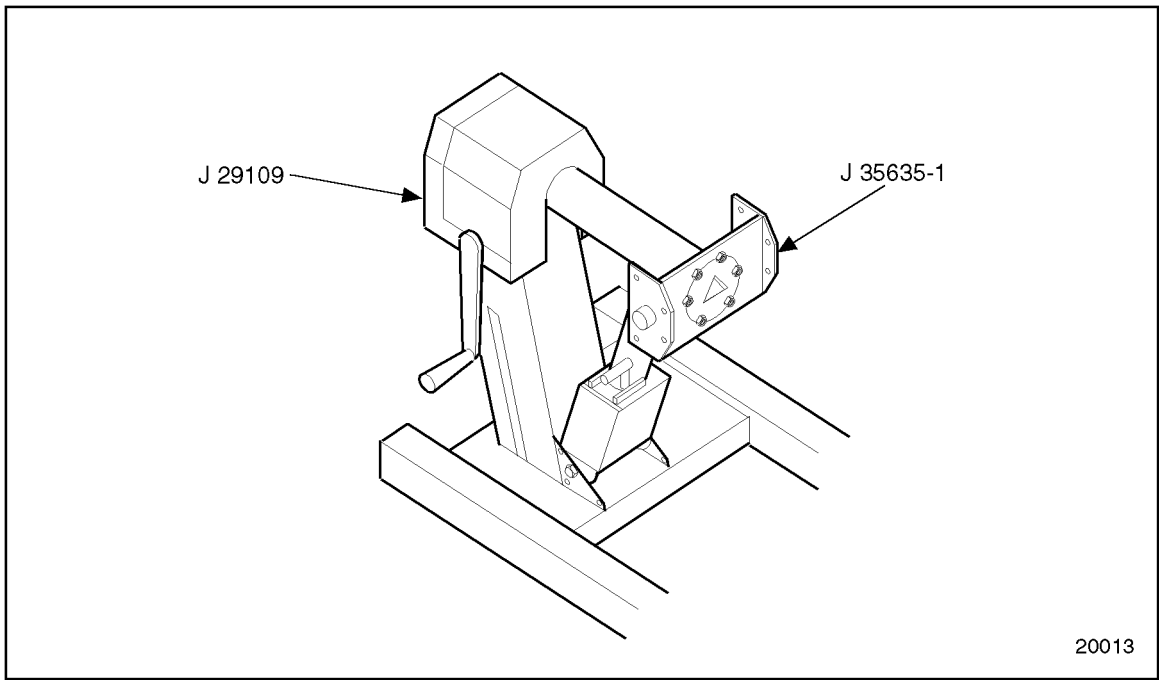

Figure 1-6 Engine Overhaul Stand and Adaptor

 Copyright © 2004 DETROIT DIESEL CORPORATION

20. Bolt cylinder block adaptor, J 35635-2 part of J 35635–A, to the cylinder block and mate it with the stand adaptor, J 35635-1 part of J 35635–A. See Figure 1-7.

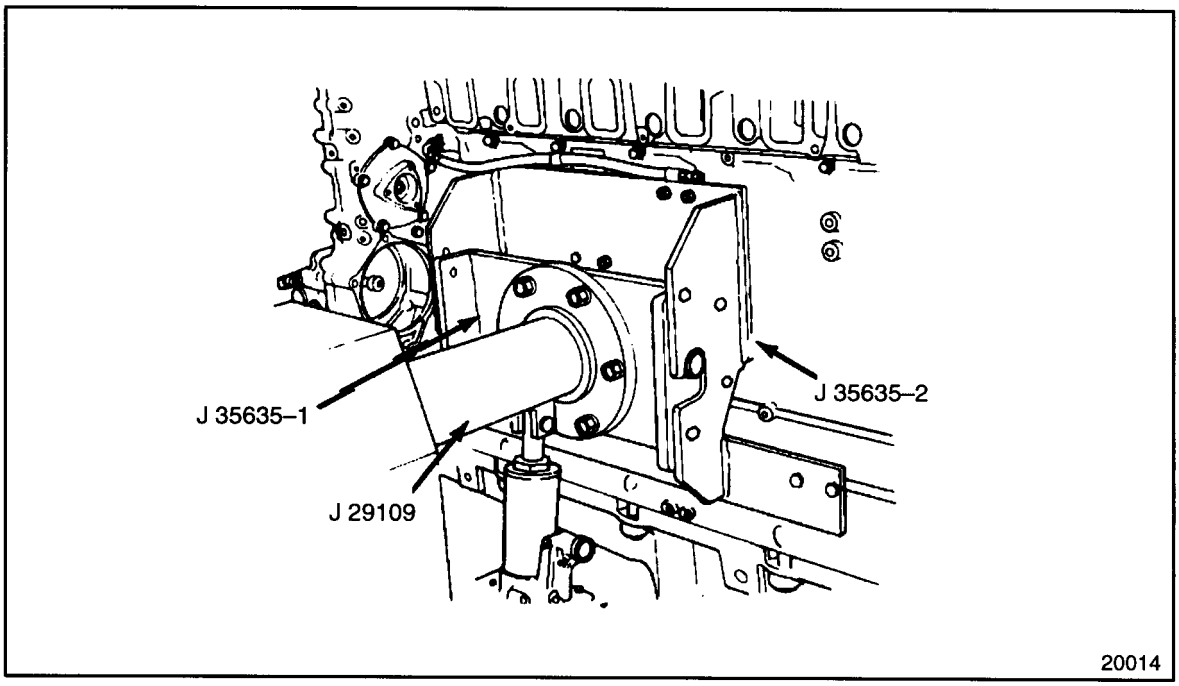

Figure 1-7 Cylinder Block Adaptor

21. The engine is left-side mounted in an upright position. Rotate it in either direction and lock it into position.
22. Remove the fuel filters and adaptor.
    [a] For DDEC I engines, remove the inlet and outlet fuel lines connected to the Electronic Distributor Unit (EDU) cold plate, the EDU mounting bolts, and the EDU. Refer to section 2.21.2.
    [b] For DDEC II engines, remove the inlet and outlet fuel lines connected to the Electronic Control Module (ECM) cold plate, the ECM mounting bolts, and the ECM. Refer to section 2.20.3.

NOTE:
DDC has discontinued the use of the ECM cold plate on all Series 60 automotive engine models, effective with unit serial number 06R0008950. In place of the ECM cold plate, a No. 6 x 37.92 in. (963 mm) long hose assembly (23504785) is now routed from the fuel pump discharge fitting to the inlet of the secondary fuel filter.

(Rev. 2004) *All information subject to change without notice.*
6SE483 0401 Copyright © 2004 DETROIT DIESEL CORPORATION

[c] Current DDEC III/IV Series 60 vehicle, industrial and generator set engines do not have a cold plate.

NOTE:
Series 60 marine engines DO have a cold plate.

23. Disconnect the harness connector (gray) from the timing reference sensor (TRS) at the lower left corner of the gear case. Remove the TRS from the gear case. Refer to section 2.33.2.
24. Disconnect the harness (black) connector from the synchronous reference sensor (SRS) at the left rear wall of the gear case. Remove the SRS from the gear case. Refer to section 2.32.2.
25. Remove any electrical components, connectors or wiring looms from the engine.
26. With the engine mounted on the overhaul stand, remove all of any remaining subassemblies and parts from the cylinder block.
    [a] To remove the one piece valve rocker cover, refer to section 1.6.2.
    [b] To remove the two piece valve rocker cover, refer to section 1.6.3.
    [c] To remove the three piece valve rocker cover. Refer to section 1.6.5.
    [d] Remove the engine lifter brackets, refer to section 1.5.2.
    [e] Remove the crankshaft pulley, refer to section 1.13.2.
    [f] Remove the crankshaft vibration damper, refer to section 1.12.2.
    [g] Remove the accessory drive, refer to section 1.29.2.
    [h] Remove the gear case cover, refer to section 1.10.2.
    [i] Remove the camshaft drive gear, refer to section 1.25.2.
    [j] Remove the bull gear and camshaft idler gear assembly, refer to section 1.27.2.
    [k] Remove the adjustable idler gear assembly, refer to section 1.26.2.
    [l] Remove the crankshaft timing gear and timing wheel, refer to section 1.28.2.
    [m] Remove the gear case, refer to section 1.11.2.
    [n] Remove the camshaft, refer to section 1.24.2.
    [o] Remove the cylinder head, refer to section 1.2.2.
    [p] Remove the flywheel, refer to section 1.14.2.
    [q] Remove the flywheel housing, refer to section 1.16.2.
    [r] Remove the oil pan, refer to section 3.11.2.
    [s] Remove the piston and connecting rod assembly, refer to section 1.19.2.
    [t] Remove the crankshaft, refer to section 1.7.2.

 Copyright © 2004 DETROIT DIESEL CORPORATION

NOTICE:
Before removing main bearing caps, be sure each is stamped or punch-marked in numerical order, beginning with No. 1 at the front, to ensure installation in their original position. Mark all caps on the oil cooler side (right side) of the engine to prevent reversal at assembly. Failure to mark numerical order may result in the caps being put back in incorrect order, improper crankshaft support and severe crankshaft or bearing damage or both.

[u] Remove the crankshaft main bearings, refer to section 1.9.2.

1.1.3 Cleaning the Cylinder Block

Before removing cylinder liners for block cleaning, the liner bores should be gaged to determine whether liner replacement is necessary. Refer to section 1.21.2.2.

Remove cylinder liners with the cylinder liner removal tool, J 35791, before putting the block in cleaning or descaling baths, to avoid trapping cleaning agents in block liner seating bores. See Figure 1-8.

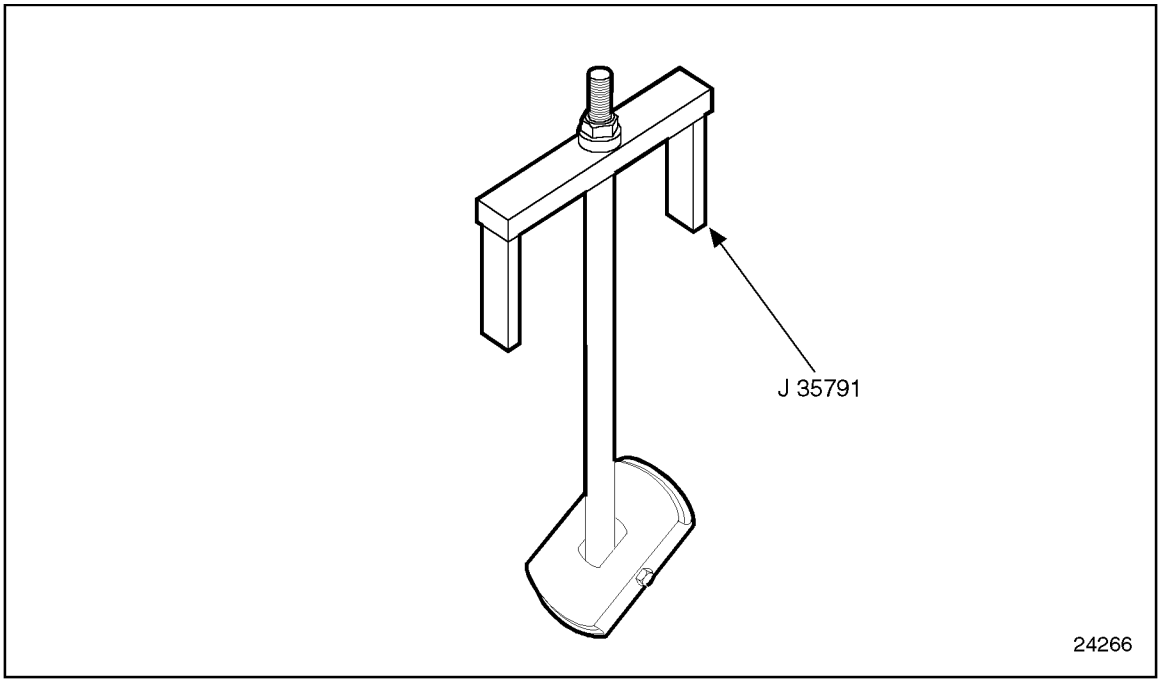

Figure 1-8 Cylinder Liner Removal Tool

(Rev. 2004) *All information subject to change without notice.*
6SE483 0401 Copyright © 2004 DETROIT DIESEL CORPORATION

After disassembling and before removing the cylinder block from the overhaul stand for cleaning and inspection, install the two metric eye bolts J 35595 to the cylinder block. See Figure 1-9.

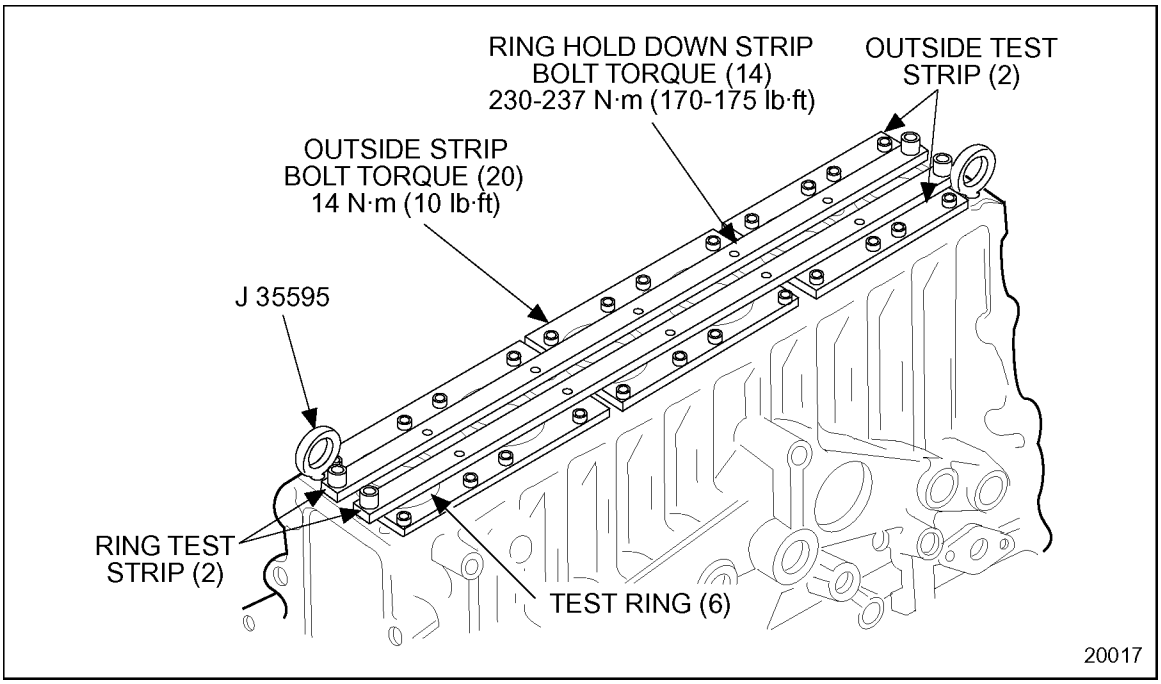

Figure 1-9 Cylinder Block Test Deck Plate Installation

Clean the cylinder block as follows:

1. Remove all oil and water gallery and weep hole plugs to allow the cleaning solution to enter the inside of the oil and water passages. On current block, remove bolt-on plate or piston-cooling oil spray nozzle at the base of each cylinder bore.
2. Immerse and agitate the block in a hot bath of a commercial, heavy-duty alkaline solution.
3. Wash the block in hot water or steam clean it to remove the alkaline solution.
4. If the water jackets are heavily scaled, proceed as follows:
   - [a] Immerse and agitate the block in a bath of inhibited phosphoric acid.
   - [b] Allow the block to remain in the acid bath until the bubbling action stops (approximately 30 minutes).
   - [c] Lift the block, drain it and immerse it again in the same acid solution for 10 more minutes. Repeat until all scale is removed from the water jacket area.
   - [d] Rinse the block in clear, hot water to remove the acid solution.
   - [e] Neutralize the acid that may cling to the casting by immersing the block in an alkaline bath.
   - [f] Wash the block in clean water or steam clean it.

 Copyright © 2004 DETROIT DIESEL CORPORATION

CAUTION:

To avoid injury from flying debris when using compressed air, wear adequate eye protection (face shield or safety goggles) and do not exceed 40 psi (276 kPa) air pressure.

5. Dry the cylinder block with compressed air. Blow out all of the bolt holes and passages with compressed air.

NOTE:
The above cleaning procedure may be used on all ordinary cast iron and steel parts for the engine. Aluminum parts, such as flywheel housing, air intake manifold, oil filter adaptor and the camshaft gear access cover should NOT be cleaned in this manner. Mention will be made of special procedures when necessary.

6. Be certain that all water passages and oil galleries have been thoroughly cleaned and dried. Install weep hole plugs and precoated pipe plugs. Install new cup plugs using a coating of good grade non-hardening sealant such as Loctite® 620 or equivalent. Refer to section ADDITIONAL INFORMATION1.A, "Engine Plug and Dowel Chart."
7. Pressure test the cylinder block. Two methods of cylinder block pressure testing may be used depending on the test facilities available:
   [a] Immersion method; refer to section 1.1.3.1.
   [b] Leak-marker method; refer to section 1.1.3.2.

(Rev. 2004) *All information subject to change without notice.*
6SE483 0401 Copyright © 2004 DETROIT DIESEL CORPORATION

1.1.3.1 Testing the Cylinder Block (Immersion Pressure Method)

Use cylinder block pressure test kit, J 36223–D, for immersion method pressure testing as follows:

1. Install cylinder liners with new seal rings and crevice seals. Refer to section 1.21.3. Seat the liners firmly in the block counterbores with cylinder liner installation tool, J 35597.
2. Install two metric eye bolts, J 35595, in the head bolt holes at opposite ends of the block. See Figure 1-10.

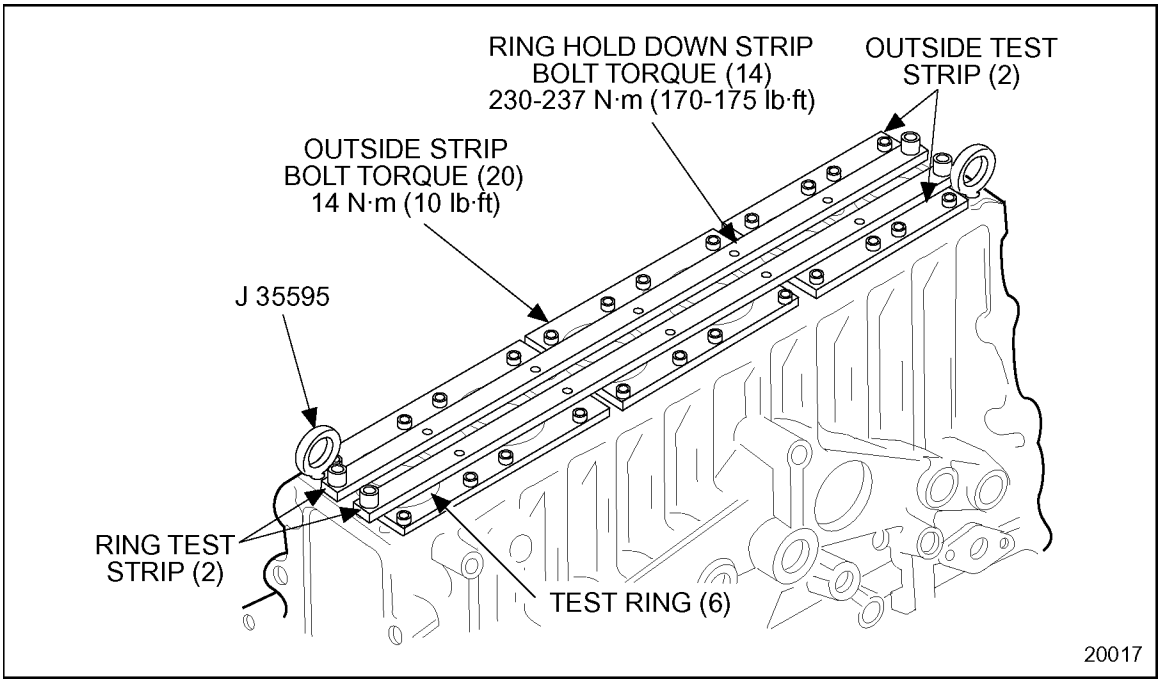

Figure 1-10 Cylinder Block Test Deck Plate Installation

3. Install the cylinder block test strips and rings. See Figure 1-10.
4. Install the bolts through the strips and into the cylinder block. Torque the bolts on the ring strips to 230-237 N·m (170-175 lb·ft). Torque the bolts on the outside strips to 14 N·m (10 lb·ft).

NOTE:
Because of a design change to the 1991 cylinder block, the water inlet cover plate tool has changed. Refer to section ADDITIONAL INFORMATION1.A, for instructions on modifying the former tool, J 36223-7, part of J 36223–D.

 Copyright © 2004 DETROIT DIESEL CORPORATION

5. Install the water inlet cover plate, J 36223-7A, part of J 36223–D. See Figure 1-11. Use the bolt supplied with the tool to secure it to the cylinder block.

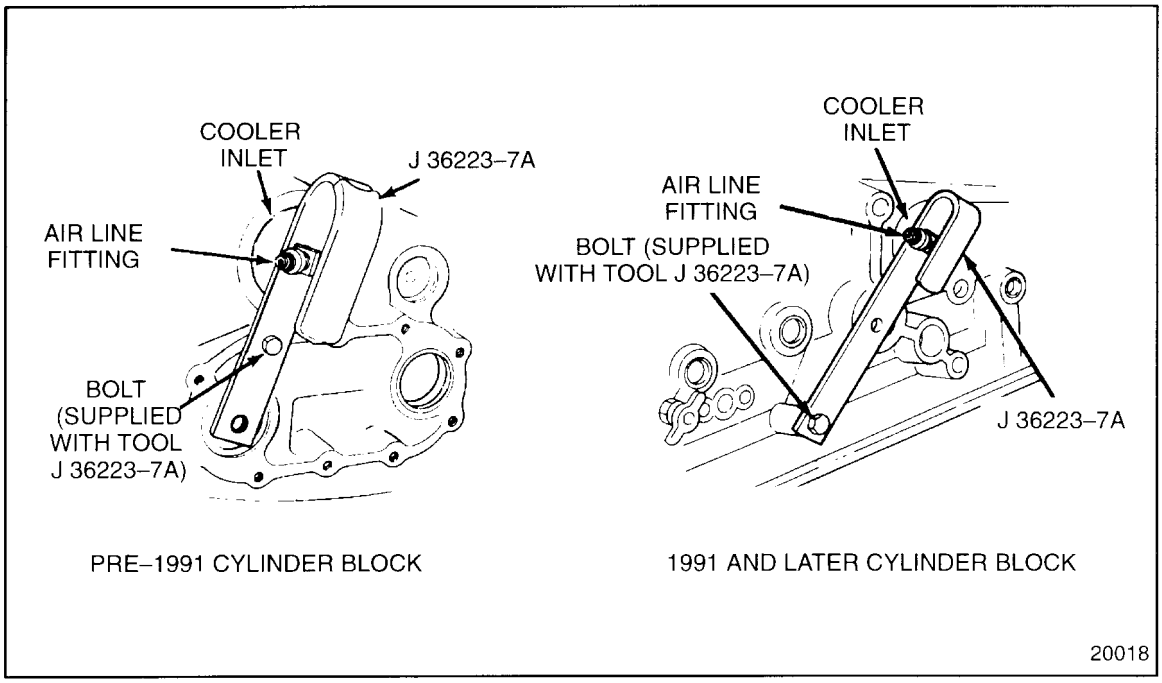

Figure 1-11 Water Inlet Cover Plate Installation

NOTE:
At the base of each liner, the space between upper and lower liner seals is vented to the block surface on the left side. Any coolant leakage past the upper seal is drained to the outside rather than into the crankcase, and is easily detected by a visual inspection.

6. With a suitable lifting device and spreadable bars, immerse the cylinder block for twenty minutes in a tank of water heated to 82-93°C (180-200°F).
7. Attach an air line to the water inlet cover plate and apply 138 kPa (20 lb/in.^{2}) air pressure to the water jacket. Observe the water in the tank for bubbles that will indicate cracks or leaks. A cracked cylinder block must be replaced by a new block.

⚠ CAUTION:

To avoid injury from flying debris when using compressed air, wear adequate eye protection (face shield or safety goggles) and do not exceed 40 psi (276 kPa) air pressure.

8. Remove the block from the water tank. Remove the plates and gaskets and blow out all of the passages in the block with compressed air.
9. Remount the cylinder block to the engine overhaul stand, J 29109. See Figure 1-6.

(Rev. 2004) *All information subject to change without notice.*
6SE483 0401 Copyright © 2004 DETROIT DIESEL CORPORATION

1.1.3.2 Testing the Cylinder Block (Leak-Marker Pressure)

When a large water tank is not available, or when it is desired to check the block for cracks without removing the engine from the vehicle cylinder block, leak-marker pressure testing may be used. However, it is necessary to remove the cylinder head, oil cooler, and oil pan.

1. Install cylinder liners with new seal rings and crevice seals. Refer to section 1.21.3. Seat the liners firmly in the block counterbores with cylinder liner installation tool, J 35597.
2. Install two metric eye bolts, J 35595, in the head bolt holes at opposite ends of the block. See Figure 1-10.
3. Fill the water jacket with a mixture of water and 3.8 liters (1 U.S. gallon) of permanent-type antifreeze. The antifreeze will penetrate small cracks and its color will aid in detecting their presence.
4. Install the cylinder block test strips and rings. See Figure 1-10.
5. Install the bolts through the strips and into the cylinder block. Torque the bolts on the ring strips to 230-237 N·m (170-175 lb·ft). Torque the bolts on the outside strips to 14 N·m (10 lb·ft).
6. Install the water inlet cover plate, J 36223-7A part of J 36223–D. See Figure 1-11. Use the bolt supplied with the tool to secure it to the cylinder block.

NOTE:
At the base of each liner, the space between upper and lower liner seals is vented to the block surface, on the left side. Any coolant leakage past the upper seal is drained to the outside rather than into the crankcase, and is easily detected by a visual inspection.

NOTE:
Because of a design change to the 1991 cylinder block, the water inlet cover plate tool has changed. Refer to section ADDITIONAL INFORMATION1.A, for instructions on modifying the former tool, J 36223-7 part of J 36223–D.

 Copyright © 2004 DETROIT DIESEL CORPORATION

7. Apply 138 kPa (20 lb/in.^{2}) air pressure to the water jacket and maintain this pressure for at least two hours to give the water and antifreeze mixture ample time to work its way through any cracks which may exist.
8. At the end of this test period, examine the outside diameter area of the liner flanges, oil passages, crankcase and exterior of the block for presence of the water and antifreeze mixture, which will indicate the presence of cracks. A cracked cylinder block must be replaced with a new block.

CAUTION:

To avoid injury from flying debris when using compressed air, wear adequate eye protection (face shield or safety goggles) and do not exceed 40 psi (276 kPa) air pressure.

9. After the pressure test is completed, remove the test deck plate and gasket and the water inlet cover plate. Drain the water jacket. Then blow out all of the passages in the cylinder block with compressed air.
10. Remount the cylinder block to the engine overhaul stand, J 29109. See Figure 1-6.

(Rev. 2004) *All information subject to change without notice.*
6SE483 0401 Copyright © 2004 DETROIT DIESEL CORPORATION

1.1.3.3 Inspection of the Cylinder Block

Perform the following for cylinder block inspection:

1. Remove the cylinder liners and regage to determine whether liner replacement is necessary. Refer to section 1.21.2.
2. Measure the bore of each cylinder with cylinder bore gage, J 5347-B, which has a dial indicator calibrated in 0.0001 in. increments. See Figure 1-12.

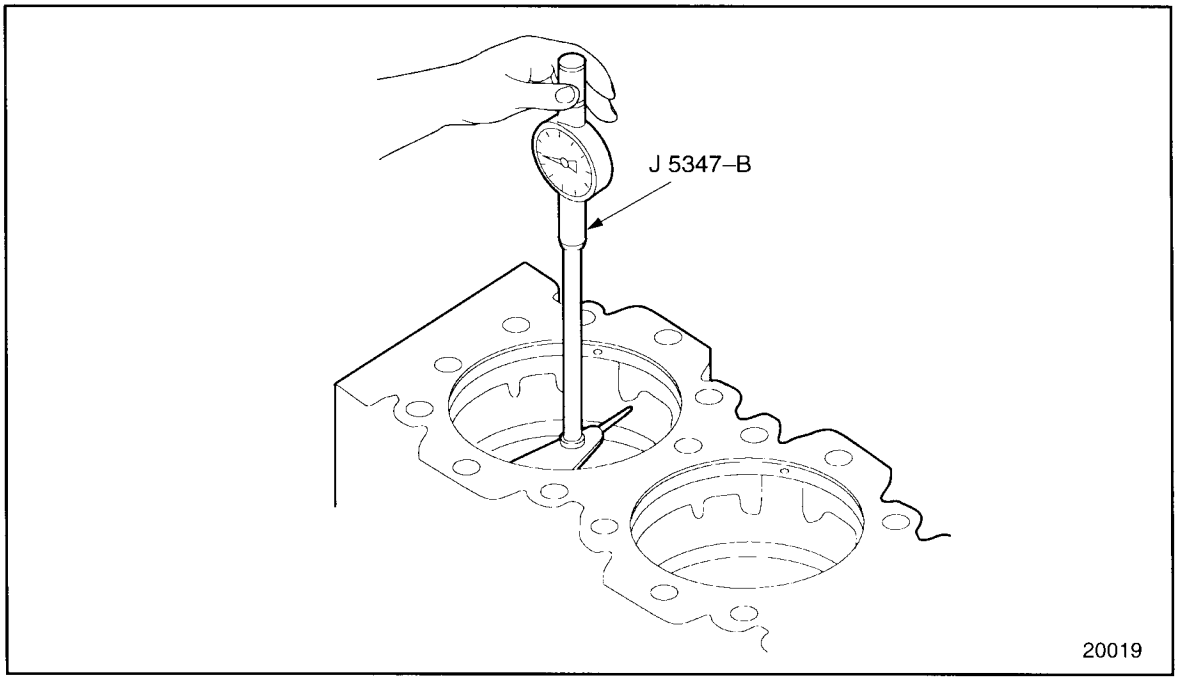

Figure 1-12 Gaging Cylinder Bores

 Copyright © 2004 DETROIT DIESEL CORPORATION

3. Measure cylinder block bore, at the positions on axis 90 degrees apart. See Figure 1-13. If the diameter does not exceed the dimensions listed in Table 1-1, the block may be reused.

NOTE:
The above measurements are average gage readings at each position. Also, the out-of-round must not exceed 0.0254 mm (0.001 in.).

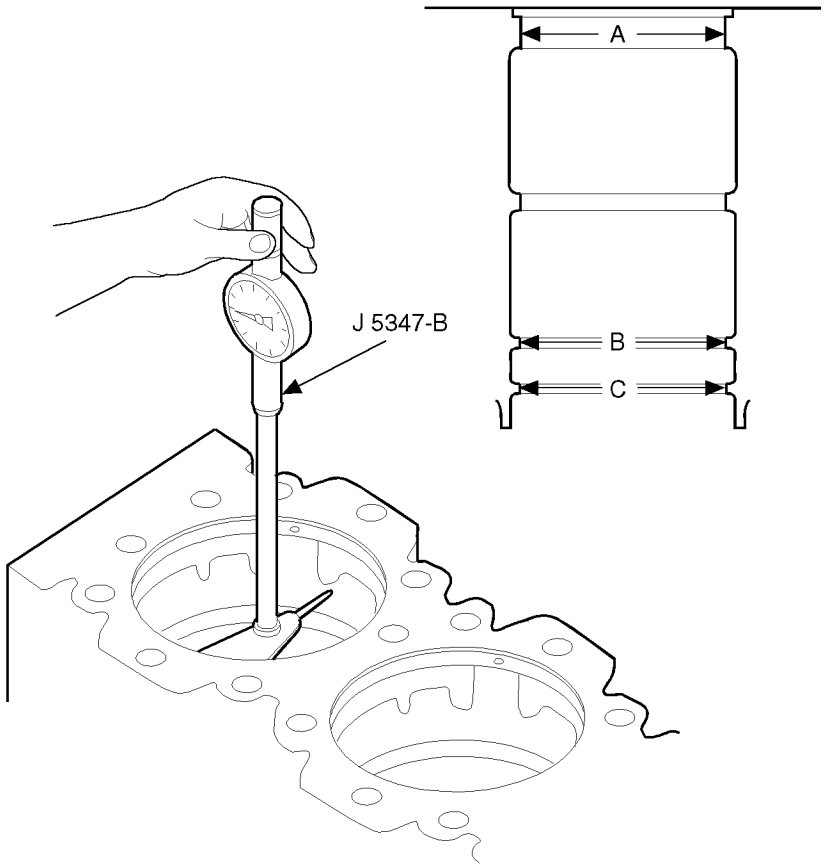

Figure 1-13 Maximum Cylinder Block Bore Diameters by Location (After Clean-up)

Location	Diameter, mm	Diameter, in.
A	149.050 - 149.120	5.868 - 5.871
B	146.050 - 146.120	5.750 - 5.753
C	146.050 - 146.120	5.750 - 5.753

Table 1-1 Acceptable Cylinder Bore Diameters

(Rev. 2004) *All information subject to change without notice.*
6SE483 0401 Copyright © 2004 DETROIT DIESEL CORPORATION

1.1.3.4 Inspection of Deck Flatness

Check the cylinder block deck for flatness with an accurate straightedge and feeler gage. See Figure 1-14.

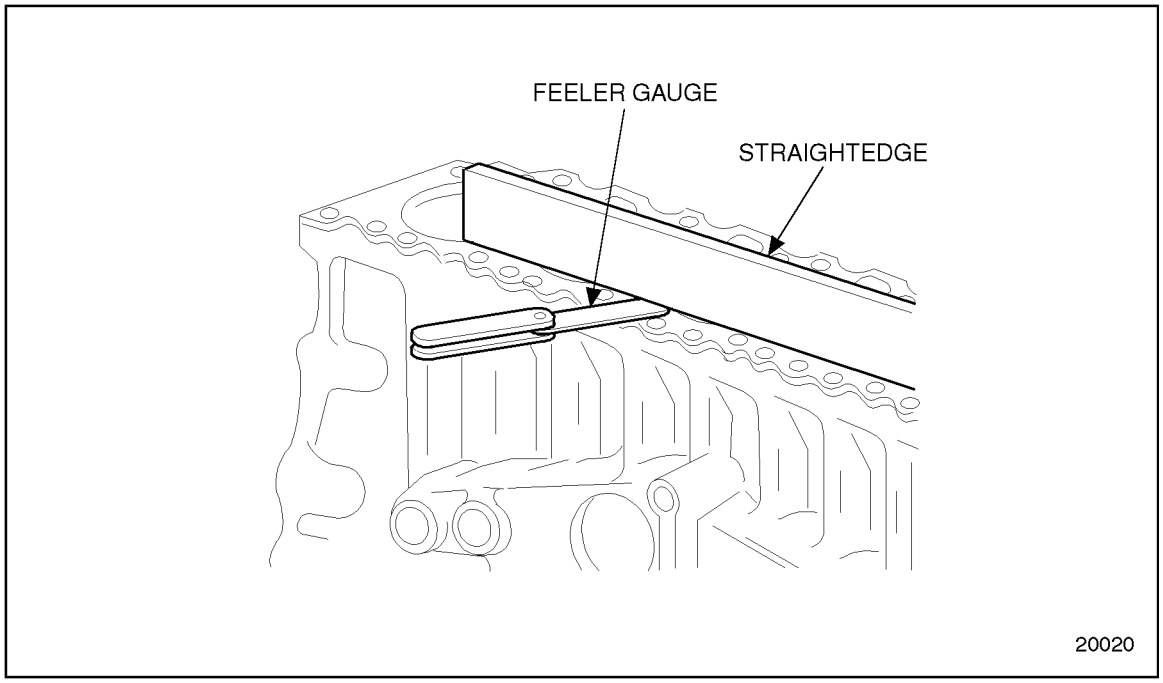

Figure 1-14 Checking Block Deck for Flatness

Check front-to-rear flatness next to the cylinder liner flanges on both sides, and side-to-side flatness between the liner flanges. The deck must be flat within 0.127 mm (0.005 in.) front-to-rear, and flat within 0.076 mm (0.003 in.) side-to-side. If not, the deck must be resurfaced.

 Copyright © 2004 DETROIT DIESEL CORPORATION

NOTICE:
The camshaft is mounted in the cylinder head so resurfacing of the block affects the position of the camshaft in relation to the adjustable idler gear and gear train.

Record the amount of stock removed from the cylinder block by stamping the amount removed on the cylinder block pad. See Figure 1-15.

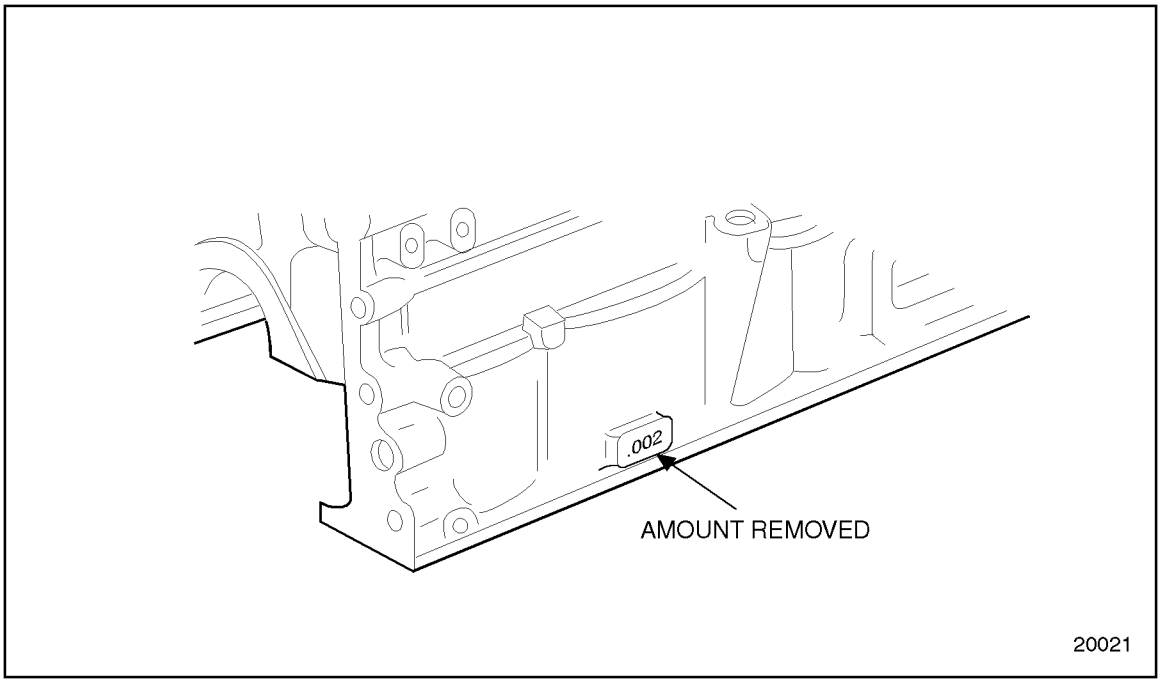

Figure 1-15 Recording Stock Removal on Cylinder Block Pad

(Rev. 2004) *All information subject to change without notice.*
6SE483 0401 Copyright © 2004 DETROIT DIESEL CORPORATION

1.1.3.5 Inspection of Main Bearing Bores

Perform the following steps for main bearing bore inspection:

1. Install the main bearing caps in their original positions. Lubricate the cap bolt threads and head contact surfaces with a small quantity of International Compound #2®.
   International Compound #2® is a registered trademark of IRMCO.
2. Install the main cap bolts and torque to 470-530 N·m (347-391 lb·ft).
3. Measure the main bearing bores using dial bore gage which has a dial indicator calibrated in 0.0001 in. increments. Set the cylinder bore gage on zero in master setting fixture. See Figure 1-16.

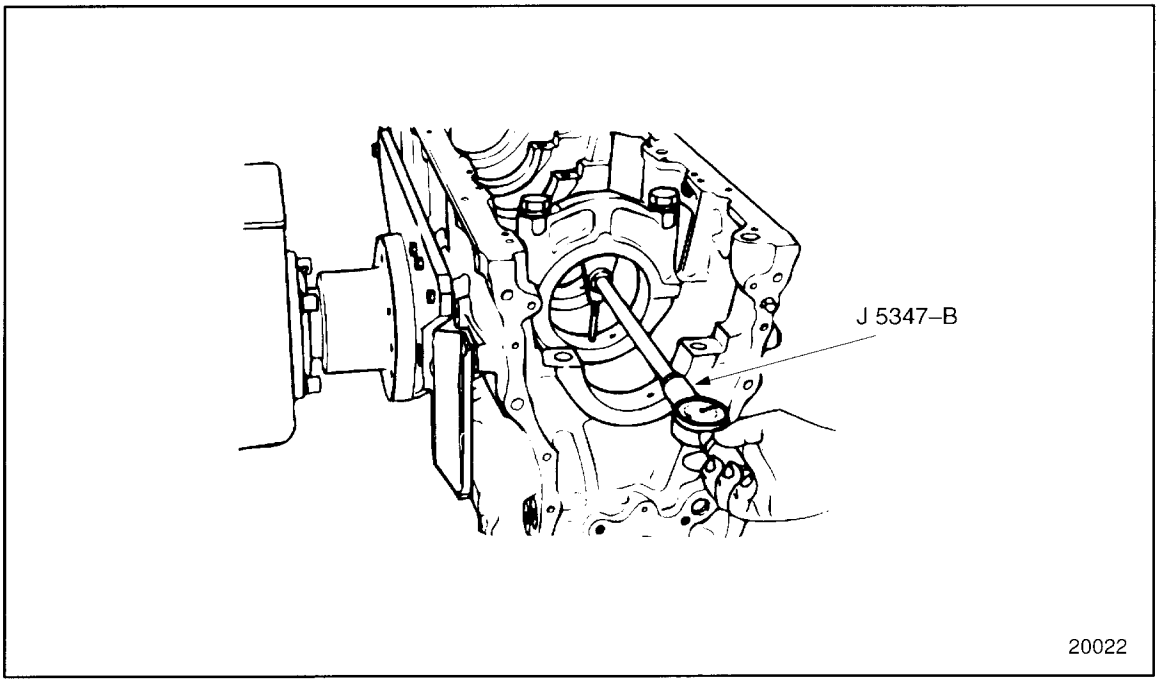

Figure 1-16 Gaging Main Bearing Bores

The bore diameter specifications is 133.00-133.025 mm (5.236-5.237 in.). Line boring is also necessary when a bearing cap must be replaced due to breakage or spun-bearing damage. Refer to section ADDITIONAL INFORMATION1.A, for line bore specifications which are listed in Table 1-17.

NOTE:
Dial bore master setting fixture should be used to zero the cylinder bore gage.

 Copyright © 2004 DETROIT DIESEL CORPORATION

1.1.3.6 General Inspection

Check all machined surfaces for nicks or burrs that could affect the fit of mating parts. Clean up as necessary by stoning. Also inspect all tapped holes for thread damage and retap or install helical thread inserts as necessary. Replace any loose or damaged dowel pins. Refer to section ADDITIONAL INFORMATION1.A, "Engine Plug and Dowel Charts" for specifications.

1.1.3.7 Rust Prevention

After inspection, if the cylinder block is not to be used immediately, spray the machined surfaces with engine oil.

NOTICE:
Castings free of grease or oil will rust when exposed to the atmosphere. Rust on machined surfaces may result in leakage.

If the block is to be stored for an extended period of time, spray or dip it in a polar-type rust preventive such as "Tectyl® 502-C" from Valvoline Oil Company (or equivalent).

Tectyl® is a registered trademark of Ashland Oil, Inc.

(Rev. 2004) *All information subject to change without notice.*
6SE483 0401 Copyright © 2004 DETROIT DIESEL CORPORATION

1.1.4 Reassembly of Cylinder Block

After the cylinder block has been cleaned and inspected, assemble the engine as follows:

⚠ CAUTION:

To avoid injury from flying debris when using compressed air, wear adequate eye protection (face shield or safety goggles) and do not exceed 40 psi (276 kPa) air pressure.

1. Before a reconditioned or new service replacement cylinder block is used, steam clean it to remove the rust preventive and blow out the oil galleries with compressed air.
2. If a new service replacement block is used, stamp the engine serial number and model number on the pad provided on the left side of the block, just below the deck. See Figure 1-17.

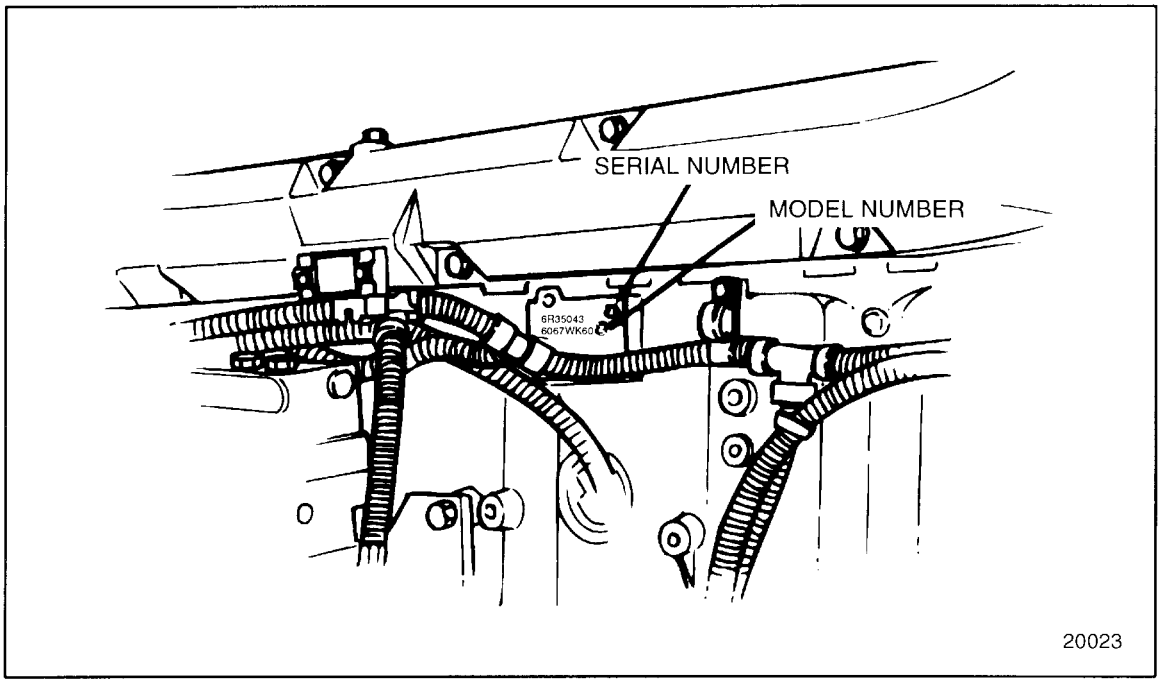

Figure 1-17 Location of Engine Serial and Model Numbers

3. Also stamp the position numbers on the main bearing caps and the position of the No. 1 bearing on the cooler side of the oil pan mounting flange of the block.
4. Install the main bearing caps in their original positions; refer to section 1.9.3.

 Copyright © 2004 DETROIT DIESEL CORPORATION

NOTICE:
Always check to make sure cooling nozzles are open and aligned after piston installation. An obstructed, misaligned, bent, or damaged nozzle may not provide proper piston cooling. A loosened nozzle may cause a loss of main gallery oil pressure. In either case, piston overheating or lack of adequate lubrication may result in severe engine damage.

5. On current non-premium engines with cast iron pistons, install the bolt-on plate over the oil gallery orifice at the base of each cylinder bore. On premium engines with closed-end rods and forged steel pistons, install oil spray nozzles into these openings. See Figure 1-18 for location of nozzle. Torque plate nozzle retaining bolts to 30–38 N·m (22–28 lb·ft).

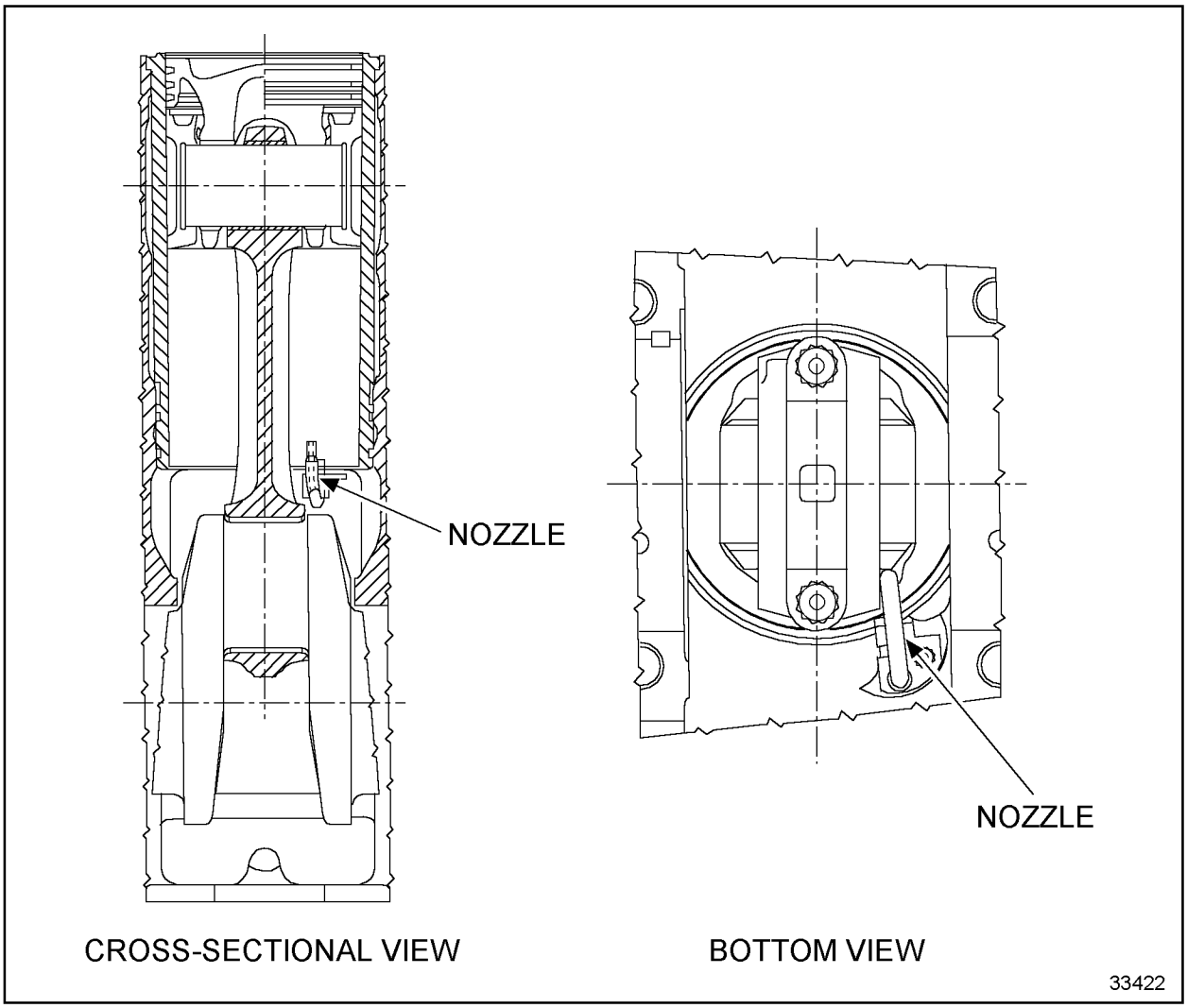

Figure 1-18 Oil Spray Nozzle Location

(Rev. 2004) *All information subject to change without notice.*
6SE483 0401 Copyright © 2004 DETROIT DIESEL CORPORATION

6. Install all of the required cup plugs. Use a good grade of non-hardening sealant such as Loctite® 620 (or equivalent). Apply a thin coat of sealant just inside the chamfer where the plug is to be installed and install using cup plug installation tool set, J 35653. See Figure 1-19.

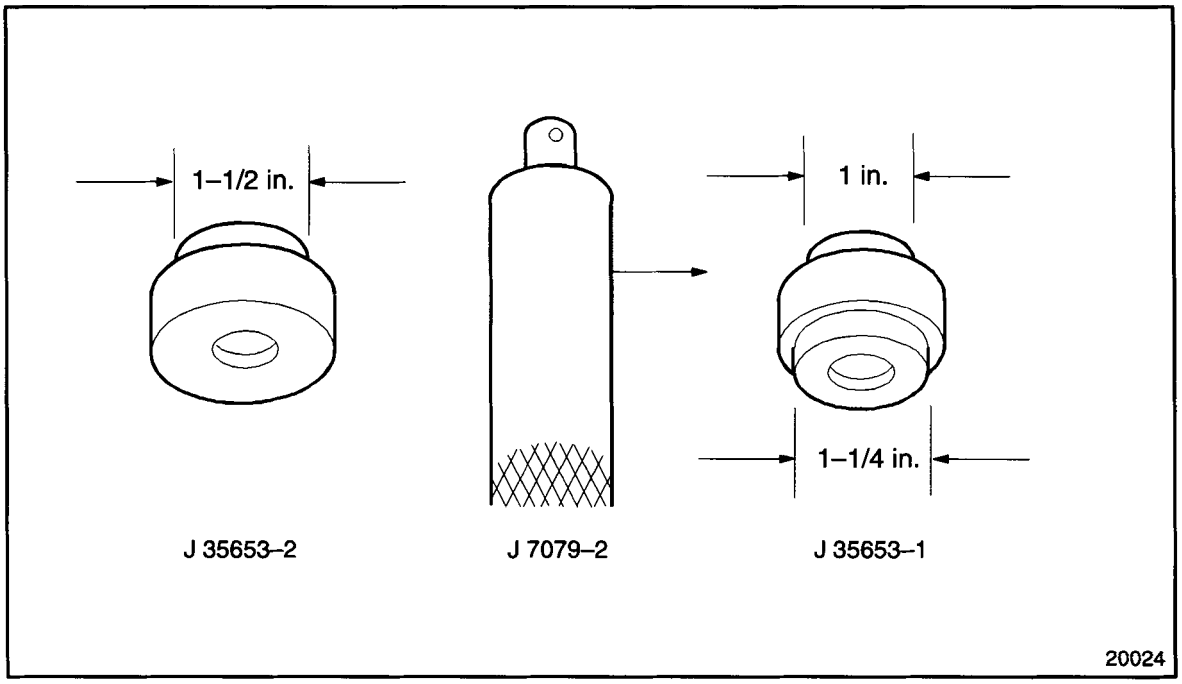

Figure 1-19 Cup Plug Installation Tool Set

 Copyright © 2004 DETROIT DIESEL CORPORATION

7. Install all of the required pipe plugs. Refer to section ADDITIONAL INFORMATION 1.A, "Engine Plug and Dowel Charts".

NOTE:
Whenever a pipe plug is removed from the cylinder block, the threads must be coated with Loctite®, PT-7260, pipe sealant with Teflon, or equivalent, before reassembly. Certain plugs available from the parts depot already have a sealer applied to the threads. Although unnecessary, this pre-coating will not be affected if pipe sealer with Teflon is also applied.

8. With the engine mounted on the overhaul stand, install all of any remaining subassemblies and parts on the cylinder block.
   [a] To install the crankshaft main bearings, refer to section 1.9.3.
   [b] To install the crankshaft, refer to section 1.7.3.
   [c] To install the piston and connecting rod assembly, refer to section 1.19.5.
   [d] To install the oil pan, refer to section 3.11.4.
   [e] To install the flywheel housing, refer to section 1.16.3.
   [f] To install the flywheel, refer to section 1.14.3.
   [g] To install the cylinder head, refer to section 1.2.5.
   [h] To install the camshaft, refer to section 1.24.6.
   [i] To install the gear case, refer to section 1.11.3.
   [j] To install the crankshaft timing gear and timing wheel, refer to section 1.28.3.
   [k] To install the adjustable idler gear assembly, refer to section 1.26.3.
   [l] To install the bull gear and camshaft idler gear assembly, refer to section 1.27.3.
   [m] To install the camshaft drive gear, refer to section 1.25.4.
   [n] To install the gear case cover, refer to section 1.10.3.
   [o] To install the accessory drive, refer to section 1.29.5.
   [p] To install the crankshaft vibration damper, refer to section 1.12.3.
   [q] To install the crankshaft pulley, refer to section 1.13.3.
   [r] To install the engine lifter brackets, refer to section 1.5.3.
   [s] To install the valve rocker cover, refer to section 1.6.8(one piece) and refer to section 1.6.9(two piece and three piece).
   [t] Install any electrical components, connectors or wiring looms that were removed during disassembly.
   [u] Install the SRS, refer to section 2.32.3.
   [v] Install the TRS, refer to section 2.33.3.

(Rev. 2004) *All information subject to change without notice.*
6SE483 0401 Copyright © 2004 DETROIT DIESEL CORPORATION

[w] Install the ECM, refer to section 2.21.3for DDEC I, refer to section 2.20.4for DDEC II, refer to section 2.19.3for DDEC III/IV, and cold plate if required, refer to section 2.19.3.

[x] Install a suitable lifting device to the engine. See Figure 1-5.

CAUTION:

To avoid injury from a falling engine, ensure the engine is securely attached to the engine overhaul stand before releasing the lifting sling.

[y] Remove the engine from the overhaul stand. See Figure 1-6.

Transfer the engine to a suitable engine dynamometer test stand. Operate the engine on a dynamometer following the Run-in procedure; refer to section 11.8.3.2.

Install the engine in the equipment from which it was removed.

 Copyright © 2004 DETROIT DIESEL CORPORATION

1.2 CYLINDER HEAD

The Series 60 cylinder head combines intake and exhaust valve porting and fuel injector seats with water jacketing to cool the ports, injectors and combustion chamber area. See Figure 1-20.

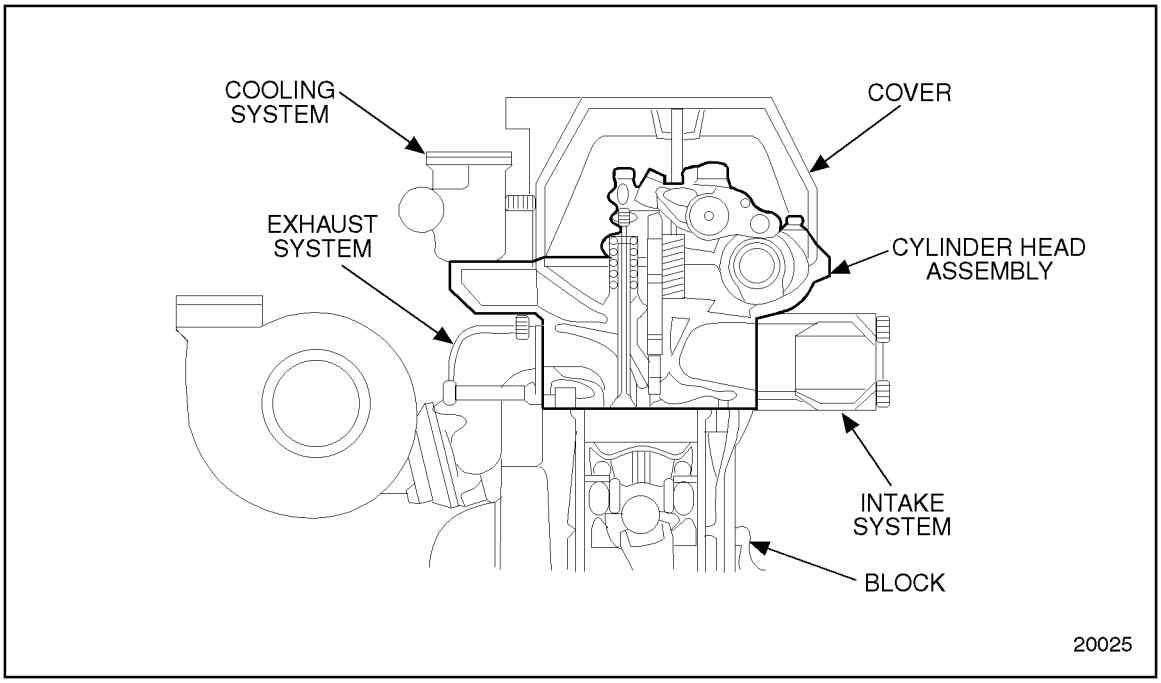

Figure 1-20 Cylinder Head Assembly and Mating Components

With the overhead camshaft design, the cylinder head assembly includes:

- Cylinder head
- Valve and injector operating mechanism
- Injector, valve guide and related parts
- Camshaft and camshaft bearings

(Rev. 2004) *All information subject to change without notice.*
6SE483 0401 Copyright © 2004 DETROIT DIESEL CORPORATION

The nested roller follower type rocker arms transmit camshaft motion directly to the valves and injectors. See Figure 1-21.

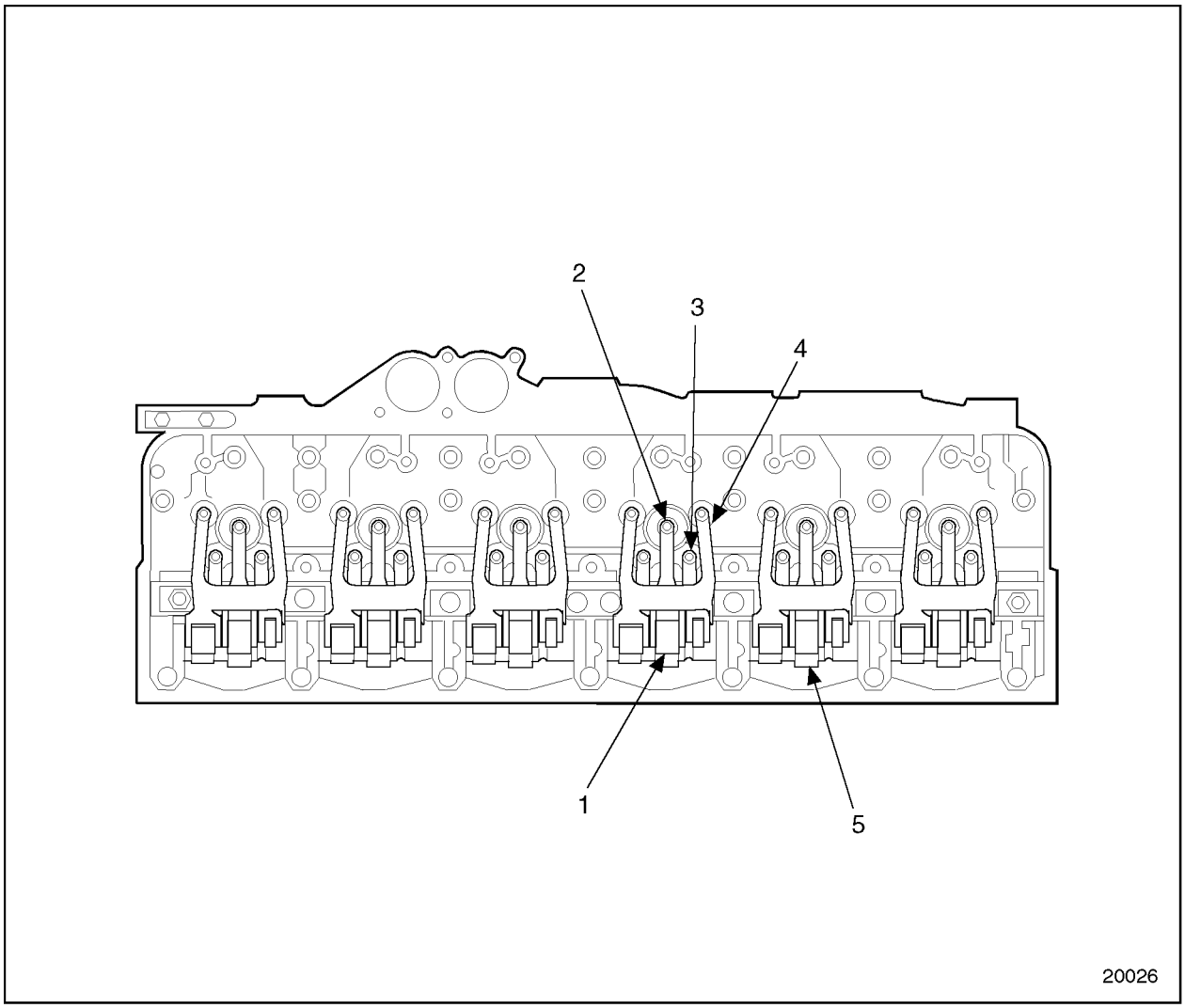

1. Roller Follower
2. Injector Rocker Arm
3. Intake Valve Rocker Arm
4. Exhaust Valve Rocker Arm
5. Camshaft

Figure 1-21 Cylinder Head Assembly

 Copyright © 2004 DETROIT DIESEL CORPORATION

The nested roller follower type rocker arms transmit cam motion directly to the valves. See Figure 1-22.

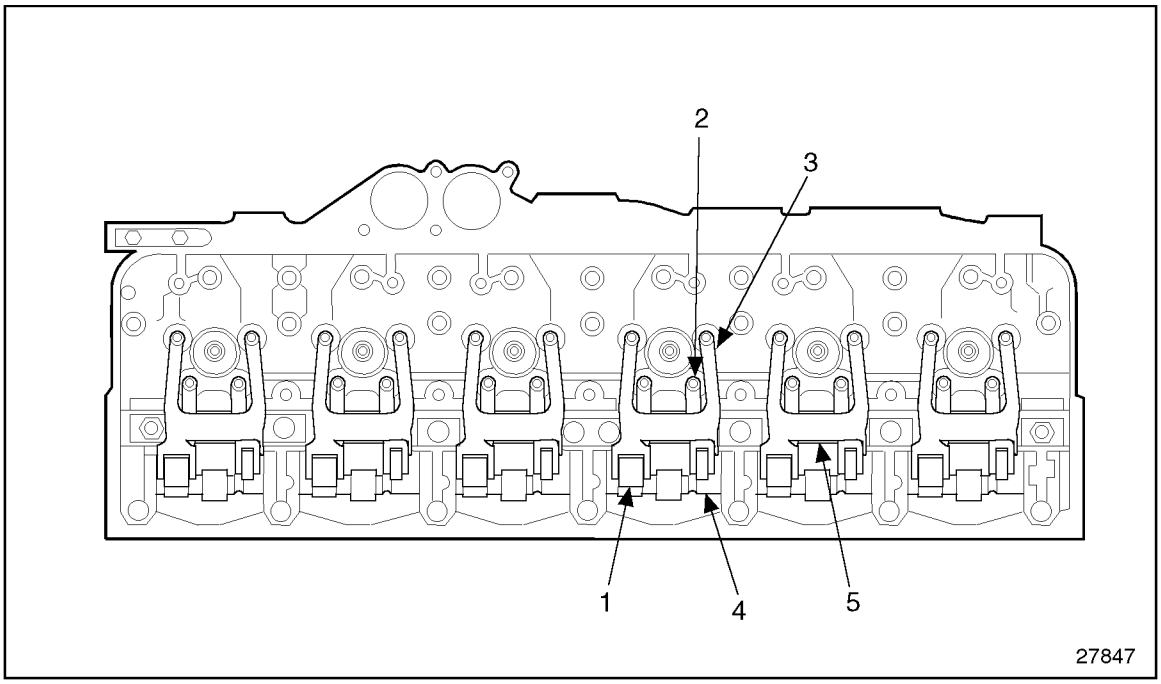

1. Roller Follower
2. Intake Valve Rocker Arm
3. Exhaust Valve Rocker Arm
4. Camshaft
5. Spacer

Figure 1-22 Cylinder Head Assembly (Series 60G Engine)

(Rev. 2004) *All information subject to change without notice.*
6SE483 0401 Copyright © 2004 DETROIT DIESEL CORPORATION

The porting within the cylinder head is cross-flow, with intake and exhaust ports on opposite sides for minimum restriction and maximum exposure to coolant flow. Four valves are used per cylinder, two intake and two exhaust. See Figure 1-23.

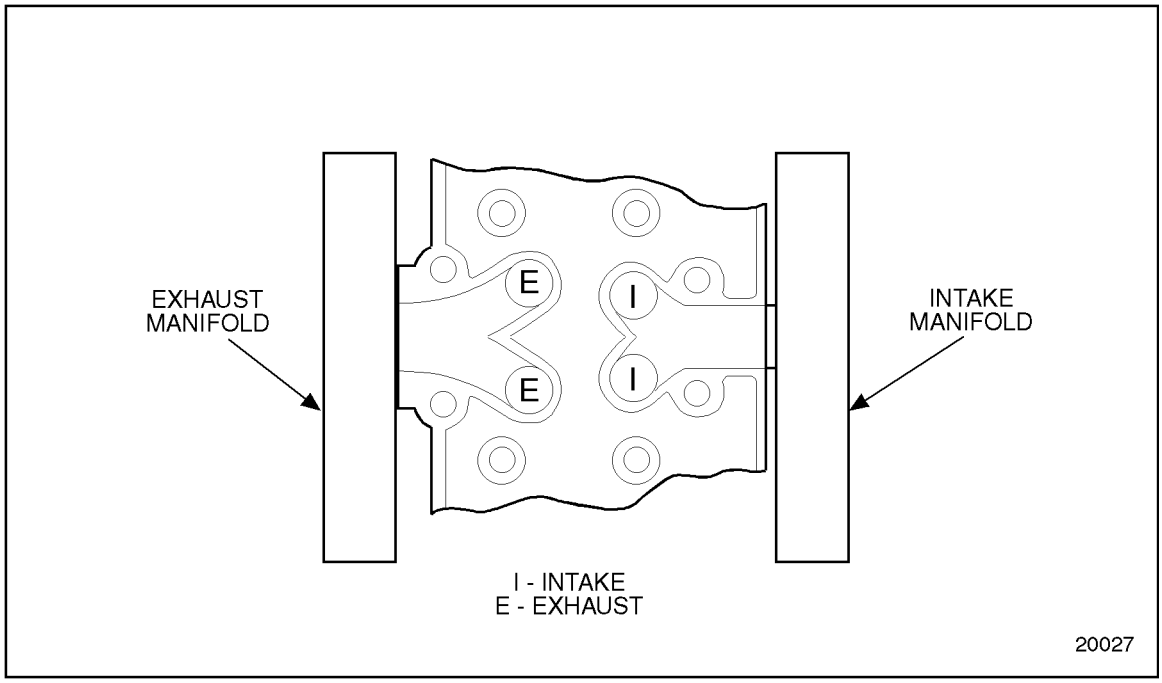

Figure 1-23 Intake and Exhaust Valve Porting

 Copyright © 2004 DETROIT DIESEL CORPORATION

Replaceable valve guides, valve spring seats, valve stem seals, valve rotators and valve seat inserts are used on all valves. See Figure 1-24.

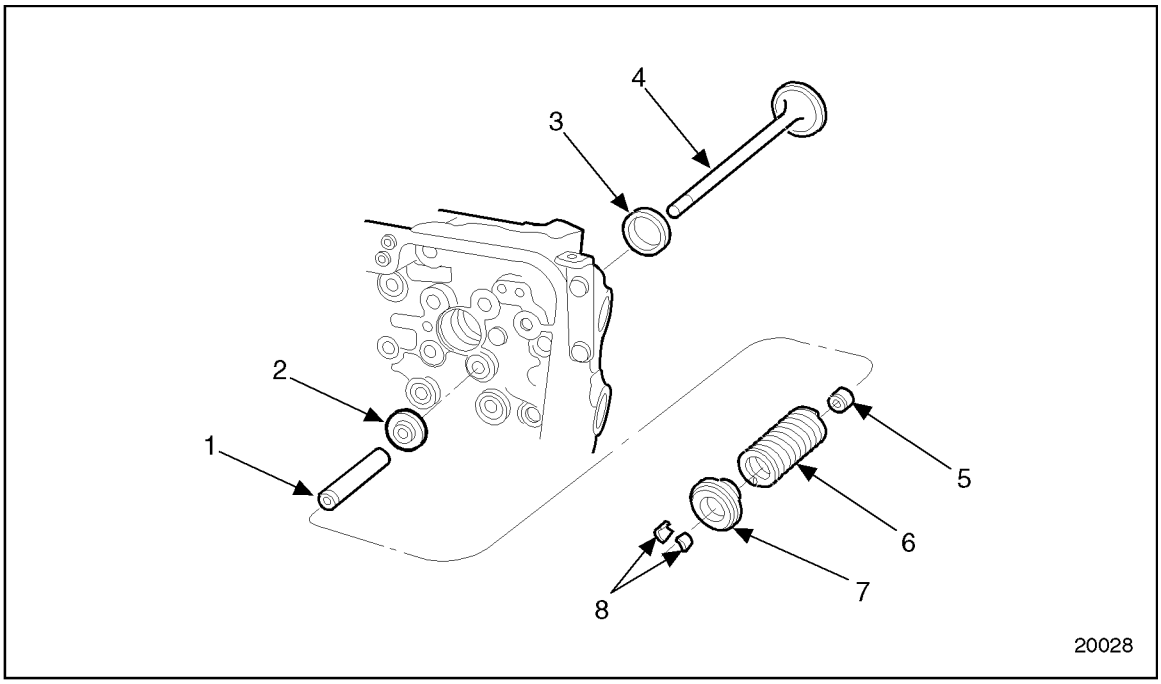

1. Valve Guide
2. Valve Spring Seat
3. Valve Seat Insert
4. Valve
5. Valve Stem Oil Seal
6. Valve Spring
7. Valve Rotator
8. Valve Keepers

Figure 1-24 Valve Guides and Related Parts

(Rev. 2004) *All information subject to change without notice.*
6SE483 0401 Copyright © 2004 DETROIT DIESEL CORPORATION

Copper injector tubes extending through the cylinder head water jacket are required for the fuel injectors. The tubes are directly exposed to the coolant. An O-ring seals the injector tube upper end in the recess. The lower end of the injector tube must be expanded and flared during the installation process to contain a tight fit in the firedeck bore. A beveled seat machined in the tube provides a compression-tight seal when the injector is seated, as well as affording effective heat transfer facilitating injector cooling. Refer to section 2.4.

Fuel galleries machined into the head supply fuel under fuel pump pressure to all injectors, and excess fuel is returned to the fuel tank. The fuel gallery outlet (restricted) fitting is installed in the rear of the cylinder head. See Figure 1-25.

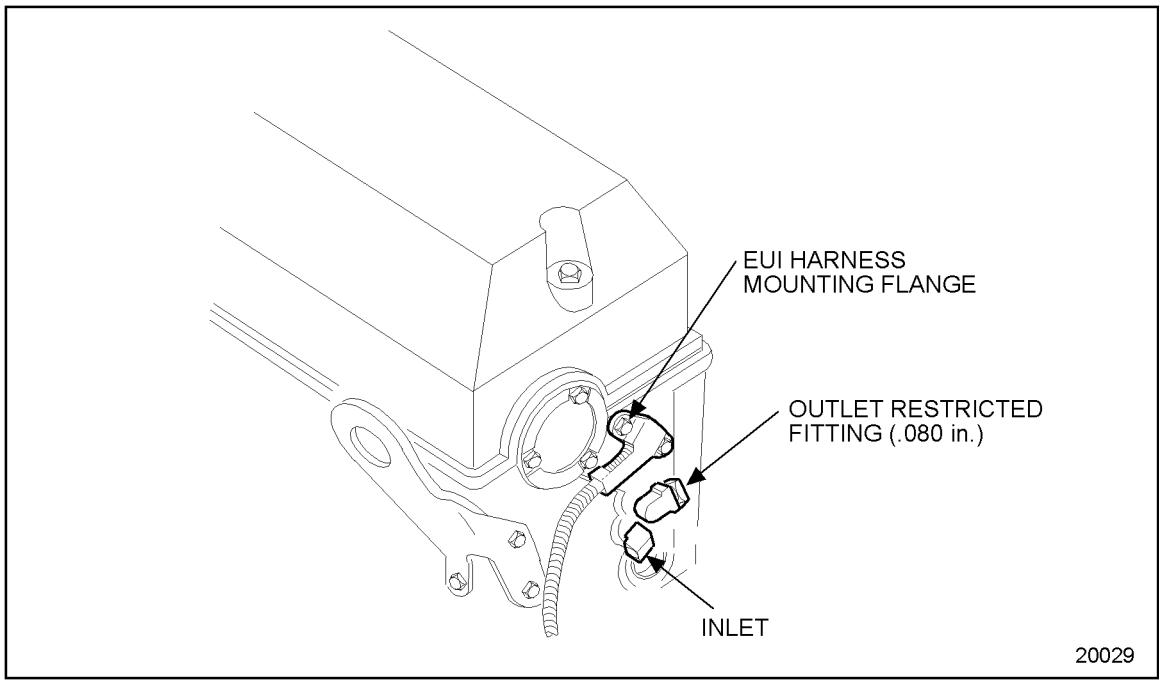

Figure 1-25 Fuel Gallery Inlet and Outlet Fittings

 Copyright © 2004 DETROIT DIESEL CORPORATION

1.2.1 Repair or Replacement of Cylinder Head

To determine if repair is possible or replacement is necessary, perform the following procedure. See Figure 1-26.

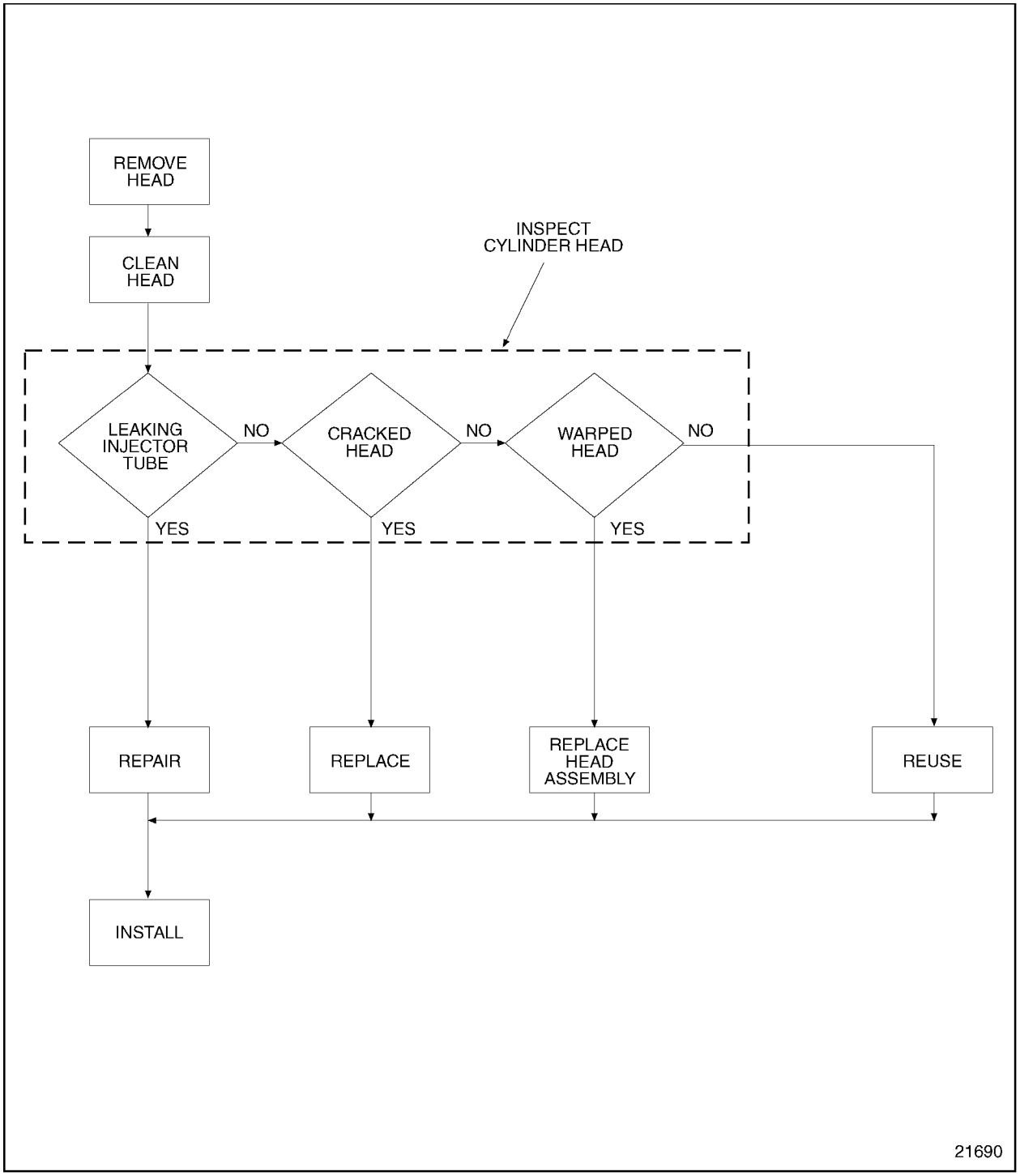

Figure 1-26 Flowchart for Repair or Replacement of Cylinder Head

(Rev. 2004) *All information subject to change without notice.*
6SE483 0401 Copyright © 2004 DETROIT DIESEL CORPORATION

1.2.2 Removal and Cleaning of Cylinder Head

Because optional and accessory equipment varies with the engine application, this procedure covers only the basic engine. If the engine is equipped with accessories that affect cylinder head removal, note the mounting details of each to assure correct installation at reassembly.

Remove the cylinder head as follows:

1. Drain the cooling system. Refer to section 13.13.4.
2. Disconnect the exhaust pipe at the turbocharger. Refer to section 6.6.2.
3. Remove the air cleaner and charge air cooler ducting from turbocharger and intake manifold. Refer to section 6.2.2and refer to section 6.4.2.

 Copyright © 2004 DETROIT DIESEL CORPORATION

4. Disconnect the turbocharger coolant supply (if water-cooled), oil supply and drain lines, and remove the turbocharger if necessary. See Figure 1-27.

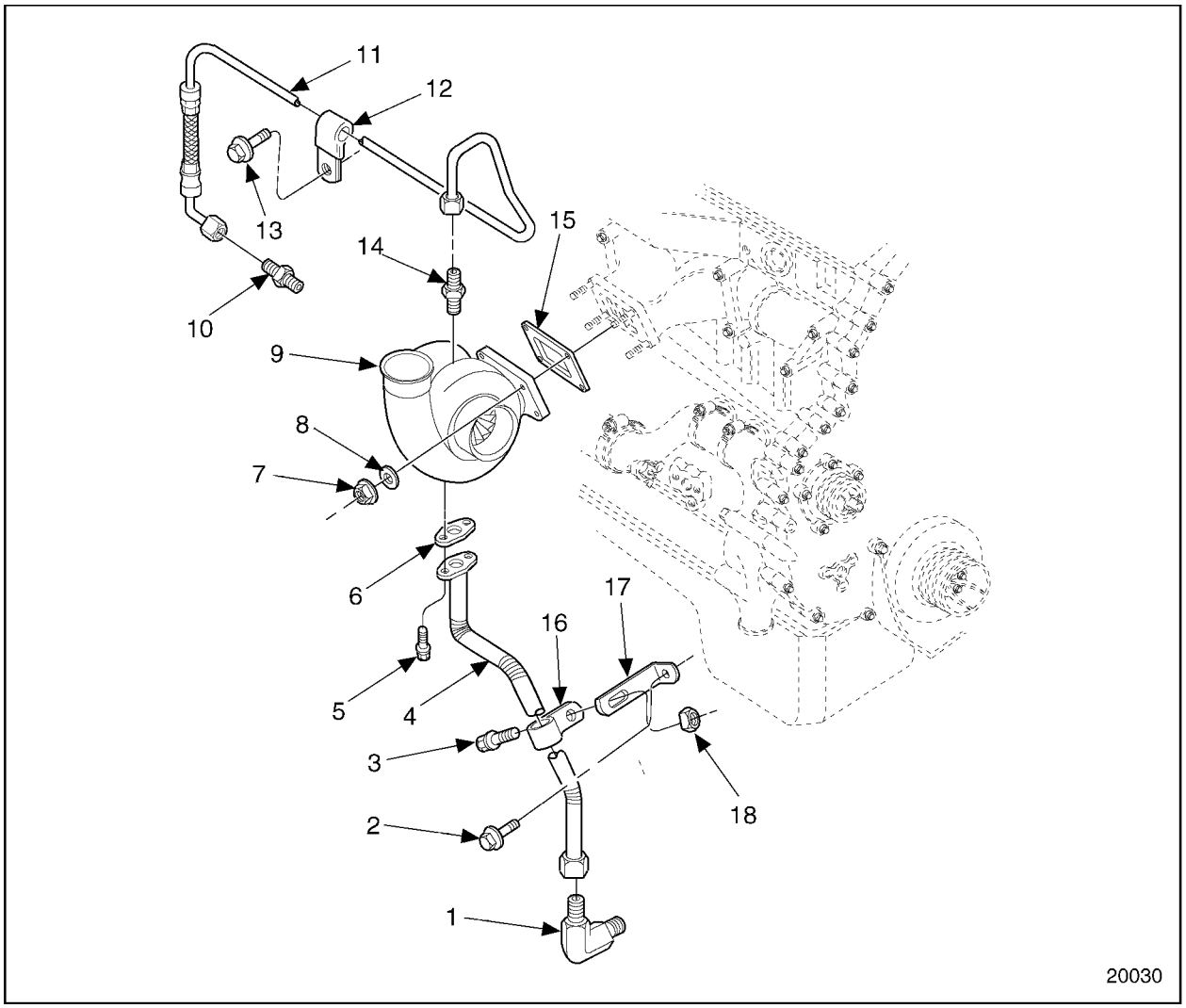

1. Elbow, Oil Drain Tube
2. Bolt, Mounting Bracket
3. Bolt, Oil Drain Tube Clip
4. Tube, Turbo Oil Drain
5. Bolt, Oil Drain Tube Mounting
6. Gasket, Turbo Oil Drain Tube
7. Nut, Turbo Mounting
8. Washer, Turbo Mounting
9. Turbocharger Assembly
10. Connector, Oil Supply Tube
11. Tube Assembly, Turbo Oil Supply
12. Clip, Oil Supply Tube
13. Bolt, Oil Supply Tube Clip
14. Connector, Oil Supply Tube (to turbocharger)
15. Gasket, Turbo Exhaust Inlet
16. Clip, Oil Drain Tube
17. Bracket, Oil Drain Tube Clip Mounting
18. Nut, Oil Drain Tube Clip

Figure 1-27 Turbocharger Oil Lines

(Rev. 2004) *All information subject to change without notice.*
6SE483 0401 Copyright © 2004 DETROIT DIESEL CORPORATION

5. On pleasure craft marine engines, remove water-cooled charge air cooler from cylinder head. See Figure 1-28

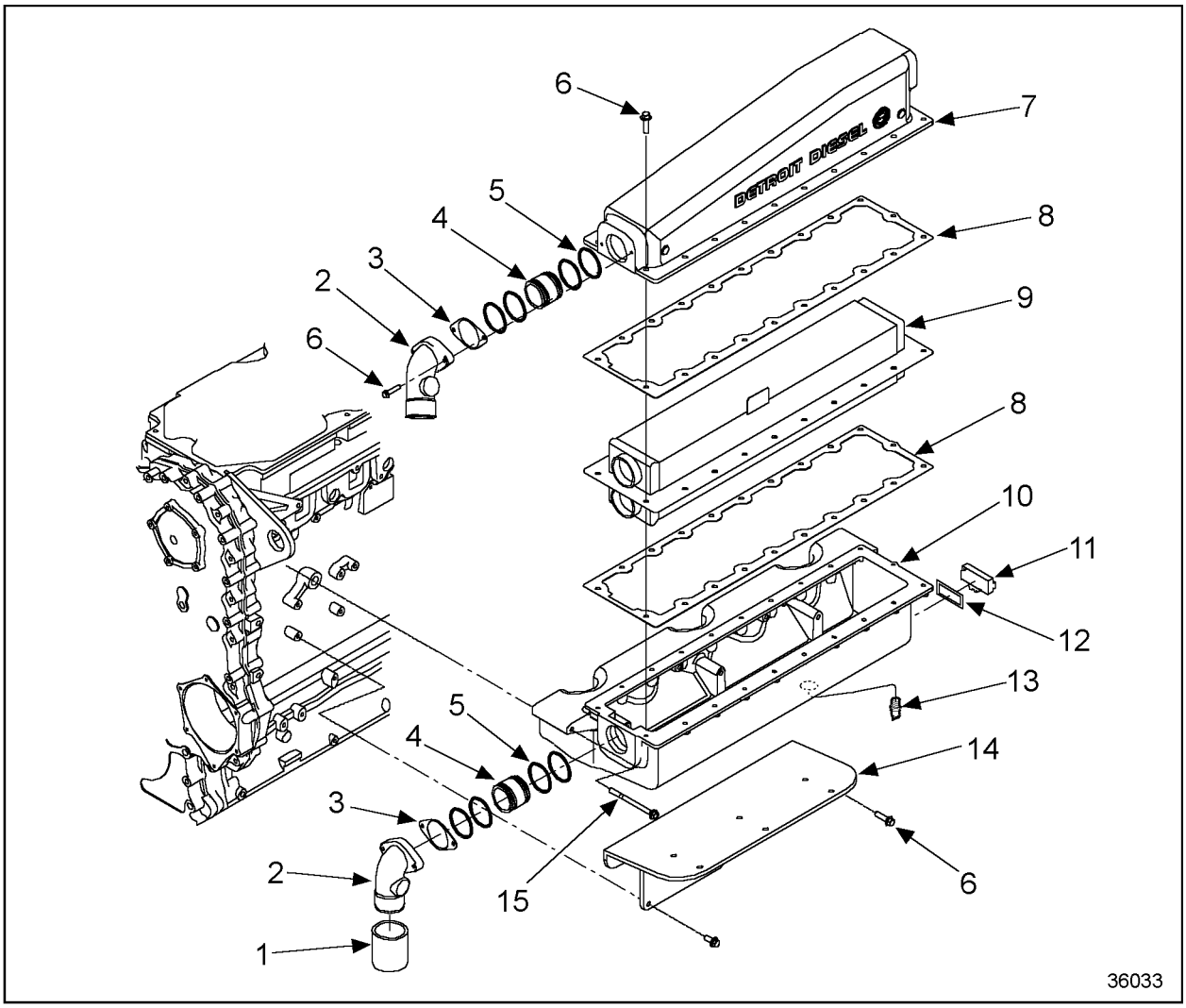

1. Hose
2. Elbow
3. Gasket
4. Sleeve
5. Seal Ring
6. Bolt
7. Housing Upper
8. Gasket
9. CAC Mixer
10. Housing Lower
11. Sensor
12. Seal Ring
13. Air Temperature Sensor
14. Bracket
15. Bolt

Figure 1-28 Intake Manifold and Related Parts (Series 60 Heat Exchanger-Cooled Pleasure Craft Marine Engine)

 Copyright © 2004 DETROIT DIESEL CORPORATION

6. Seal the turbocharger compressor inlet and discharge with covers or masking tape. Plug the oil supply fitting in the turbocharger housing.
7. Remove and inspect the exhaust manifold if necessary. Refer to section 7.2.2 and refer to section 7.2.3.1. See Figure 1-29, and see Figure 1-30.

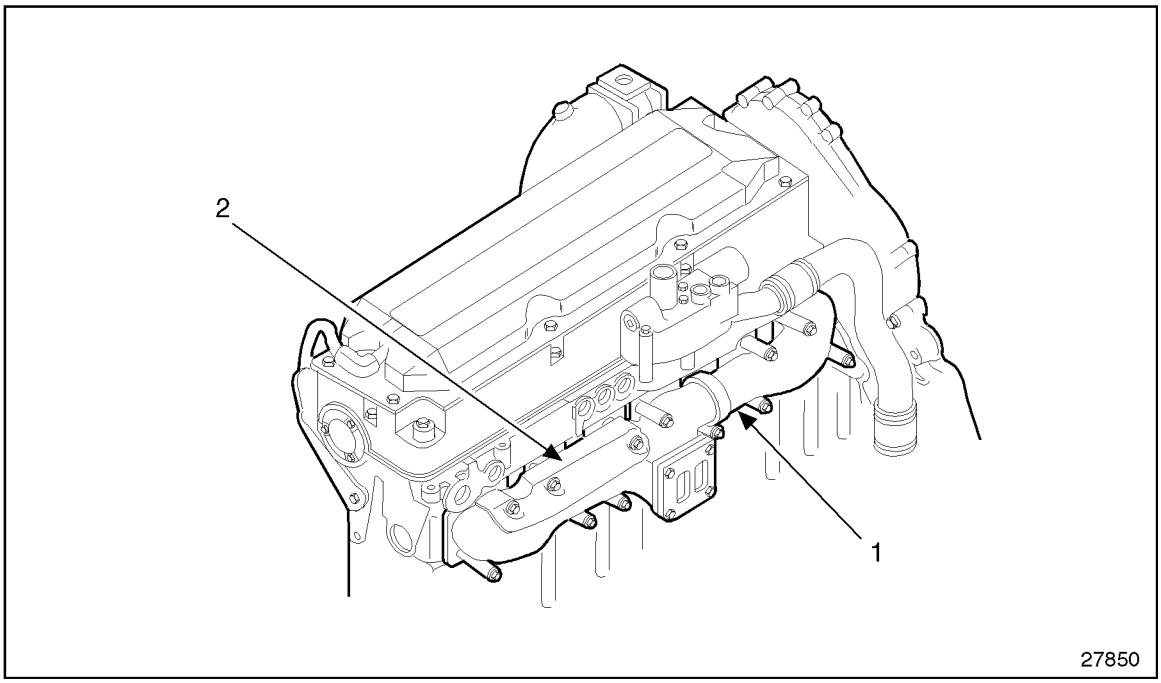

1. Exhaust Manifold
2. Heat Shield

Figure 1-29 Exhaust Manifold (Series 60G Engine)

(Rev. 2004) *All information subject to change without notice.*
6SE483 0401 Copyright © 2004 DETROIT DIESEL CORPORATION

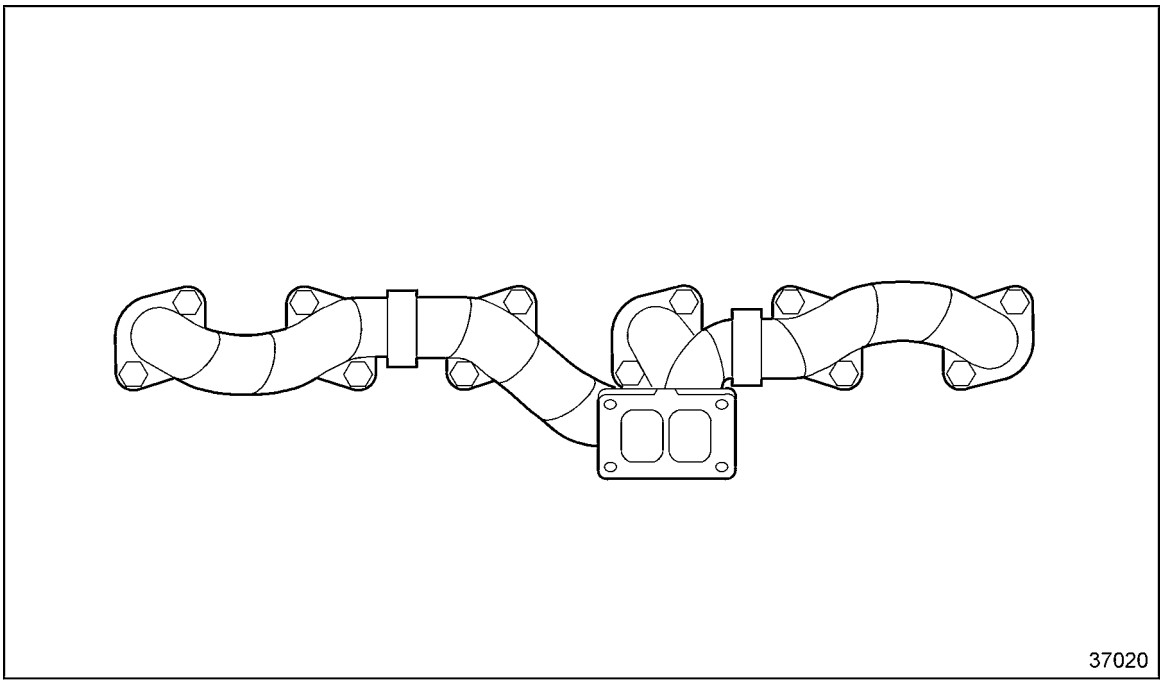

Figure 1-30 Exhaust Manifold (Series 60 Commercial Marine Engine)

 Copyright © 2004 DETROIT DIESEL CORPORATION

8. Remove and inspect the intake manifold. Refer to section 6.4.2and refer to section 6.4.3.1. See Figure 1-31for all diesel except pleasure craft marine. See Figure 1-28 for pleasure craft marine and see Figure 1-32 for natural gas.

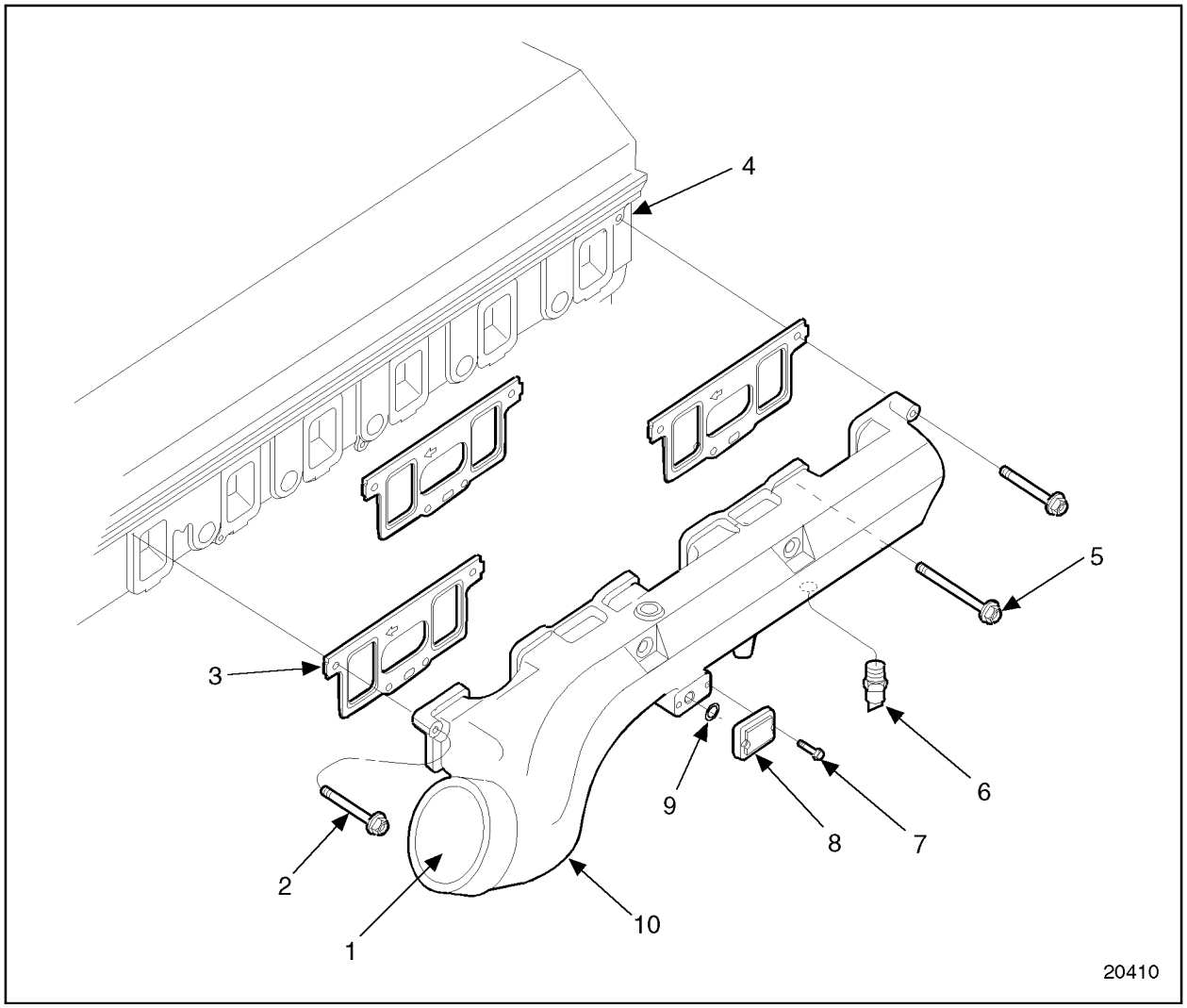

1. Air Inlet
2. Short Bolt (2)
3. Intake Manifold Gasket (3)
4. Cylinder Head
5. Manifold Bolt (7)
6. Air Temperature Sensor
7. Turbo Boost Pressure Sensor Bolt (2)
8. Turbo Boost Pressure Sensor
9. O-ring
10. Intake Manifold

Figure 1-31 Intake Manifold and Related Parts (All Diesel Except Heat Exchanger-Cooled Pleasure Craft Marine)

(Rev. 2004) *All information subject to change without notice.*
6SE483 0401 Copyright © 2004 DETROIT DIESEL CORPORATION

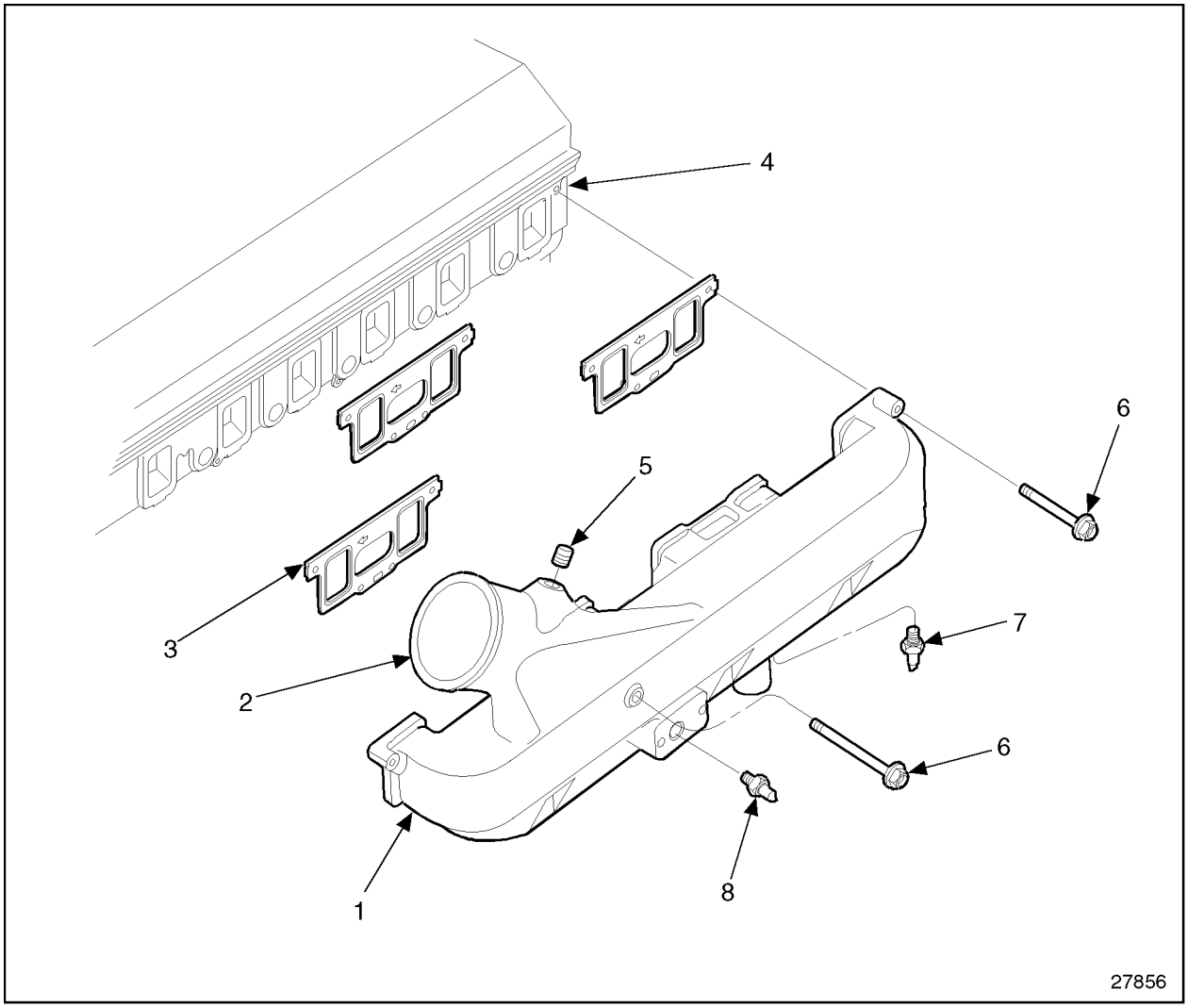

1. Intake Manifold
2. Intake Manifold Inlet
3. Intake Manifold Gasket
4. Cylinder Head
5. Pipe Plug
6. Bolt
7. Air Temperature Sensor
8. Turbo Boost Pressure Sensor

Figure 1-32 Intake Manifold and Related Parts (Natural Gas)

 Copyright © 2004 DETROIT DIESEL CORPORATION

9. Open the drain cock location at the bottom of the thermostat housing to allow the coolant in the housing to drain.
10. Disconnect radiator or heat exchanger, bypass pipe and hose clamps, and remove the thermostat housing. Refer to section 4.5.2and see Figure 1-33.

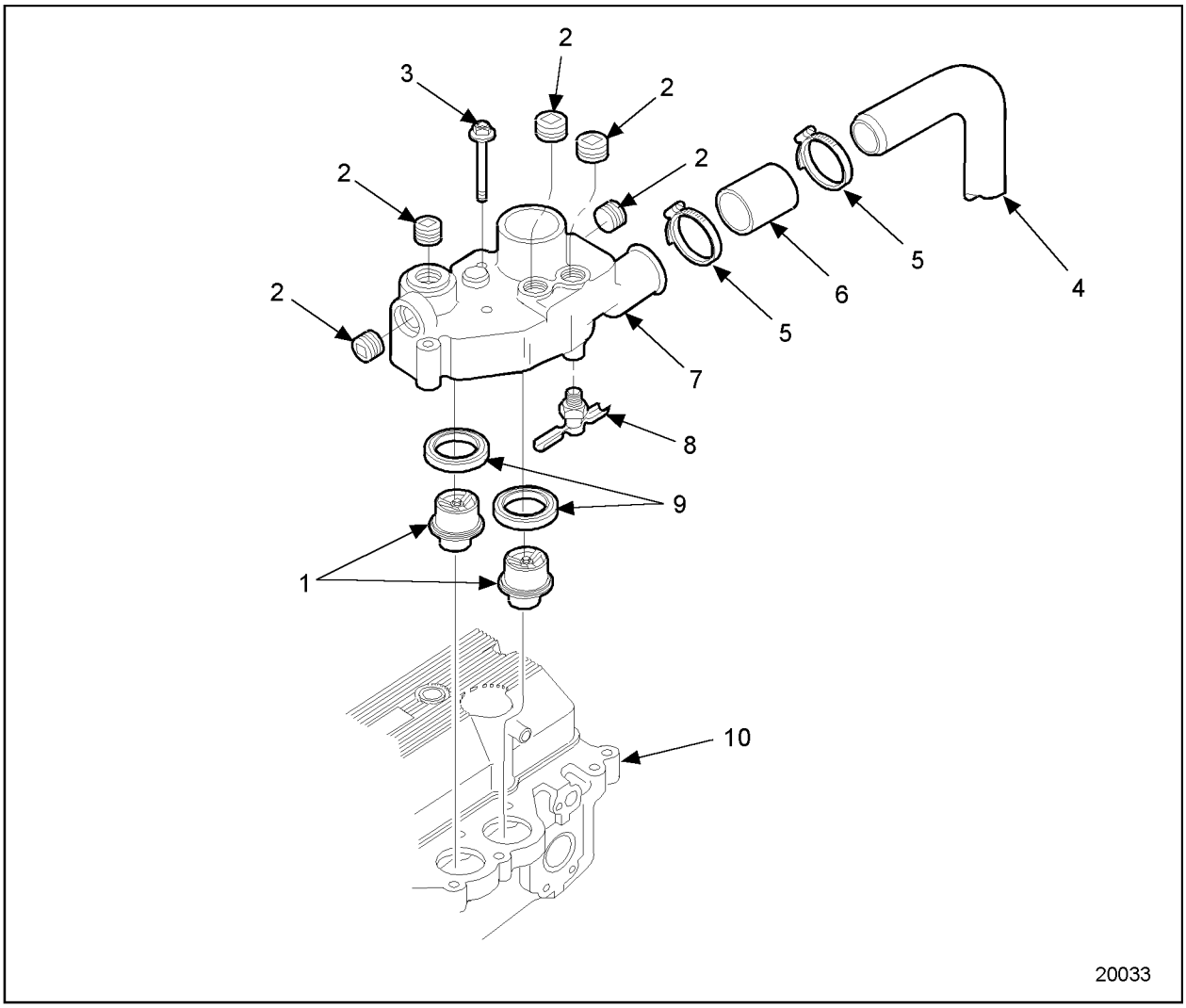

1. Thermostat (2)
2. Pipe Plug
3. Bolts, Thermostat Housing-to-Cylinder Head (4)
4. Hose, Coolant
5. Hose Clamps (2)
6. Bypass Tube
7. Thermostat Housing
8. Drain Cock
9. Seals, Thermostat Housing (2)
10. Cylinder Head

Figure 1-33 Thermostat Housing Removal

(Rev. 2004) *All information subject to change without notice.*
6SE483 0401 Copyright © 2004 DETROIT DIESEL CORPORATION

11. Remove, disassemble, and inspect the valve rocker cover. Refer to section 1.6.2, (one-piece), refer to section 1.6.3, (two-piece), refer to section 1.6.5, (three-piece) for removal. Refer to section 1.6.6 for disassembly, and refer to section 1.6.2.1for inspection.
12. Remove Jake Brakes®, if equipped. Refer to section 1.30.2.
    Jake Brake® is a registered trademark of Jacobs Vehicle Systems.
13. Remove rocker arm assemblies. Refer to section 1.3.2.

NOTE:
On heat exchanger-cooled pleasure craft marine engines the heat exchanger must be removed before the camshaft can be disassembled from the engine. Refer to section 4.12.2.

14. Remove the camshaft. Refer to section 1.24.2.

NOTE:
Using the camshaft gear pilot tool, J 35906, pull the camshaft gear and thrust plate forward in the gear case until there is approximately a 6.35 mm (1/4 in.) gap between the cylinder head and the diamond-shaped camshaft thrust plate seal when removing the cylinder head. See Figure 1-34.

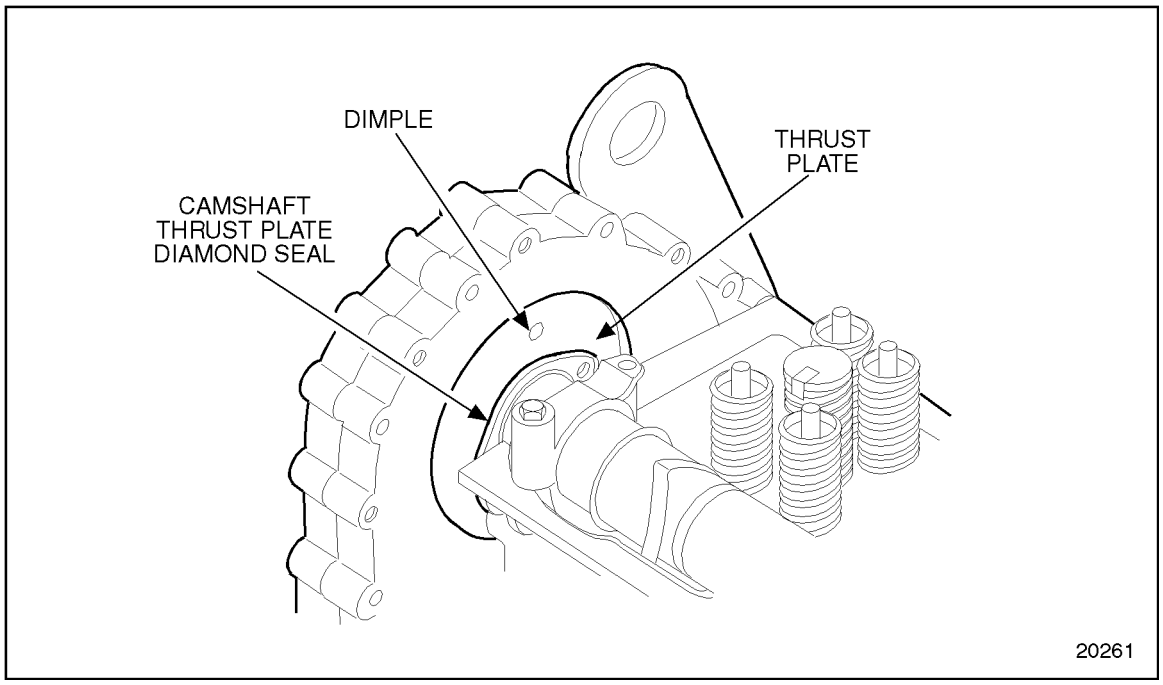

Figure 1-34 Positioning Camshaft Thrust Plate

15. Inspect the rocker arm assemblies and camshaft lobes. Refer to section 1.3.2.2, and refer to section 1.24.3.1.

 Copyright © 2004 DETROIT DIESEL CORPORATION

16. Disconnect the fuel inlet and outlet lines at the rear of the cylinder head. See Figure 1-35.

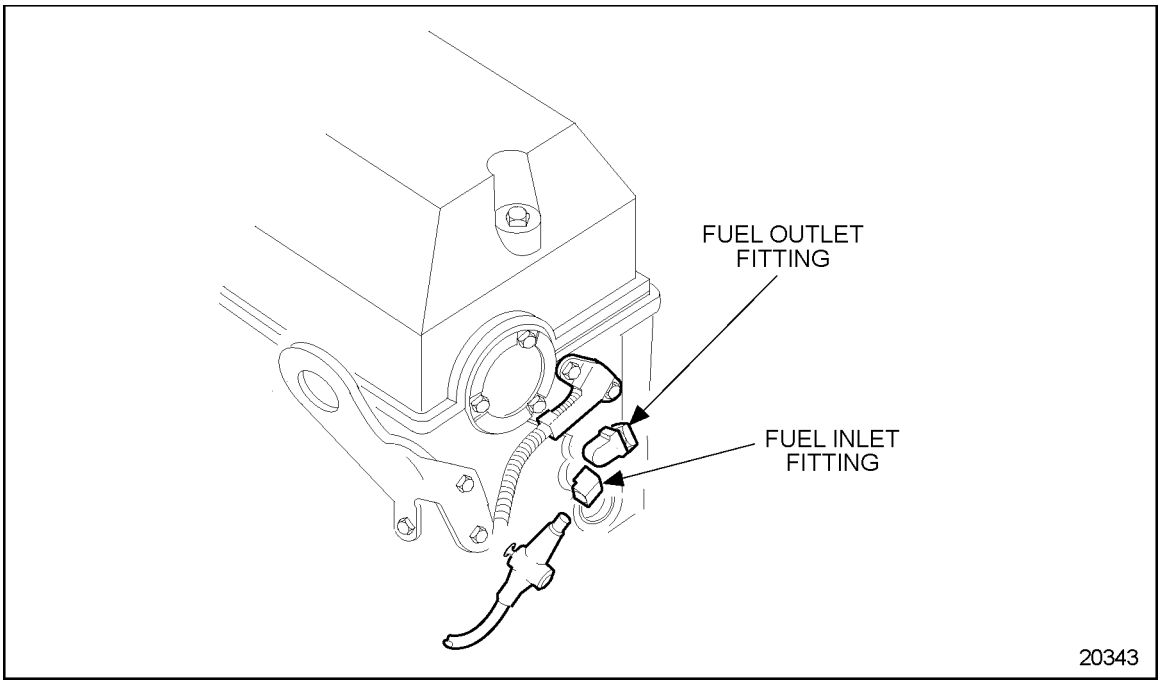

Figure 1-35 Removing Fuel from Cylinder Head Internal Passages

CAUTION:

To avoid injury from flying debris when using compressed air, wear adequate eye protection (face shield or safety goggles) and do not exceed 40 psi (276 kPa) air pressure.

17. Blow low pressure compressed air into the inlet fitting for 20 to 30 seconds or until all of the fuel is purged from the cylinder head.
18. Disconnect the injector wire harness at each injector. Refer to section 2.3.2.
19. Remove the harness mounting flange from the rear of the cylinder head and carefully remove the harness from the head by pulling the harness through the hole in the cylinder head. See Figure 1-25.

(Rev. 2004) *All information subject to change without notice.*
6SE483 0401 Copyright © 2004 DETROIT DIESEL CORPORATION

NOTICE:
To avoid possible damage to the injector spray tips, remove the injectors before lifting the head from the block. If the injectors are not removed, handle the head carefully when it is off the block and support the head fire deck on wooden blocks.

20. Remove the fuel injectors. Refer to section 2.3.2.

NOTE:
Fuel must be removed from the cylinder head fuel galleries prior to removing the injectors.

21. Remove the gear case stabilizer bracket at the right and/or left front corner of the head.
22. Remove the head bolts, refer to section 1.2.2, and install the cylinder head lifter bracket, J 35641-A, using the bolt hole at the inboard center, No. 3 cam cap and two tapped Jake Brake® bolt holes. See Figure 1-36.

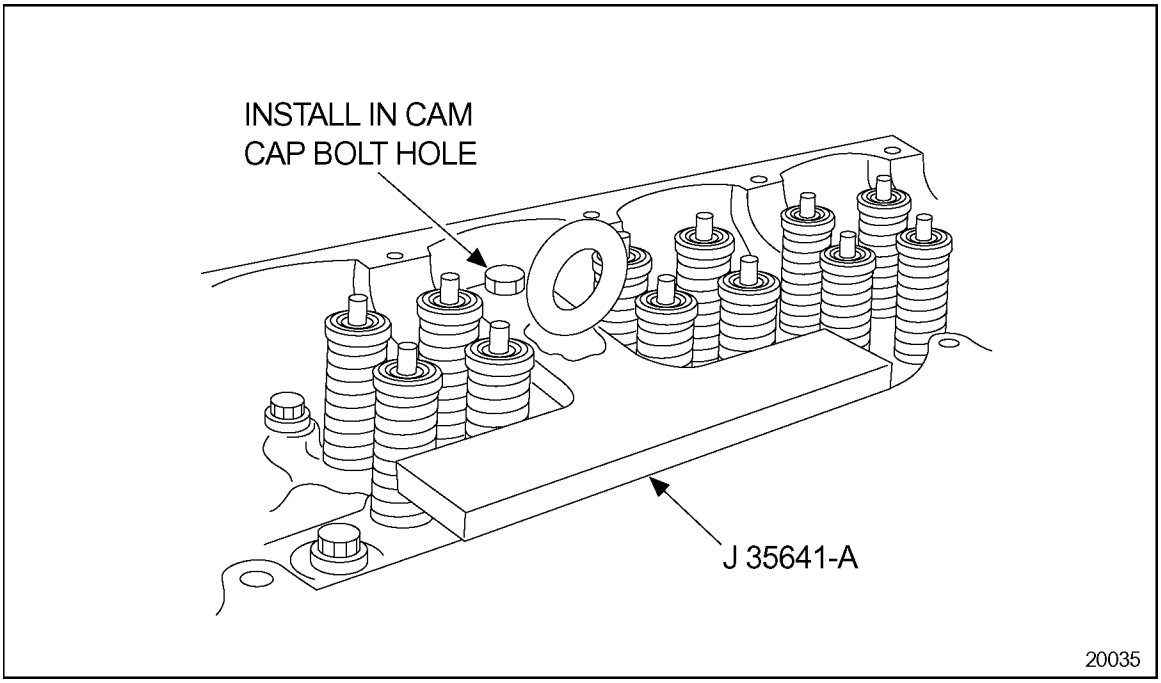

Figure 1-36 Cylinder Head Lift Bracket Removal

 Copyright © 2004 DETROIT DIESEL CORPORATION

23. Attach a suitable lifting hook to the eyelet in the lift bracket, and lifter the cylinder head off the engine. See Figure 1-37.

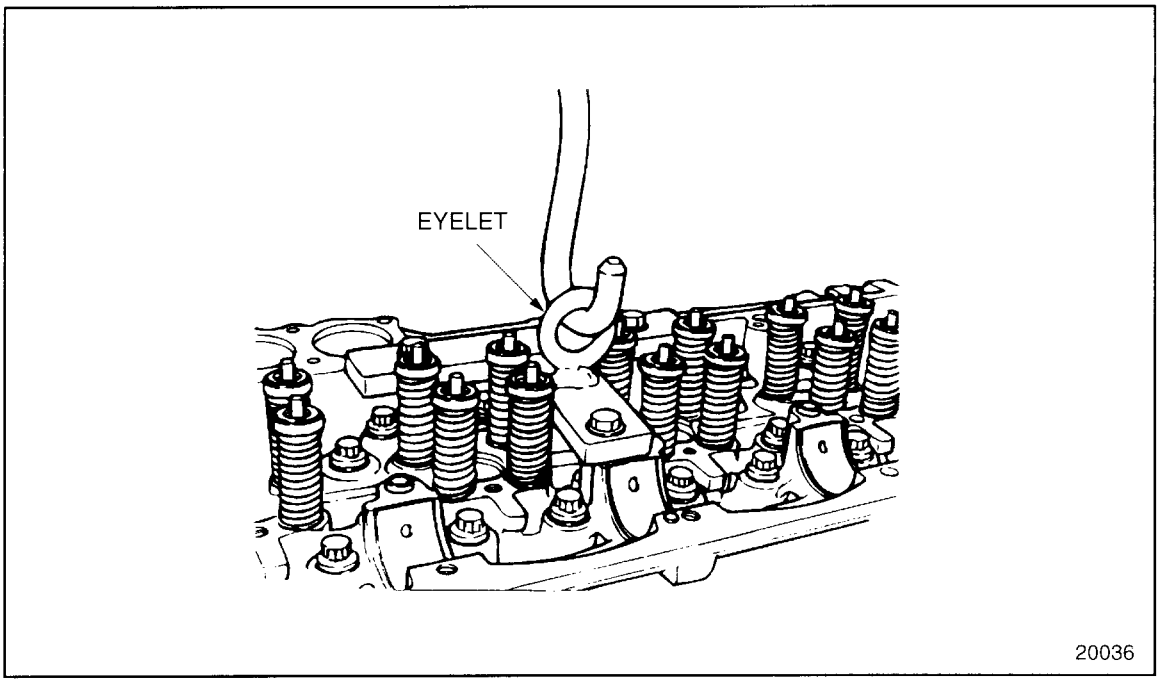

Figure 1-37 Cylinder Head Removal

24. Drain the engine lubricating oil, refer to section13.13.1, to remove any coolant that may have drained into the oil pan when the water jacket was opened. Remove any coolant from the cylinder bores.

(Rev. 2004) *All information subject to change without notice.*
6SE483 0401 Copyright © 2004 DETROIT DIESEL CORPORATION

1.2.3 Cleaning of Cylinder Head

Clean the cylinder head as follows:

1. Keep parts segregated according to original position to assure proper reassembly, if parts are to be reused.
2. Remove all threaded plugs.
3. Steam clean the cylinder head once it has been stripped.
4. If coolant passages are heavily coated with scale, remove the injector tubes and cup plugs, refer to section 2.4.2. Clean the head in a descaling bath, refer to section 1.2.2.

CAUTION:

To avoid injury from flying debris when using compressed air, wear adequate eye protection (face shield or safety goggles) and do not exceed 40 psi (276 kPa) air pressure.

5. Clean the camshaft and camshaft bearings, valves, springs, valve rotators and rocker shafts in fuel oil and blow dry with compressed air.
6. Clean the rocker arm assemblies.

1.2.3.1 Inspection of Cylinder Head

The following steps must be performed before inspecting the cylinder head:

1. Replace the plugs removed for cleaning. If the old plugs are reused, coat the plugs with Loctite® PT-7260 , pipe sealant with Teflon, or equivalent.

NOTE:
If both front fuel galley plugs have been removed, it will be necessary to replace both plugs.

2. If injector tubes have been removed, install new injector tubes. Refer to section 2.4.1.
3. Install new cup plugs using a good grade non-hardening sealant such as Loctite® 620 or equivalent.
4. Perform the following tests for cylinder head inspection.
   [a] Pressure test, refer to section 1.2.3.2.
   [b] Firedeck straightness test, refer to section 1.2.3.3.

 Copyright © 2004 DETROIT DIESEL CORPORATION

1.2.3.2 Pressure Testing of Cylinder Head

Perform the following steps to pressure test the cylinder head:

1. Install the test strips (part of cylinder block pressure test kit, J 36223) to the firedeck on the cylinder head. See Figure 1-38.

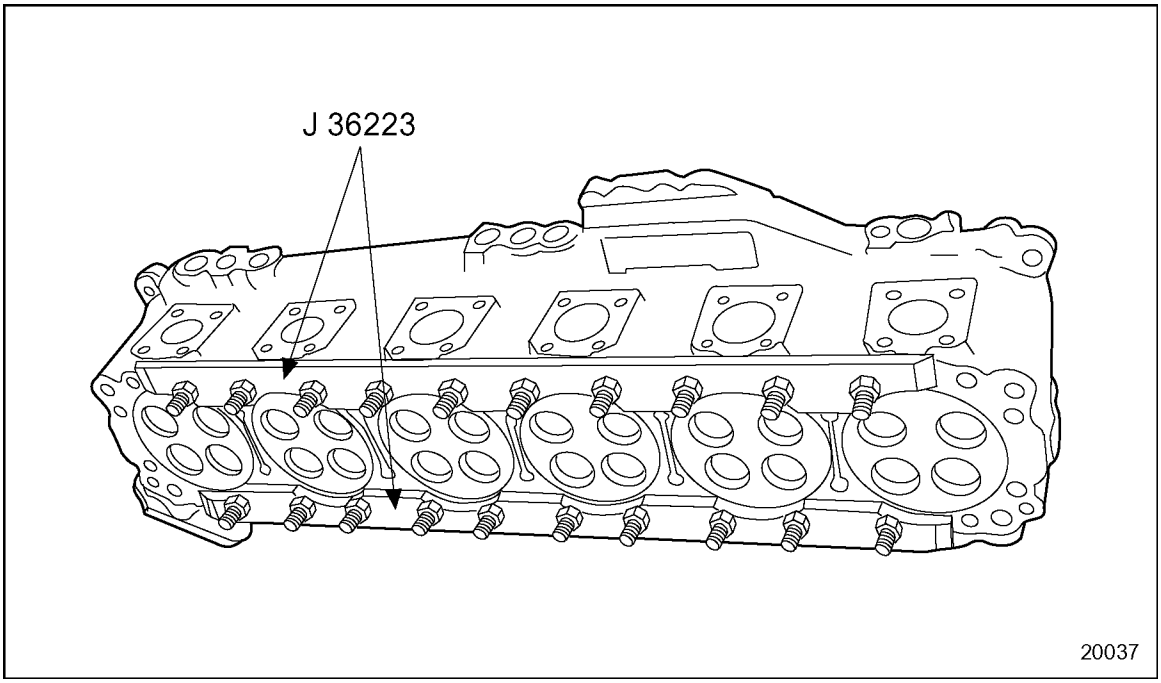

Figure 1-38 Cylinder Head Pressure Test Equipment Installation

2. Insert the cylinder head bolts through the cylinder head and test strips. Attach and torque the nuts (supplied in J 36223) to 14 N·m (10 lb·ft).

(Rev. 2004) *All information subject to change without notice.*
6SE483 0401 Copyright © 2004 DETROIT DIESEL CORPORATION

3. Install the thermostat opening cover plate, and gasket to the cylinder head using the bolts provided with the cover plate. See Figure 1-39.

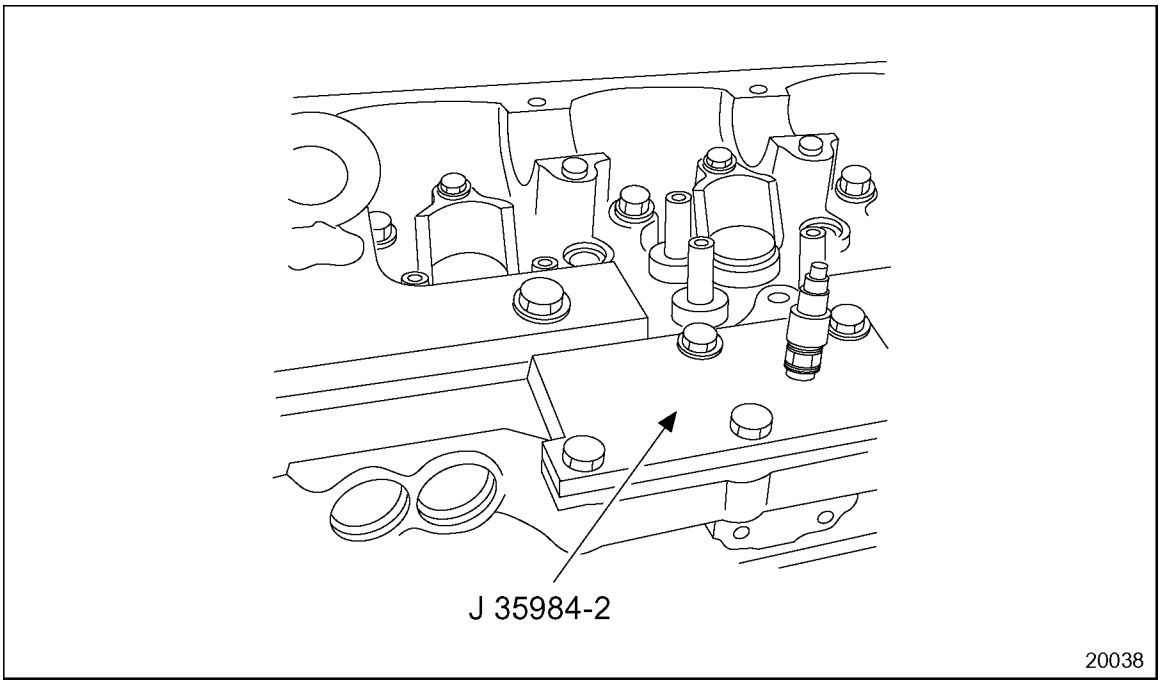

Figure 1-39 Thermostat Opening Cover Plate Installation

 Copyright © 2004 DETROIT DIESEL CORPORATION

4. Install dummy fuel injectors, to the injector bores to assure proper seating of the fuel injector tubes. See Figure 1-40.

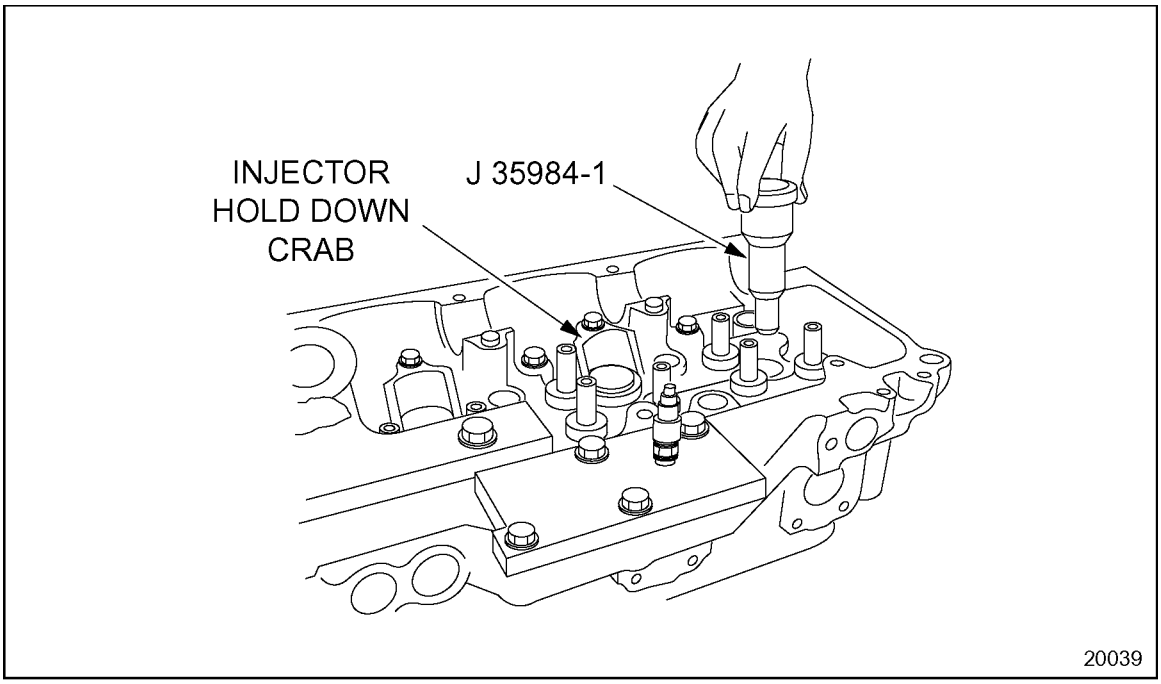

Figure 1-40 Dummy Fuel Injector Installation

5. Install the fuel injector crabs and hold-down bolts. Torque the bolts to 58-66 N·m (43-49 lb·ft). See Figure 1-40.
6. Attach an air hose to the fitting on the thermostat opening cover plate.
7. Apply 207 kPa (30 lb/in.^{2}) air pressure to the cylinder head and immerse the head in a water bath heated to 82-93°C (180-200°F).
8. Leave the head in the bath for at least 20 minutes to heat thoroughly, while watching for bubbles indicating a crack or leak.
   [a] If an injector tube leaks, replace tube(s). Refer to section 2.4.1for removal and refer to section 2.4.6for installation of new injector tube.
   [b] If a cracked cylinder head is detected, replace the cylinder head. Refer to section 1.2.5.

(Rev. 2004) *All information subject to change without notice.*
6SE483 0401 Copyright © 2004 DETROIT DIESEL CORPORATION

1.2.3.3 Inspection and Rework for Firedeck Straightness

The large mass and length of the head casting may contain longitudinal warp after it is unbolted and removed from the engine block. At the time of factory manufacture, the longitudinal warp is normalized by using a fixture and clamping the casting during machining. The casting is placed in a fixture and clamped from its locating surfaces (datums). When unclamped, the head casting resumes its original shape until it is bolted and tightened to the engine block.

Inspect the bottom (firedeck) of the cylinder head for straightness as follows:

1. Use a heavy, accurate straight-edge and feeler gages to check for transverse and longitudinal warpage. See Figure 1-41.

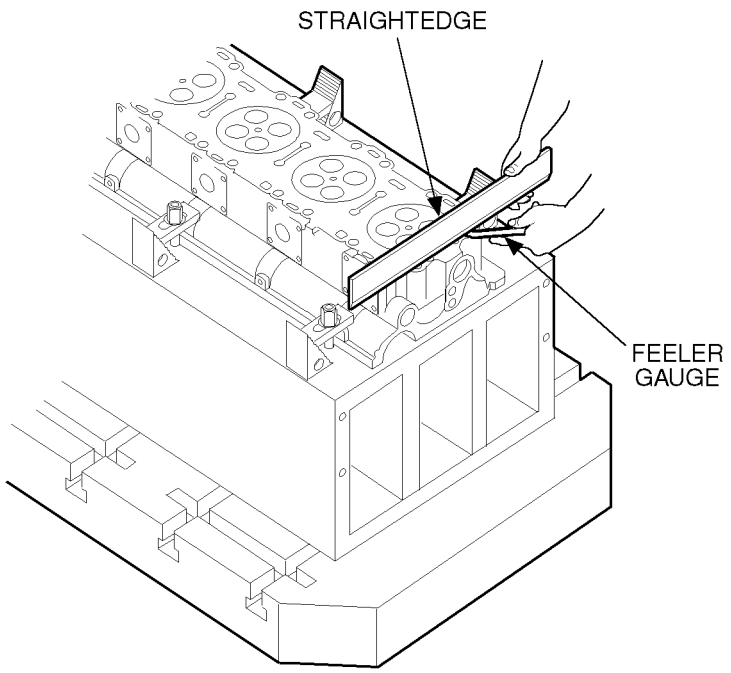

Figure 1-41 Checking Firedeck Straightness

 Copyright © 2004 DETROIT DIESEL CORPORATION

2. Also, check for longitudinal warpage in five places and transverse warpage in 12 places, indicated as A through L in the next illustration. See Figure 1-42.

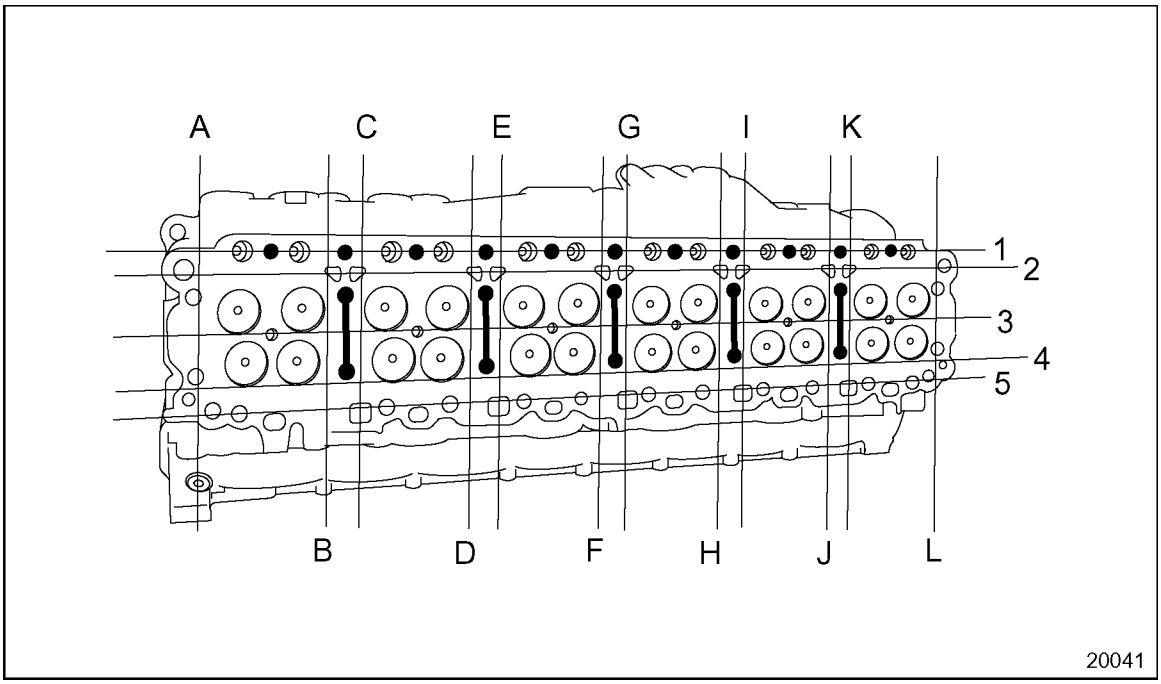

Figure 1-42 Cylinder Head Measurement Locations

3. The natural warp contained in the casting must be considered when inspecting firedeck straightness with the head unbolted and unclamped. Natural warpage is not a cause for correction. The firedeck (unclamped) must be straight within 0.279 mm (0.011 in.) front-to-rear and 0.076 mm (0.003 in.) side-to-side. Cylinder head specifications are listed in Table 1-33.

If the cylinder head flatness is outside of the specifications, Detroit Diesel Corporation recommends replacing the cylinder head.

(Rev. 2004) *All information subject to change without notice.*
6SE483 0401 Copyright © 2004 DETROIT DIESEL CORPORATION

1.2.3.4 Verification of Countersink Geometry

To verify countersink geometry, perform the following steps.

1. Install new injector tubes. Refer to section 2.4.6.
2. Place valves into proper location and check to be sure that valve heads are recessed from the firedeck surface by at least 1.4-1.8 mm (0.055 -0.071 in.). Listed in Table 1-33. See Figure 1-43. If not, reduced-thickness valve seat inserts must be installed. Refer to section 1.4.6.

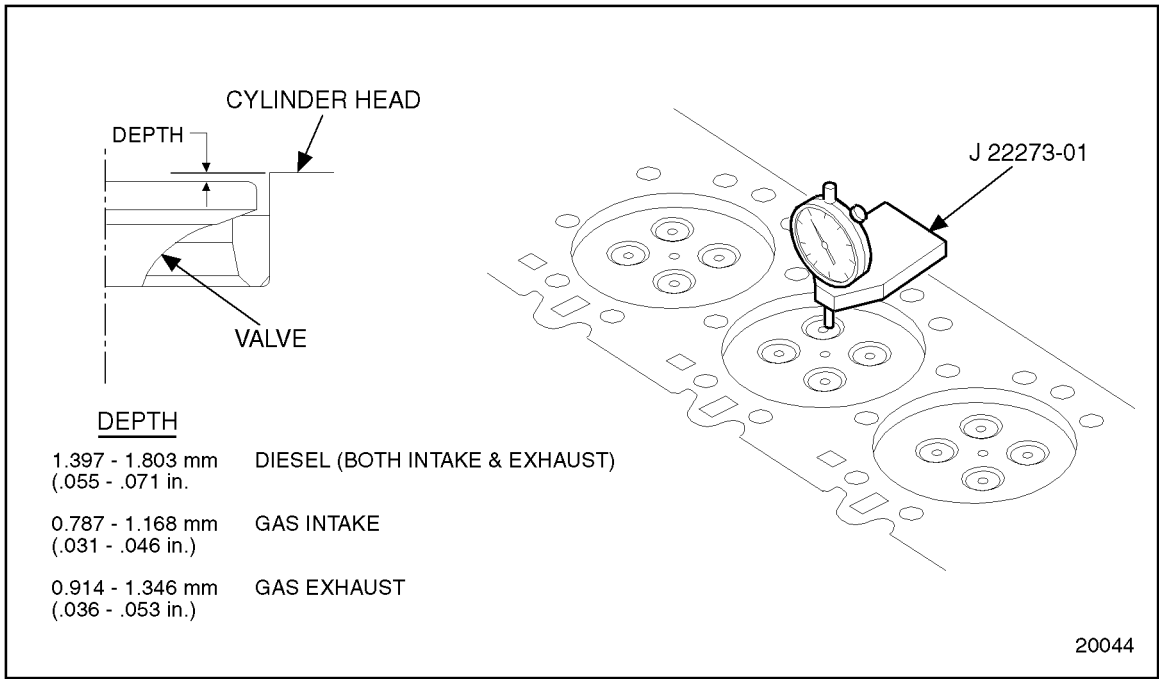

Figure 1-43 Valve Head-to-Cylinder Head Measurement

 Copyright © 2004 DETROIT DIESEL CORPORATION

1.2.3.5 Inspection and Reworking of Head Bolt Counterbore

To assure clean and non-brinnelled cylinder head bolt counterbores, use J 38189 to resurface the head bolt washer area.

The procedure and steps for proper use of the tool are as follows:

NOTICE:
There must be no space between the bottom of the cylinder head and the table top to properly resurface the counterbores.

1. Place the cylinder head on a solid flat surface (preferably a steel table top) that completely covers the bottom of head.

NOTICE:
Proper use of the J 38189 is important. Failure to use J 38189 properly may result in an incorrect counterbore depth.

2. Protect the valve springs and injector counterbore to keep any loose metal shavings from getting into valve springs and counterbore during cutting operation.
3. With cylinder head on a flat surface using the 1/8 in. hex wrench supplied with tool, loosen the stop collar and cutter to permit sliding on pilot.
4. Starting at the front of the cylinder head, place the pilot of the cutter into a cylinder head bolt hole until the pilot contacts the flat surface beneath the cylinder head.
5. Allow the cutter to contact the counterbore surface. Lock the stop collar while against the cutter. The cutter now will resurface the counterbore 0.508 mm (0.020 in.).
6. Remove the tool and place a 0.020 in. feeler gage between the cutter and the locked stop collar.
7. With feeler gage in place, lock the set screw of the cutter, then remove the feeler gage and loosen the set screw on the stop collar and slide it down tight against the cutter and retighten.

Perform the following steps to resurface the counterbore 0.508 (0.020 in.):

1. Using a drill motor with a 1/2 in. chuck and a **maximum** of 450 r/min and a suitable cutting oil to prolong the life of the cutter and to lubricate the pilot turning in bolt hole,
2. Apply a moderate pressure on the drill motor, continue cutting operation until pilot bottoms on flat surface and then do not stop drill motor until after being lifted from cutting surface. This is to eliminate surface marks.

NOTE:
The J 38189 tool pilot has a shoulder stop that will not allow the cutter to remove material in excess of the Detroit Diesel Corporation specifications.

(Rev. 2004) *All information subject to change without notice.*
6SE483 0401 Copyright © 2004 DETROIT DIESEL CORPORATION

3. If some of the bolt holes do not clean up completely, continue resurfacing remaining holes, repeating the operation in. 0.005 in. increments. This will clean up any holes that may not have cleaned up completely during the first cut.
4. After all counterbores have been resurfaced, remove any loose cutting chips.
5. Steam clean the complete cylinder head.
6. After steam cleaning, inspect the cylinder head for any remaining chips.
7. Reinstall the cylinder head assembly, using 38 of the new ground head bolt washers.

1.2.4 Assembly of Cylinder Head

Perform the following steps for cylinder head assembly:

CAUTION:

To avoid injury from flying debris when using compressed air, wear adequate eye protection (face shield or safety goggles) and do not exceed 40 psi (276 kPa) air pressure.

NOTICE:

If the cylinder head is to be replaced, the new head must be thoroughly cleaned before installation to remove all rust and preventive compound, especially from the fuel and oil galleries. This can be done by immersion in a bath of fuel oil or mineral-spirits-based solvent and scrubbing out all openings with a soft bristle brush. When clean, blow the head dry with compressed air.

1. Install new precoated pipe plugs or coat the used plugs with pipe sealant with Teflon, PT-7260, or equivalent. Refer to section ADDITIONAL INFORMATION1.A, "Engine Plug and Dowel Charts" for specifications.
2. Install all of the required cup plugs using a good grade of non-hardening sealant, such as Loctite® 620 or equivalent, on the cup plugs. Use cup plug installation tool set, J 35653. Refer to section ADDITIONAL INFORMATION1.A, "Engine Plug and Dowel Charts" for specifications.
3. Ensure that all cup and pipe plugs on the front face of the cylinder head are flush or below the surface.
4. Install valve guides and seats, valves, valve stem seals, valve springs and rotators. Refer to section 1.4.8and refer to section 1.4.7.

 Copyright © 2004 DETROIT DIESEL CORPORATION

1.2.5 Installation of Cylinder Head

Perform the following steps for cylinder head installation:

1. Ensure piston domes and the cylinder head and cylinder block firedeck surfaces are clean and free of foreign matter. Inspect the head bolt holes in both block and head for the presence of oil, water, dirt, or damaged threads, clean or retap as necessary.

NOTE:
Series 60 Engines built after September 2002 will use a new cylinder head gasket. This gasket will be identified with a new part number and date code. This new gasket must be used with the new cylinder head bolts.

2. Position the head gasket on the block and install cylinder head guide studs, J 35784, at front and rear of the block. See Figure 1-44.

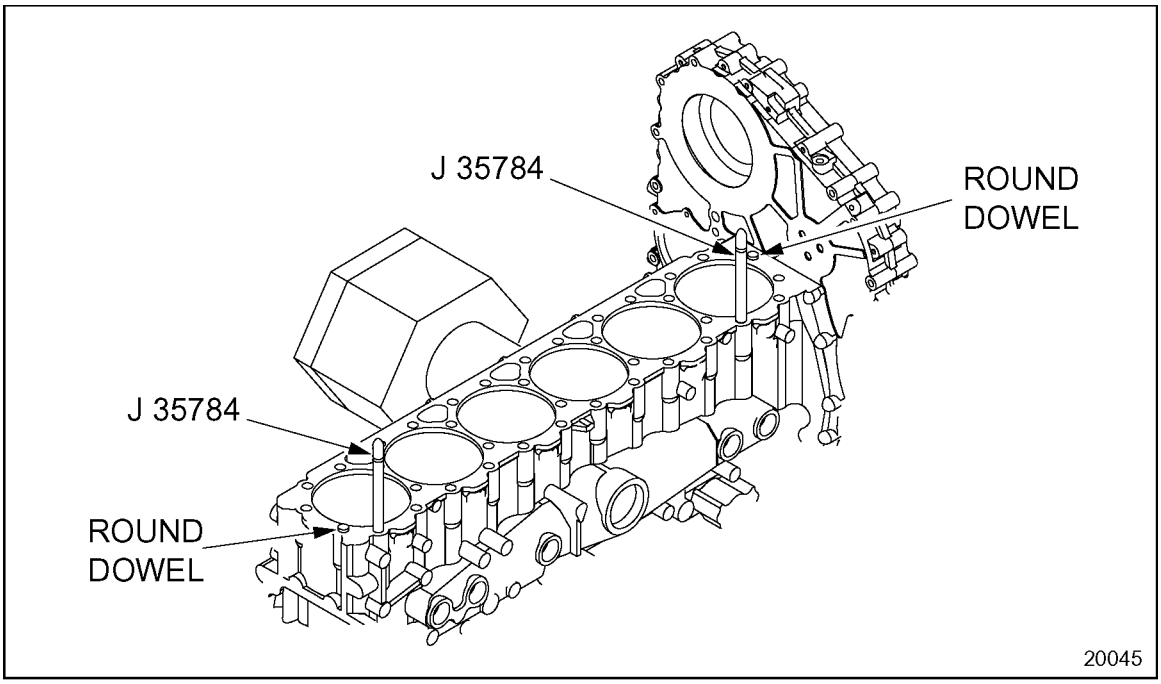

Figure 1-44 Cylinder Head Guide Studs

(Rev. 2004) *All information subject to change without notice.*
6SE483 0401 Copyright © 2004 DETROIT DIESEL CORPORATION

3. Lift the head into position with lift bracket, J 35641. See Figure 1-45. Lower it into place over the guide studs, J 35784, until it seats on the block deck dowels. See Figure 1-44.

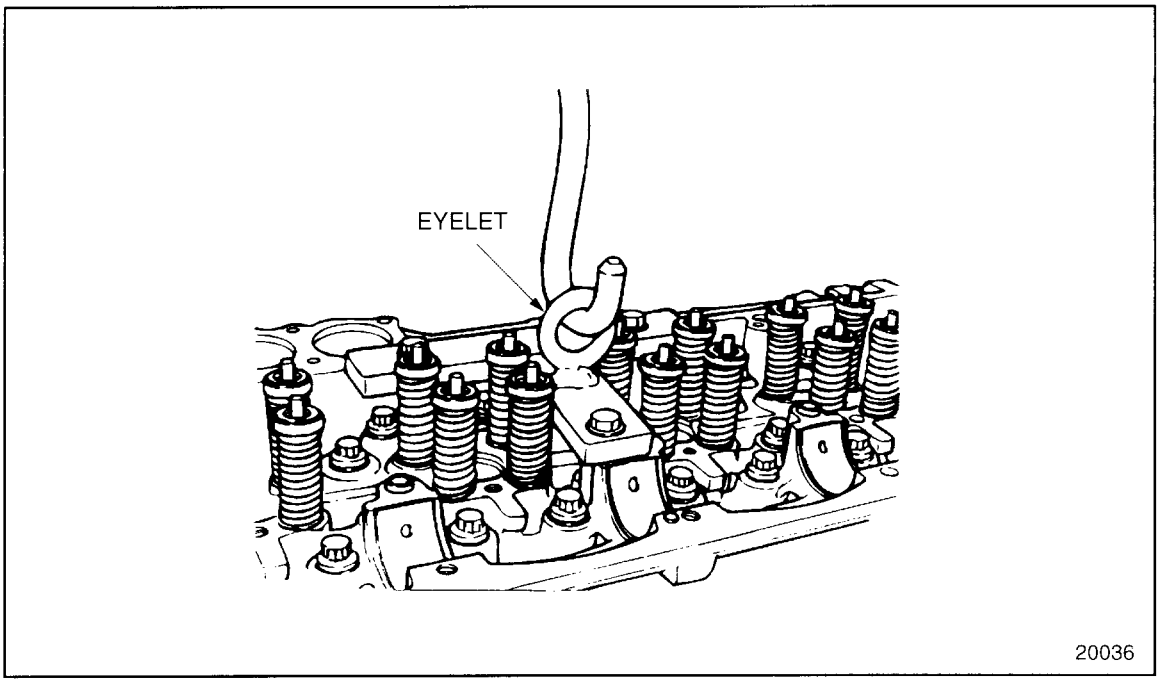

Figure 1-45 Cylinder Head Installation

4. Remove the guide studs.
5. Install the head bolts with special hardened washers, lubricating the threads and bolt-head contact areas with a small amount of International Compound #2®, or equivalent.

NOTICE:
Cylinder head mounting bolts are considered single-use items and must not be reused. Failure to install new bolts when replacing a cylinder head may result in improper bolt clamp load, which could cause gasket failure and severe engine damage.

6. Torque the head bolts to 250-285 N·m (185-210 lb·ft) in the following sequence. See Figure 1-46. After September 2002 a new cylinder head bolt will be used for all Series 60 Off-Highway and On-Highway engines. The new bolt will be identified with white paint and groove on top of bolt. See Figure 1-47. Torque the new head bolts to 298 N·m (220 lb·ft). There is no change to the procedure other than the new torque value. The new head bolt can be used with the former cylinder head gaskets, the former head bolts cannot be used with the new head gasket. Former and new bolts must not be mixed.

 Copyright © 2004 DETROIT DIESEL CORPORATION

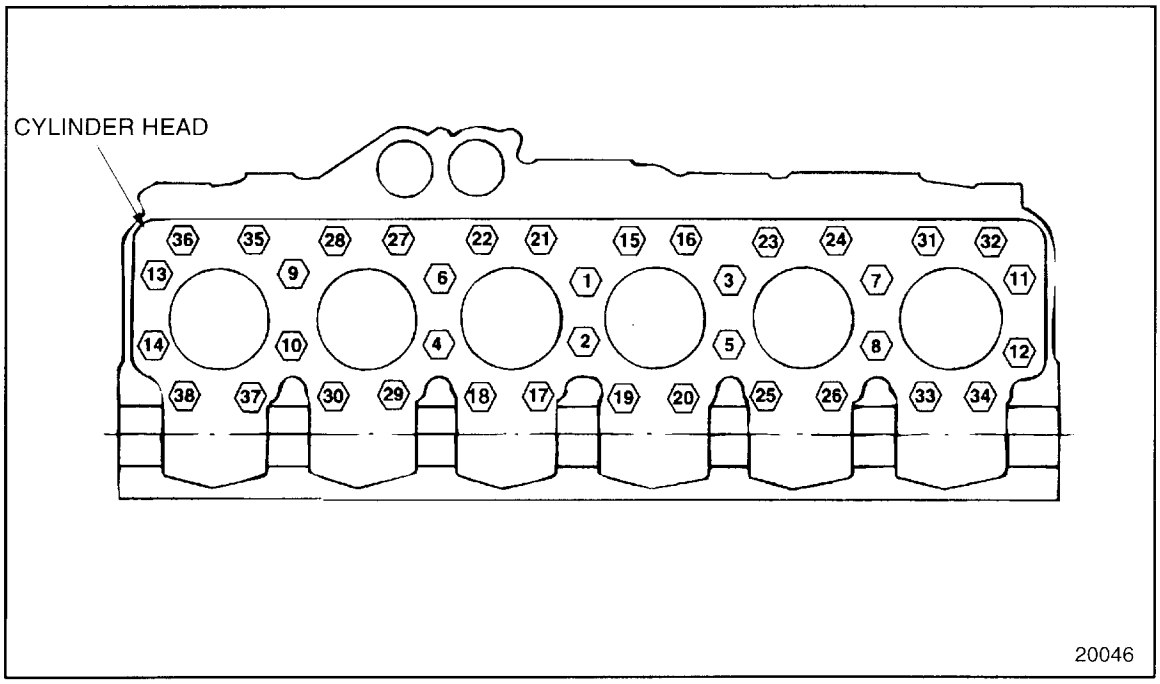

Figure 1-46 Cylinder Head Bolt Tightening Sequence

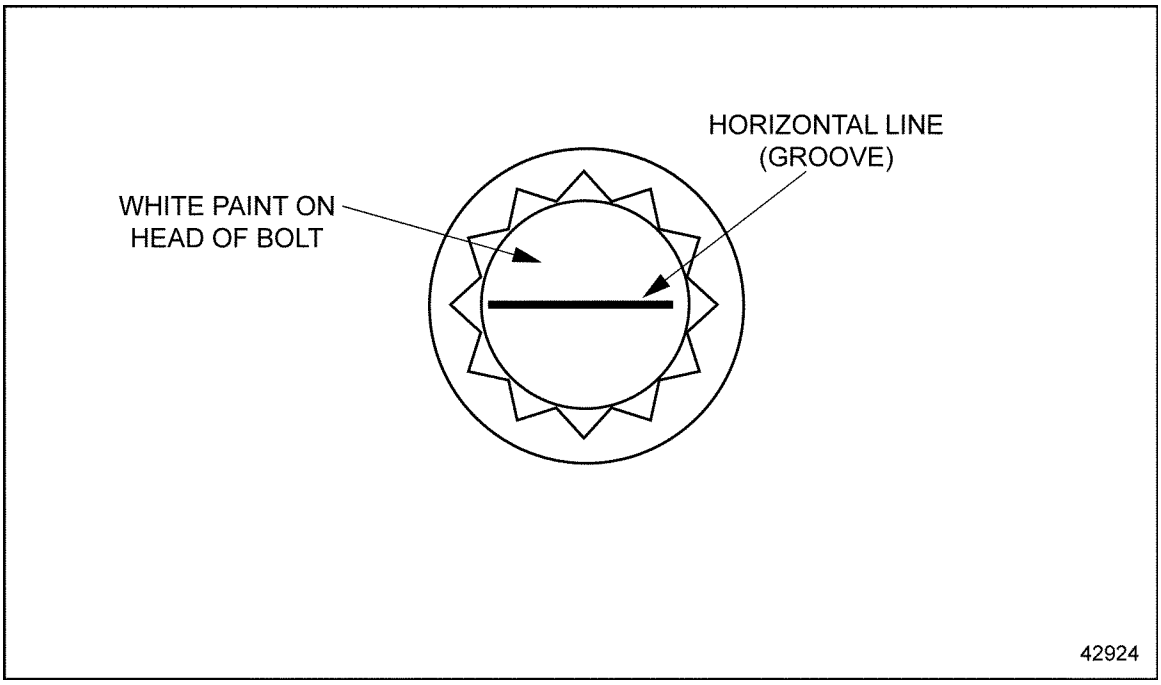

Figure 1-47 Bolt Identification For Series 60 Engines Built After September 2002

(Rev. 2004) *All information subject to change without notice.*
6SE483 0401 Copyright © 2004 DETROIT DIESEL CORPORATION

NOTICE:
Failure to repeat the cylinder head bolt torque tightening sequence can result in some head bolts losing their torque when others are tightened resulting in insufficient clamp load.

7. Repeat the torque sequence to verify all of the head bolts are torqued to specification.

NOTICE:
The hemispherical portion of the injector hold-down crab washers must be installed facing the crab (pointing down) in order to prevent damage to the washers. See Figure 1-48.

8. Visually inspect each injector hole tube to ensure they are clean. Install the fuel injectors. Refer to section 2.3.5. Be sure the injector hold-down crabs are clear of the valve and injector springs.

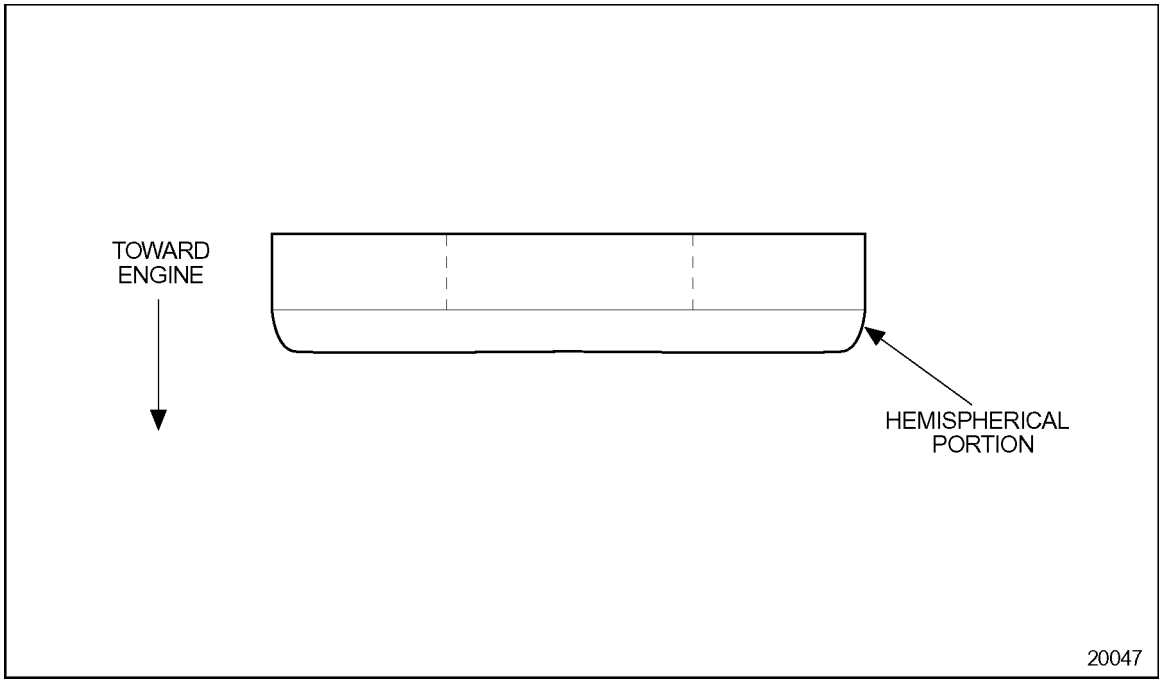

Figure 1-48 Injector Hold-Down Crab Washer Installation

9. Install the clamp bolts with hemispherical washers, torque to 58-66 N·m (43-49 lb·ft).
10. Install the camshaft. Refer to section 1.24.6.

NOTE:
If a cylinder head other than the one removed from the engine, or if a resurfaced cylinder head is being installed, the three nuts retaining the adjustable idler gear must be loosened before installing and torquing the camshaft drive gear retaining bolt.

 Copyright © 2004 DETROIT DIESEL CORPORATION

NOTICE:

The camshaft drive gear-to-adjustable idler gear lash must be measured/adjusted before the rocker arm shaft assemblies are installed.

11. Measure and adjust the camshaft drive gear-to-adjustable idler gear lash. Refer to section 1.22.2.1
12. Install the rocker arm shaft assemblies. Refer to section 1.3.3.
13. Install Jacob's Brake assemblies (if equipped). Refer to section 1.30.5.
14. Feed the injector harness wires through the opening at the rear of the cylinder head. Secure the harness mounting flange to the cylinder head by torque the bolts to 10-15 N·m (7-11 lb·ft).
15. Connect the injector harness wires to their respective injectors. Refer to section 2.3.5.

NOTICE:

Bolts attaching brackets to the gear case are torqued **first** then torque the bolt(s) to the cylinder head next.

16. Install the gear case stabilizer bracket at the right and/or left front corner of the head. Refer to section 1.11.3.
17. Install the thermostats and seals to the thermostat housing. Refer to section 4.5.5.
18. Clean the coolant outlet surfaces of the head and thermostat housing.
19. With the thermostats seated in the housing counterbores, install the housing to the cylinder head, torque the housing bolts to 58-73 N·m (43-54 lb·ft). Connect the radiator or heat exchanger and bypass hose couplings and vent line.
20. Remove all traces of the old gasket from the cylinder head and exhaust manifold joint surfaces. Install the exhaust manifold with new gaskets. Refer to section 7.2.4.
21. Clean the exhaust manifold and turbocharger joint surfaces and install the turbocharger with a new gasket. Refer to section 6.6.7. If turbocharger is water cooled, connect coolant supply and return lines.
22. Fill and vent the cooling system. Refer to section 13.13.4. Fill the engine lubrication system. Refer to section 13.13.1.
23. Connect the exhaust and air-to-air cooler air ducting and install the air cleaner or air separator.
24. Install any other components that were removed and fill with the required fluids, as recommended. Refer to OEM guidelines.

(Rev. 2004) *All information subject to change without notice.*
6SE483 0401 Copyright © 2004 DETROIT DIESEL CORPORATION

CAUTION:

Diesel engine exhaust and some of its constituents are known to the State of California to cause cancer, birth defects, and other reproductive harm.

- ☐ **Always start and operate an engine in a well ventilated area.**
- ☐ **If operating an engine in an enclosed area, vent the exhaust to the outside.**
- ☐ **Do not modify or tamper with the exhaust system or emission control system.**

25. Start the engine and check for fuel, coolant or oil leaks. Keep the engine running while you check.
26. Shut down the engine.

 Copyright © 2004 DETROIT DIESEL CORPORATION

1.3 VALVE AND INJECTOR OPERATING MECHANISM

The valve and injector operating mechanism is located entirely in the cylinder head.

The Series 60 overhead camshaft design eliminates the need for push rods. Separate camshaft followers are not needed, since the rocker arms incorporate follower rollers riding directly on the camshaft lobes, transmitting camshaft motion to the valves and injectors. See Figure 1-49.

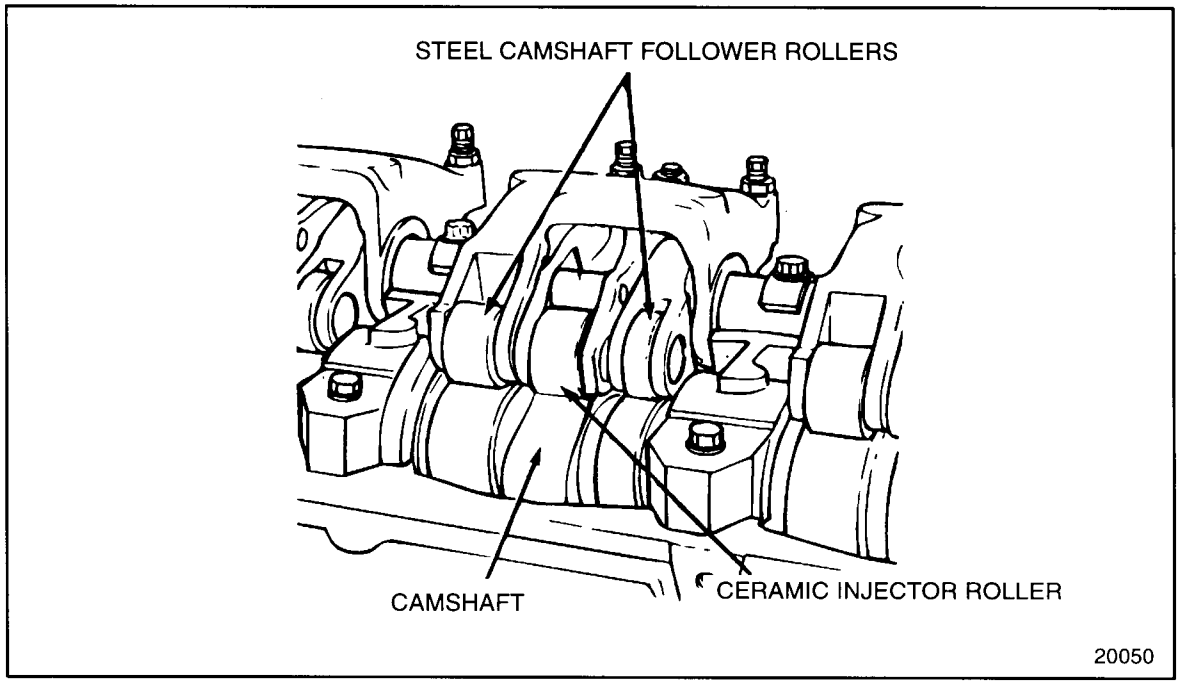

Figure 1-49 Camshaft and Related Parts

(Rev. 2004) *All information subject to change without notice.*
6SE483 0401 Copyright © 2004 DETROIT DIESEL CORPORATION

Each of the three rocker arm assemblies contain bushings where the rocker arms are supported on the rocker arm shafts. These bushings are not serviced separately. Each intake rocker arm assembly operates two intake valves in each cylinder. Each exhaust rocker arm assembly operates two exhaust valves in each cylinder. In each set of rocker arm assemblies, the exhaust rocker assembly is the widest, straddling the intake and fuel injector rocker arm assembly. The center rocker operates the fuel injector follower. See Figure 1-50.

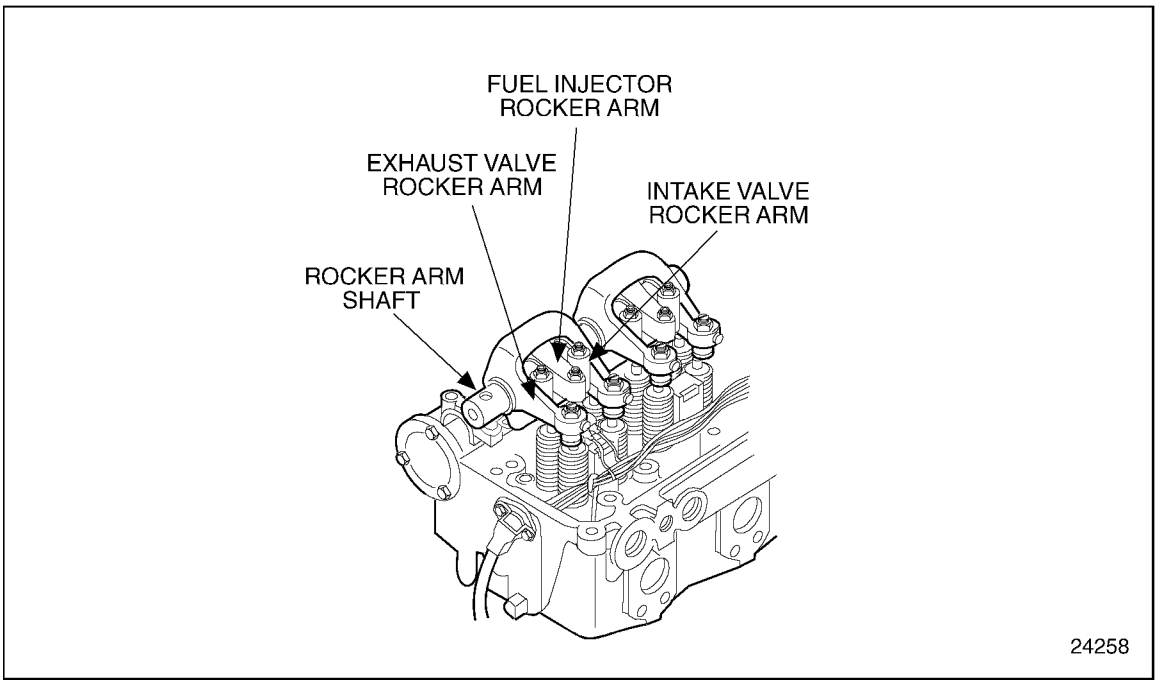

Figure 1-50 Rocker Arm Identification

 Copyright © 2004 DETROIT DIESEL CORPORATION

The fuel injector rocker arm assembly is located between the intake and exhaust rocker arm assemblies and has a single bushing (not serviced separately). A rocker arm shaft carries three sets of rocker arm assemblies and is mounted in seats machined into the camshaft bearing caps. See Figure 1-51and see Figure 1-52.

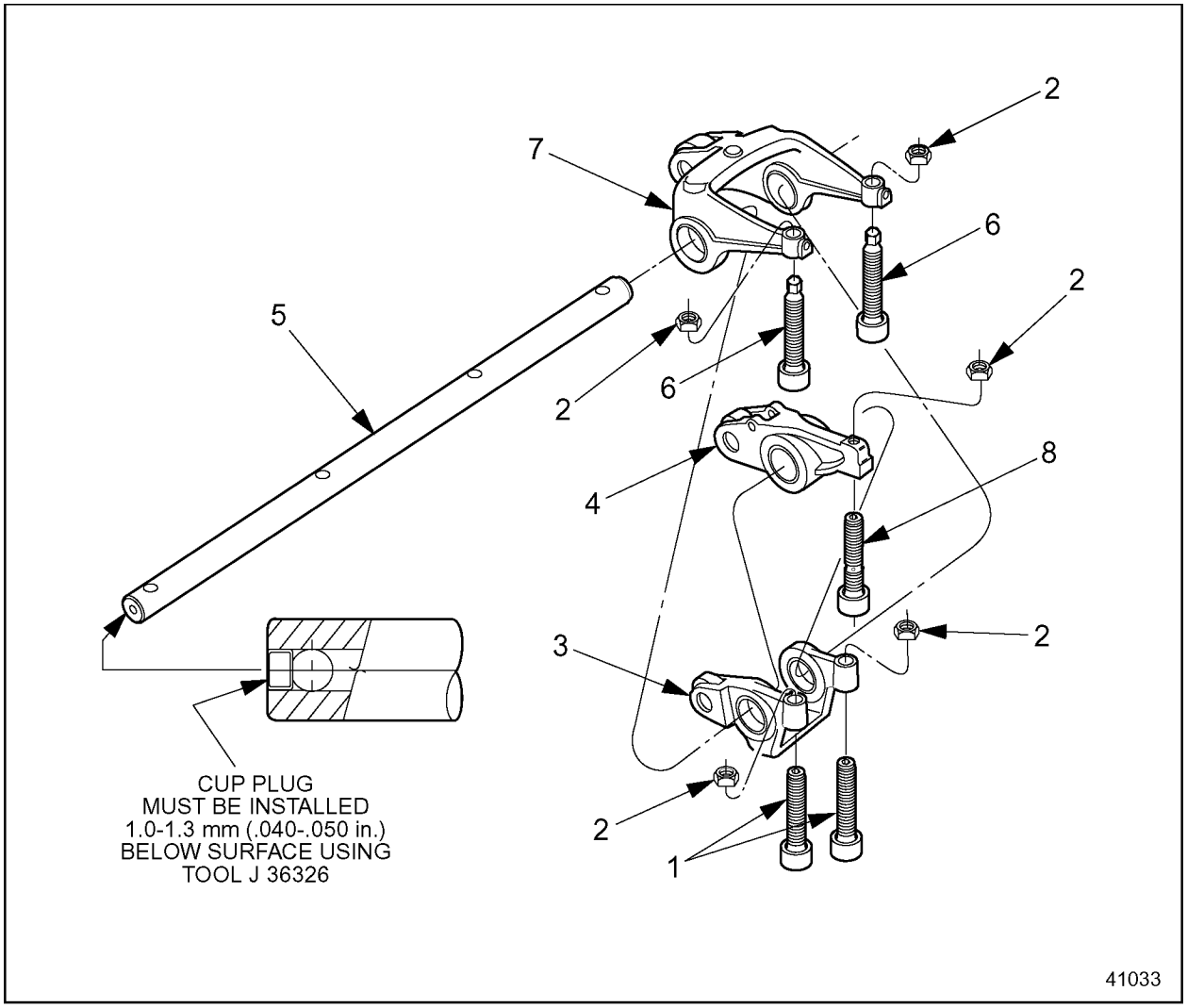

1. Unitized Valve Adjusting Screw Assembly; Intake position
2. Locknut
3. Intake Rocker Arm Assembly
4. Fuel Injector Rocker Arm Assembly
5. Rocker Arm Shaft
6. Unitized Valve Adjusting Screw Assembly; Exhaust position
7. Exhaust Rocker Arm Assembly
8. Unitized Valve Adjusting Screw Assembly; Injector position

Figure 1-51 Rocker Arm and Related Parts

(Rev. 2004) *All information subject to change without notice.*
6SE483 0401 Copyright © 2004 DETROIT DIESEL CORPORATION

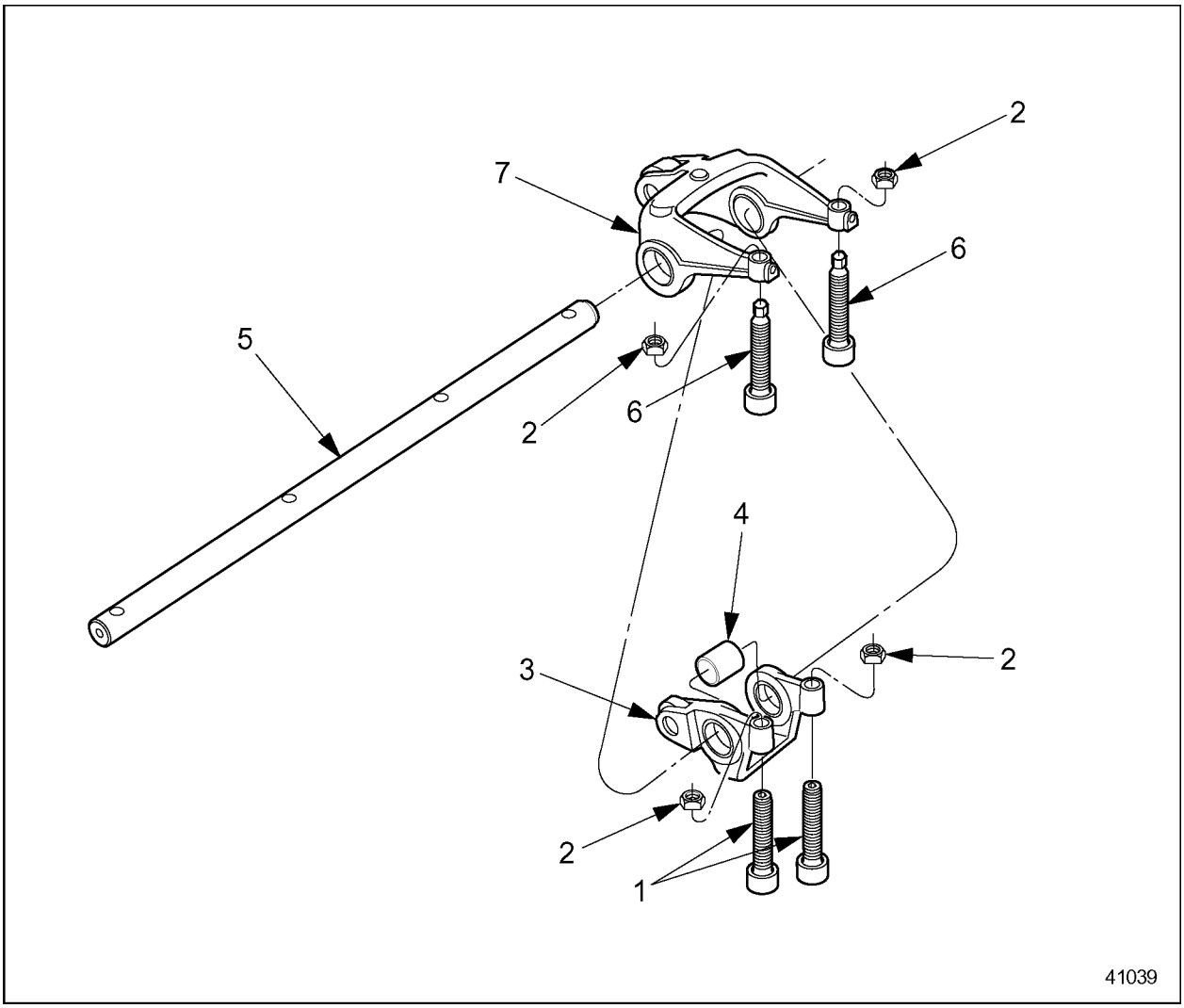

1. Unitized Valve Adjusting Screw Assembly; Intake position
2. Locknut
3. Intake Rocker Arm Assembly
4. Spacer
5. Rocker Arm Shaft
6. Unitized Valve Adjusting Screw Assembly; Exhaust position
7. Exhaust Rocker Arm Assembly

Figure 1-52 Rocker Arm and Related Parts (Series 60G Engine)

 Copyright © 2004 DETROIT DIESEL CORPORATION

A new injector rocker arm assembly replaced the former injector rocker arm assembly on all model 6067-GK60 engines beginning with serial number 06R0133091, and on all model 6067-GU60 and 6067-WU60 engines beginning with serial number 06R0157655.

NOTE:
When the current rocker is installed on a phosphated shaft, the shaft should be turned 180° to present a fresh phosphated area to the loaded region of the bushing.

The current assembly has a honed rocker arm shaft bushing, a ceramic cam follower and a new phosphated (black in color) rocker arm shaft which provides improved wear characteristics. The phosphated surface is required for the proper break-in of the steel rocker arm shaft bushings.

Current Series 60 engines have rocker arm shafts without flats at the mounting bolt locations. For these engines, a spacer is installed between the rocker arm shaft and the mounting bolts or nuts rather than a washer. This allows the rocker arm shaft to be rotated when installing new rocker arms. When reusing rocker arm assemblies, the rocker arm shaft should not be rotated so that the same surfaces of the rocker arm assemblies and rocker shafts are in contact with each other.

Vertical oil passages at the front and rear of the cylinder head deliver oil from the cylinder block front and rear oil galleries to the No. 1 and 7 lower camshaft bearing saddles. From there, the oil is directed upward (through the enlarged stud hole) to the No. 1 and 7 upper bearing caps. A drilled passage in each of these caps exits at the rocker arm shaft seat area, where it indexes with a hole in each rocker arm shaft.

The rocker arm shafts have internal oil passages that deliver oil to the rocker arm bushings and intermediate upper camshaft bearings. Some of the oil supplied to the rocker arm bushings passes through the oil hole in the bushing to the rocker arm assemblies. The rocker arm assemblies contain drilled passages that supply oil to the camshaft roller follower, the roller pin and the bushing. The rocker arm assemblies also contain drilled passages that supply oil to the unitized valve adjusting screw assembly and exhaust valve stems and the fuel injector follower.

NOTE:
In December 2000, a new unitized adjusting valve screw assembly now replaces the former valve adjusting screw, valve button and retainer clip.

The No. 4 camshaft cap is "Y" drilled, forming an oil path connection between the front and rear rocker arm shafts, to ensure complete lubrication. The oil passage within one rocker arm cylinder set is shown. See Figure 1-53and see Figure 1-54.

(Rev. 2004) *All information subject to change without notice.*
6SE483 0401 Copyright © 2004 DETROIT DIESEL CORPORATION

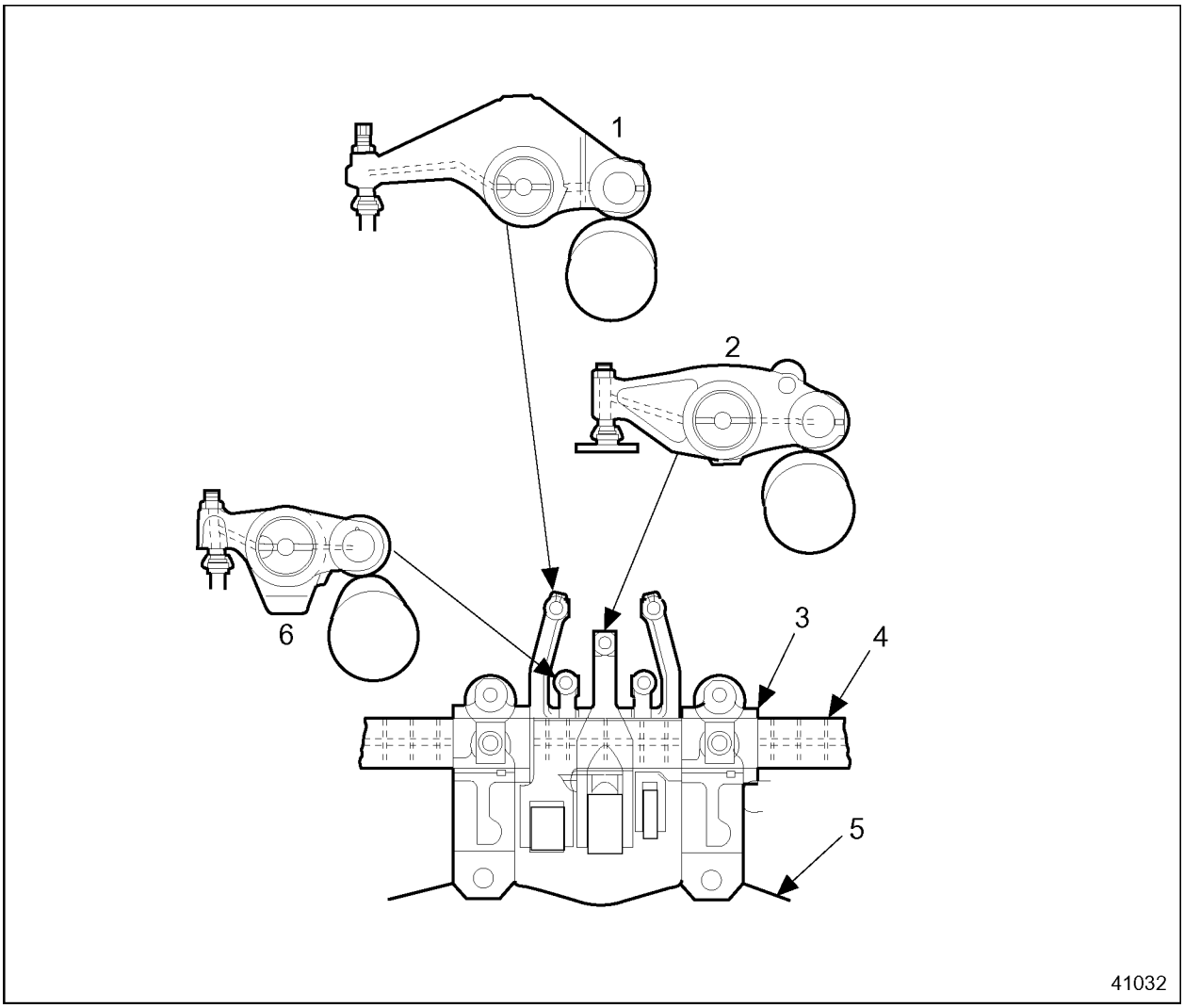

1. Exhaust Rocker Arm Assembly
2. Fuel Injector Rocker Arm Assembly
3. Camshaft Cap
4. Rocker Arm Shaft
5. Cylinder Head
6. Intake Rocker Arm Assembly

Figure 1-53 Rocker Arm Assembly Lubrication Schematic with Former Valve Adjusting Screw Assembly

 Copyright © 2004 DETROIT DIESEL CORPORATION

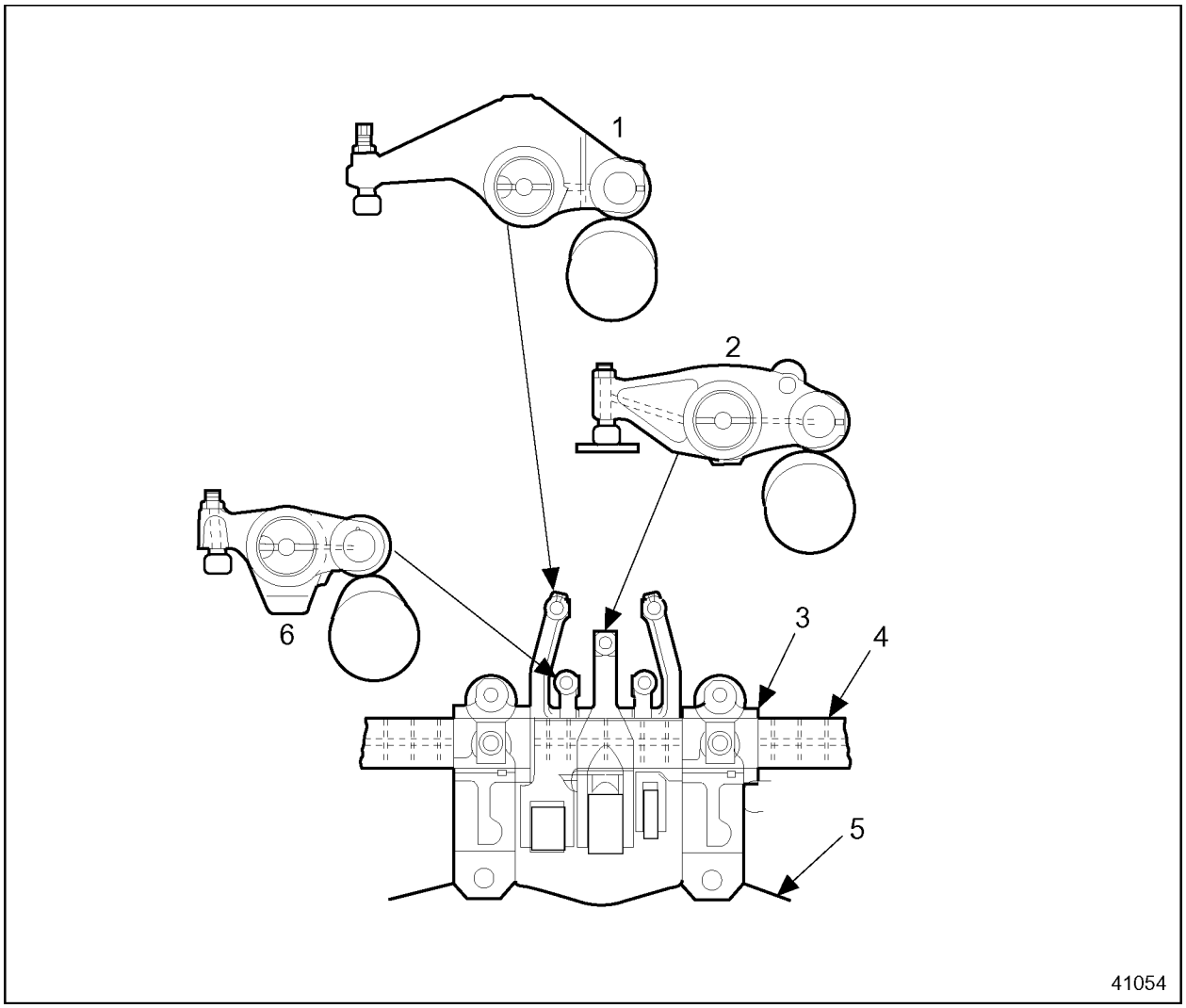

1. Exhaust Rocker Arm Assembly
2. Fuel Injector Rocker Arm Assembly
3. Camshaft Cap
4. Rocker Arm Shaft
5. Cylinder Head
6. Intake Rocker Arm Assembly

Figure 1-54 Rocker Arm Assembly Lubrication Schematic with Unitized Valve Adjusting Screw Assemblies

(Rev. 2004) *All information subject to change without notice.*
6SE483 0401 Copyright © 2004 DETROIT DIESEL CORPORATION

1.3.1 Repair or Replacement of Valve and Injector Operating Mechanism

To determine if repair is possible or replacement is necessary, perform the following procedure. See Figure 1-55.

 Copyright © 2004 DETROIT DIESEL CORPORATION

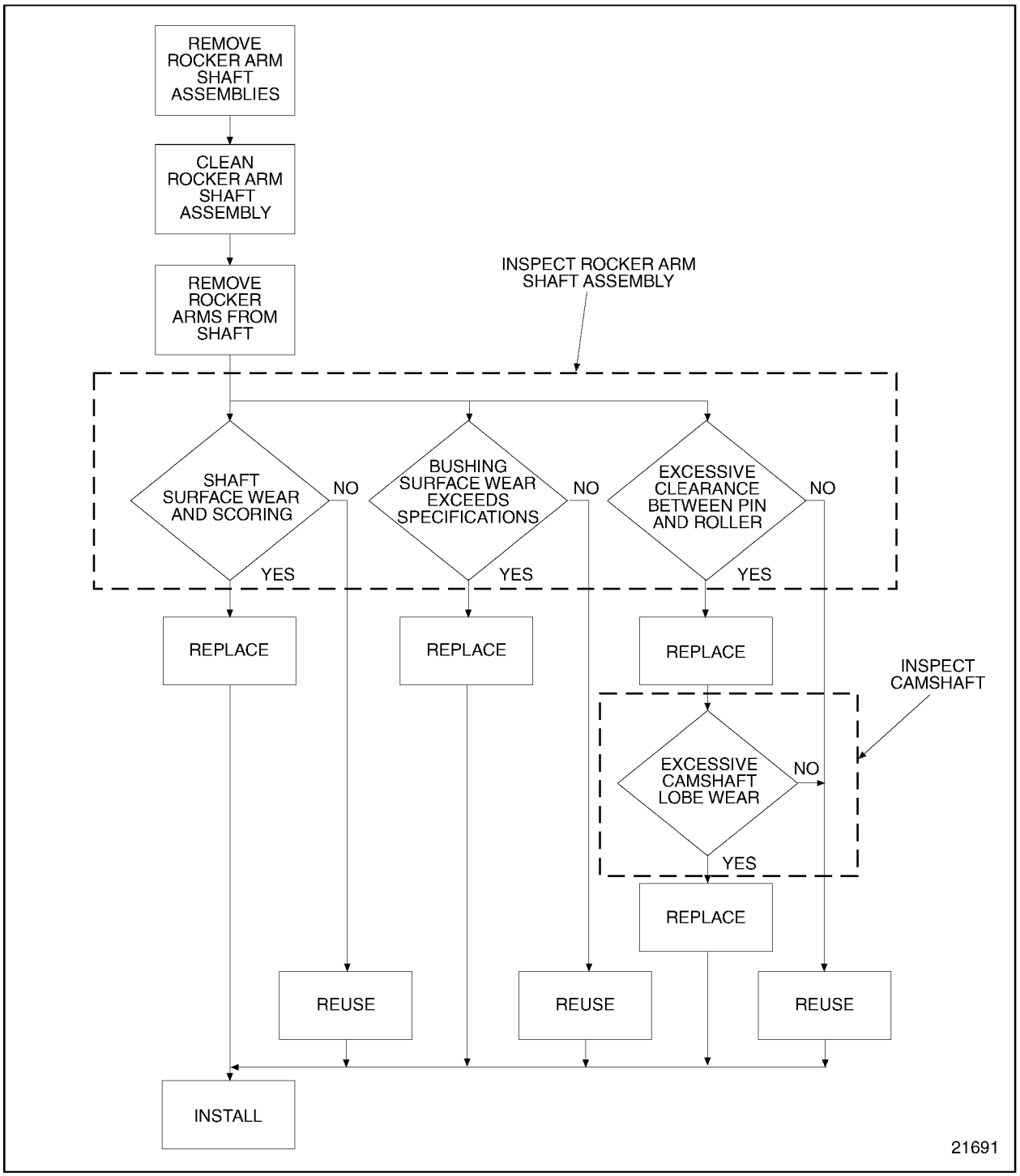

Figure 1-55 Flowchart for Repair or Replacement of Valve and Injector Operating Mechanism and Camshaft

(Rev. 2004) *All information subject to change without notice.*
6SE483 0401 Copyright © 2004 DETROIT DIESEL CORPORATION

1.3.2 Removal of Rocker Arm Assembly

Perform the following steps for rocker arm assembly removal:

NOTE:
If unit is equipped with Jake Brake®, remove brake. Refer to section 1.30.2.

NOTE:
Jake Brakes are not used on the Series 60G engine.

1. If necessary, steam clean the engine around the valve rocker cover and cylinder head mating area.

NOTE:
High pressure water or steam cleaning should be avoided in the valve rocker cover/cylinder head area of the Series 60 gas. The ignition system can be affected.

2. Remove the valve rocker cover. Refer to section 1.6.2(one-piece), refer to section 1.6.3(two piece), and refer to section 1.6.5(three-piece).
3. Remove the rocker arm shaft bolts (No. 2, 3, 4 or 5, 6, 7) and nuts (No. 1 or 8) that retain the rocker arm shaft assembly to the cylinder head. See Figure 1-56 for Series 60 diesel engine and see Figure 1-57for Series 60 gas engine. For camshaft or cylinder head removal, both rocker arm shaft assemblies must be removed.

NOTE:
Whenever nuts No. 1 or 8 are loosened or removed, the torque on the corresponding rocker shaft stud must be checked. Torque to 126–146 N·m (93–108 lb·ft).

 Copyright © 2004 DETROIT DIESEL CORPORATION

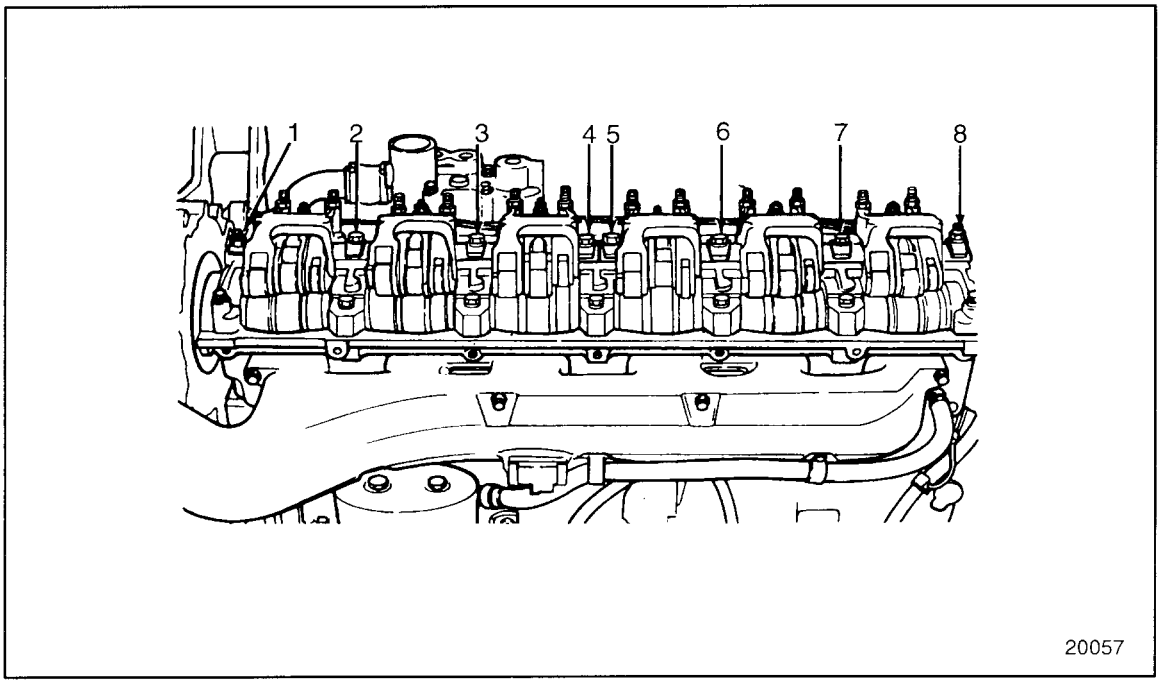

Figure 1-56 Rocker Arm Shaft Bolts and Nut Identification Numbers

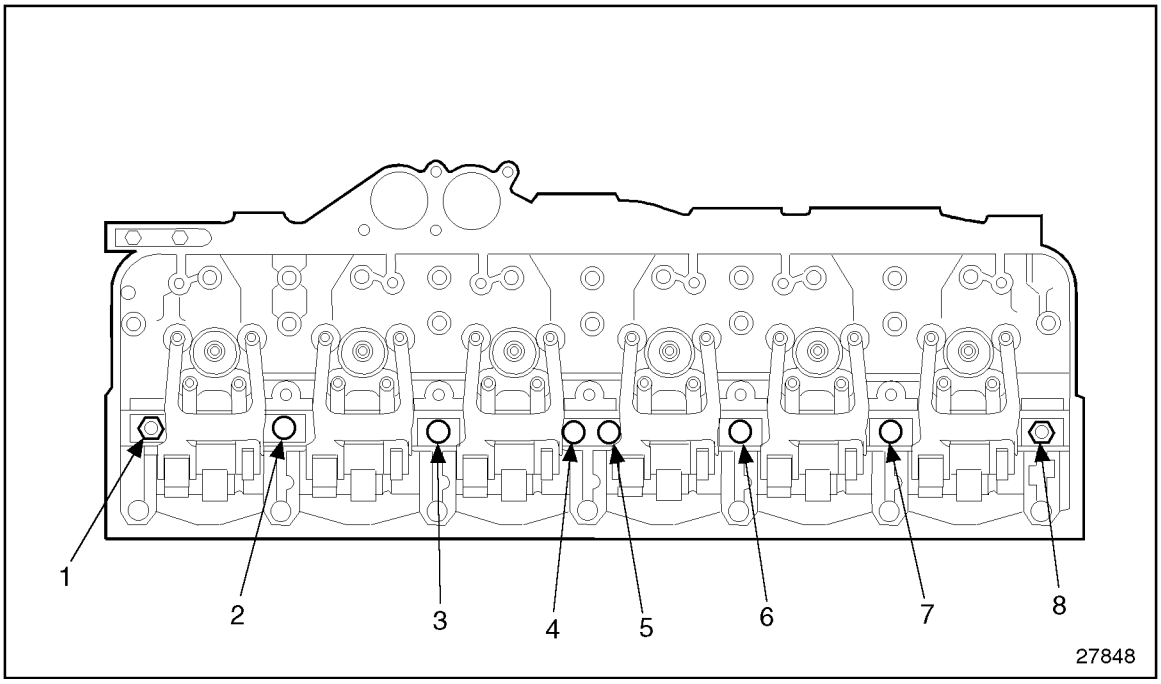

Figure 1-57 Rocker Arm Shaft Bolts and Nut Identification Numbers (Series 60G Engine)

(Rev. 2004) *All information subject to change without notice.*
6SE483 0401 Copyright © 2004 DETROIT DIESEL CORPORATION

4. Use rocker arm and shaft assembly removal tool, J 35996-A, to remove the rocker arm shafts, with rocker arm assemblies in place. See Figure 1-58.

NOTE:
Some engines may be equipped with ceramic injector rollers. Use extra caution while removing and handling.

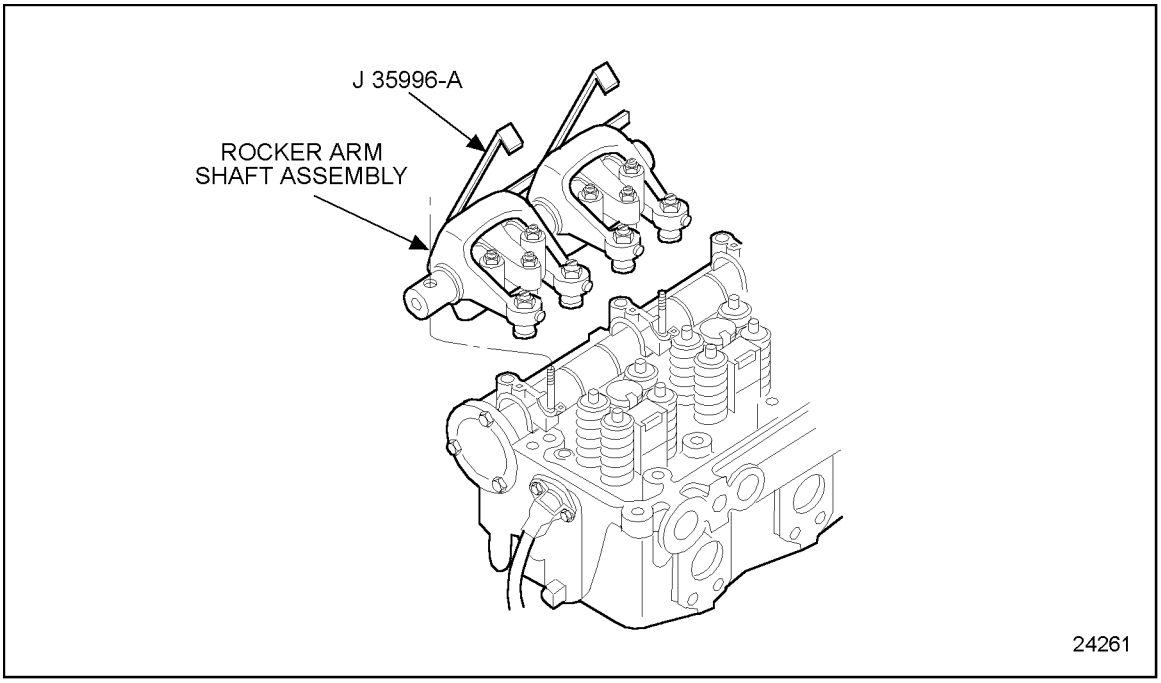

Figure 1-58 Rocker Arm Shaft Assembly Removal

5. Remove unitized valve adjusting screw assemblies. Then proceed to step 7.

NOTE:
If the unitized valve button separates from the screw, the button and screw must be replaced with a new Unitized Valve Adjusting Screw assembly. Do not attempt to reassemble them for reuse in engine. Unitized Valve Adjusting Screws will not be serviced separately.

NOTE:
If removing a former valve adjusting screw with valve button and retainer clip, proceed to step 6.

 Copyright © 2004 DETROIT DIESEL CORPORATION

6. To remove the valve button or valve button retaining clip, the valve adjusting screw must be removed from the rocker arm as follows:

NOTICE:
To avoid possible component damage, the valve button retainer MUST NOT be expanded more than 15.5 mm (0.610 in.). An adjusting screw is provided on the expander tool to limit the amount of travel.

[a] Spread the retaining clip with expander and remove the button. See Figure 1-59.

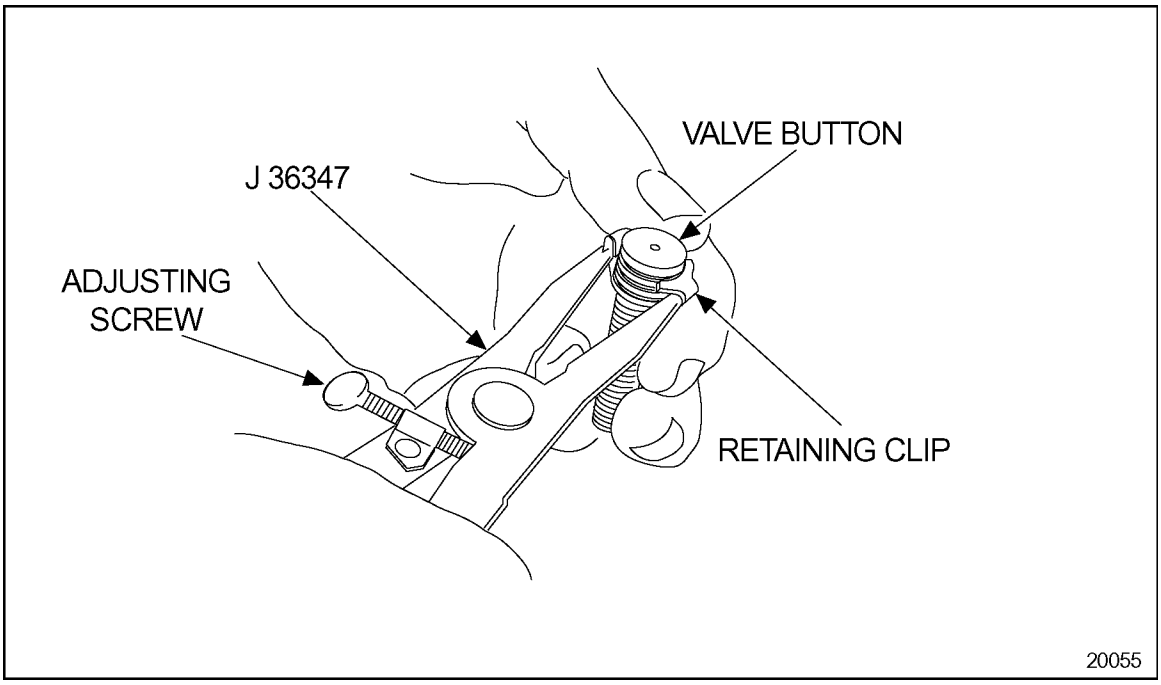

Figure 1-59 Valve Button Retainer Clip Removal

[b] Slide the retaining clip, open end first, down the adjusting screw. It is necessary to spread the clip slightly so that the open end can pass over the ball head of the adjusting screw.

[c] Insert the tips of the expander, J 36347, between the legs of the retaining clip and expand the clip.

[d] Insert the groove on the valve button into the legs of the retaining clip.

[e] Remove the expander and hold the legs of the retainer with the thumb and index finger.

[f] Press the valve button towards the screw to seat both legs of the retainer completely in the groove.

(Rev. 2004) *All information subject to change without notice.*
6SE483 0401 Copyright © 2004 DETROIT DIESEL CORPORATION

7. If further disassembly is necessary, slide the rockers off the shafts, marking or segregating the parts so that they may be reinstalled in the same position from which they were removed.

NOTE:
Front and rear rocker arm shaft sections look identical, but must not be reversed, and must be installed as removed, due to bolt hole center line distances. The DDC logo is stamped on the outboard end of each rocker shaft to ensure correct assembly and installation. See Figure 1-60.

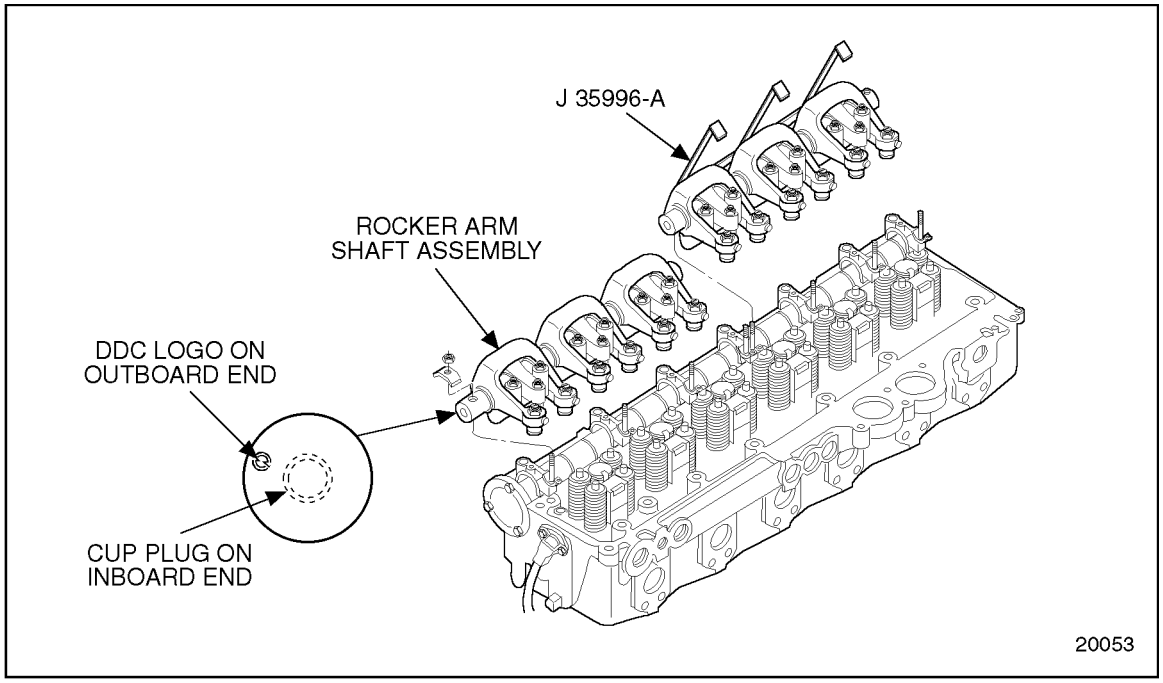

Figure 1-60 Rocker Arm Shaft Identification Mark

 Copyright © 2004 DETROIT DIESEL CORPORATION

1.3.2.1 Cleaning of Rocker Arm Assemblies

Clean the rocker arm assemblies as follows:

1. Remove the cup plug at one end of the rocker arm shafts to facilitate the removal of any foreign material lodged behind the plug.

NOTICE:
Do not soak the rocker arms in solvent because this will remove the lubricant from the cam follower roller bushings.

2. Clean the exterior of the rocker arms only.

CAUTION:
To avoid injury from flying debris when using compressed air, wear adequate eye protection (face shield or safety goggles) and do not exceed 40 psi (276 kPa) air pressure.

3. Blow dry with compressed air.
4. Soak the rocker shaft in clean fuel oil.
5. Run a wire brush through the oil passage to remove any foreign material or sludge.
6. Clean the exterior of the shaft and blow out the passages and oil holes; and dry with compressed air.

(Rev. 2004) *All information subject to change without notice.*
6SE483 0401 Copyright © 2004 DETROIT DIESEL CORPORATION

1.3.2.2 Inspection of Rocker Arm Assemblies and Camshaft Lobes

Prior to inspection:

1. Install new cup plugs with tool, J 36326, until they are 1.0-1.3 mm (0.040-0.050 in.) below the surface of the shaft. See Figure 1-61.

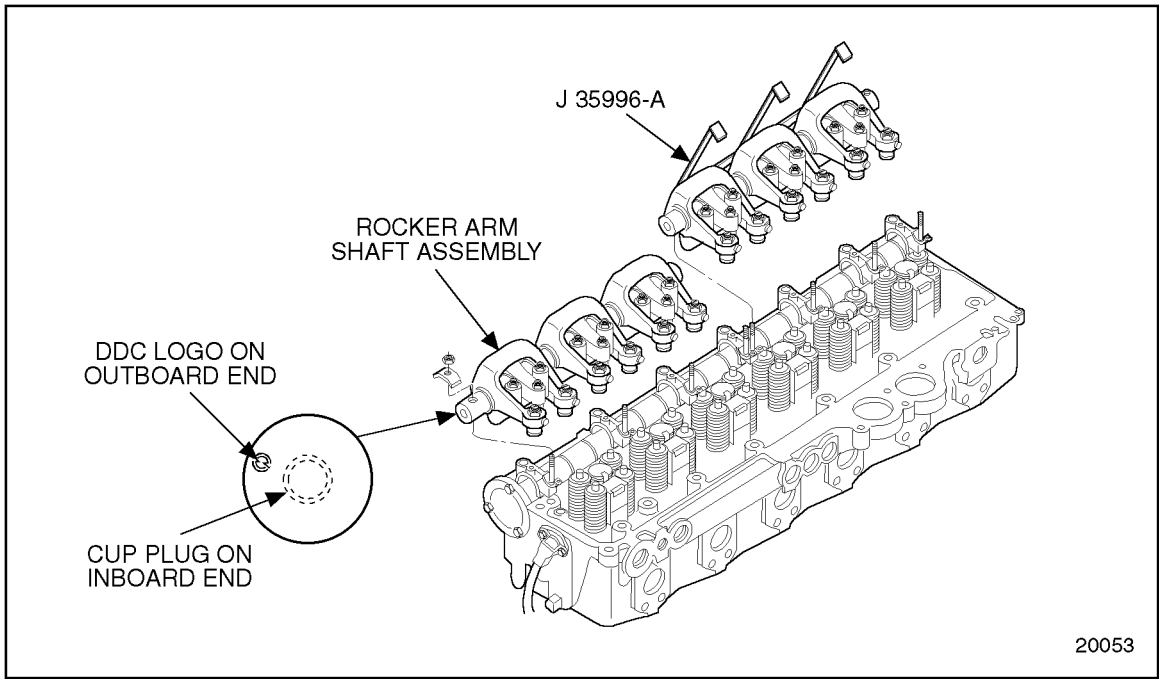

Figure 1-61 Rocker Arm Shaft Identification Mark

2. Remove all of the old gasket sealer from the joint face of the No. 1 and 7 camshaft bearing caps and the cylinder head. Refer to"Gasket Eliminator Removal" in the "General Information" section.

 Copyright © 2004 DETROIT DIESEL CORPORATION

Inspect the rocker arm assemblies and camshaft lobes as follows:

1. Inspect the rocker arm shaft bushing surfaces and rocker arm bushing bores.
   [a] Check the rocker arm shaft bushing surfaces and rocker arm bushing bores for wear or scoring. If damage was found, replace component.
   [b] If no damage was found, reuse component.
2. Inspect the cam follower rollers.
   [a] Check the cam follower rollers for scoring, pitting, or flat spots. If damage was found, replace the component.
   [b] If no damage was found, reuse component.
3. Check the cam follower rollers to ensure they turn freely on the roller pins.
   [a] Clearance between the rollers and pins should not be more than 0.08 mm (0.003 in.).
   [b] Replace as necessary.
4. Inspect the camshaft lobes and journals.
   [a] Check the camshaft lobes and journals for scoring, pitting, or flat spots. If damage was found, replace the component.
   [b] If there is doubt as to the acceptability of the camshaft for further service, determine the extent of camshaft lobe wear. Refer to section 1.24.3.1.
5. Inspect the valve adjusting screw assemblies.
   [a] If former style valve adjusting screw assembly is damaged; replace with new unitized valve adjusting screw assembly.

NOTE:
Replace with unitized valve adjusting screw assembly of the correct position.

   [b] If any damage is found on the unitized valve adjusting screw assembly; replace with new unitized screw assembly.
   [c] If no damage is found on the former style valve adjusting screw or on the new unitized valve adjusting screw assembly; reuse the components.

NOTE:
Former style valve adjusting screw assemblies and the unitized valve adjusting screw assemblies are interchangeable and can be mixed in the same engine.

(Rev. 2004) *All information subject to change without notice.*
6SE483 0401 Copyright © 2004 DETROIT DIESEL CORPORATION

1.3.3 Installation of Rocker Arm Shaft Assembly

Perform the following for rocker arm shaft assembly installation:

1. Ensure the cup plugs are properly installed to each end of the rocker arm shafts before the shafts are installed to the engine. See Figure 1-62. Refer to section 1.3.2.2, step 1.

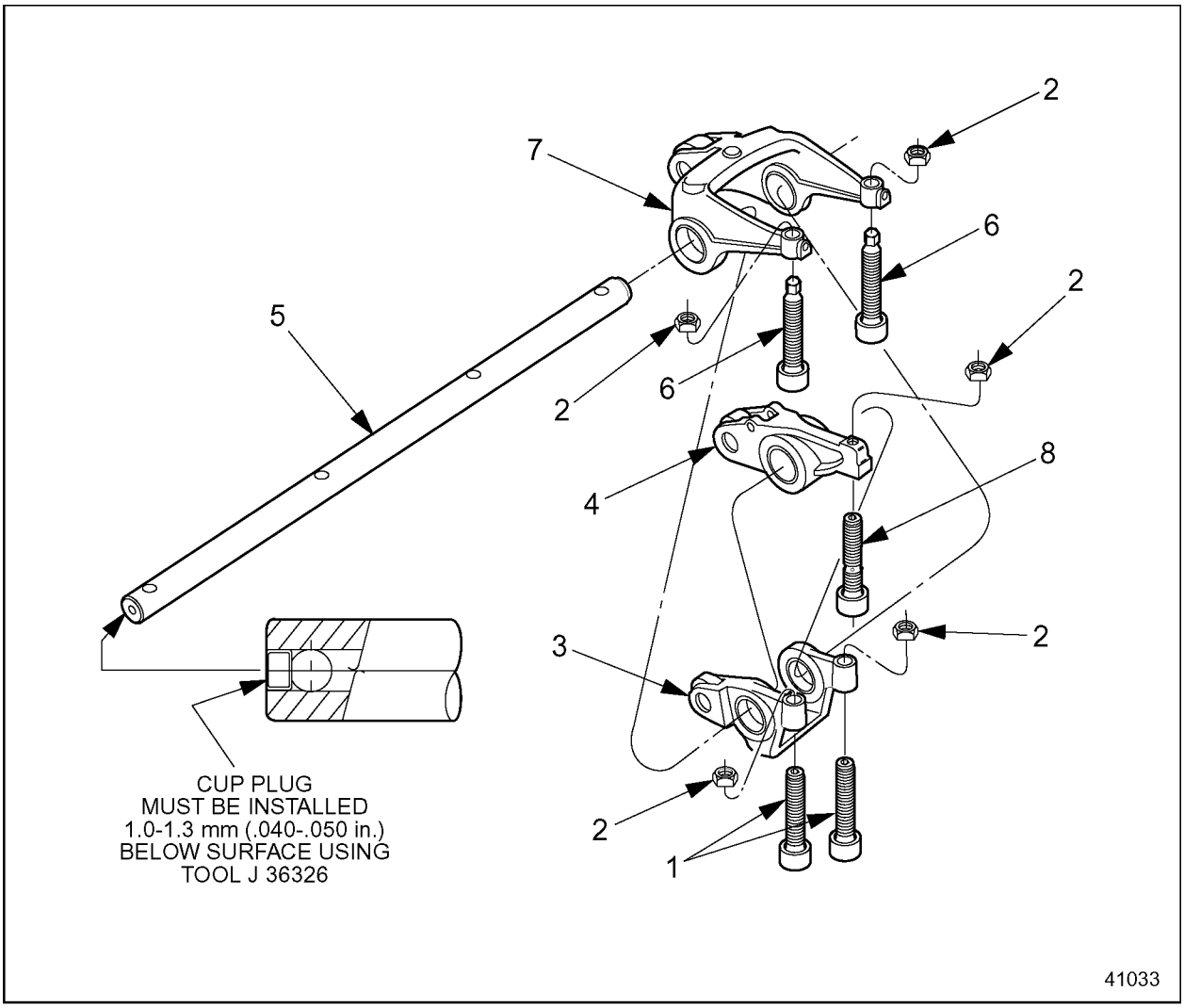

1. Unitized Valve Adjusting Screw Assembly; Intake position
2. Locknut
3. Intake Rocker Arm Assembly
4. Fuel Injector Rocker Arm Assembly
5. Rocker Arm Shaft
6. Unitized Valve Adjusting Screw Assembly; Exhaust position
7. Exhaust Rocker Arm Assembly
8. Unitized Valve Adjusting Screw Assembly; Injector position

Figure 1-62 Rocker Arm and Related Parts

 Copyright © 2004 DETROIT DIESEL CORPORATION

2. Check the torque on the rocker shaft studs to ensure they were not loosened when the nuts were removed. Torque the studs to 101-116 N·m (75-86 lb·ft).
3. Install the unitized valve adjusting screw assemblies to the rocker arm assemblies. See Figure 1-62.

NOTE:
There are three different unitized valve adjusting screw assemblies. Ensure the correct unitized valve adjusting screw assembly is used in the correct location. See Figure 1-63.

NOTE:
Former style valve adjusting screw assemblies can be mixed with new unitized valve adjusting screw assemblies.

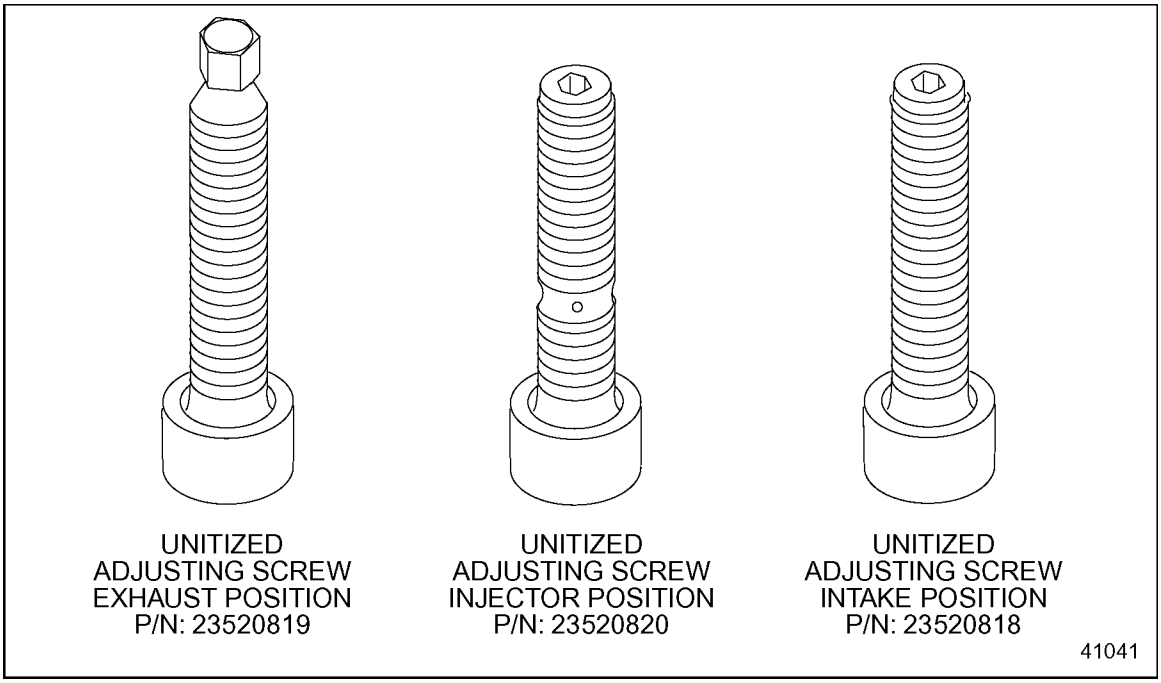

Figure 1-63 Unitized Valve Adjusting Screw Assemblies (Exhaust, Injector and Intake)

4. Install the rocker arm assemblies to the rocker arm shafts in their original positions. Use the rocker arm identification marks to ensure correct component assembly. If the rocker arm shaft does not have flats, decide on the position of the worn surfaces and rotate the rocker shaft accordingly.

(Rev. 2004) *All information subject to change without notice.*
6SE483 0401 Copyright © 2004 DETROIT DIESEL CORPORATION

5. Using care to locate the valve button of the unitized valve adjusting screw assemblies to their respective valve stems and injector followers, install the rocker arm shaft assemblies to the cylinder head. See Figure 1-64.

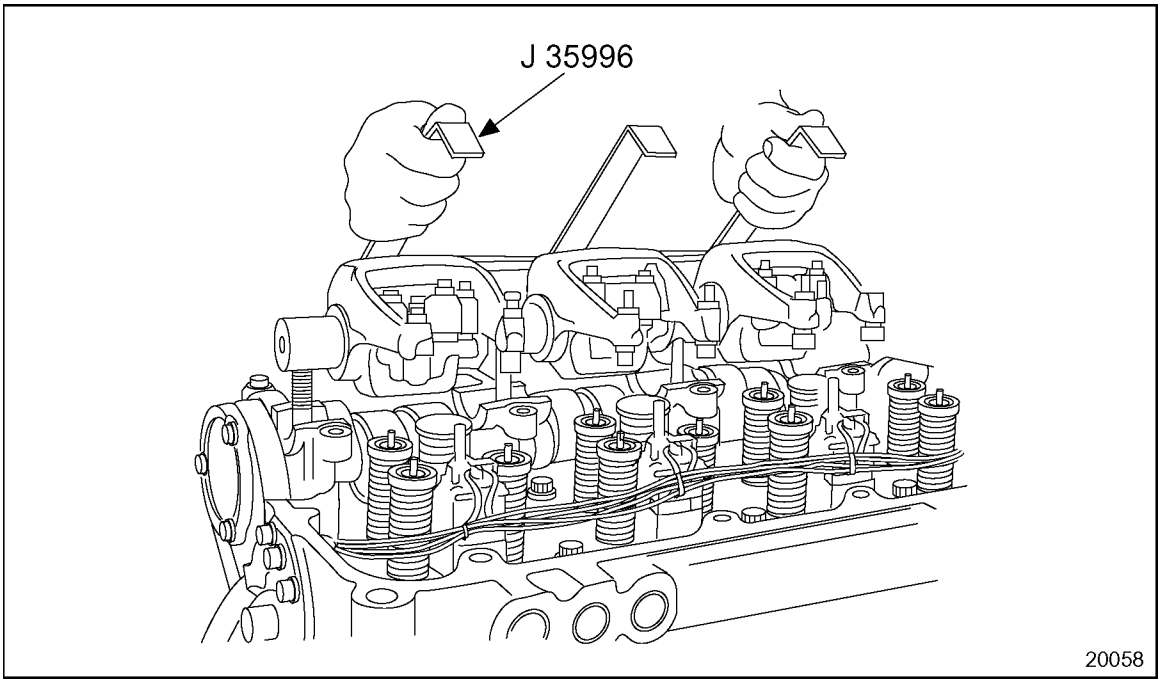

Figure 1-64 Rocker Arm Shaft Assembly Installation

6. If the rocker arm shafts do not have flats in the bolt hole locations, rocker shaft spacers are required.
   [a] If the rocker shafts do not have flats in the bolt hole locations, install the rocker shaft spacers on the cap bolts and studs.
   [b] If the rocker shafts do have flats in the bolt hole locations, rocker shaft spacers are not required.
7. Install the inboard camshaft cap bolts for each rocker arm assembly, through the rocker arm shaft and camshaft cap and into the cylinder head.
8. Install the nuts to the No. 7 and 8 cap studs.

NOTE:
If new rocker arm components are installed, engine oil should be poured over the rocker arms, rocker shaft, and camshaft as a pre-lubricant.

 Copyright © 2004 DETROIT DIESEL CORPORATION

9. Torque the rocker arm shaft nuts to 101-116 N·m (75-86 lb·ft) using the sequence. See Figure 1-65.

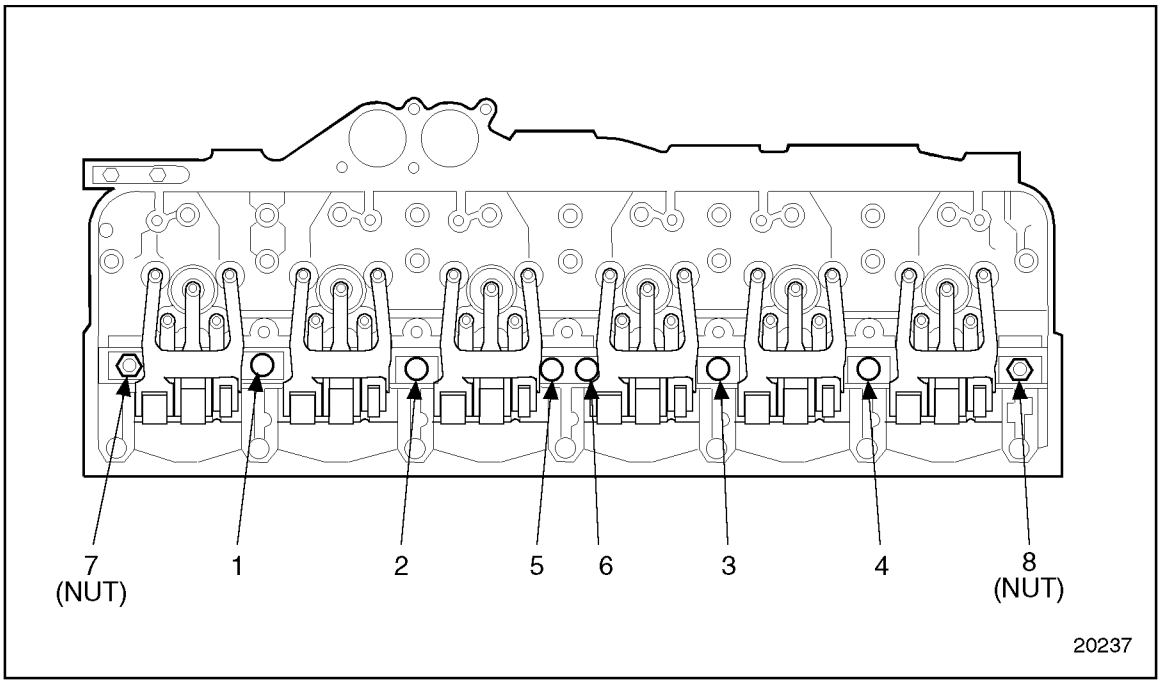

Figure 1-65 Rocker Arm Shaft Retaining Bolt and Nut Tightening Sequence

10. Adjust the intake and exhaust valve clearances and set the injector heights. Refer to section 12.2.
11. Install the valve rocker cover. Refer to section 1.6.8(one-piece), refer to section 1.6.9(two-piece) and (three-piece).
12. Install any other components that were removed for this procedure.

(Rev. 2004) *All information subject to change without notice.*
6SE483 0401 Copyright © 2004 DETROIT DIESEL CORPORATION

CAUTION:

Diesel engine exhaust and some of its constituents are known to the State of California to cause cancer, birth defects, and other reproductive harm.

- ☐ **Always start and operate an engine in a well ventilated area.**
- ☐ **If operating an engine in an enclosed area, vent the exhaust to the outside.**
- ☐ **Do not modify or tamper with the exhaust system or emission control system.**

13. Start the engine and check for leaks.
14. Shut down the engine when completed.

 Copyright © 2004 DETROIT DIESEL CORPORATION

1.4 VALVES, SPRINGS, GUIDES, INSERTS, SEALS AND ROTATORS

Four valves per cylinder, two each intake and exhaust, give the Series 60 engine excellent breathing and cooling characteristics. See Figure 1-66.

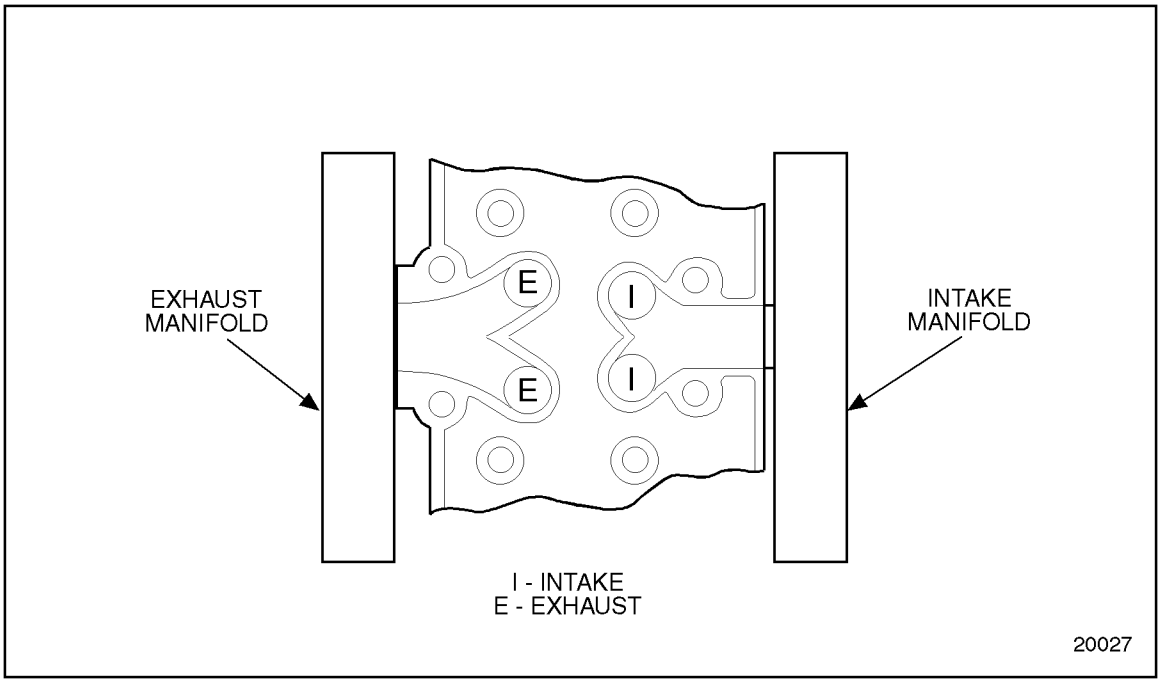

Figure 1-66 Intake and Exhaust Valve Arrangements

Valves are made of heat-treated alloys, with heads and stems precision ground. Stem ends are hardened to minimize wear in contact with the valve rocker buttons.

Hard-alloy valve seat inserts, pressed into both intake and exhaust ports, can be replaced when worn to restore new engine performance.

(Rev. 2004) *All information subject to change without notice.*
6SE483 0401 Copyright © 2004 DETROIT DIESEL CORPORATION

Valves are positioned and aligned by replaceable valve guides pressed into the cylinder head. See Figure 1-67.

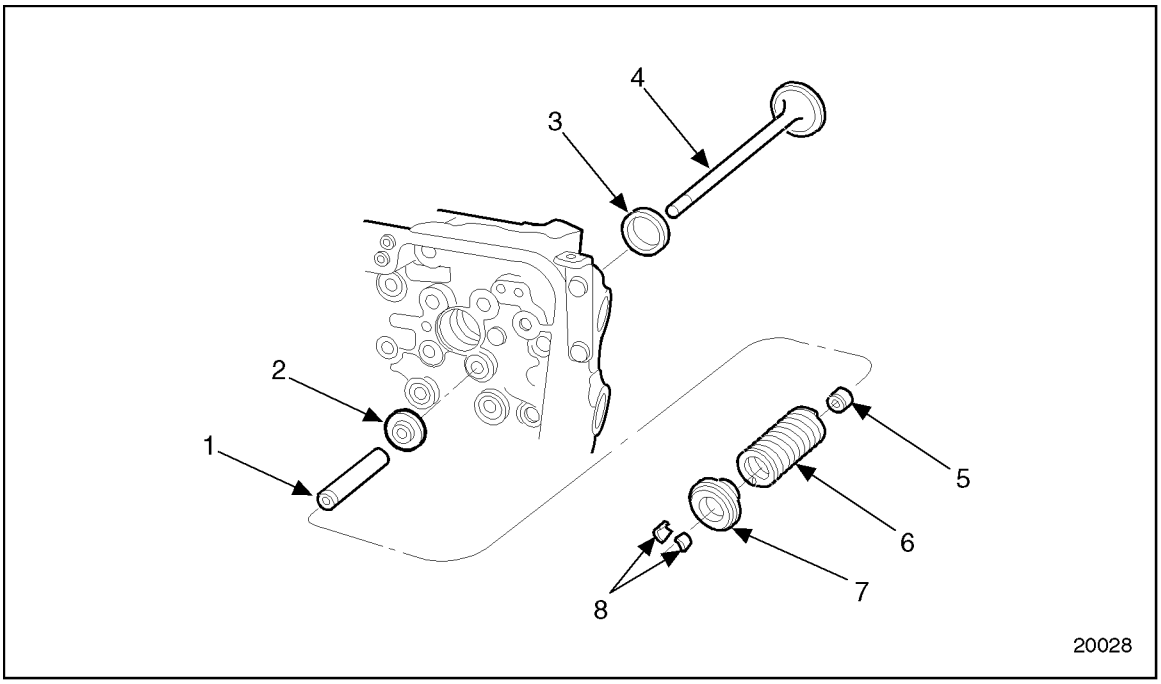

1. Valve Guide
2. Valve Spring Seat
3. Valve Insert
4. Valve
5. Valve Stem Oil Seal
6. Valve Spring
7. Valve Rotator
8. Valve Keepers

Figure 1-67 Valve Guide and Related Parts

Replacement guides are reamed to close tolerances, and do not require reaming after installation.

All valves are retained by valve rotator spring caps and two-piece tapered valve locks.

 Copyright © 2004 DETROIT DIESEL CORPORATION

Valve stem oil seals, installed on both intake and exhaust valves, provide controlled valve stem lubrication while limiting oil consumption.

NOTE:
New valve seat inserts are pre-ground and only need to be checked for concentricity after installation. Do not grind a new seat insert unless concentricity exceeds 0.05 mm (0.002 in.). Before grinding, be sure the valve guide is not excessively worn or bent, which could cause an erroneous concentricity reading. If the firedeck has been resurfaced, the valves will have to be seated deeper to restore the valve head recess depth to specification limits. Do not grind seat inserts for this purpose. Reduced thickness inserts are available that are 0.2540, 0.5080 and 0.7620 mm (0.010, 0.020 and 0.030 in.) shallower than standard. When a reduced thickness valve seat insert is used, a correspondingly thicker valve spring seat must be used. See Figure 1-68, and see Figure 1-69.

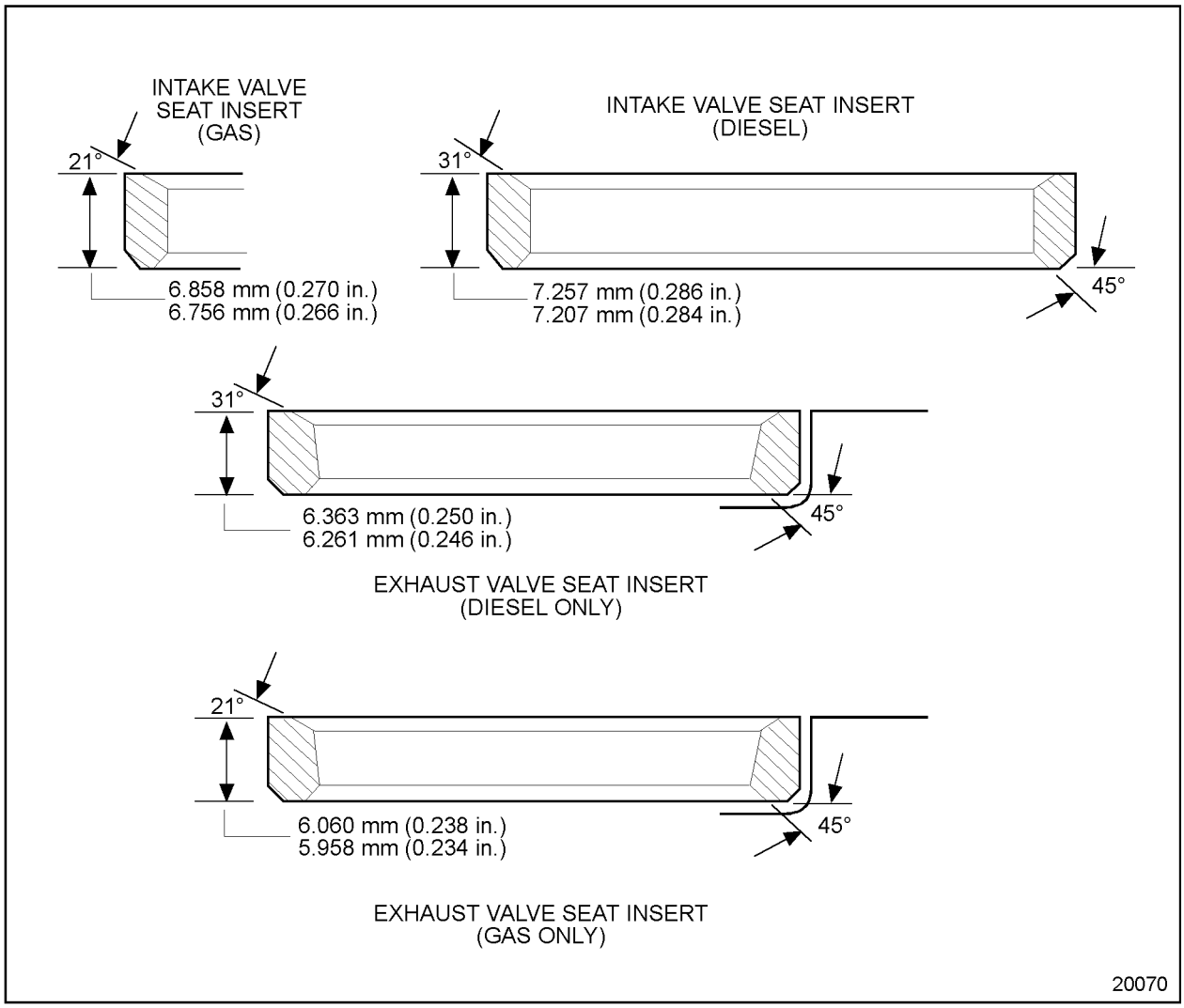

Figure 1-68 Standard Valve Seat Insert Thickness

(Rev. 2004) *All information subject to change without notice.*
6SE483 0401 Copyright © 2004 DETROIT DIESEL CORPORATION

When servicing exhaust valves, determine which type of exhaust valve is contained in the engine. If an exhaust valve must be replaced, use the same type that was removed. Do not mix exhaust valve types within an engine. Both exhaust valves are available from service stock for this purpose. Exhaust valve lash settings are affected by the type of exhaust valve that is contained in the engine. The valve lash settings and injector timing height are listed on the valve rocker cover. Refer to section 12.2.

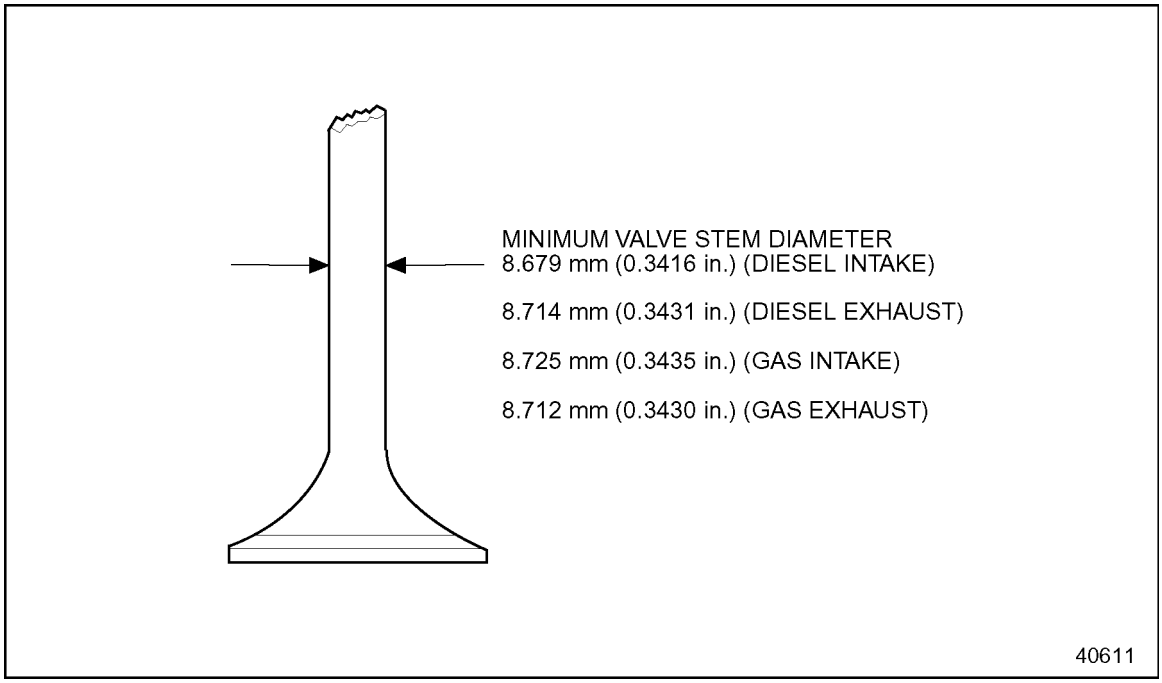

Figure 1-69 Minimum Valve Stem Diameter

Two types of exhaust valves are used on Series 60 engines. Pre-1991 model engines use a nickel-based alloy which can be identified by a forged "U" on the combustion face. 1991 model and beyond engines use an austenitic based alloy which can be identified by a forged "H" on the combustion face, and by a machined identification ring above the valve lock groove. See Figure 1-70. The identification ring can be seen from the right side of the engine with rocker cover removed.

 Copyright © 2004 DETROIT DIESEL CORPORATION

Series 60G exhaust valves for automotive engines are an inconnel based material. They are marked with a "J" on the face of the valve and a "J6-E-5" and a green dot on the top of the stem of the valve.

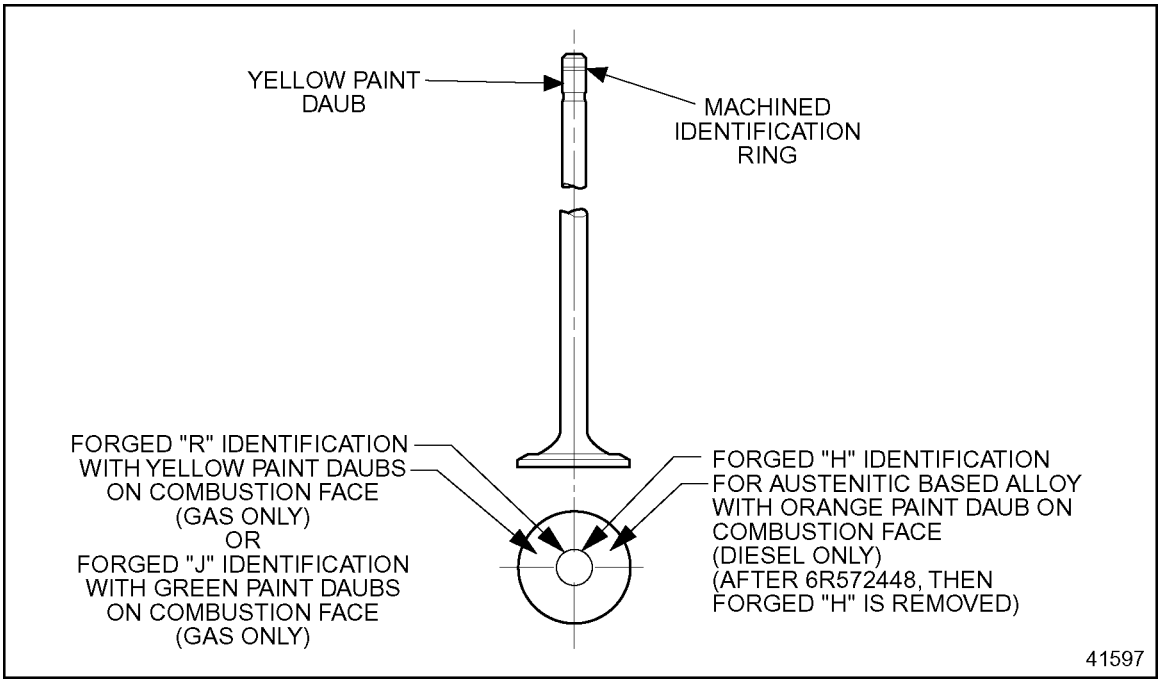

Figure 1-70 Exhaust Valve Identification

(Rev. 2004) *All information subject to change without notice.*
6SE483 0401 Copyright © 2004 DETROIT DIESEL CORPORATION

Beginning with engine model number 6R572448, distinguishing an intake valve from an exhaust valve can be identified by the different size dimples located under the head of the valve, rather then forged lettering. See Figure 1-70and see Figure 1-71. This applies to all *Series 60* diesel applications with the exception of the marine engine.

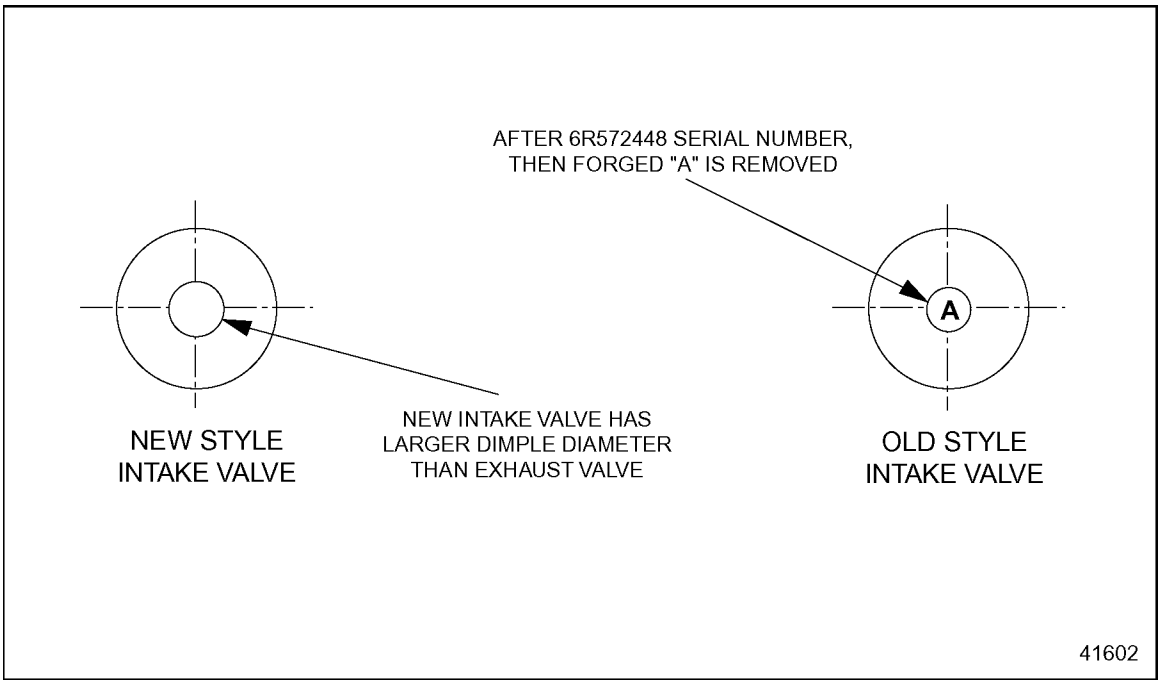

Figure 1-71 Location of Dimples on Intake Valves

1.4.1 Repair or Replacement of Valves

To determine if repair is possible or replacement is necessary, perform the following procedure. See Figure 1-72.

 Copyright © 2004 DETROIT DIESEL CORPORATION

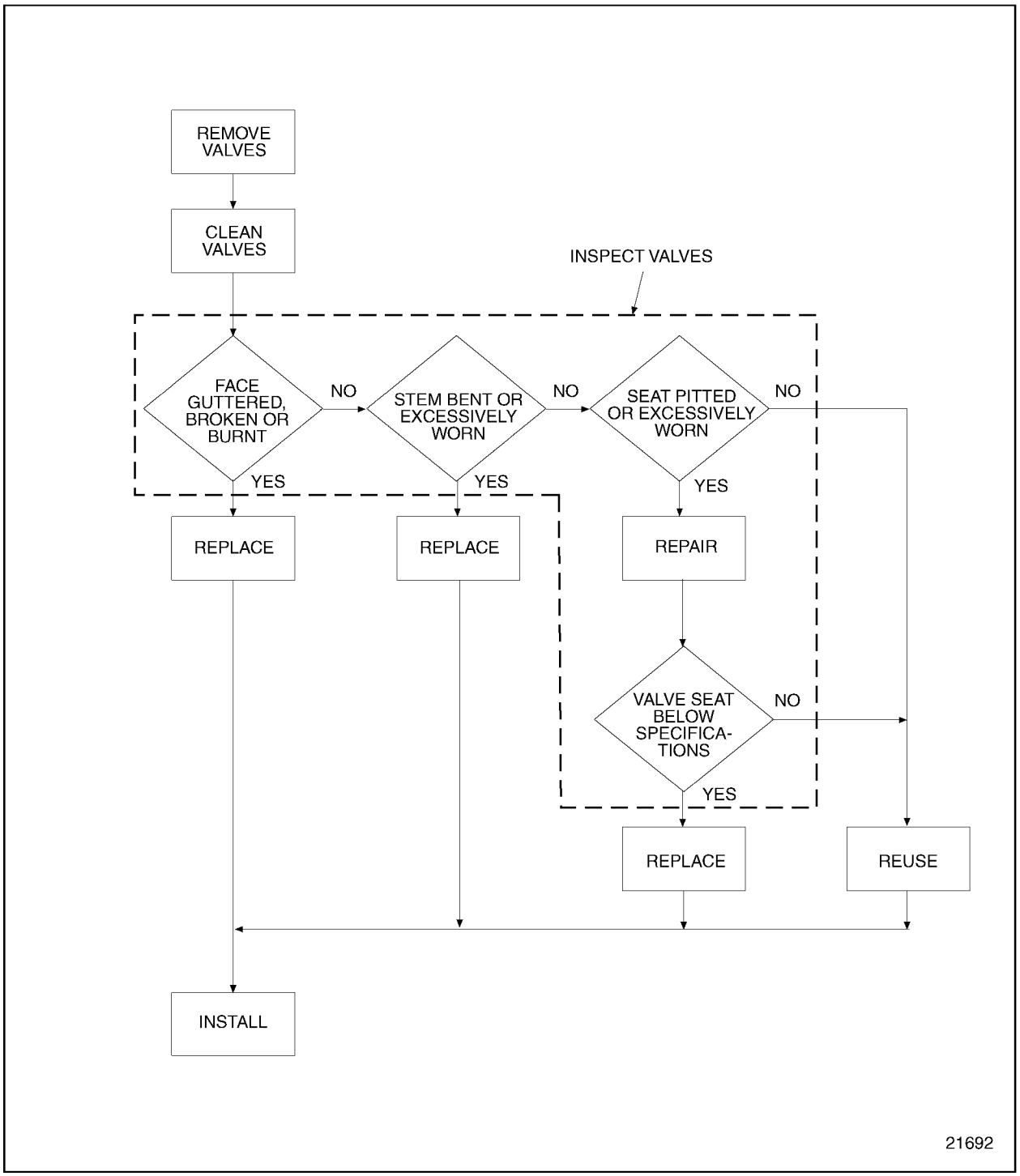

Figure 1-72 Flowchart for Repair or Replacement of Valves

1.4.2 Removal and Cleaning of Valve Spring (Cylinder Head Installed)

Perform the following steps for valve spring removal:

(Rev. 2004) *All information subject to change without notice.*
6SE483 0401 Copyright © 2004 DETROIT DIESEL CORPORATION

1. Clean any dirt and debris from the valve rocker cover joint area around the top of the cylinder head. Remove the valve rocker cover. Refer to section 1.6.2(one-piece), refer to section 1.6.3(two-piece), refer to section 1.6.5(three-piece).
2. If the engine has a Jake Brake®, remove the Jake Brake® housings that cover the rocker arm and shaft assembly for the valve to be serviced refer to section 1.30.2.
3. Remove the rocker arm shaft assembly, refer to section 1.3.2.
4. Remove the injector from the appropriate cylinder. Refer to section 2.3.2.

NOTE:
Fuel must be removed from the cylinder head fuel galleries prior to removing the injectors. Refer to section 2.3.2.

5. Bar the engine over until the cylinder is at top-dead-center (TDC).
6. Insert the threaded portion of the valve spring compressor, J 35580into the threaded inboard camshaft cap hole adjacent to the valve being worked on. See Figure 1-73.

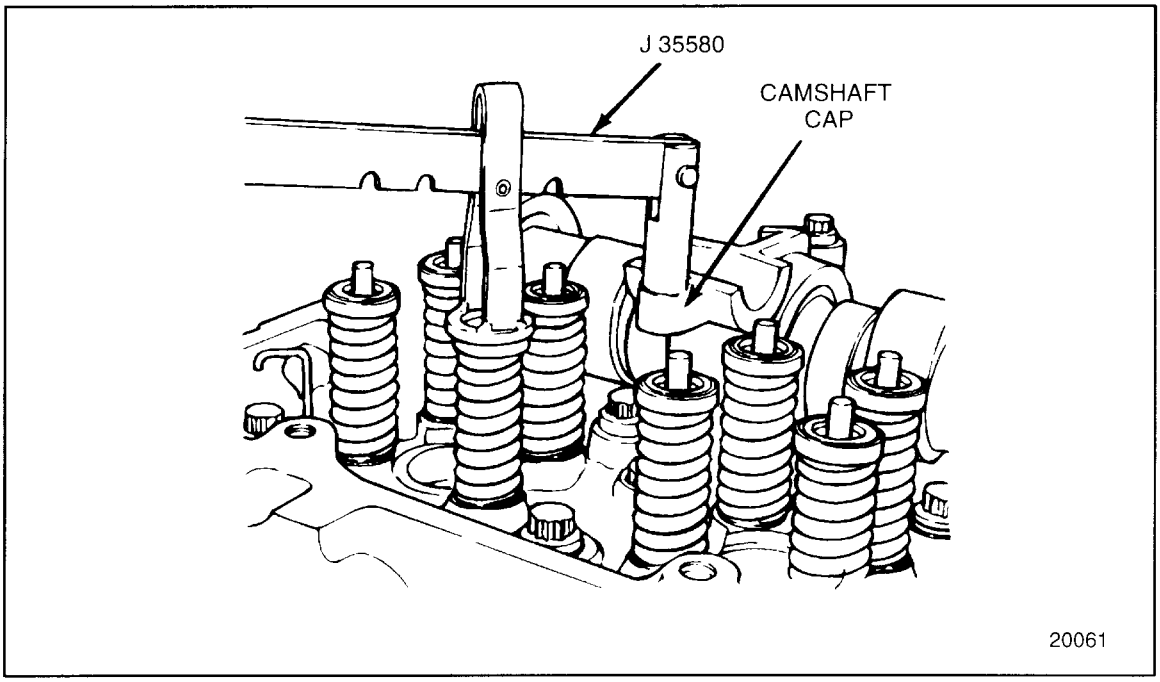

Figure 1-73 Installing Valve Spring Compressor

7. Position the spring compressor cage portion of the valve spring compressor directly over the valve spring to be compressed. Engage the dowel of the cage in the closest slot of the valve spring compressor handle.

 Copyright © 2004 DETROIT DIESEL CORPORATION

NOTICE:
Do not contact the valve with the compressor tool.

8. Compress the valve spring and remove the valve locks using a small magnet to prevent the locks from falling into the cylinder head oil return galleries.
9. Release the spring and remove the valve rotator and valve spring. If the valve stem oil seal is to be replaced, remove the seal and discard it.
10. On the other three valves it may be necessary to repeat these steps for cylinders being worked on. Refer to step 1and the following steps. Last, refer to step 9.

NOTE:
All valve spring or seal removal and replacement must be completed for each cylinder being serviced while the piston is at top-dead-center, before turning the crankshaft to work on another cylinder.

1.4.3 Removal and Cleaning of the Valve Spring (Cylinder Head Removed)

With the cylinder head assembly removed from the engine, remove the valve springs as follows:

1. Bolt the engine overhaul stand adaptor, J 35635-A, to the engine overhaul stand, J 29109, using the hardware provided with the adaptor. See Figure 1-74.

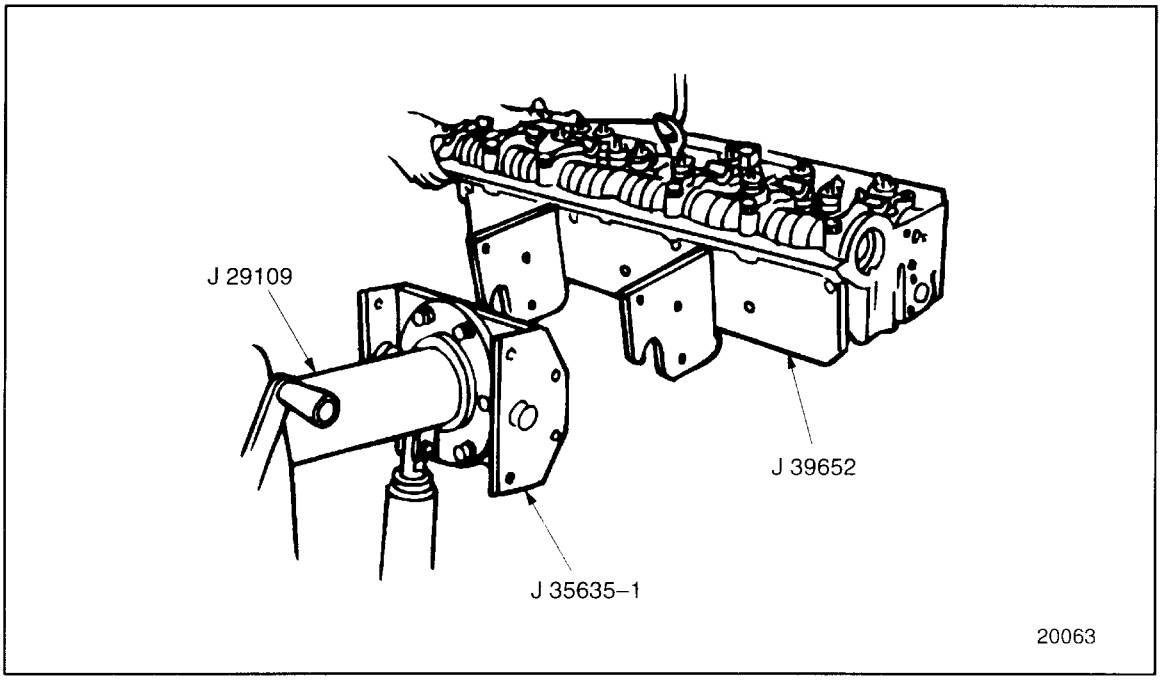

Figure 1-74 Engine Overhaul Stand

(Rev. 2004) *All information subject to change without notice.*
6SE483 0401 Copyright © 2004 DETROIT DIESEL CORPORATION

2. Bolt the cylinder head adaptor plate, J 35636-A, to the cylinder head using the bolts provided with the adaptor. See Figure 1-74.
3. Mount the cylinder head and adaptor plate to the overhaul stand adaptor by engaging the slots in the cylinder head adaptor plate to the dowels on the overhaul stand adaptor.
4. Install the six nut and bolt assemblies that secure the cylinder head adaptor plate to the overhaul stand adaptor.
5. Remove the cylinder head lifting hardware.
6. Turn the crank of the engine overhaul stand to position the cylinder head in an upright position.
7. Remove the valve locks using valve spring compressor, J 8062, with jaws, J 8062–3 installed, to compress each valve spring. See Figure 1-75.

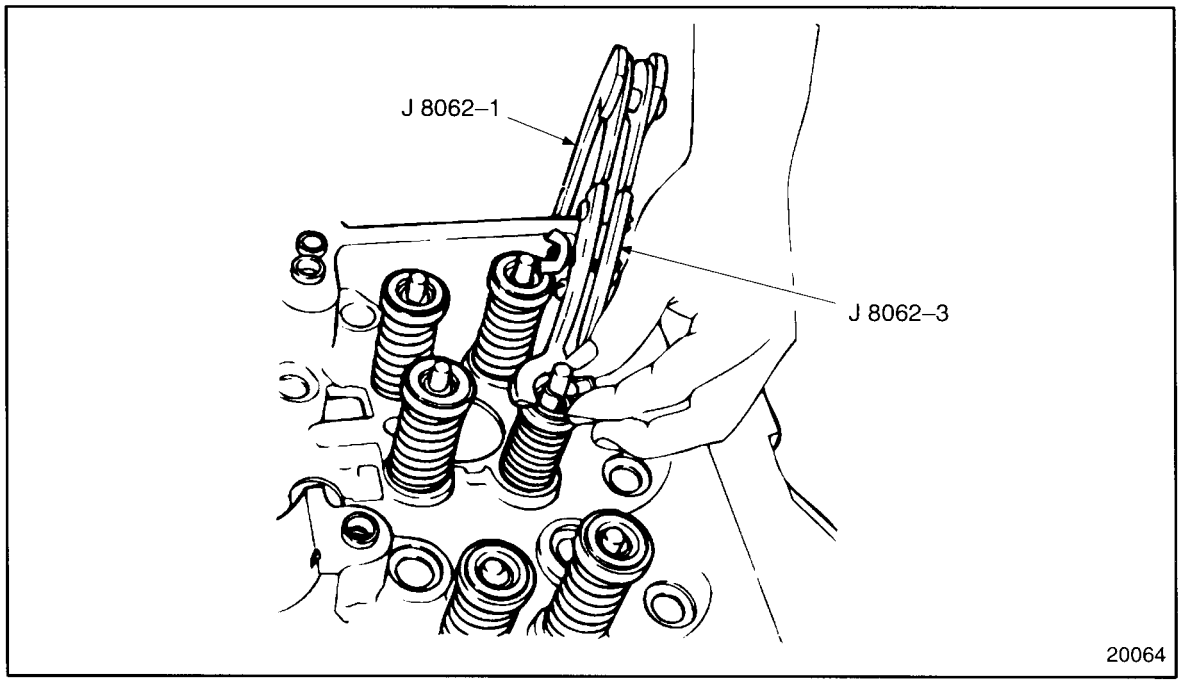

Figure 1-75 Compressing Valve Spring

8. Release the spring and remove the valve, valve rotator and valve spring.
9. Remove the valve stem oil seal and discard the seal.
10. Remove the valve spring seat.
11. As parts are removed, mark or segregate them according to their original position for possible reuse.

 Copyright © 2004 DETROIT DIESEL CORPORATION

1.4.3.1 Cleaning of Valves and Related Parts

Clean the valves and parts as follows:

CAUTION:

To avoid injury from flying debris when using compressed air, wear adequate eye protection (face shield or safety goggles) and do not exceed 40 psi (276 kPa) air pressure.

1. Using proper eye protection, clean all of the disassembled parts with fuel oil and dry with compressed air.
2. Clean the carbon from the valve stems and wash the valves with fuel oil.
3. Clean the valve guide bore to remove all gum and carbon deposits.
   [a] For diesel engines; use bore brush, J 5437 (or equivalent) for this procedure.
   [b] For natural gas engines; a cloth or soft nylon brush is recommended for this procedure.

NOTE:
Do not use bore brush (wire) on natural gas powdered metal guides.

(Rev. 2004) *All information subject to change without notice.*
6SE483 0401 Copyright © 2004 DETROIT DIESEL CORPORATION

1.4.4 Removal of Valve Guide

Perform the following steps for valve guide removal:

NOTE:
Valve guides are not replaceable on natural gas or heat exchanger-cooled pleasure craft marine engines.

1. Assemble the valve guide remover, J 34696-B, to an air chisel. See Figure 1-76.

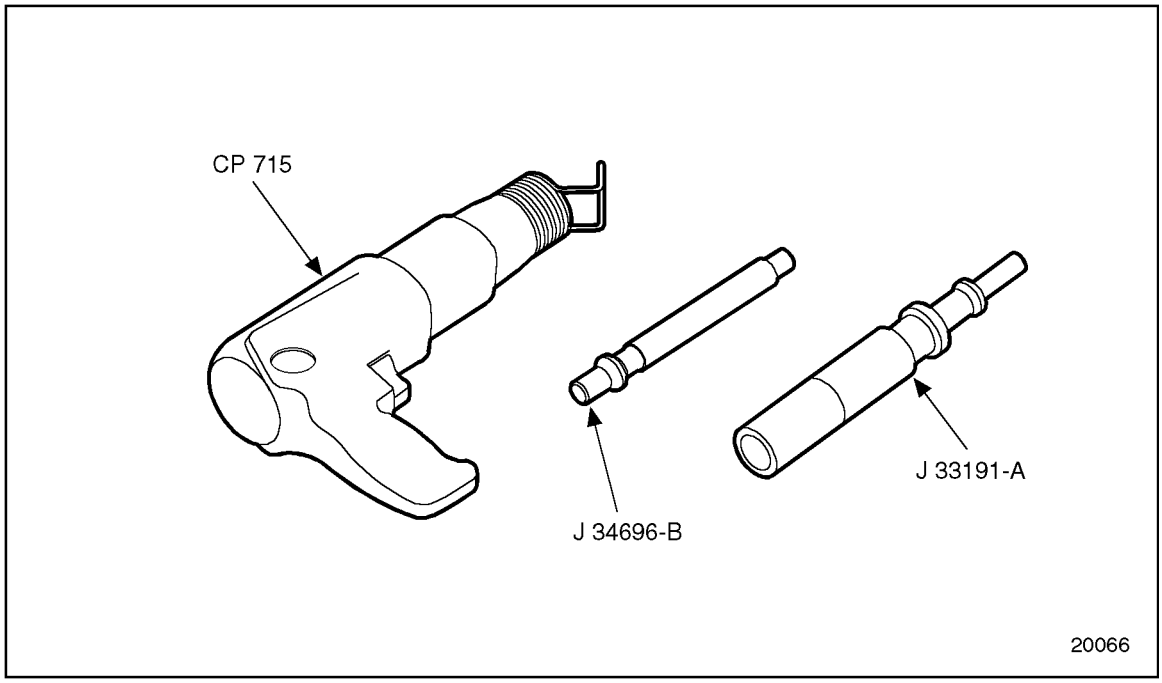

Figure 1-76 Valve Guide Removal Tools

2. Position the cylinder head, firedeck side up, on a turn over stand or supported on 102 x 102 mm (4 x 4 in.) wooden blocks on a workbench.

 Copyright © 2004 DETROIT DIESEL CORPORATION

3. Insert the tool into valve guide from the firedeck side of the cylinder head. See Figure 1-77.

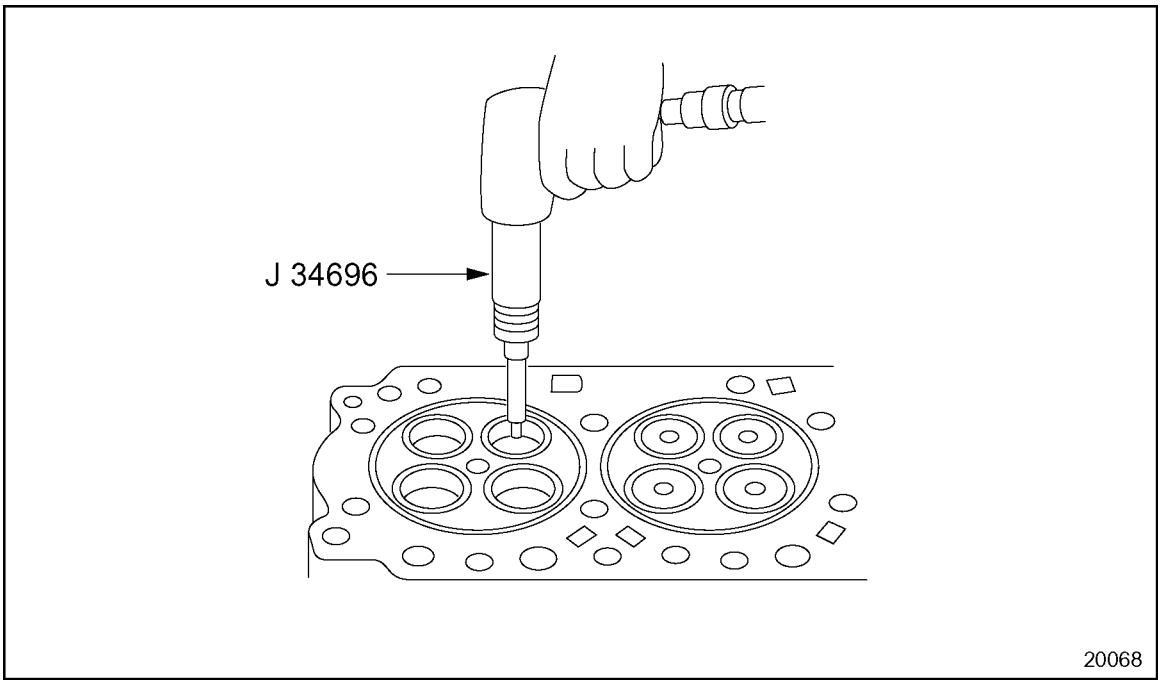

Figure 1-77 Valve Guide Removal

4. Hold the tool vertical to the cylinder head and drive the valve guide until it is free of the cylinder head.
5. Clean the valve guide bore with bore brush, J 5437 (or equivalent), to remove all gum and carbon deposits.

(Rev. 2004) *All information subject to change without notice.*
6SE483 0401 Copyright © 2004 DETROIT DIESEL CORPORATION

1.4.5 Removal of Intake and Exhaust Valve Seat Insert

As the intake and exhaust valve seats are different in size, two different tools are required for removal. Use the cam-operated valve seat remover, J 23479-460A, with collet, J 23479-100–A, to remove the larger intake valve seat insert. Use valve seat remover, J 23479-271, with collet J 23479-29 to remove the smaller exhaust valve seat insert. See Figure 1-78.

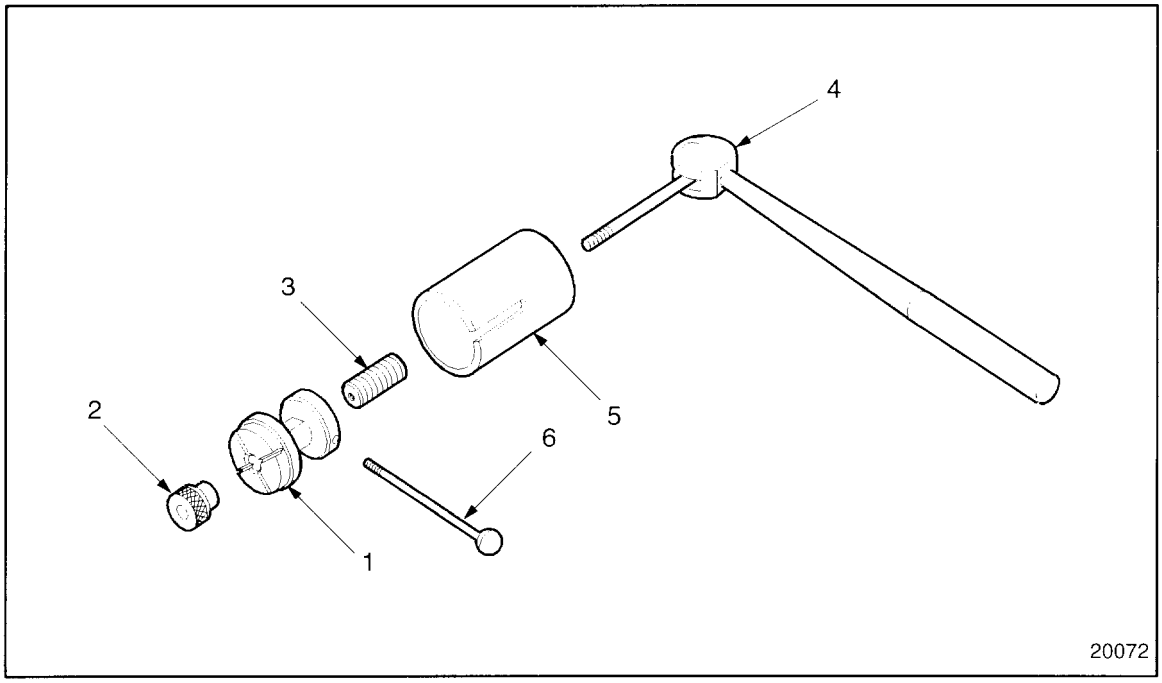

1. Collet
2. Knurled Knob
3. Spring
4. Valve Seat Insert Puller
5. Collar
6. Collet Lever

Figure 1-78 Valve Seat Insert Removal Tools

Remove the intake and exhaust valve seats as follows:

1. Place the cylinder head in a horizontal position with the valve seats facing up.

NOTICE:
Follow instructions supplied with tools J 23479-460A, J 23479-100, J 23479-271, and J 23479-29 to ensure longer tool life and unnecessary collet damage.

2. Using a new valve seat insert as a guide, turn the knurled knob on the end of the shaft to tighten and expand the collet until the valve seat insert will just slip off the collet. Refer to instructions supplied with the valve seat remover tool for correct tool operation.

 Copyright © 2004 DETROIT DIESEL CORPORATION

1.4.5.1 Inspection of Valve

The valve stems must be free from scratches or scuff marks, and, the valve faces must be free from ridges or cracks. Some pitting of the valve face is normal, and is acceptable as long as no leak paths are evident. If leak paths exist, reface the valves or install new valves. If the valve heads are warped or the valve stem is bent, replace the valves.

If suitable for reuse, a valve may be refaced as long as the valve rim width, after refacing, is not less than 2.0 mm (0.078 in.) for intake valves and 2.2 mm (0.086 in.) for exhaust valves. Refer to section ADDITIONAL INFORMATION1.A, for "Intake and Exhaust Valve" specifications which are listed in Table 1-38and listed in Table 1-40. See Figure 1-79.

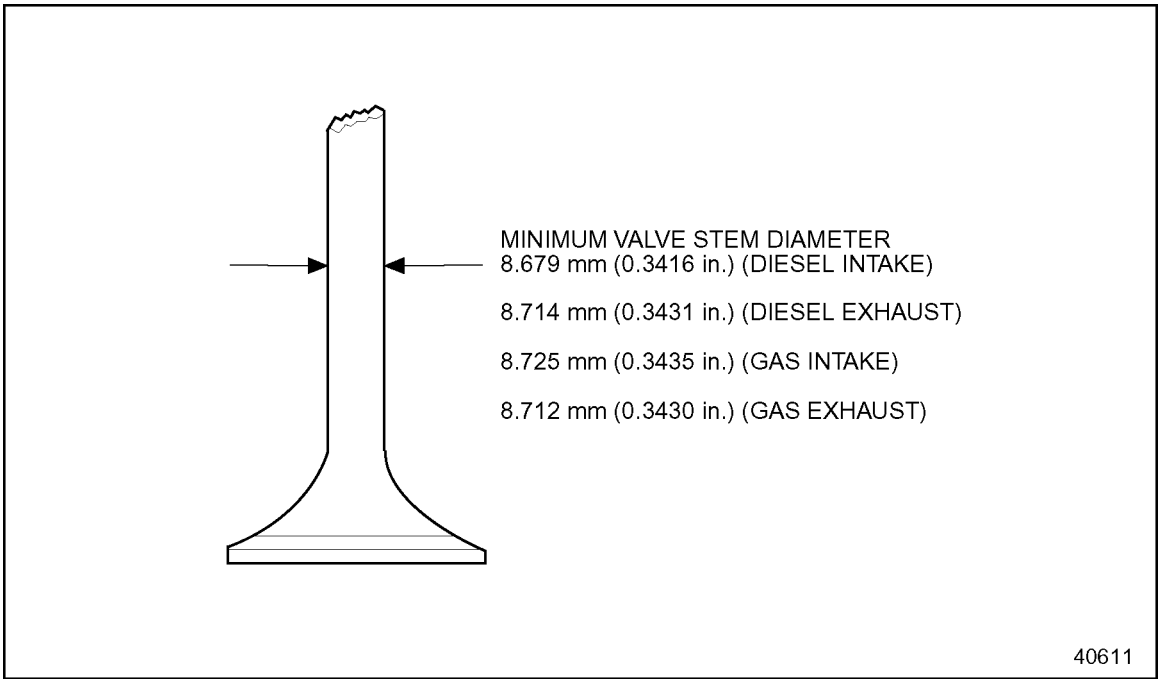

Figure 1-79 Intake and Exhaust Valve Face Refacing and Rim Width

(Rev. 2004) *All information subject to change without notice.*
6SE483 0401 Copyright © 2004 DETROIT DIESEL CORPORATION

1.4.5.2 Inspection of Valve Springs

Inspect the valve springs and replace any that are pitted or cracked. The entire spring should be inspected. When a broken spring is replaced, the rotator and valve locks for that valve and spring should also be replaced.

Use valve spring tester, J 22738-02, to test the springs. See Figure 1-80.

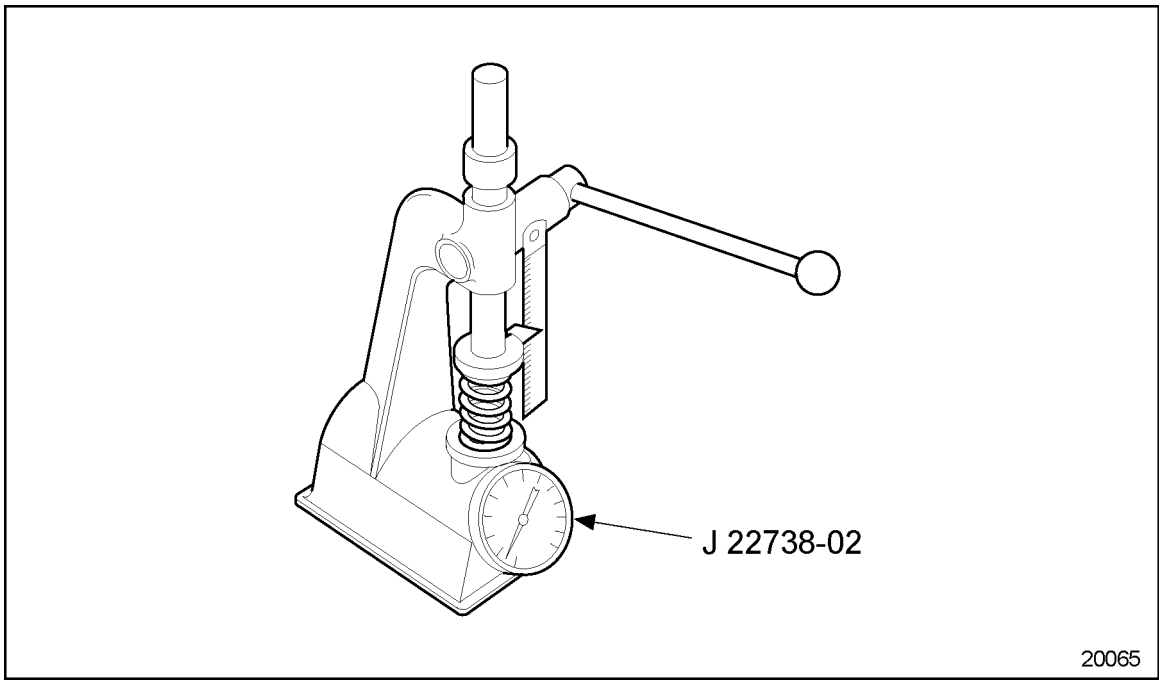

Figure 1-80 Testing Valve Spring

If the spring load is less than 280 N (63 lb) at a compressed length of 67.25 mm (2.648 in.), the spring should be replaced and the valve locks should be discarded.

1.4.5.3 Inspection of Valve Guides

Inspect the guides for cracks, chipping, scoring or excessive wear.

Measure the valve guide bore with a small hole gage or gage pin, and measure the valve stem diameter with a micrometer. Compare the measurements to determine valve stem clearance. If the clearance is greater than 0.152 mm (0.006 in.), the valve guide must be replaced.

1.4.5.4 Inspection of Valve Seat Inserts

Inspect valve seat inserts for wear, cracking or incorrect seat angle, which should be 31 degrees, standard valve seat insert thickness. See Figure 1-68.

 Copyright © 2004 DETROIT DIESEL CORPORATION

1.4.6 Installation of Intake and Exhaust Valve Seat Insert

Perform the following steps for intake and exhaust valve seat insert installation:

CAUTION:

To avoid injury from flying debris when using compressed air, wear adequate eye protection (face shield or safety goggles) and do not exceed 40 psi (276 kPa) air pressure.

1. Clean the seat insert counterbores and the new seat inserts with a suitable solvent and blow dry with compressed air.
2. Use valve seat insert installers, J 33190 (intake) and J 34983 (exhaust), to install new inserts. See Figure 1-81.

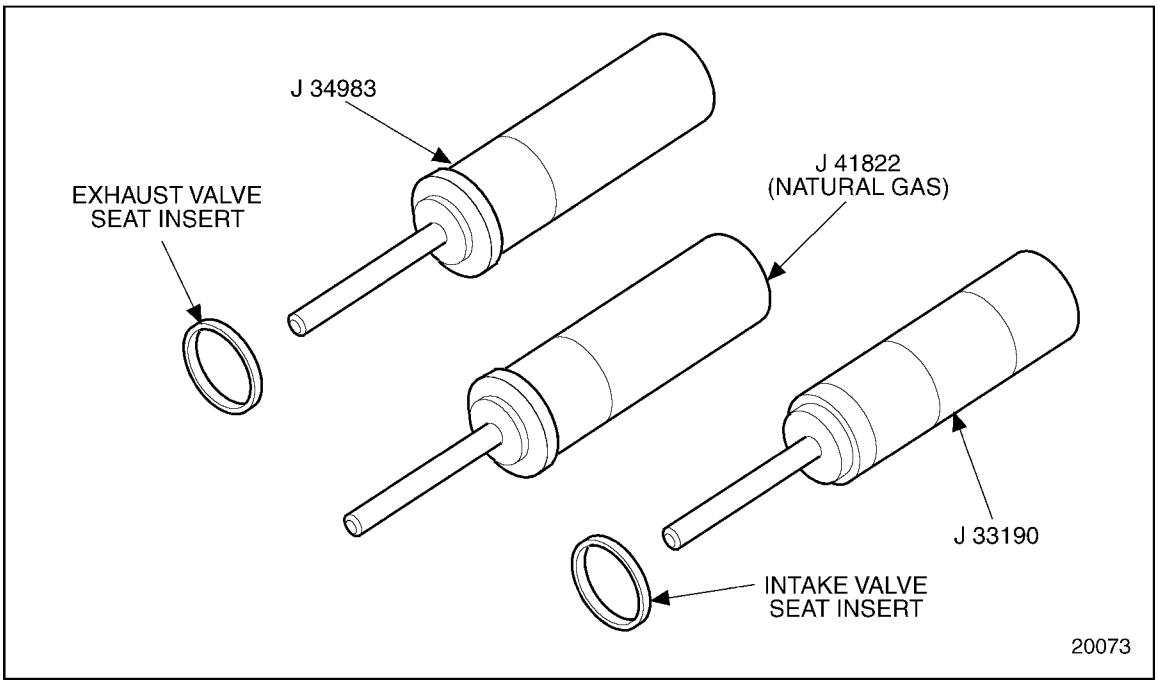

Figure 1-81 Valve Seat Insert Installation Tools

(Rev. 2004) *All information subject to change without notice.*
6SE483 0401 Copyright © 2004 DETROIT DIESEL CORPORATION

3. Start the insert squarely into its counterbore with the seat facing up. See Figure 1-82.

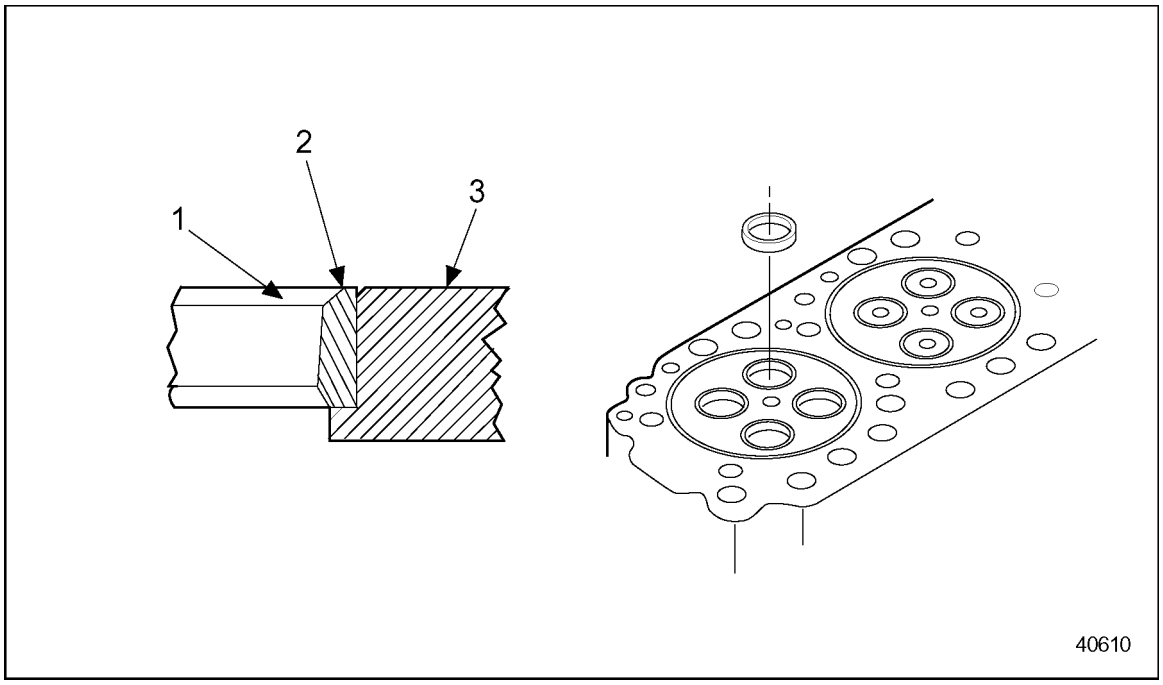

1. Seat
2. Valve Seat Insert
3. Cylinder Fire Deck

Figure 1-82 Valve Seat Insert Insertion

 Copyright © 2004 DETROIT DIESEL CORPORATION

4. Pilot the installer into the valve guide from the firedeck surface. See Figure 1-83.

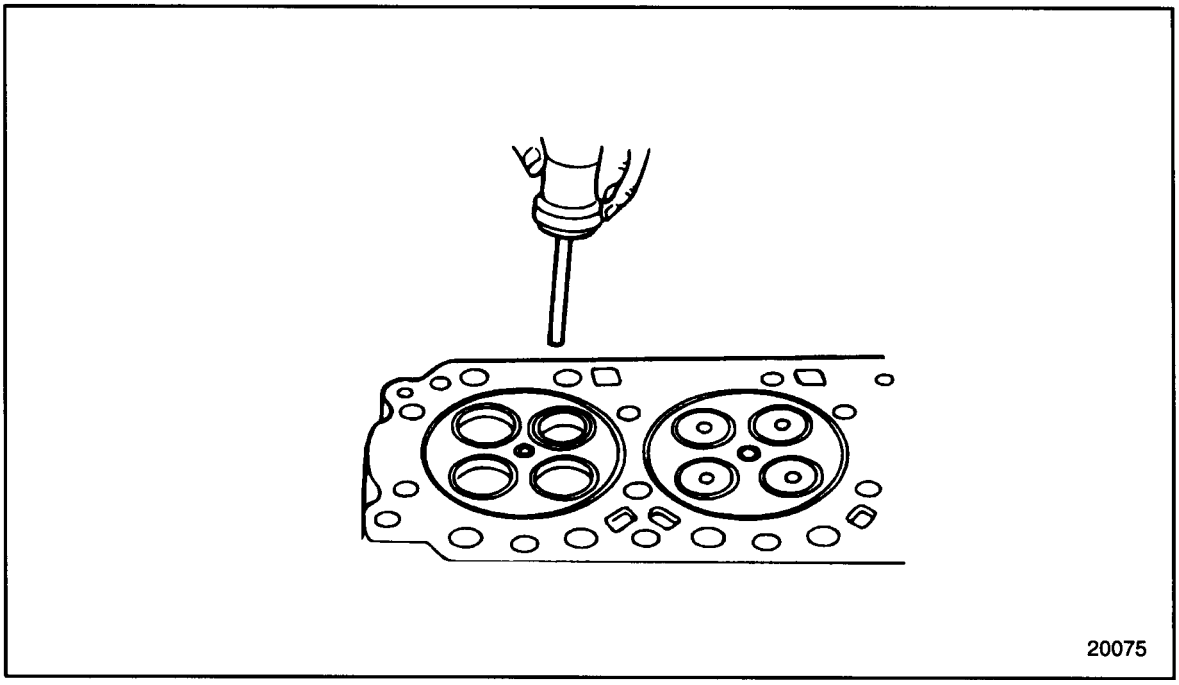

Figure 1-83 Valve Seat Insert Installation

5. Drive the insert solidly into its seat in the cylinder head. See Figure 1-84.

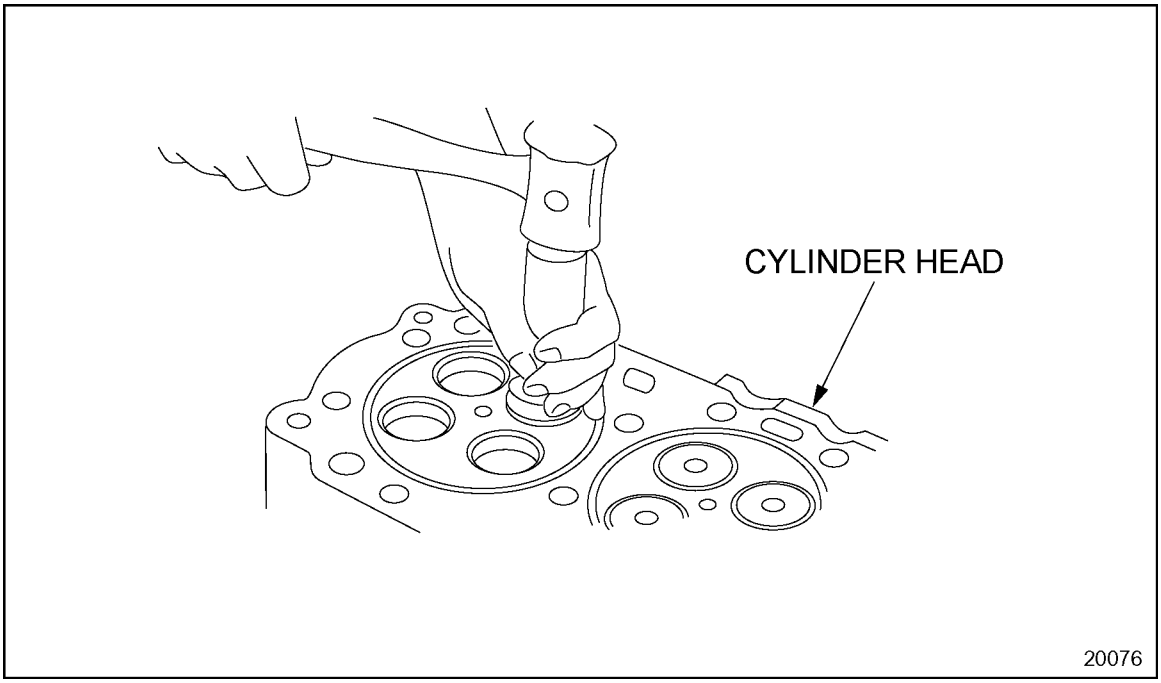

Figure 1-84 Seating Valve Seat Insert

(Rev. 2004) *All information subject to change without notice.*
6SE483 0401 Copyright © 2004 DETROIT DIESEL CORPORATION

6. Check the concentricity of valve seat with the valve guide using dial indicator, J 8165-2, and pilot, J 35623-A. See Figure 1-85.

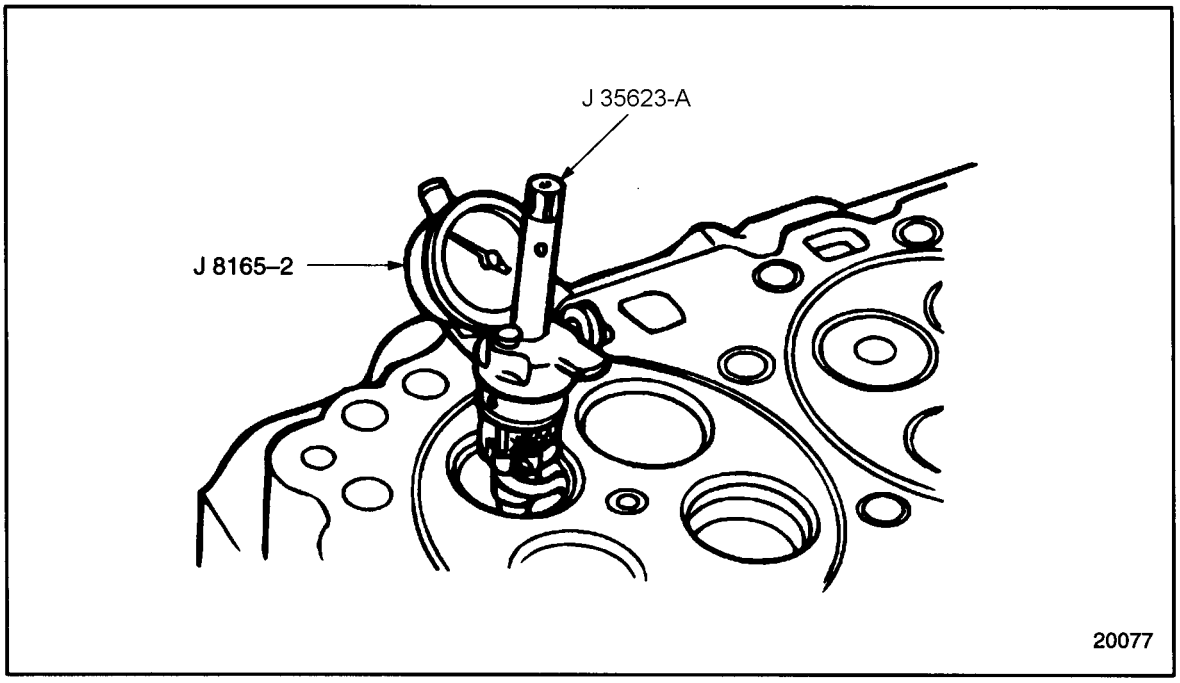

Figure 1-85 Check Valve Seat Concentricity

[a] If the concentricity is within 0.05 mm (0.002 in.), no grinding is required.

 Copyright © 2004 DETROIT DIESEL CORPORATION

[b] If the concentricity is not within 0.05 mm (0.002 in.), grind the seat only enough to true it up, being sure to lightly grind a full 360 degrees.

NOTE:
Valve seat insert grinding should be limited to light clean-up or concentricity truing. For a fine, accurate finish, the eccentric grinding method using tool J 7040-A is recommended, because the grinding wheel contacts the insert at only one point at any time, and a micrometer feed permits controlled fine adjustment. See Figure 1-86. Seats must be ground to a 31 degree angle.

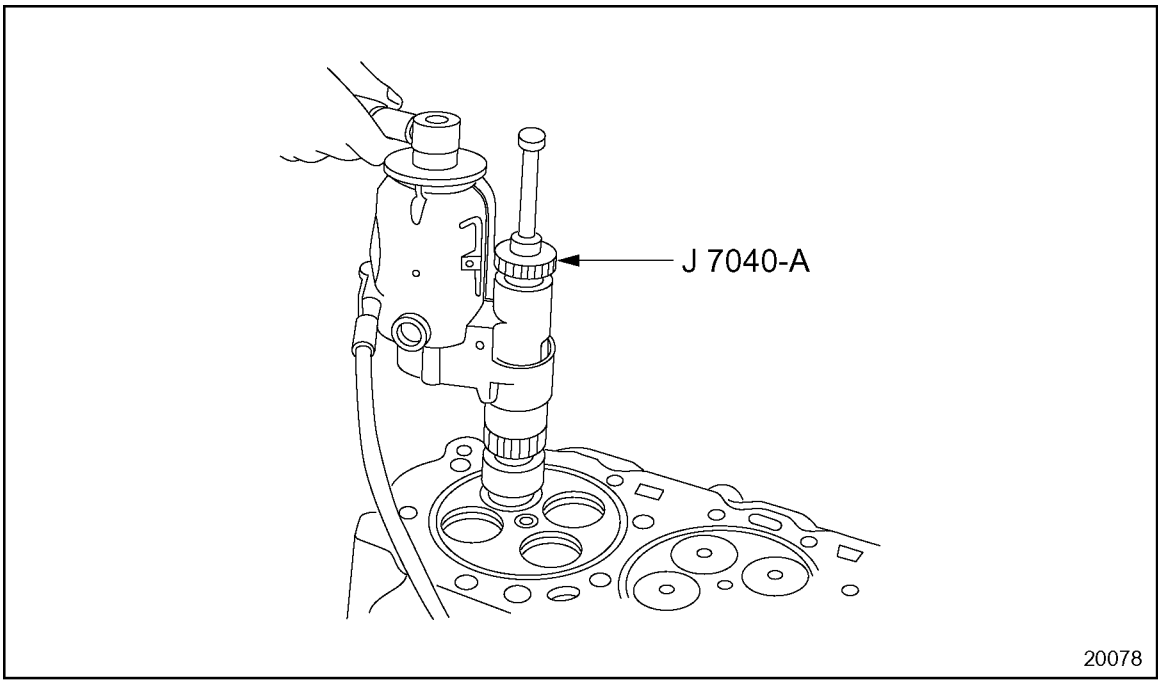

Figure 1-86 Grinding Valve Seat Insert

(Rev. 2004) *All information subject to change without notice.*
6SE483 0401 Copyright © 2004 DETROIT DIESEL CORPORATION

7. The valve head recess depth from the firedeck is increased by valve and/or insert grinding. It should be checked with a sled gage, J 22273-01 (or equivalent). See Figure 1-87.

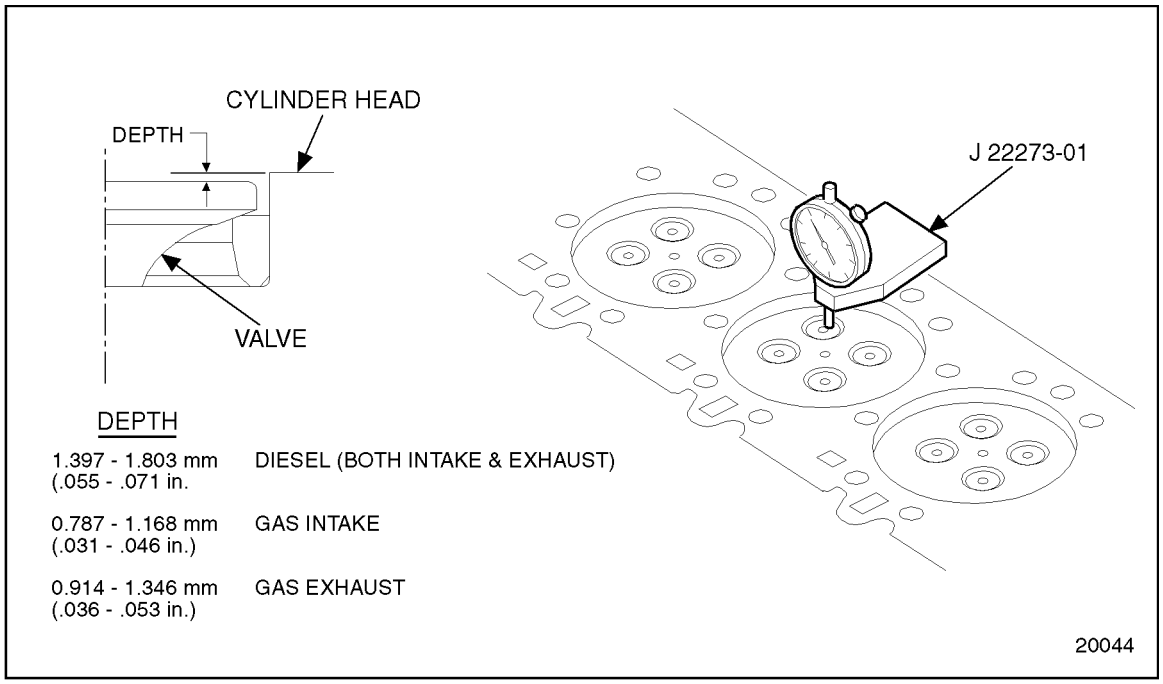

Figure 1-87 Measuring Valve Head Recess Depth

[a] If the diesel intake exhaust valve head recess depth is not between 1.4 to 1.8 mm (0.055-0.071 in.), the valve and seat must be replaced.

[b] If the gas intake valve head recess depth is between 0.79 to 1.17 mm (0.031-0.046 in.), the valve and seat are correctly installed.

[c] If the gas exhaust valve head recess depth is not between 0.976-1.4 mm (0.030-0.053 in.), the intake 0.79-1.17 mm (0.031 -0.046 in.) valve and seat must be replaced for the Series 60G engine.

8. After light clean-up, thoroughly clean the valve seat with fuel oil and blow dry with compressed air. Check seat-to-valve face contact by applying a light coat of Prussian Blue (or equivalent) to the valve seat land. Insert the valve in the guide and "bounce" the valve head on the seat insert without rotating the valve. A full 360° contact line should appear approximately centered on the valve face.

 Copyright © 2004 DETROIT DIESEL CORPORATION

1.4.7 Installation of Valve Guide

Perform the following steps for valve guide installation:

NOTE:
Valve guides are not replaceable on natural gas or heat exchanger-cooled pleasure craft marine engines.

1. Start the chamfered end of the valve guide into the cylinder head from the top. See Figure 1-88.

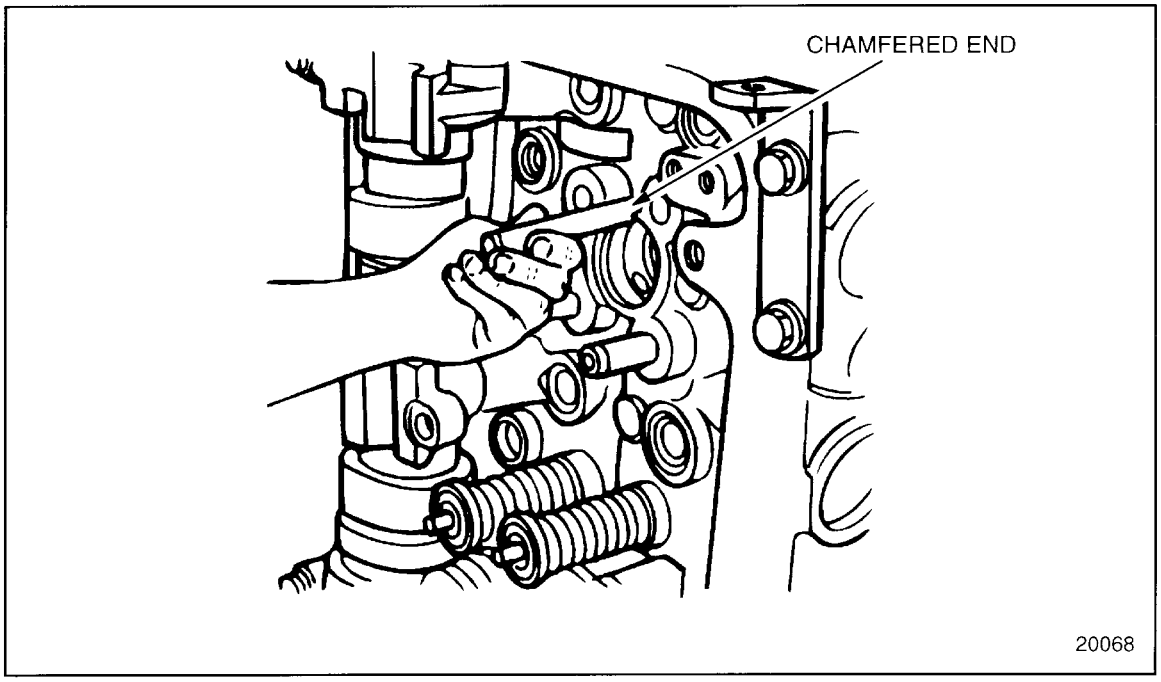

Figure 1-88 Valve Guide Installation

(Rev. 2004) *All information subject to change without notice.*
6SE483 0401 Copyright © 2004 DETROIT DIESEL CORPORATION

2. Insert the driver into an air chisel. Insert the driver into the valve guide limiting sleeve J 33191-A and install this assembly over the valve guide. Drive the guide into the cylinder head until the driver bottoms in the limiting sleeve. See Figure 1-89.

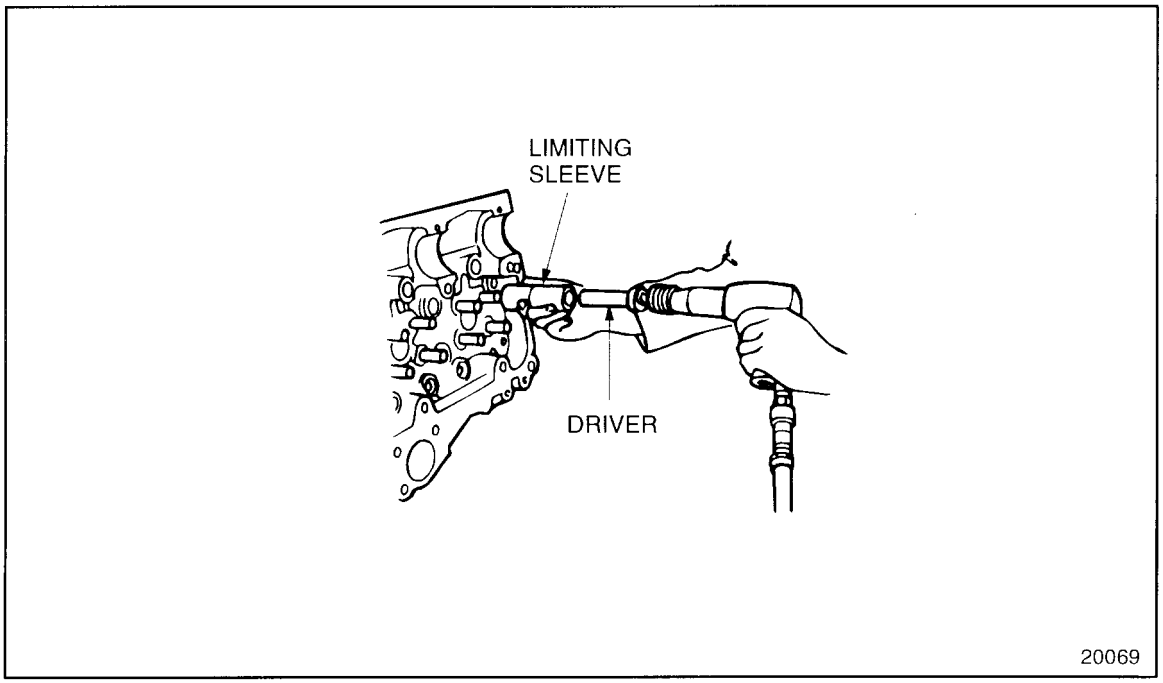

Figure 1-89 Valve Guide Installation

3. Properly used, the installer ensures the correct protrusion of the valve guide from the cylinder head of 37.75 mm (1.486 in.).

 Copyright © 2004 DETROIT DIESEL CORPORATION

1.4.8 Installation of Valve, Spring, Seal and Rotator

Perform the following steps for valve installation:

1. Position the cylinder head vertically on the overhaul stand. Lubricate the valve stems with clean engine lubricating oil and slide them into their respective valve guides and against the valve seats. If reusing valves, install them to their original positions.
2. Install the valve spring seat over the valve guide. Install the valve stem oil seals using valve stem oil seal installation tools. See Figure 1-90.

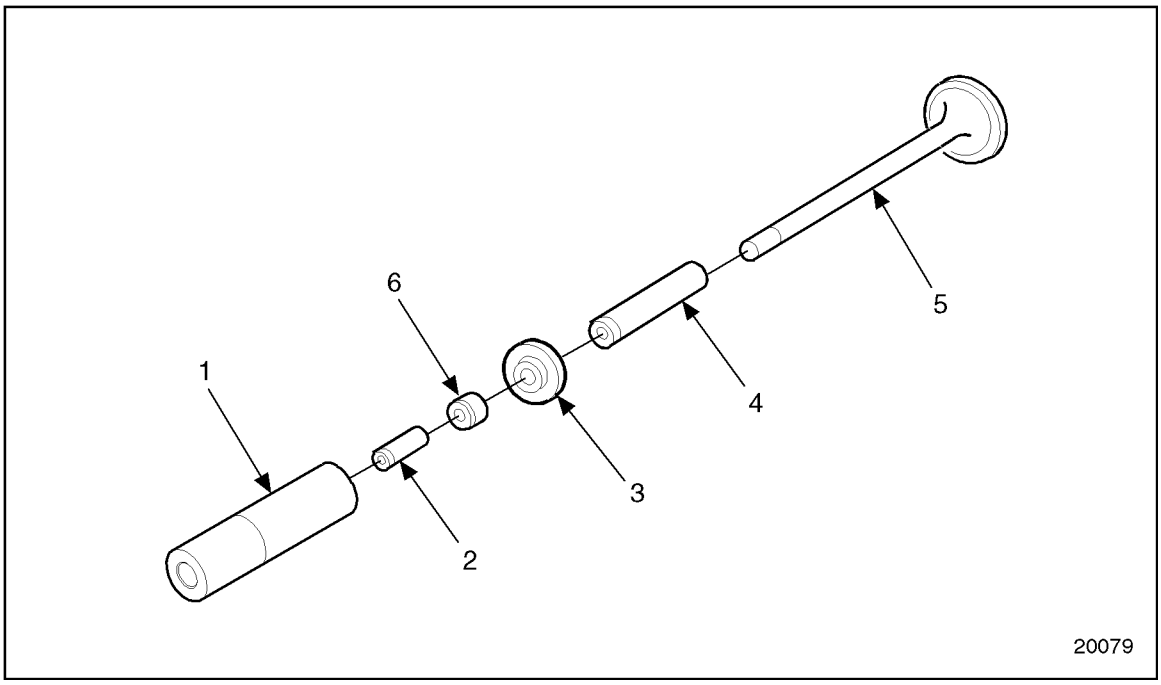

1. Valve Stem Seal Installer
2. Oil Seal Protector Cap
3. Valve Spring Seat
4. Valve Guide
5. Valve
6. Valve Stem Oil Seal

Figure 1-90 Valve Stem Oil Seal Installation Tools

(Rev. 2004) *All information subject to change without notice.*
6SE483 0401 Copyright © 2004 DETROIT DIESEL CORPORATION

3. Check the length of the plastic seal protector cap relative to the lock groove on the valve stem. If the seal protector cap extends more than 1.6 mm (1/16 in.) beyond the groove, trim off the excess length of the cap. See Figure 1-91.

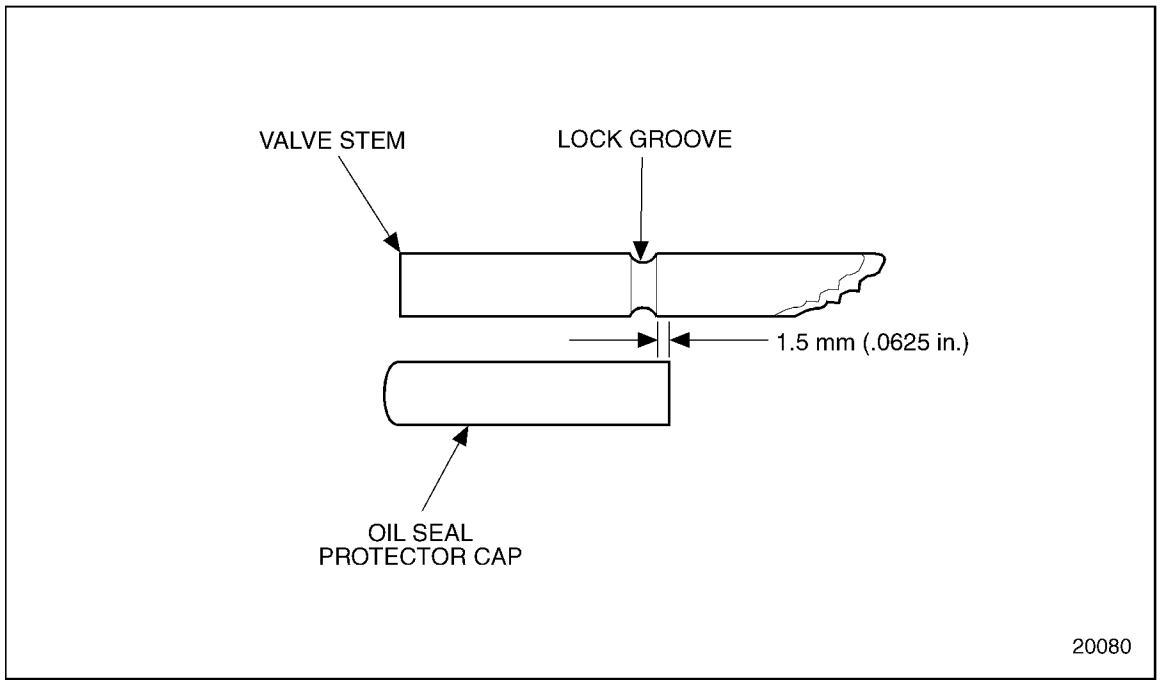

Figure 1-91 Oil Seal Protection Cap Sizing

 Copyright © 2004 DETROIT DIESEL CORPORATION

4. Install the cap over the valve stem. See Figure 1-92.

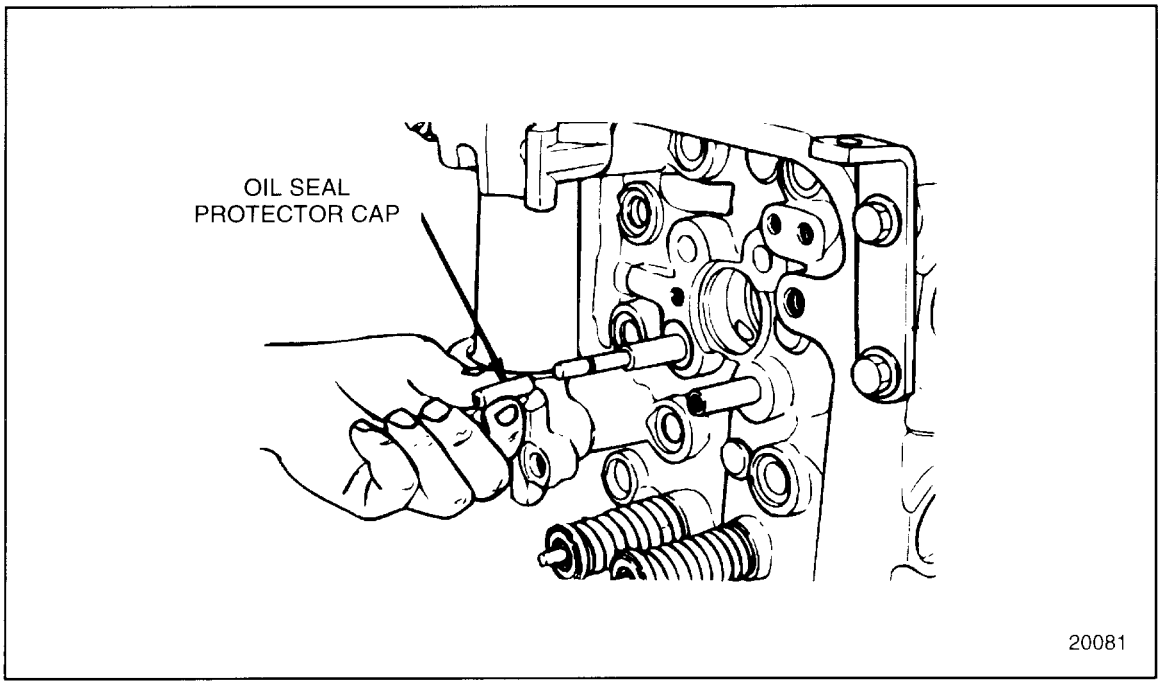

Figure 1-92 Oil Seal Protection Cap Installation

(Rev. 2004) *All information subject to change without notice.*
6SE483 0401 Copyright © 2004 DETROIT DIESEL CORPORATION

NOTICE:
Ensure all valve spring seats have been installed before the valve stem seal is installed.

5. The valve stem oil seal may be installed with or without oil. Push the seal over the protector. See Figure 1-93.

NOTE:
The valve stem oil seal on the natural gas engine has a larger inside diameter than the diesel engine. The seal portion of the natural gas oil seal is black in color.

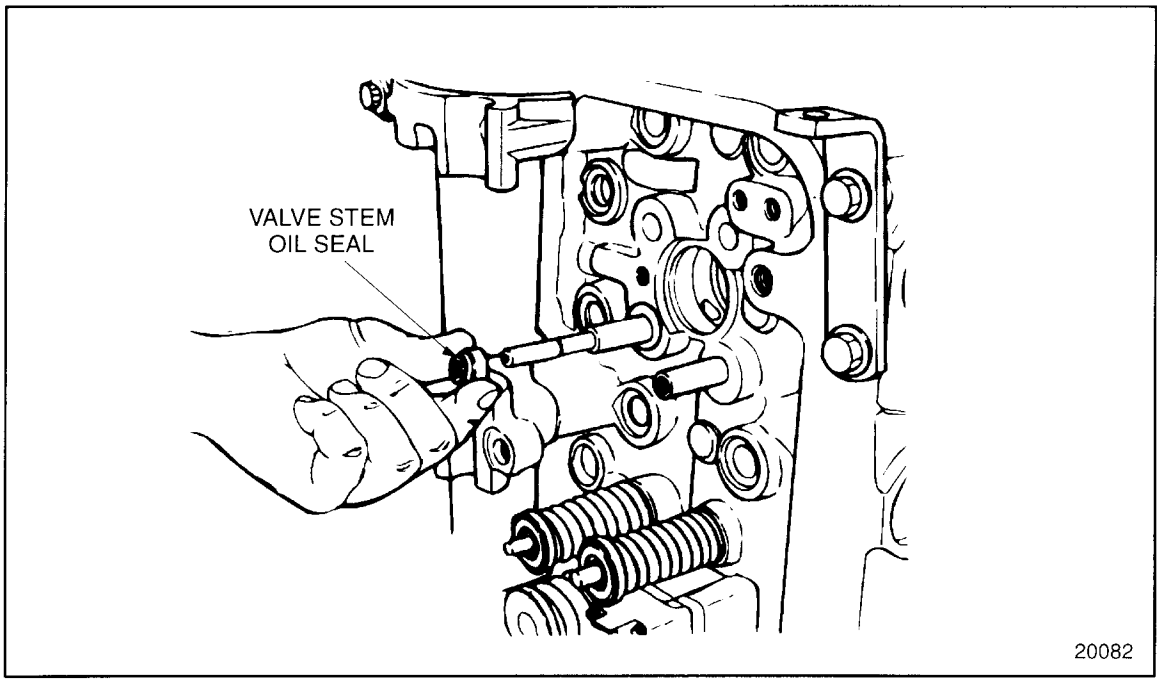

Figure 1-93 Valve Stem Oil Seal Installation

 Copyright © 2004 DETROIT DIESEL CORPORATION

6. Push the seal down on the valve stem using the seal installer, J 39109, while holding the valve head against the seal. See Figure 1-94.

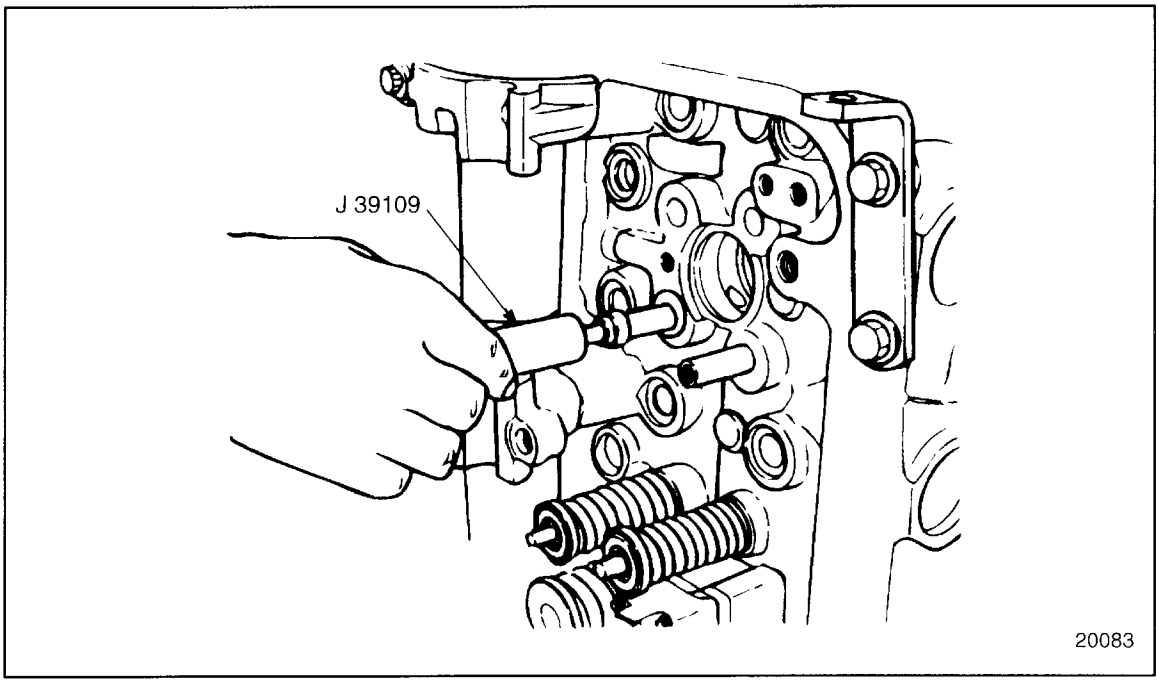

Figure 1-94 Valve Stem Oil Seal Installer

7. When the installer tool contacts the cylinder head, the seal is correctly positioned. Be sure the installer is square against the cylinder head. Remove the seal installer and protector cap.

(Rev. 2004) *All information subject to change without notice.*
6SE483 0401 Copyright © 2004 DETROIT DIESEL CORPORATION

8. Install the valve spring and rotator. See Figure 1-95. If reusing parts, install them to their original positions.

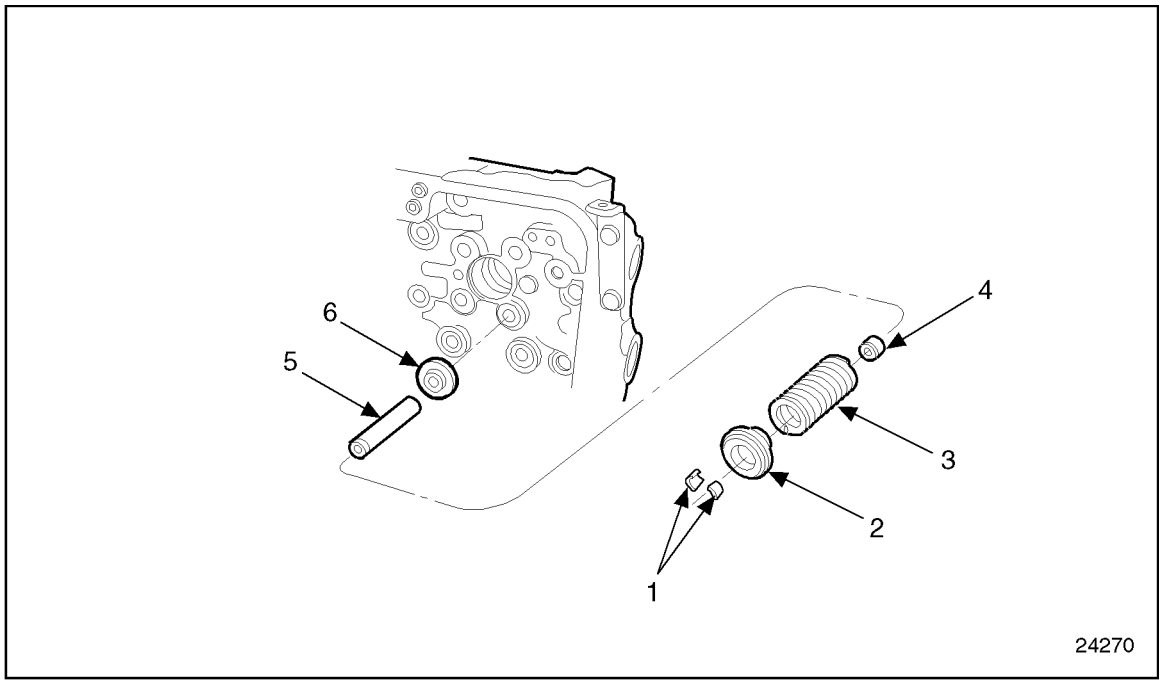

1. Valve Locks
2. Valve Rotator
3. Valve Spring
4. Valve Stem Oil Seal
5. Valve Guide
6. Valve Spring Seat

Figure 1-95 Valve Spring and Related Parts

9. Using the valve spring compressor tool, J 8062, compress the valve spring only as much as required to install the valve locks. After installing the valve locks, rap the end of the valve stem sharply with a plastic mallet to seat the valve locks.

NOTE:
Always install new valve stem locks when installing valves.

NOTE:
Be sure the valve rotator is properly centered and aligned to avoid scoring the valve stem. Do not compress the spring any more than necessary to install the locks, to avoid damaging the oil seal.

 Copyright © 2004 DETROIT DIESEL CORPORATION

10. After all of the valves are installed, check the spring opening pressure on each valve using spring load gage. See Figure 1-96.

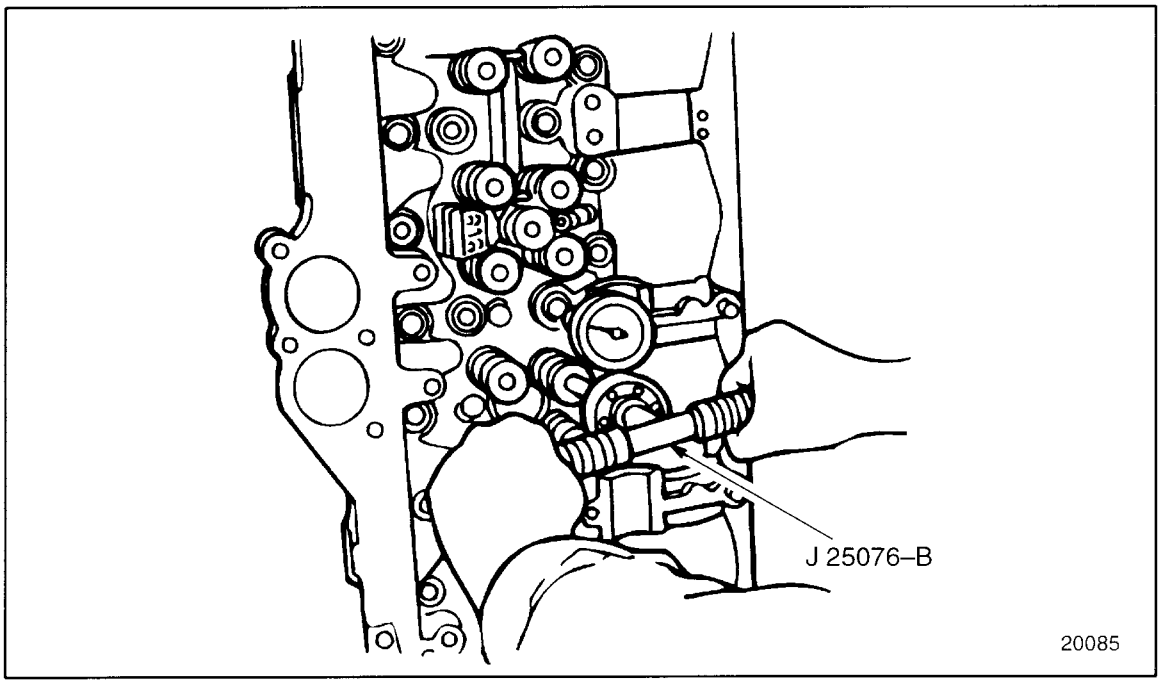

Figure 1-96 Checking Valve Spring Load

(Rev. 2004) *All information subject to change without notice.*
6SE483 0401 Copyright © 2004 DETROIT DIESEL CORPORATION

11. Note the gage reading when the valve just starts to unseat. The force required to unseat the valve must not be less than 280 N (63 lb).
12. Remove the cylinder head from the overhaul stand and install it on the engine. Refer to section 1.2.5.
13. Install the camshaft and rocker arm assemblies. Lightly lubricate the overhead assemblies with clean engine oil. Refer to section 1.24.5.
14. If the engine is equipped with a Jake Brake®, install the brake. Refer to section 1.30.5.
15. Adjust the valve clearance and injector timing. Refer to section 12.2.
16. If the engine is equipped with a Jake Brake®, lash the brake. Refer to section 12.2.
17. Install any other components that were removed.
18. Fill the engine crankcase (refer to section 13.13.1) with the proper lubricant. Refer to section 5.2.1.
19. Close any drain cocks that were opened and fill the cooling system. Refer to section 13.13.4. Purge the air from the system using the vent in the thermostat housing. Complete filling of the cooling system is essential for proper engine operation.

⚠ CAUTION:

Diesel engine exhaust and some of its constituents are known to the State of California to cause cancer, birth defects, and other reproductive harm.

- ☐ **Always start and operate an engine in a well ventilated area.**
- ☐ **If operating an engine in an enclosed area, vent the exhaust to the outside.**
- ☐ **Do not modify or tamper with the exhaust system or emission control system.**

20. Start the engine and check for leaks.

 Copyright © 2004 DETROIT DIESEL CORPORATION

1.5 ENGINE LIFTER BRACKETS

A total of three engine lifter brackets are installed on each Series 60 engine and are utilized when removing and replacing the engine.See Figure 1-97 and see Figure 1-98.

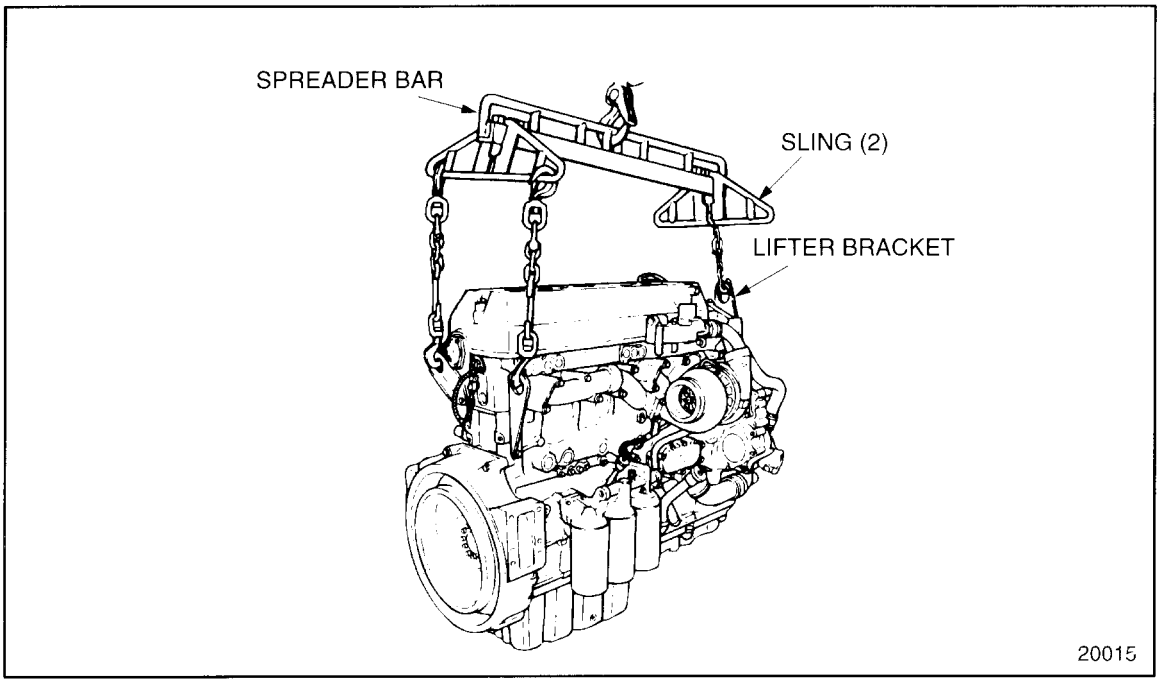

Figure 1-97 Lifting Engine

(Rev. 2004) *All information subject to change without notice.*
6SE483 0401 Copyright © 2004 DETROIT DIESEL CORPORATION

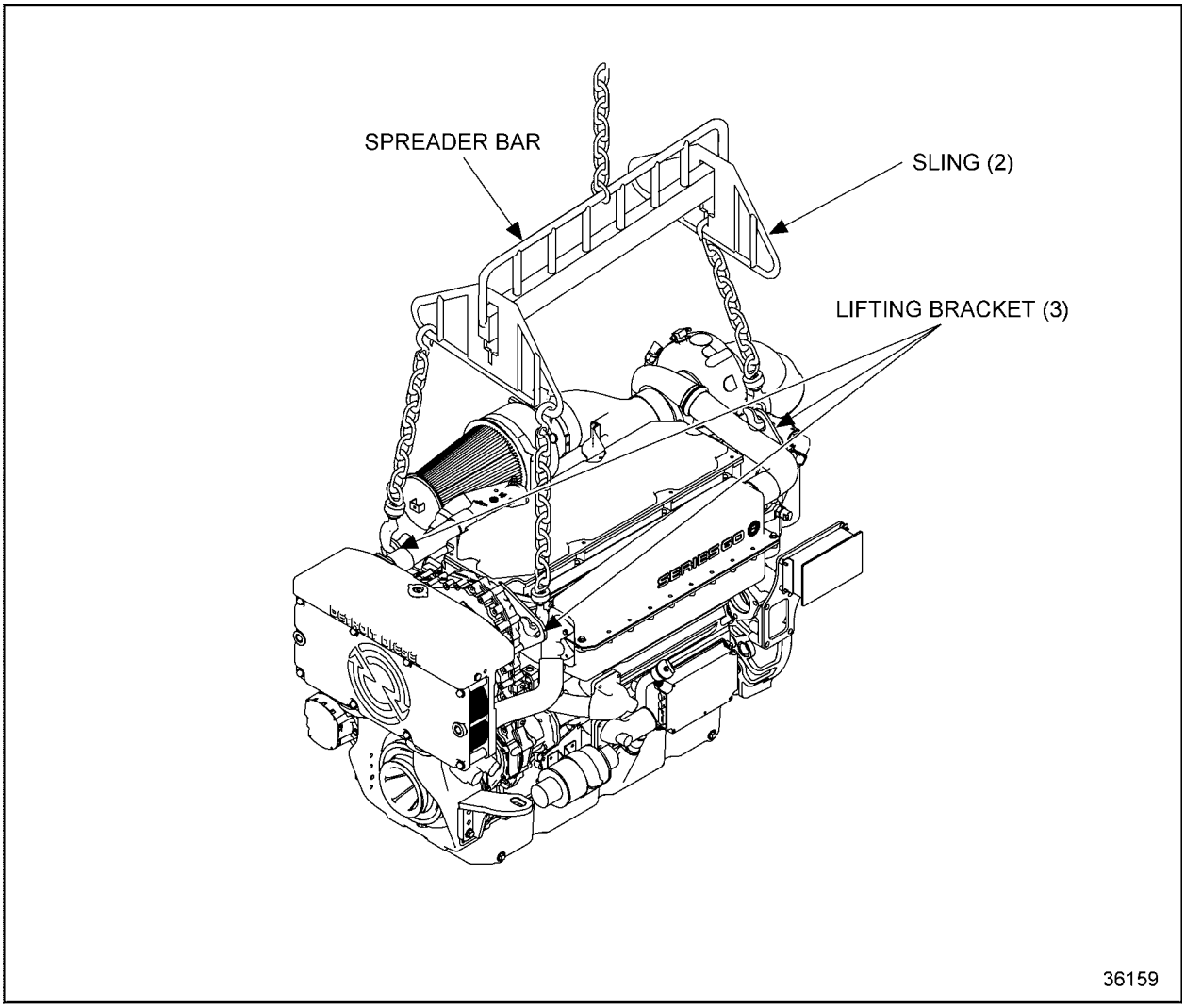

Figure 1-98 Lifting Heat Exchanger-Cooled Pleasure Craft Marine Engine

 Copyright © 2004 DETROIT DIESEL CORPORATION

CAUTION:

To avoid injury from a falling engine, do not use the engine lifter brackets alone when lifting the engine with a marine gear, main alternator, engine skid, engine module, radiator, or similar component attached. The engine lifter brackets are designed to lift the engine only.

NOTICE:

To lift the engine, use a suitable lifting device. See Figure 1-97. A spreader bar should be used with a sling and adequate chain hoist when lifting any engine. The lifting device should be adjusted so the lifting hooks are vertical to prevent bending the engine lift brackets. To ensure proper weight distribution, all three engine lift brackets provided must be used in lifting the engine. Be sure the spreader bar is adequate to prevent lifter brackets from contacting the engine rocker cover and causing damage.

A lifter bracket should always be reinstalled whenever removal is necessary. See Figure 1-99 and see Figure 1-100.

(Rev. 2004) *All information subject to change without notice.*
6SE483 0401 Copyright © 2004 DETROIT DIESEL CORPORATION

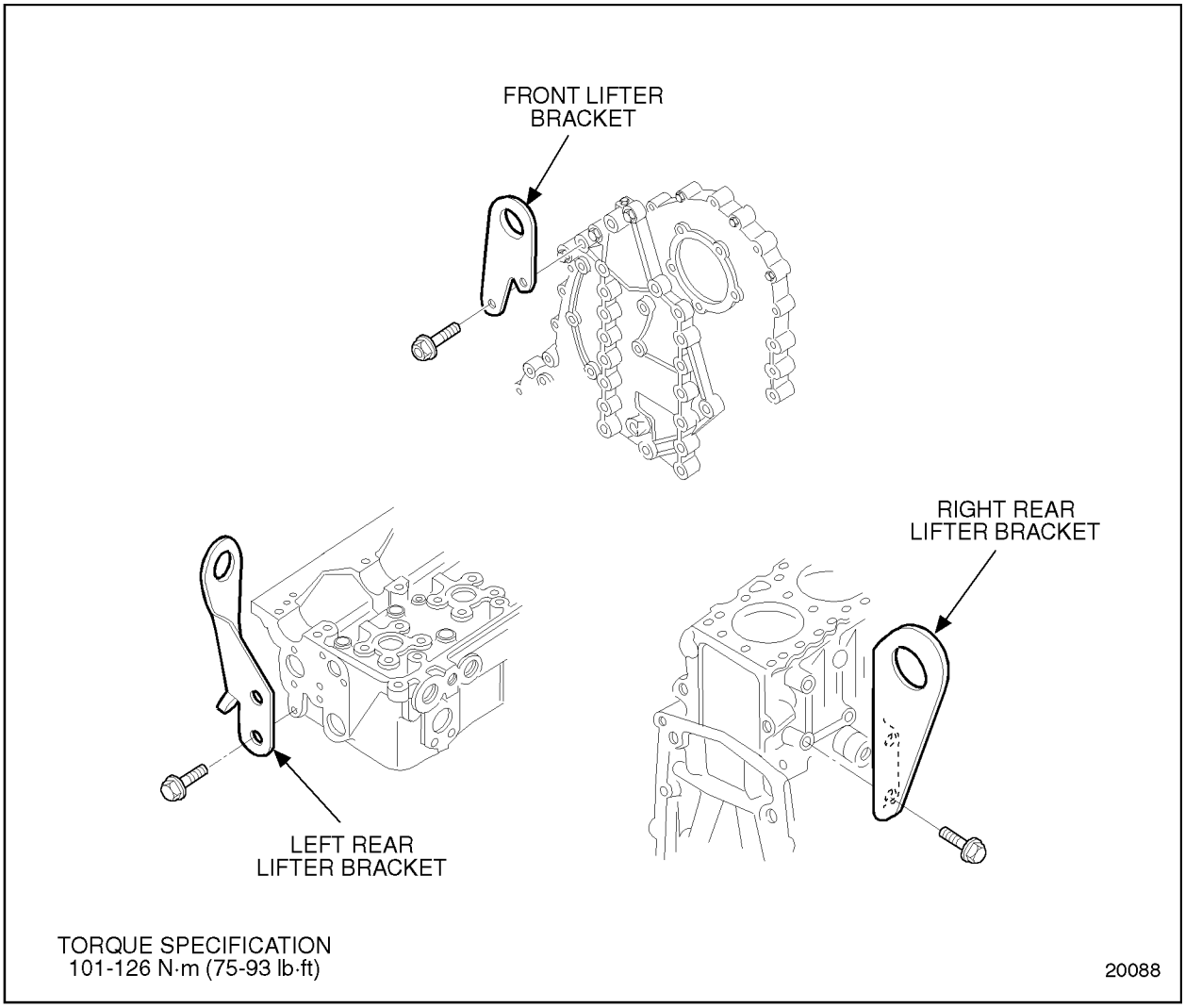

Figure 1-99 Engine Lifter Brackets

 Copyright © 2004 DETROIT DIESEL CORPORATION

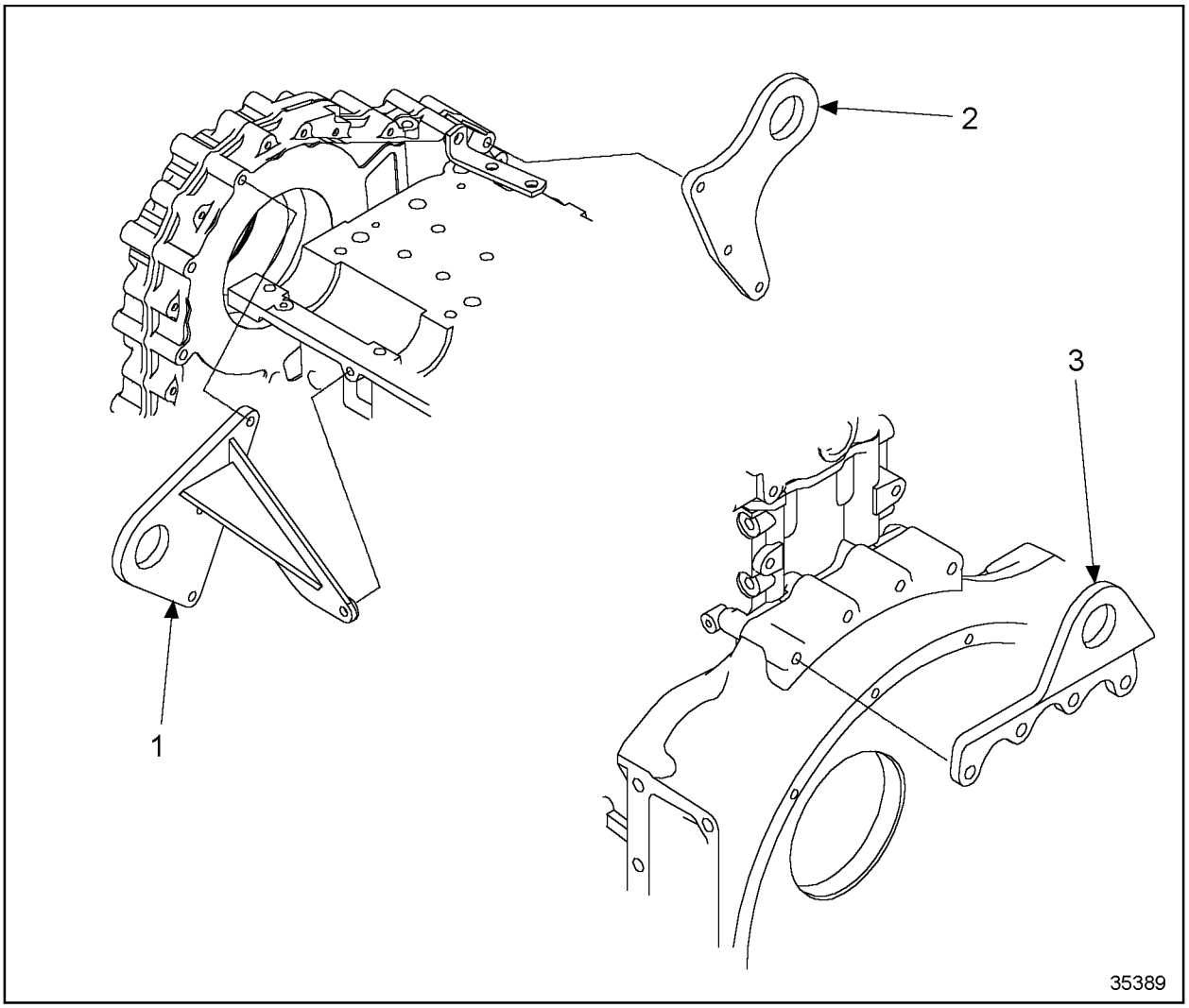

1. Left Front Lifter Bracket
2. Right Front Lifter Bracket
3. Rear Lifter Bracket

Figure 1-100 Pleasure Craft Marine Engine Lifter Brackets

(Rev. 2004) *All information subject to change without notice.*
6SE483 0401 Copyright © 2004 DETROIT DIESEL CORPORATION

On some older installations, the front engine lifter bracket may be integral with the fan support bracket. See Figure 1-101.

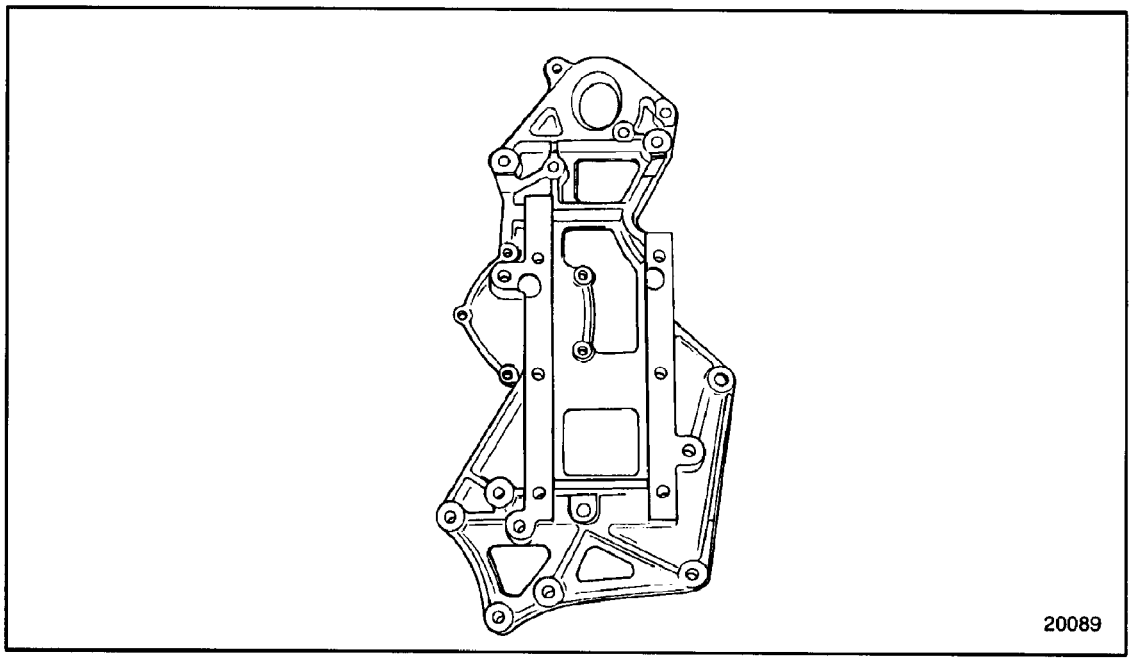

Figure 1-101 Fan Support and Engine Lifter Bracket

 Copyright © 2004 DETROIT DIESEL CORPORATION

1.5.1 Repair or Replacement of the Lifter Bracket

To determine if repair is possible or replacement is necessary, perform the following procedure. See Figure 1-102.

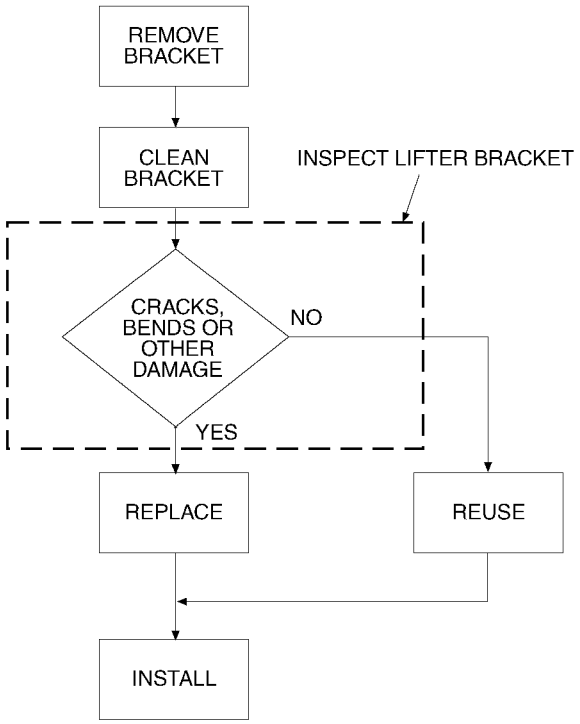

Figure 1-102 Flowchart for Repair or Replacement of Lifter Bracket

(Rev. 2004) *All information subject to change without notice.*
6SE483 0401 Copyright © 2004 DETROIT DIESEL CORPORATION

1.5.2 Removal and Cleaning of Lifter Bracket

Perform the following steps for lifter bracket removal:

1. Remove the bolts securing the lifter bracket to the engine.
2. On applications with the integral fan support and engine lifter bracket, remove the fan. Refer to section 1.10.2.

1.5.2.1 Inspection of Lifter Bracket

Perform the following for lifter bracket inspection:

CAUTION:

To avoid injury from a falling engine, do not use a damaged lifter bracket when lifting the engine.

1. Inspect the lifter brackets for cracks, bending or other damage.
2. Replace the bracket if any of these conditions exist.

1.5.3 Installation of Lifter Bracket

Perform the following steps for lifter bracket installation:

1. Install the bracket to the engine. Torque the mounting bolts to 101-126 N·m (75-93 lb·ft).
2. Install the fan support, heat exchanger support, or charge air cooler support bracket, refer to section 1.10.3.

 Copyright © 2004 DETROIT DIESEL CORPORATION

1.6 ROCKER COVER

The rocker cover completely encloses the valve and injector operating mechanism on top of the cylinder head (and in some cases an engine brake), including the overhead camshaft.

Depending on the installation, the rocker cover may be a one-piece, two-piece or three-piece design. See Figure 1-104, see Figure 1-105, and see Figure 1-106.

The one-piece rocker cover is molded of a sound-dampening, fiberglass-reinforced, synthetic material. It is internally ribbed to distribute the hold-down bolt clamp load for effective, full perimeter sealing. See Figure 1-103.

Effective July 1993, a breather baffle is installed on the low-profile aluminum rocker cover.

NOTE:
Effective May 1999, all Series 60 engines are built with a reusable rocker cover gasket. This gasket does not need to be replaced at the time of removal provided there is not any damage observed.

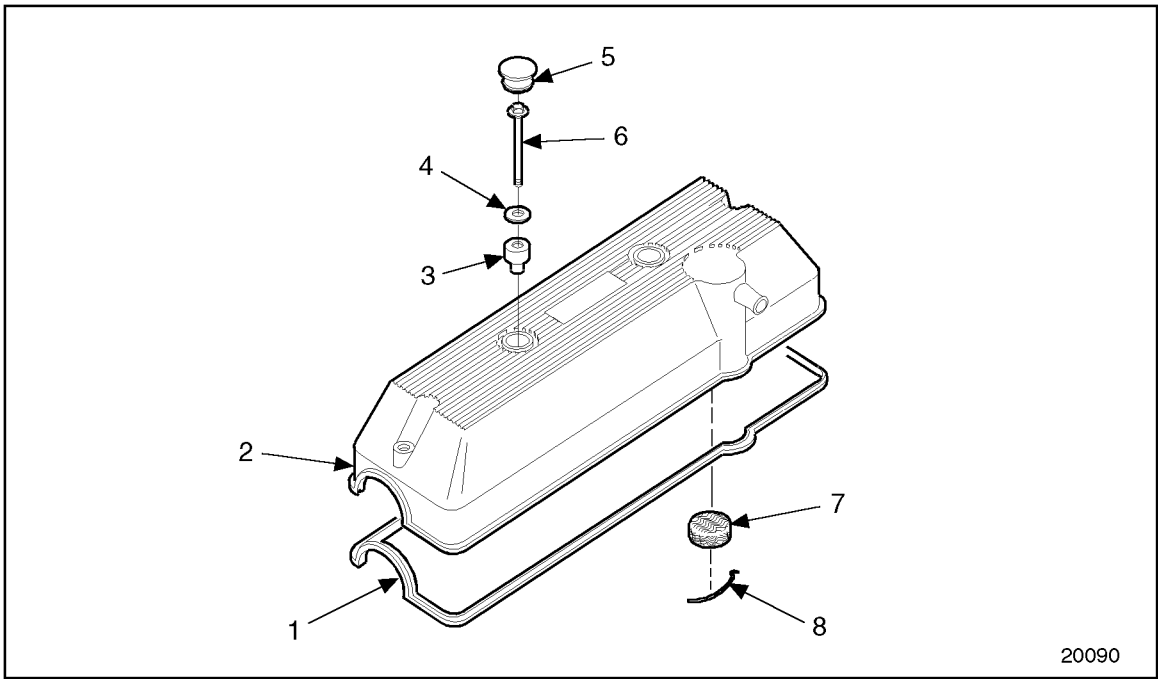

1. Gasket
2. Rocker Cover
3. Isolator
4. Washer
5. Cover Plug
6. Bolt
7. Element
8. Clip

Figure 1-103 One-piece Rocker Cover - Series 60 Diesel Engine

(Rev. 2004) *All information subject to change without notice.*
6SE483 0401 Copyright © 2004 DETROIT DIESEL CORPORATION

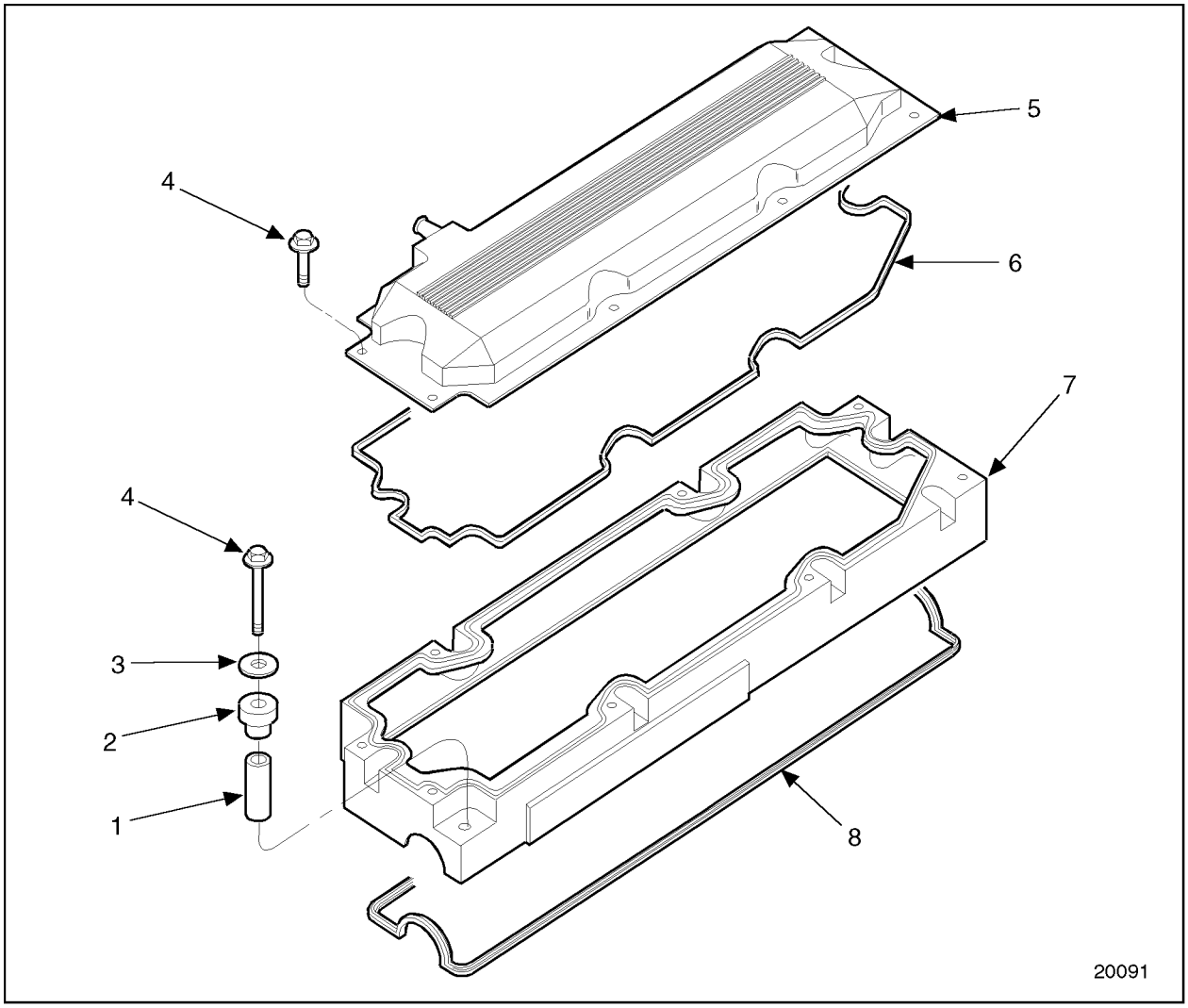

1. Limiting Sleeve
2. Isolator
3. Washer
4. Bolt
5. Rocker Cover Cap
6. Diamond-Shaped Seal
7. Rocker Cover Base
8. Isolator Rim Seal

Figure 1-104 Two-piece Rocker Cover - Series 60 Diesel Engine

 Copyright © 2004 DETROIT DIESEL CORPORATION

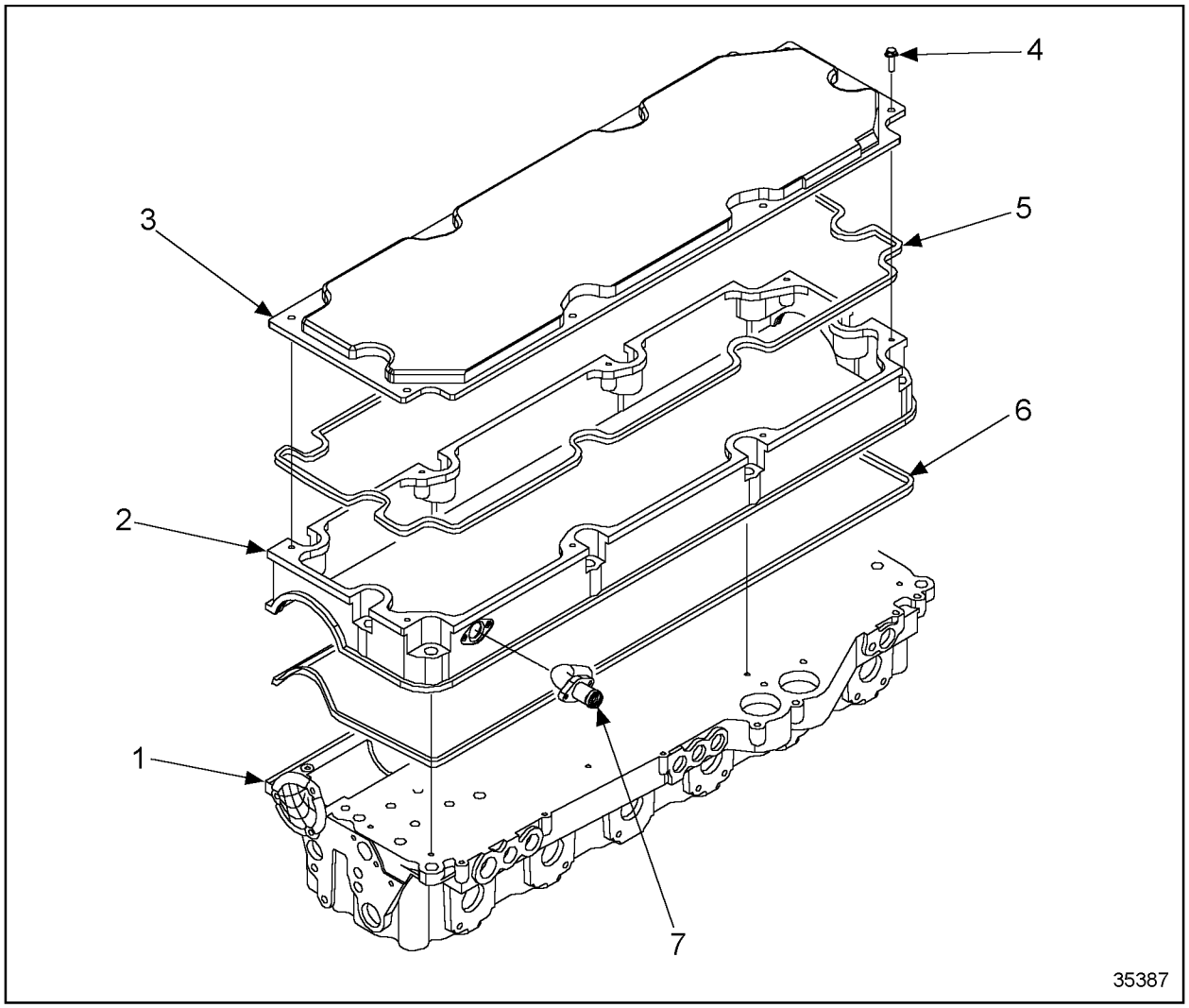

1. Cylinder Head
2. Rocker Cover Base
3. Rocker Cover Cap
4. Bolt
5. Gasket
6. Isolator Rim Seal
7. Ventilation Fitting

Figure 1-105 Three-piece Rocker Cover - (Heat Exchanger-Cooled Marine Engine)

(Rev. 2004) *All information subject to change without notice.*
6SE483 0401 Copyright © 2004 DETROIT DIESEL CORPORATION

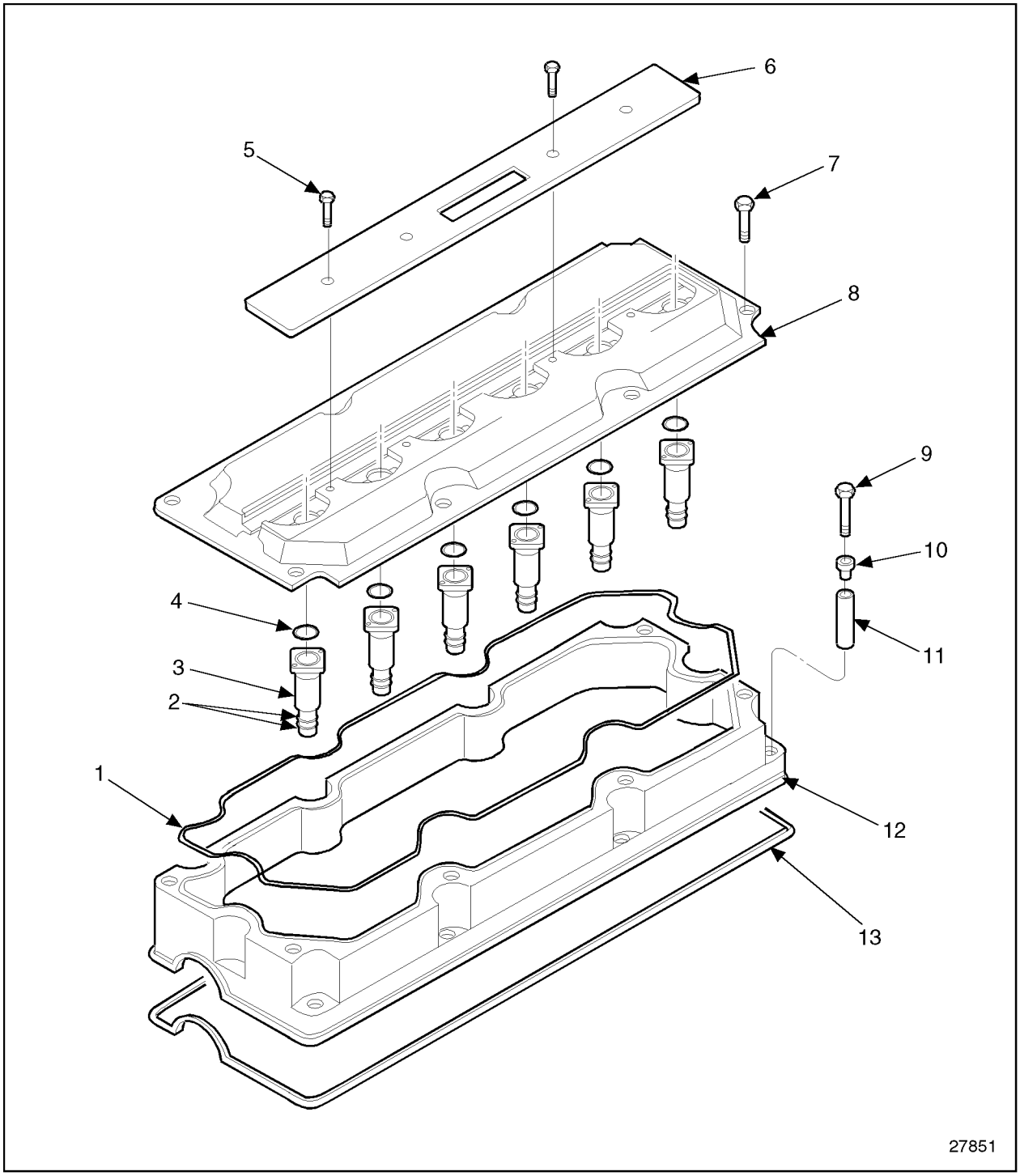

 Copyright © 2004 DETROIT DIESEL CORPORATION

1. Gasket
2. Seal Ring
3. Tube
4. Seal Ring
5. Screw
6. Cover
7. Bolt
8. Cover
9. Bolt
10. Isolator
11. Spacer
12. Rocker Cover Base
13. Gasket

Figure 1-106 Two Piece Rocker Cover - Series 60G Engine with Coil Over Plug Ignition

(Rev. 2004) *All information subject to change without notice.*
6SE483 0401 Copyright © 2004 DETROIT DIESEL CORPORATION

The two-piece rocker cover is constructed of cast aluminum. The top piece or cap is held in place by eight bolts and is removable for access to the valve, engine brake and fuel injector adjusting mechanisms. A one-piece diamond shaped perimeter seal is located in a groove in the rocker cover base and seals the cap to the base. See Figure 1-107.

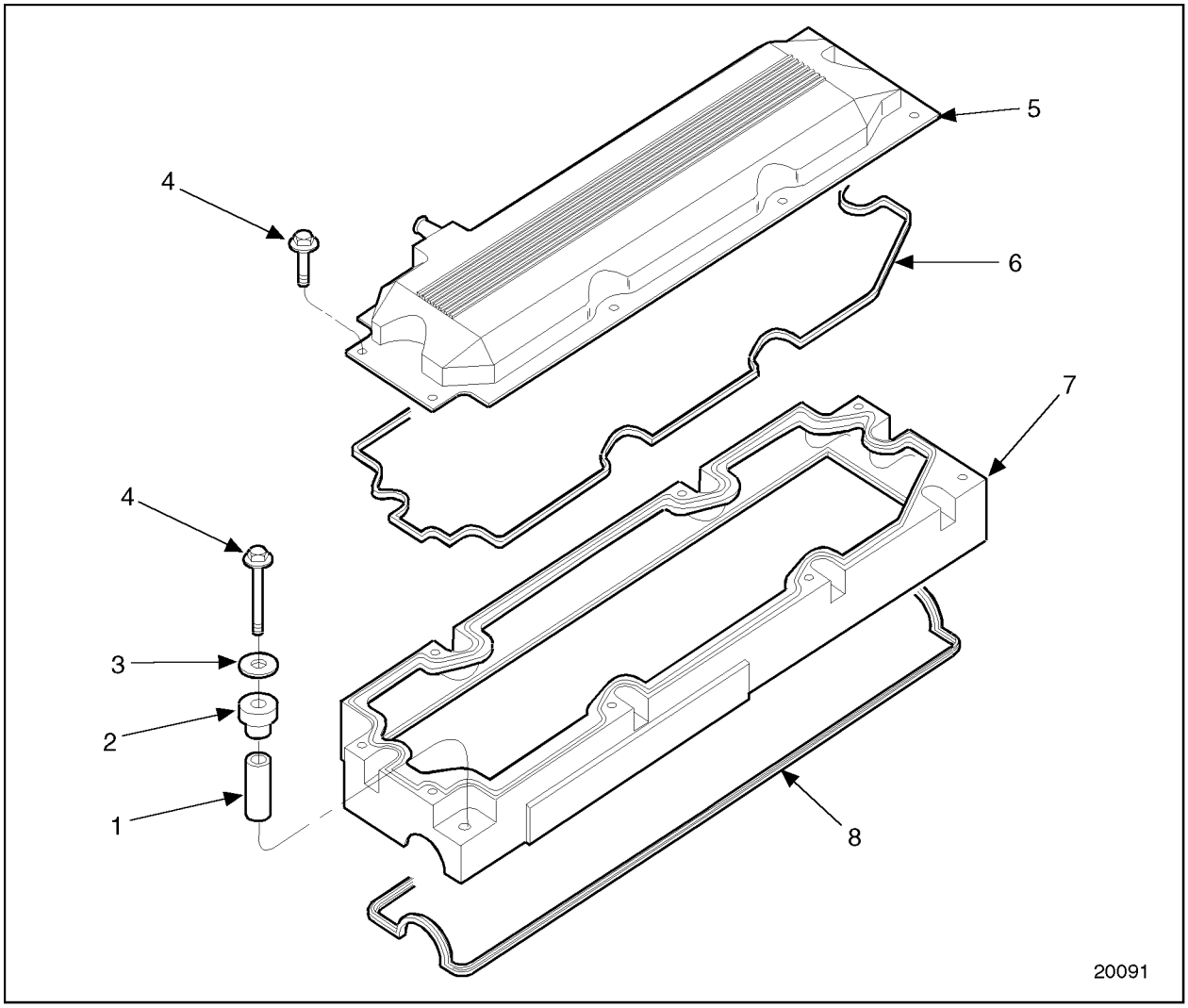

1. Limiting Sleeve
2. Isolator
3. Washer
4. Bolt
5. Rocker Cover Cap
6. Diamond-Shaped Seal
7. Rocker Cover Base
8. Isolator Rim Seal

Figure 1-107 Two-piece Rocker Cover

 Copyright © 2004 DETROIT DIESEL CORPORATION

The three-piece rocker cover is similar to the two-piece cover but with an additional intermediate cover and diamond seal and new cover cap. See Figure 1-108.

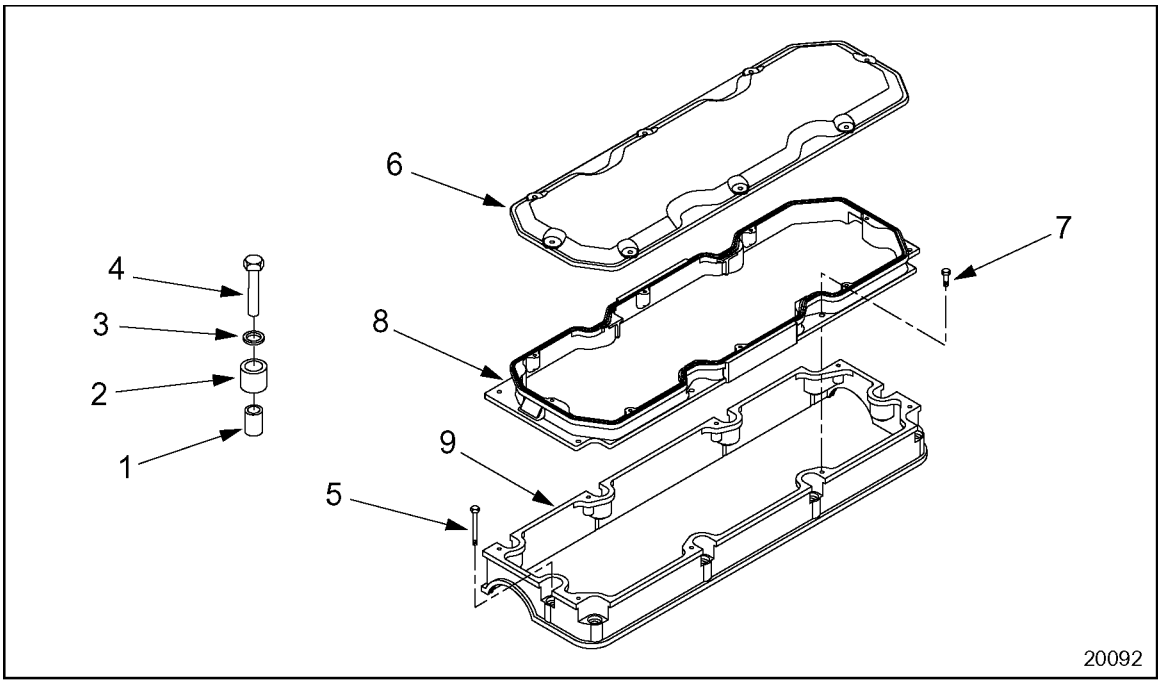

1. Limiting Sleeve
2. Isolator
3. Washer
4. Bolt
5. Bolt
6. Rocker Cover Cap
7. Bolt
8. Intermediate Cover
9. Rocker Cover Base

Figure 1-108 Three-piece Rocker Cover

Two caps are available with the Series 60 diesel engines. One is for use with a Jake Brake®, and one without a Jake Brake®.

Only one cap is available with the Series 60G engines.

The rocker cover base is attached to the cylinder head using ten assemblies consisting of a bolt, limiter sleeve, isolator and flat washer. All rocker covers use a silicone rim seal, seated in a groove around the bottom edge of the rocker cover base to provide an effective oil seal. The one-piece and two-piece design rocker covers incorporate a crankcase ventilation breather outlet. The three-piece design and the Series 60G cap incorporate a combination filler/breather at the camshaft cover (gear case cover) position.

(Rev. 2004) *All information subject to change without notice.*
6SE483 0401 Copyright © 2004 DETROIT DIESEL CORPORATION

1.6.1 Repair or Replacement of Rocker Cover

To determine if repair is possible or replacement is necessary, perform the following procedure. See Figure 1-109.

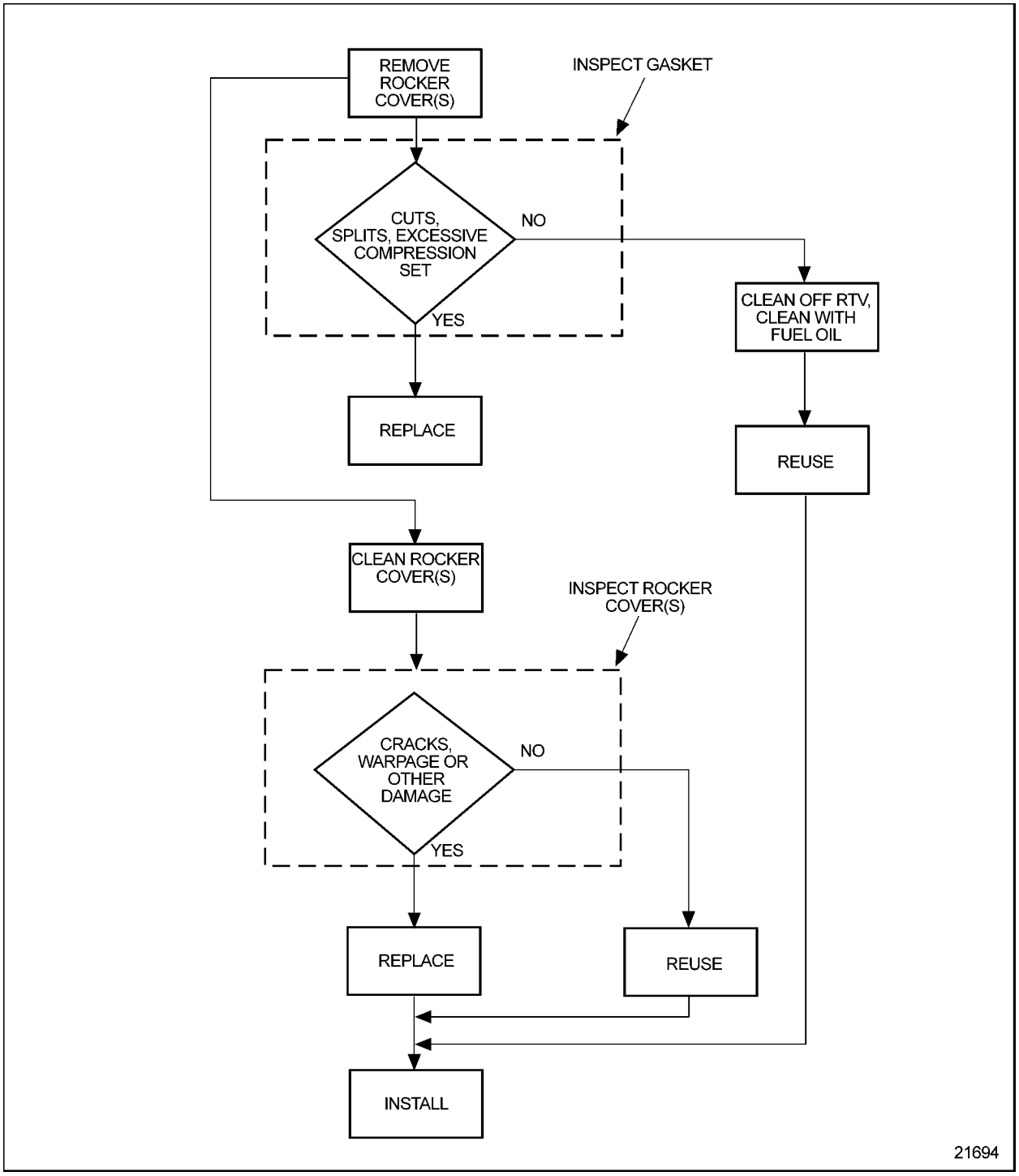

Figure 1-109 Flowchart for Repair or Replacement of Rocker Cover

 Copyright © 2004 DETROIT DIESEL CORPORATION

1.6.2 Removal and Cleaning of One-piece Rocker Cover For Diesel Engines Only

Preclean the rocker cover, especially around its seat on the head, and in the attaching bolt recesses, to keep dirt and debris out of the valve gear chamber.

Perform the following steps to remove the one-piece rocker cover:

1. Remove the center plugs, hold-down bolts, washers and isolators.
2. Lift the rocker cover straight up off the engine.

1.6.2.1 Cleaning and Inspection of the One-piece Rocker Cover For Diesel Engines Only

Inspect the rocker cover as follows:

1. Remove the breather element and retainer clip.

NOTICE:
To avoid damaging the silicone isolators, do not clean them with mineral spirits, fuel oil or any petroleum based solvents.

2. Remove bolt assemblies and isolators and clean in detergent and water solution.
3. Remove gasket from rocker cover and clean the gasket and rocker cover. Remove old RTV sealant from the corners of the gasket and clean the gasket and rocker cover components in clean fuel oil.

NOTE:
Pay special attention to the breather element. Clean thoroughly or replace as required.

⚠ CAUTION:
To avoid injury from flying debris when using compressed air, wear adequate eye protection (face shield or safety goggles) and do not exceed 40 psi (276 kPa) air pressure.

4. Blow dry with compressed air.
5. Clean the breather recess in the rocker cover.
6. Check for damage. Replace as necessary.
7. Reinstall the breather element and retainer clip.

(Rev. 2004) *All information subject to change without notice.*
6SE483 0401 Copyright © 2004 DETROIT DIESEL CORPORATION

1.6.3 Removal and Cleaning of Two-piece Rocker Cover For Diesel Engines Only

Preclean the two piece rocker cover, especially around its seat on the head, and in the attaching bolt recesses, to keep dirt and debris out of the valve gear chamber.

Perform the following steps to remove the two-piece rocker cover:

1. Remove the eight screws that attach the rocker cover cap to the base.
2. Lift the cap off the base.
3. Loosen and remove the ten bolt and isolator assemblies that attach the base to the cylinder head.
4. Lift the base straight up off the cylinder head.

1.6.3.1 Inspection of Two-piece Rocker Cover

Perform the following steps to inspect the two-piece valve rocker cover which has a removable breather housing:

1. Remove the three screws and retainer that retains the breather housing.
2. Remove the breather housing, seal, and wire mesh element.
3. Wash the components in clean fuel oil.

CAUTION:

To avoid injury from flying debris when using compressed air, wear adequate eye protection (face shield or safety goggles) and do not exceed 40 psi (276 kPa) air pressure.

4. Blow dry with compressed air.

 Copyright © 2004 DETROIT DIESEL CORPORATION

5. Reassemble breather housing to valve cover cap. See Figure 1-110. Torque the screws to 2.5 N·m (22 lb·in.).

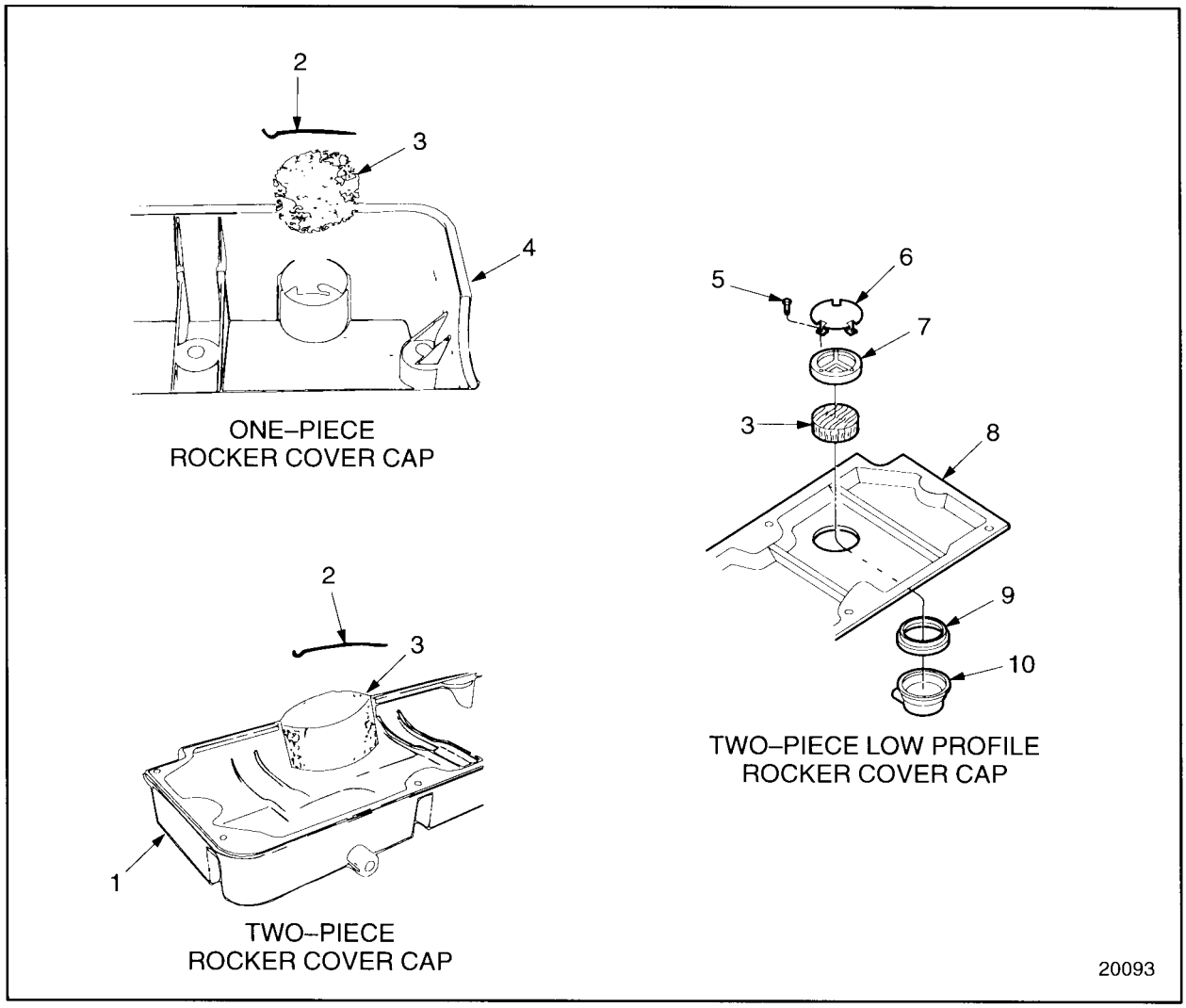

1. Two-Piece Rocker Cover
2. Retainer Clip
3. Wire Mesh Element
4. Screw
5. Retainer Cover
6. Retainer
7. Two-piece Low Profile Rocker Cover Cap
8. Seal
9. Breather Housing

Figure 1-110 Two-piece Rocker Cover Assembly

(Rev. 2004) *All information subject to change without notice.*
6SE483 0401 Copyright © 2004 DETROIT DIESEL CORPORATION

1.6.4 Removal and Precleaning of Two-Piece Rocker Cover-Gas Engines with Coil Over Plug Ignition System Only

Preclean the rocker cover, especially around its base on the cylinder head and in the attaching bolt recesses to keep dirt and debris out of the valve gear chamber.

To remove the two-piece rocker cover:

1. Remove the ignition boots from the spark plug wells. Refer to section 15.3.1.
2. Lift the cap off the base leaving the six extensions tubes in the cylinder head.
3. Blow any excess oil from the outside of the extension tube so that the oil will not enter the spark plug well when the extensions tubes are removed.
4. Pull the six extension tubes from the cylinder head.
5. Loosen and remove the ten bolt/isolator assemblies that attach the base to the cylinder head.
6. Lift the base straight up off the cylinder head.

1.6.5 Removal and Cleaning of Three-piece Rocker Cover

Preclean the three-piece rocker cover, especially around its seat on the head, and in the attaching bolt recesses, to keep dirt and debris out of the valve gear chamber.

Perform the following steps to remove the three-piece rocker cover:

1. Remove the eight screws that attach the rocker cover cap to the intermediate cover. See Figure 1-108.
2. Lift the cap off the intermediate cover.
3. Loosen and remove the eight bolts that attach the intermediate rail to the base.
4. Lift intermediate off the base.
5. Loosen and remove the ten bolt/isolator assemblies that attach the base to the cylinder head.
6. Lift the base straight up off the cylinder head.

 Copyright © 2004 DETROIT DIESEL CORPORATION

Before inspecting the rocker cover, clean the isolators as follows:

NOTICE:

To avoid damaging isolators, do not use solvents of any kind, or any petroleum distillates to clean them. The isolators can be cleaned with mild soap and water if necessary. Install new seals and isolators clean and dry.

1. Wash isolators with mild soap and water.

CAUTION:

To avoid injury from flying debris when using compressed air, wear adequate eye protection (face shield or safety goggles) and do not exceed 40 psi (276 kPa) air pressure.

2. Be sure to completely dry gasket grooves in the rocker cover with compressed air.
3. Use new gaskets (do not reuse old gaskets).

NOTICE:

Reuse gaskets with manufacturing date after May 28, 1999.

4. Inspect the lower rocker cover base-to-cylinder head gasket for damage replace if gasket is damaged.
5. If gasket is not damaged clean off excess RTV, clean gasket with clean fuel oil dry completely and reuse part.

1.6.5.1 Inspection of Three-piece Rocker Cover

Inspect the three-piece valve cover as follows:

1. Wash the components in clean fuel oil.

CAUTION:

To avoid injury from flying debris when using compressed air, wear adequate eye protection (face shield or safety goggles) and do not exceed 40 psi (276 kPa) air pressure.

2. Blow dry with compressed air.
3. Clean the breather recess in the rocker cover.
4. Check for damage. Replace as necessary.

(Rev. 2004) *All information subject to change without notice.*
6SE483 0401 Copyright © 2004 DETROIT DIESEL CORPORATION

1.6.6 Disassembly of Rocker Cover

Disassemble the rocker cover as follows:

1. Disengage the clip that holds the crankcase vent breather element in the valve cover by pressing the center of the spring steel retaining clip outward and removing the straight end.
2. Rotate the clip upward to remove the curved end.
3. Remove the wire mesh element.

1.6.7 Pre-installation of Rocker Cover

Preform the following steps prior to installing the rocker cover:

1. Install the rocker cover seal in corners of the camshaft cap section (arch at each end of the valve cover) first.

NOTE:
Be sure the rocker cover grooves and the seals are clean, free of oil and dry.

2. Install the cam cap section, starting in the center, by pushing the seal into the groove at the top of the arch. Then install each section at its halfway point. Seat the seal completely around the arch. Be sure the corners are still firmly seated after the arch is completed. They should present a square corner parallel to the rocker cover rail. Repeat this procedure for the cam cap section on the other end. See Figure 1-111.

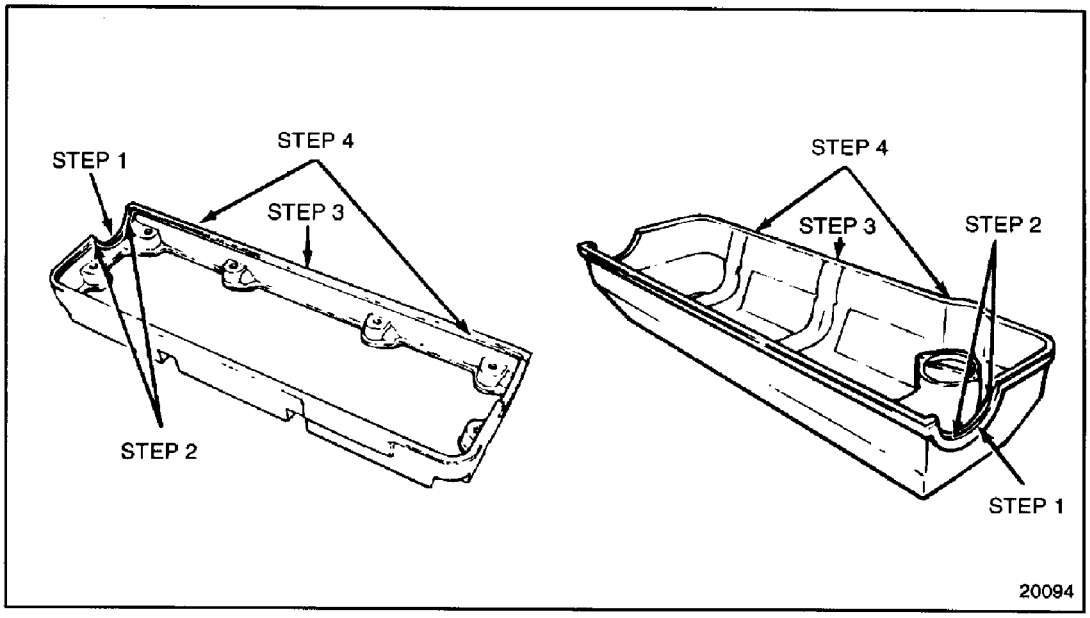

Figure 1-111 Rocker Cover Gasket Installation

 Copyright © 2004 DETROIT DIESEL CORPORATION

3. Install the long runs of the gasket starting in the center, by pushing the seal into the groove.
4. Then install the rail portion at each halfway point. Repeat this procedure for the other rail portion. Make sure the seal is completely seated all the way around the valve cover.

NOTE:
The corners must be cleaned prior to RTV installation for best results.

5. Apply a small 4.75 mm (3/16 in.) fillet of RTV in the corners formed by the rear camshaft cap and the head, where the cover seal contacts. Repeat this procedure for the corners formed by the front camshaft cap and the head. See Figure 1-112.

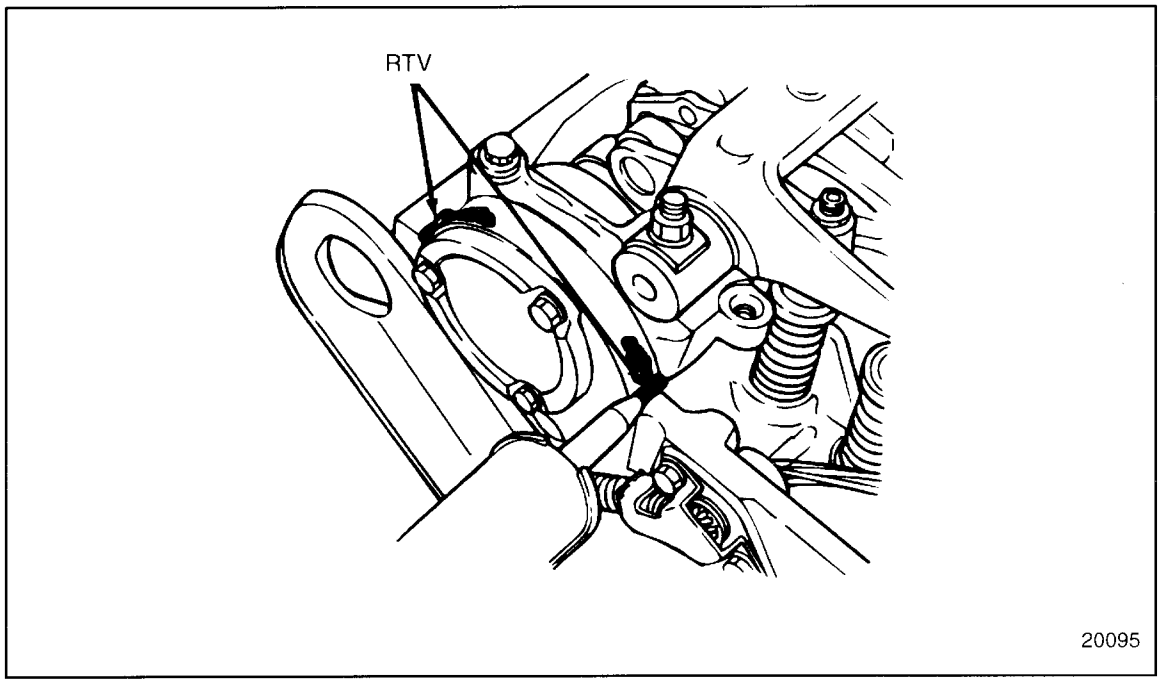

Figure 1-112 RTV Installation

(Rev. 2004) *All information subject to change without notice.*
6SE483 0401 Copyright © 2004 DETROIT DIESEL CORPORATION

1.6.8 Installation of One-Piece Rocker Cover

Perform the following steps to install a one-piece rocker cover:

1. Position the rocker cover on the cylinder head.
2. Install the two bolts, with isolators and washers installed, into their recesses in the one-piece rocker cover.
3. Torque the two bolts, starting with the center bolts and working out, to 20-25 N·m (15-18 lb·ft).
4. Press the two protective plugs into the two center holes until they are firmly seated.
5. Install any other components that were removed for their procedure.

CAUTION:

Diesel engine exhaust and some of its constituents are known to the State of California to cause cancer, birth defects, and other reproductive harm.

- ☐ **Always start and operate an engine in a well ventilated area.**
- ☐ **If operating an engine in an enclosed area, vent the exhaust to the outside.**
- ☐ **Do not modify or tamper with the exhaust system or emission control system.**

6. Start the engine and check for leaks.

 Copyright © 2004 DETROIT DIESEL CORPORATION

1.6.9 Installation of Two-Piece and Three-Piece Rocker Covers

Perform the following steps to install a two or three-piece rocker cover:

1. Position the rocker cover base on the cylinder head.
2. Lubricate the valve cover limiting sleeves with clean silicone spray. Insert the sleeves into the isolators until the end of the sleeve is flush with the isolator. See Figure 1-113.

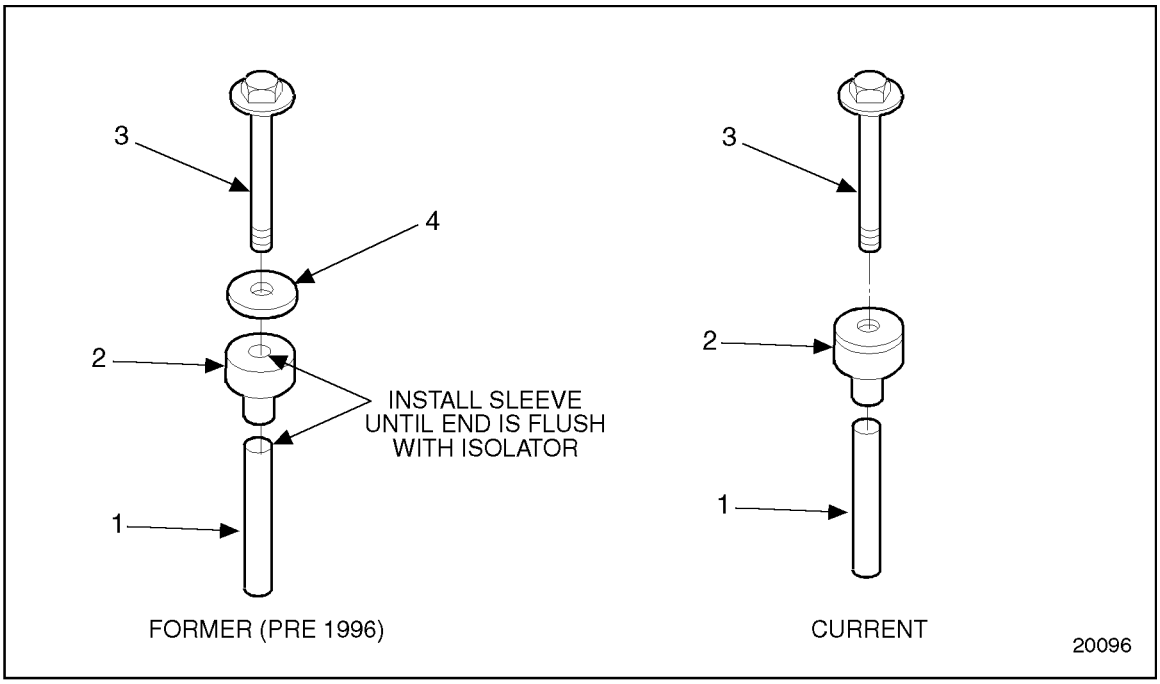

1. Limiting Sleeve
2. Isolator
3. Bolt
4. Flat Washer

Figure 1-113 Rocker Cover Base Hold Down Hardware

(Rev. 2004) *All information subject to change without notice.*
6SE483 0401 Copyright © 2004 DETROIT DIESEL CORPORATION

3. Install the hold-down bolts, with washers installed, to the limiting sleeves.
4. Install the hold-down assemblies to the rocker cover base, and thread the bolts two to three threads into the cylinder head.

NOTE:
Use care when tightening the rocker cover base hold-down bolts that the injector wires do not get caught between the limiting sleeve and the cylinder head. See Figure 1-114.

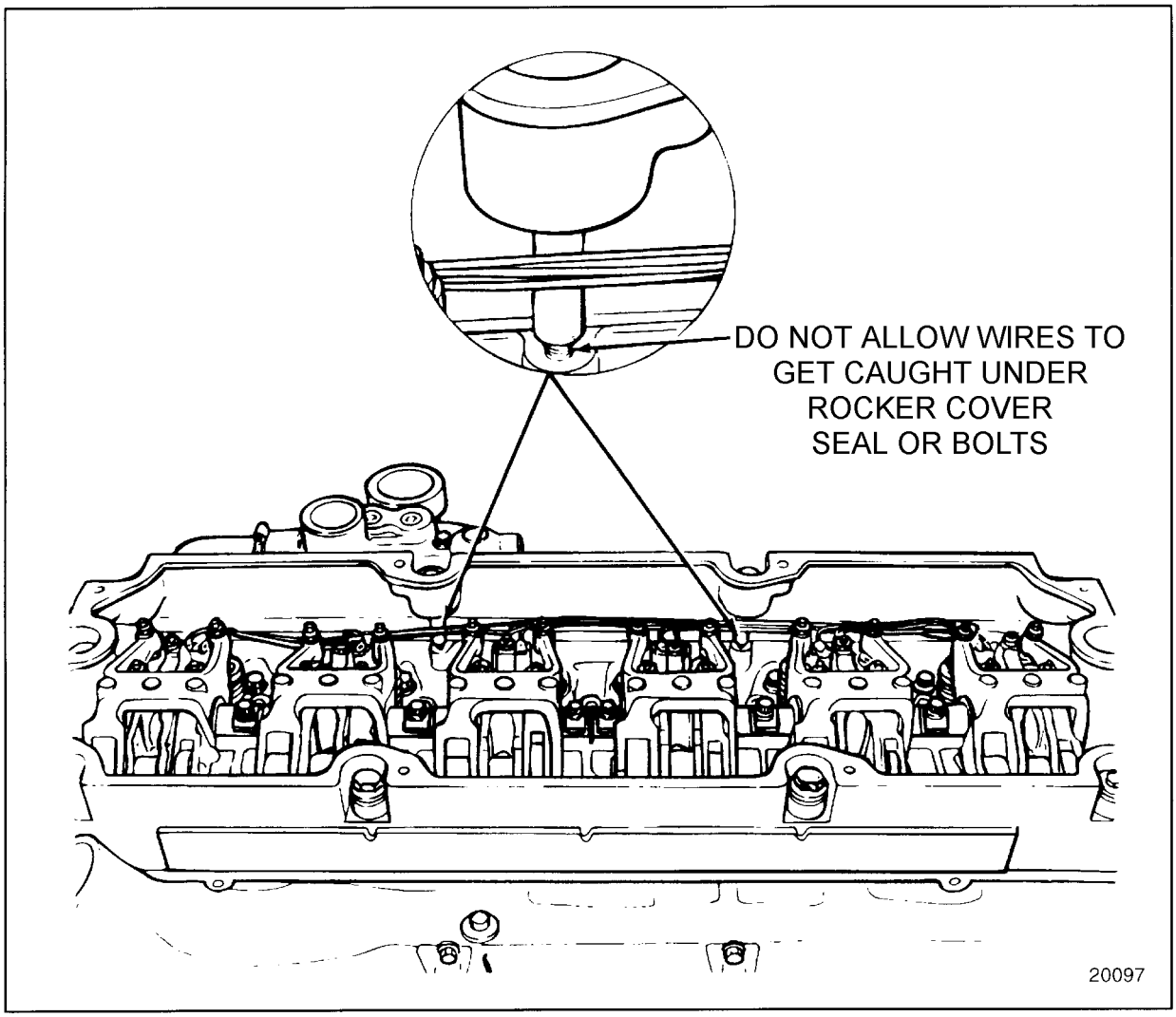

Figure 1-114 Rocker Cover Base Hold-down Bolt Installation

 Copyright © 2004 DETROIT DIESEL CORPORATION

5. Torque the ten rocker cover base hold-down bolts to 30-38 N·m (22-28 lb·ft). See Figure 1-115.

NOTE:
Torque the bolts in two stages, using half-torque values first.

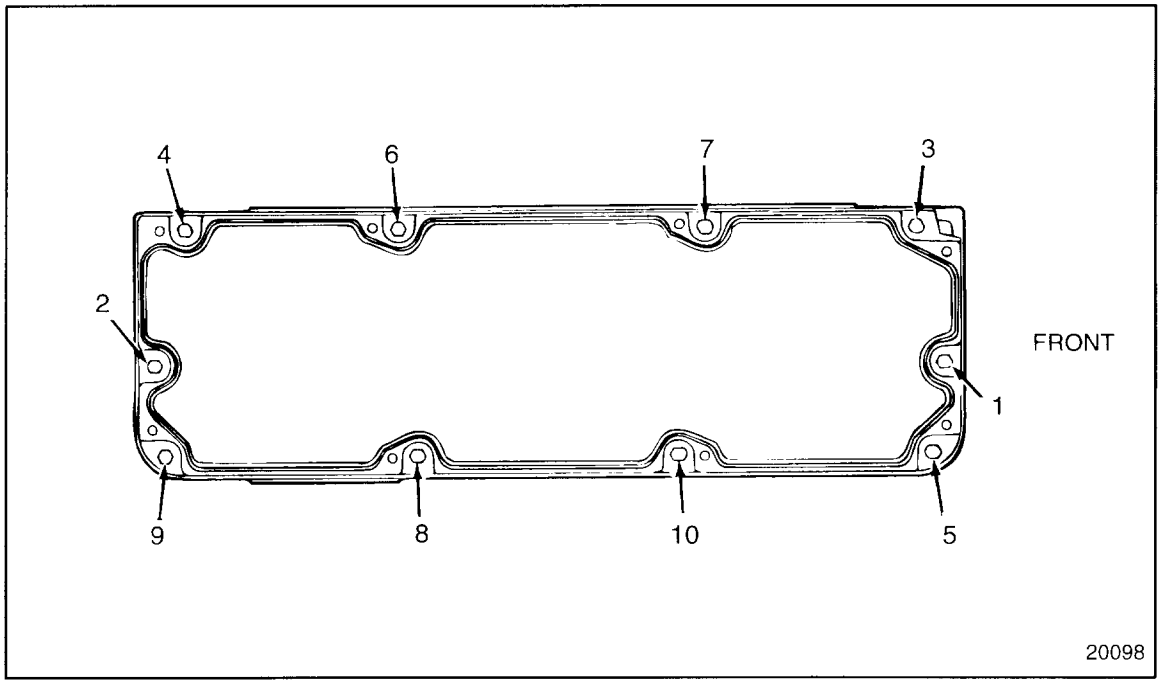

Figure 1-115 Rocker Cover Base Bolt Tightening Sequence

6. Be sure the groove in the top of the rocker cover base, and its mating, diamond-shaped seal are clean and dry. Install the diamond-shaped seal to the groove by pressing the seal into the groove. Use care not to stretch or twist the seal. The seal has a definite shape, and should be installed exactly as removed from the base. If the seal cannot be installed to its groove without bunching or looping, the seal is stretched and must be replaced. The same procedure applies to the intermediate cover diamond seal installation.

(Rev. 2004) *All information subject to change without notice.*
6SE483 0401 Copyright © 2004 DETROIT DIESEL CORPORATION

7. Install the rocker cover cap to the base. Install the eight screws that attach the cap to the base, and torque to 22-25 N·m (16-18 lb·ft) using the torque sequence. See Figure 1-116. Tighten the bolts in two stages, using half-torque value first. The same procedure applies to the intermediate cover installation.

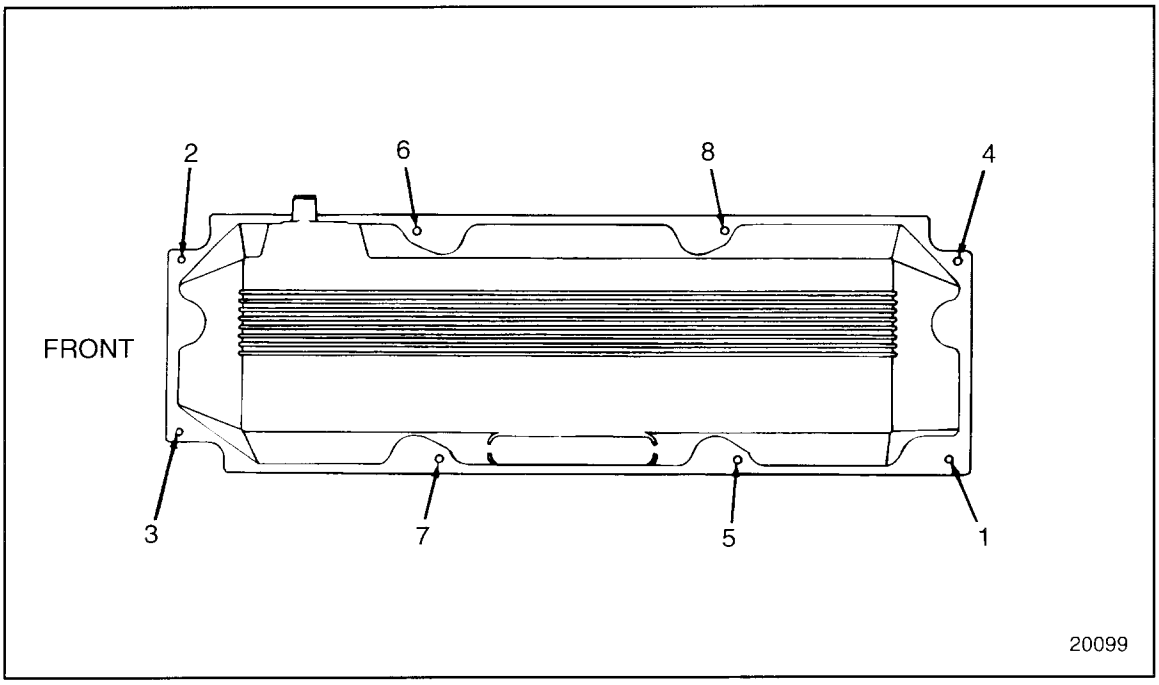

Figure 1-116 Rocker Cover Bolt Tightening Sequence

8. Install any other parts that were removed for this procedure.
9. Refer to section 1.6.8 for the exhaust caution before preceeding. Start the engine and check for leaks. Shutdown engine after checking for leaks.

 Copyright © 2004 DETROIT DIESEL CORPORATION

1.6.10 Installation of the Two-Piece Rocker Cover Cap - Diesel Engines Only

Install the two-piece rocker cover as follows:

1. Be sure the groove in the bottom of the rocker cover base, and its mating, diamond-shaped seal are clean and dry. Install the diamond-shaped seal to the groove by pressing the seal into the groove. Use care not to stretch or twist the seal. The seal has a definite shape, and should be installed exactly as removed from the base. If the seal cannot be installed to its groove without bunching or looping, the seal is stretched and must be replaced. The same procedure applies to the intermediate cover diamond seal installation.
2. Install the rocker cover cap to the base. Install the eight bolts that attach the cap to the base, and torque to 22-25 N·m (16-18 lb·ft) using the torque sequence. See Figure 1-117. Tighten the bolts in two stages, using half-torque value first. The same procedure applies to the intermediate cover installation.

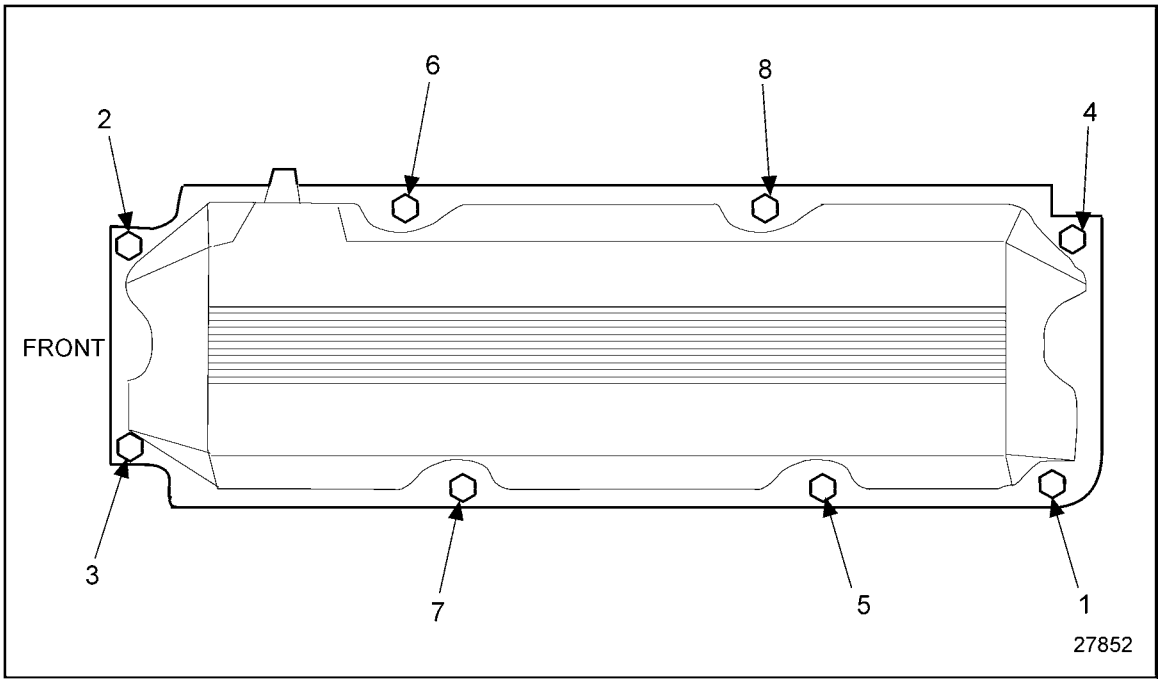

Figure 1-117 Rocker Cover Bolt Cap Tightening Sequence

3. Install any other parts that were removed for this procedure.
4. Refer to section 1.6.8 for the exhaust caution before preceeding. Start the engine and check for leaks. Refer to section 11.8.

(Rev. 2004) *All information subject to change without notice.*
6SE483 0401 Copyright © 2004 DETROIT DIESEL CORPORATION

1.6.11 Installation of the Two-Piece Rocker Cover Cap (Gas Engines with Coil Over Plug Ignition System Only)

Install the two-piece rocker cover cap as follows:

1. Clean any oil or dirt from the spark plug wells.
2. Insert the six extension tubes with O-rings in the cylinder head.
3. Orient the extension tubes so that twelve threaded holes are in a straight line. This will allow the coil mounting bolts to engage these holes after the rocker cover cap is installed.
4. Place the rocker cover cap on base without disturbing the extension tube seals. Loosely install the eight bolts that attach the cap to the base.
5. Insert the coils into the spark plug wells. Engage the coil mounting bolts into the extension tubes. Torque the bolts 13-16 N·m (10-12 lb·ft).
6. Torque the eight rocker cover cap mounting bolts to 22-25 N·m (16-18 lb·ft).
7. Install the remaining ignition system parts. Refer to section 15.2.
8. Apply antiseize compound to the coil cover mounting screw holes to aid removal of these parts in the future.
9. Install any other parts that were removed for this procedure.
10. Refer to section 1.6.8 for the exhaust caution before preceeding. Start the engine and check for leaks. Refer to section 11.8.

 Copyright © 2004 DETROIT DIESEL CORPORATION

1.7 CRANKSHAFT

The crankshaft is a one-piece forging of chrome-alloy steel, heat-treated to ensure strength and durability. See Figure 1-118.

NOTE:
The natural gas crankshaft has machined counter weights to allow for shorter rods.

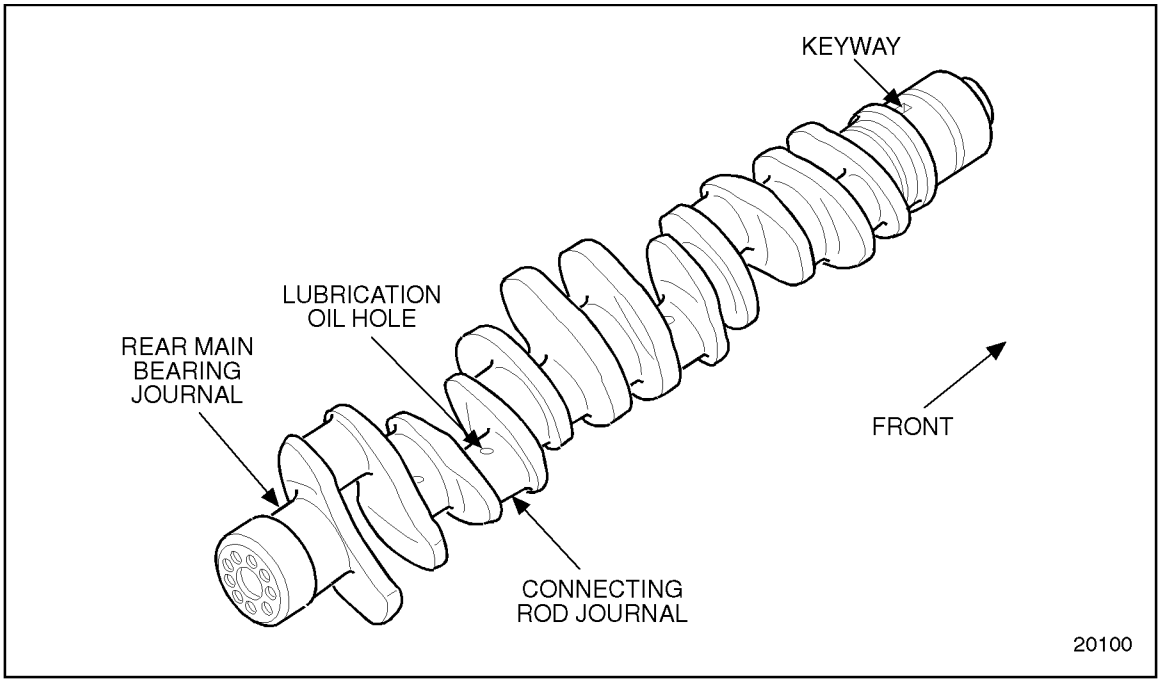

Figure 1-118 Crankshaft

The main and connecting rod bearing journal surfaces and fillets are induction hardened.

Complete static and dynamic balance of the crankshaft has been achieved by counterweights incorporated in the crankshaft.

Current crankshafts may have a six-bolt or twelve-bolt mounting pattern on the front.

NOTICE:
Do not install iron cylinder kits into engines with "lightweight" crankshafts. The piston pin bolts will hit crankshaft counterweights preventing engine from turning over and possibly causing engine damage.

NOTE:
Effective May 2001, a new “lightweight” crankshaft is used on 12.7L engines using steel pistons. (The iron piston pin bolts interefere with the new lightweight crankshaft design.) See Figure 1-119 and see Figure 1-120.

(Rev. 2004) *All information subject to change without notice.*
6SE483 0401 Copyright © 2004 DETROIT DIESEL CORPORATION

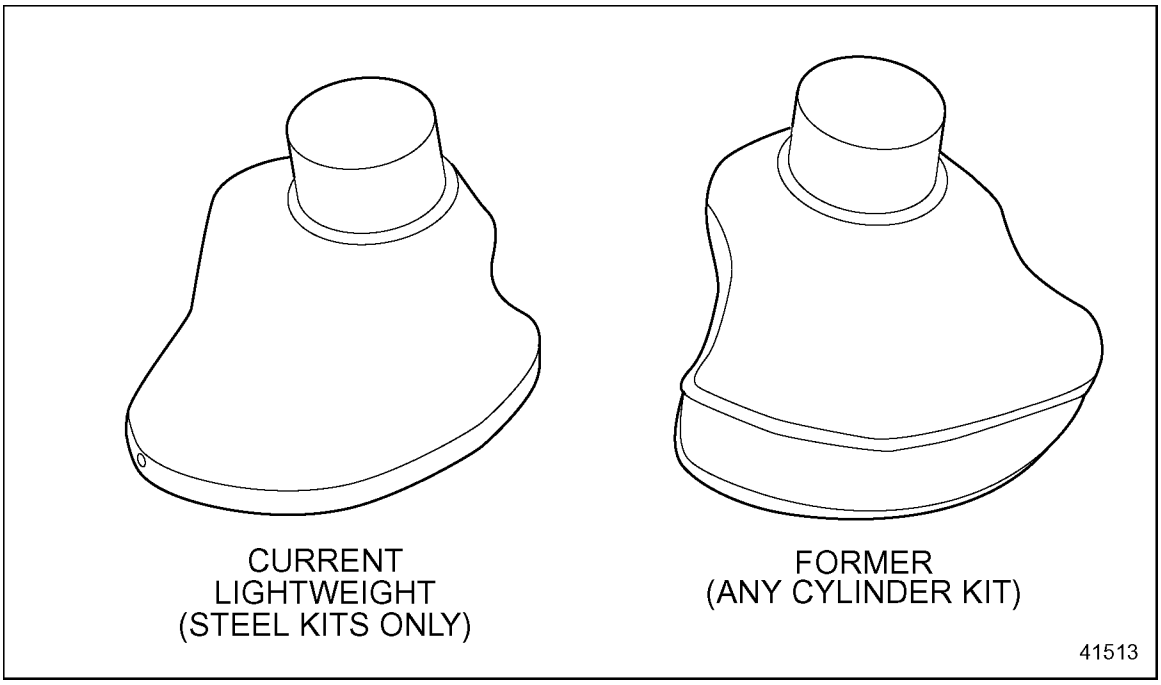

Figure 1-119 Current and Former Crankshafts

 Copyright © 2004 DETROIT DIESEL CORPORATION

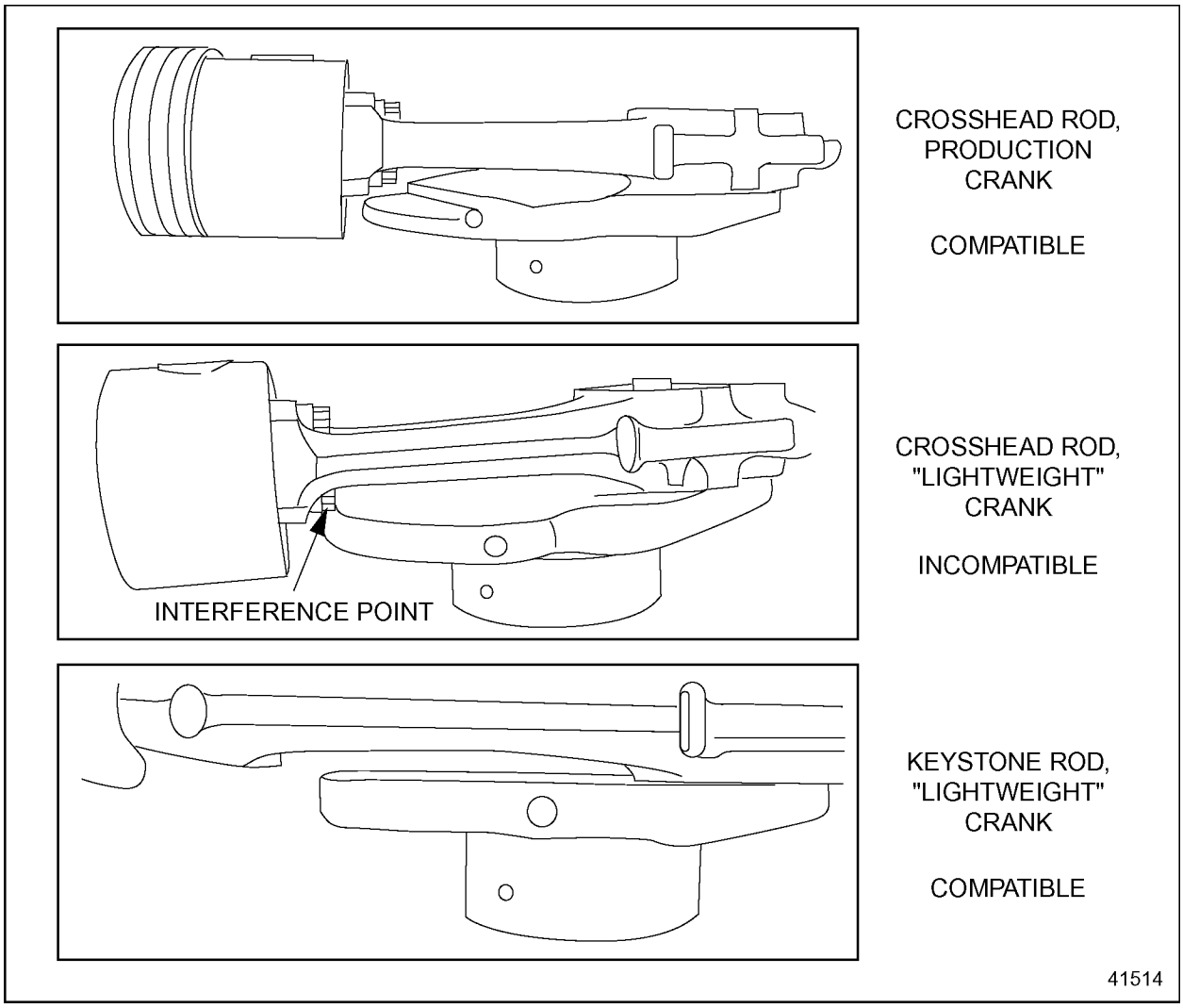

Figure 1-120 Varied Piston Dome-Crankshaft Clearances

(Rev. 2004) *All information subject to change without notice.*
6SE483 0401 Copyright © 2004 DETROIT DIESEL CORPORATION

The crankshaft end play is controlled by thrust washers located at the No. 6 main bearing cap and saddle of the engine. See Figure 1-121.

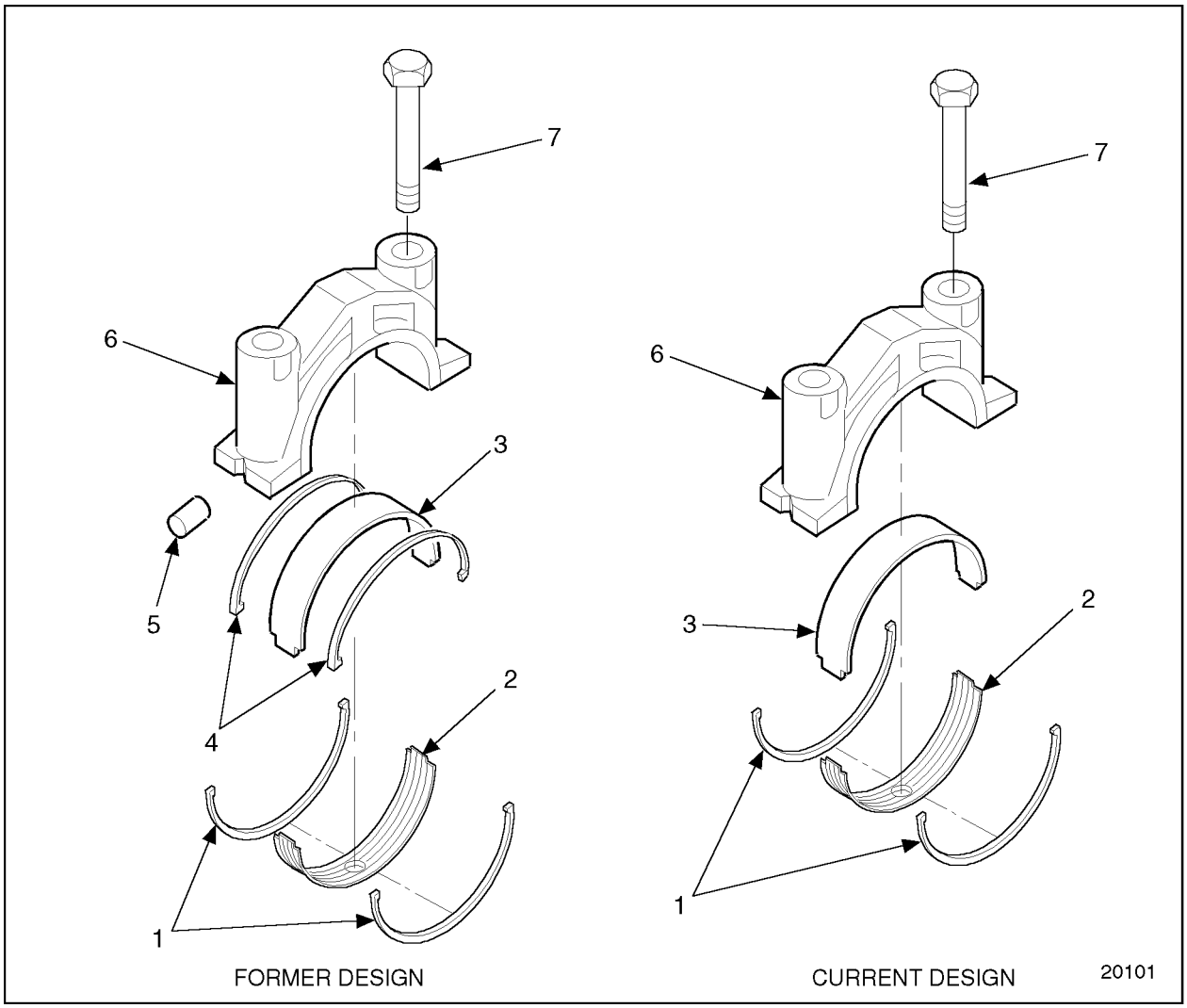

1. Upper Thrust Washer (2)
2. Upper No. 6 Bearing Shell
3. Lower Bearing Shell (No. 1 through 7)
4. Lower Thrust Washer (former design only)
5. Dowel
6. No. 6 Main Bearing Cap
7. Main Bearing Cap Bolt

Figure 1-121 Crankshaft Thrust Bearing Detail

The current design makes use of thrust washers in the upper positions only.

Oversize thrust washers are available to correct for excessive end play.

 Copyright © 2004 DETROIT DIESEL CORPORATION

On some engines, the No. 6 main bearing cap is indexed to the cylinder block by two slots in the cap which register with dowels in the cylinder block. See Figure 1-122.

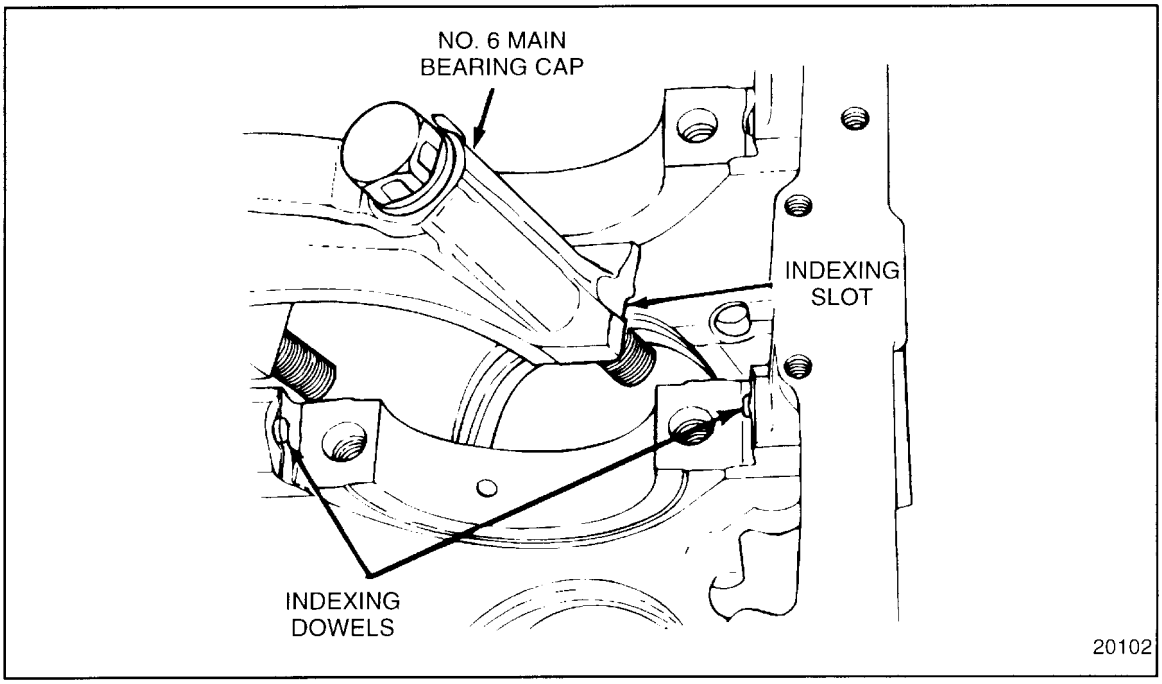

Figure 1-122 Former No. 6 Main Bearing Cap

The current design does not use the indexing dowels. See Figure 1-123.

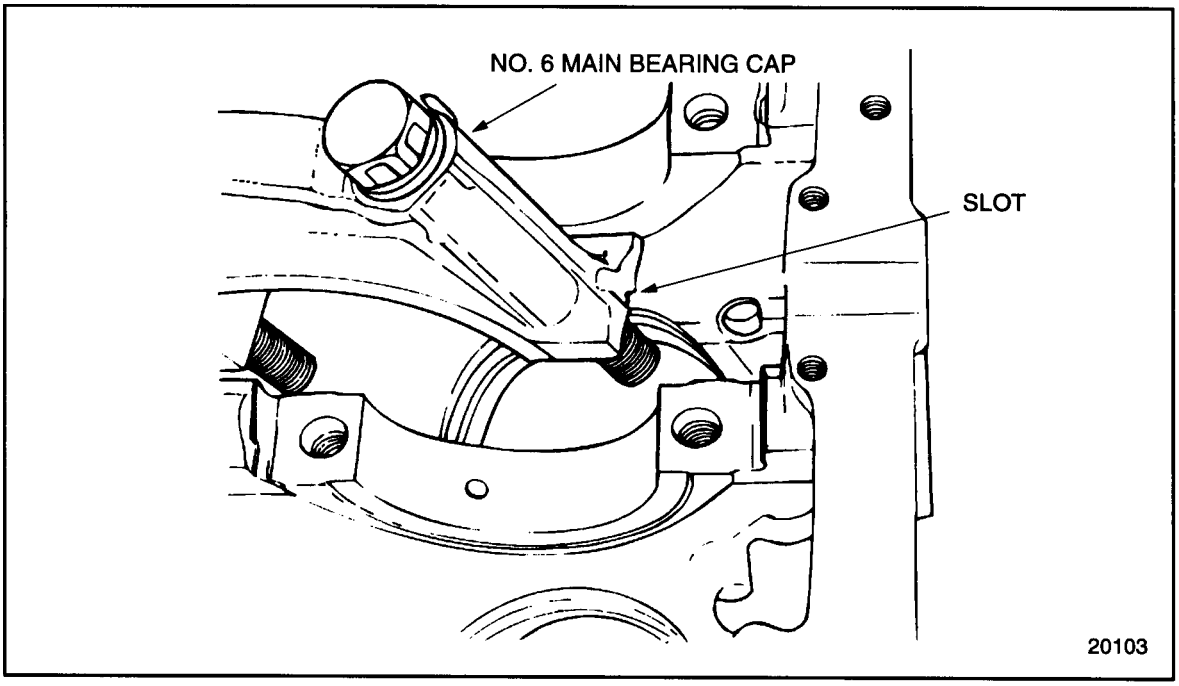

Figure 1-123 Current No. 6 Main Bearing Cap

(Rev. 2004) *All information subject to change without notice.*
6SE483 0401 Copyright © 2004 DETROIT DIESEL CORPORATION

Full pressure lubrication to all connecting rod and main bearings is provided by drilled passages within the crankshaft and cylinder block. See Figure 1-124.

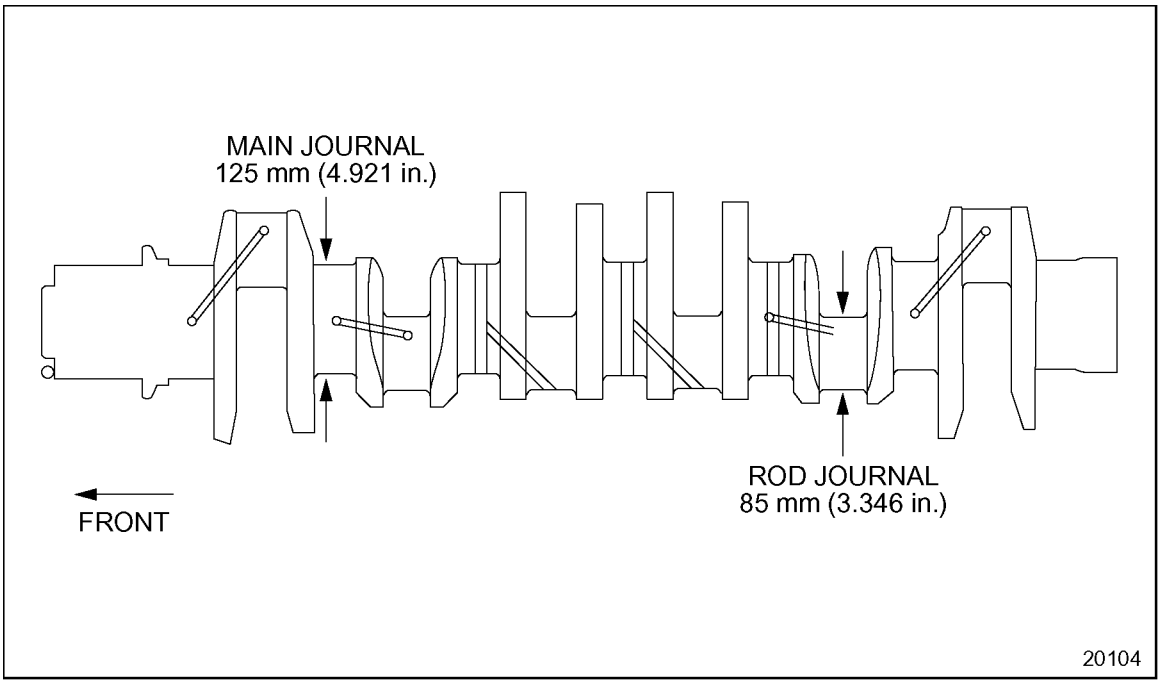

Figure 1-124 Crankshaft Lubricating Oil Holes

Six or twelve tapped holes, equally spaced, are provided on the rear butt for attaching the flywheel. There are six or twelve equally spaced tapped holes on the front butt of the crankshaft for attaching the crankshaft pulley and vibration damper. No locating dowels are provided at either end.

Each standard main bearing journal is 125.000-124.968 mm (4.921-4.920 in.) in diameter and each standard connecting rod journal is 85.000-84.975 mm (3.346-3.345 in.) in diameter.

 Copyright © 2004 DETROIT DIESEL CORPORATION

New crankshafts with smaller radii fillets (listed in Table 1-2) replaced the former crankshafts, effective with the following engine serial numbers:

Engine Model	Engine Serial Number
6067WK60 (11.1 L)	6R184522
6067GK60 (12.7 L)	6R188251

Table 1-2 New Crankshafts with Smaller Radii Fillets

This change was made to permit installation of new, wider connecting rod bearings that increase rod bearing oil film thickness and reduce bearing pressures. The fillets on the new crankshafts have a radius of 4.0-3.5 mm (0.157 -0.138 in.). The fillets on the former crankshafts had a radius of 6.0-5.5 mm (0.236 -0.216 in.). To conform with this change, new connecting rods with smaller rod chamfers were also released. Refer to section 1.20for information on the new connecting rods and bearings.

The new crankshafts, bearings, and connecting rods must be used together to ensure interchangeability. Former parts cannot be mixed with new parts in the same engine. The former crankshafts will no longer be available.

(Rev. 2004) *All information subject to change without notice.*
6SE483 0401 Copyright © 2004 DETROIT DIESEL CORPORATION

1.7.1 Repair or Replacement of Crankshaft

To determine if repair is possible or replacement is necessary, perform the following procedure. See Figure 1-125.

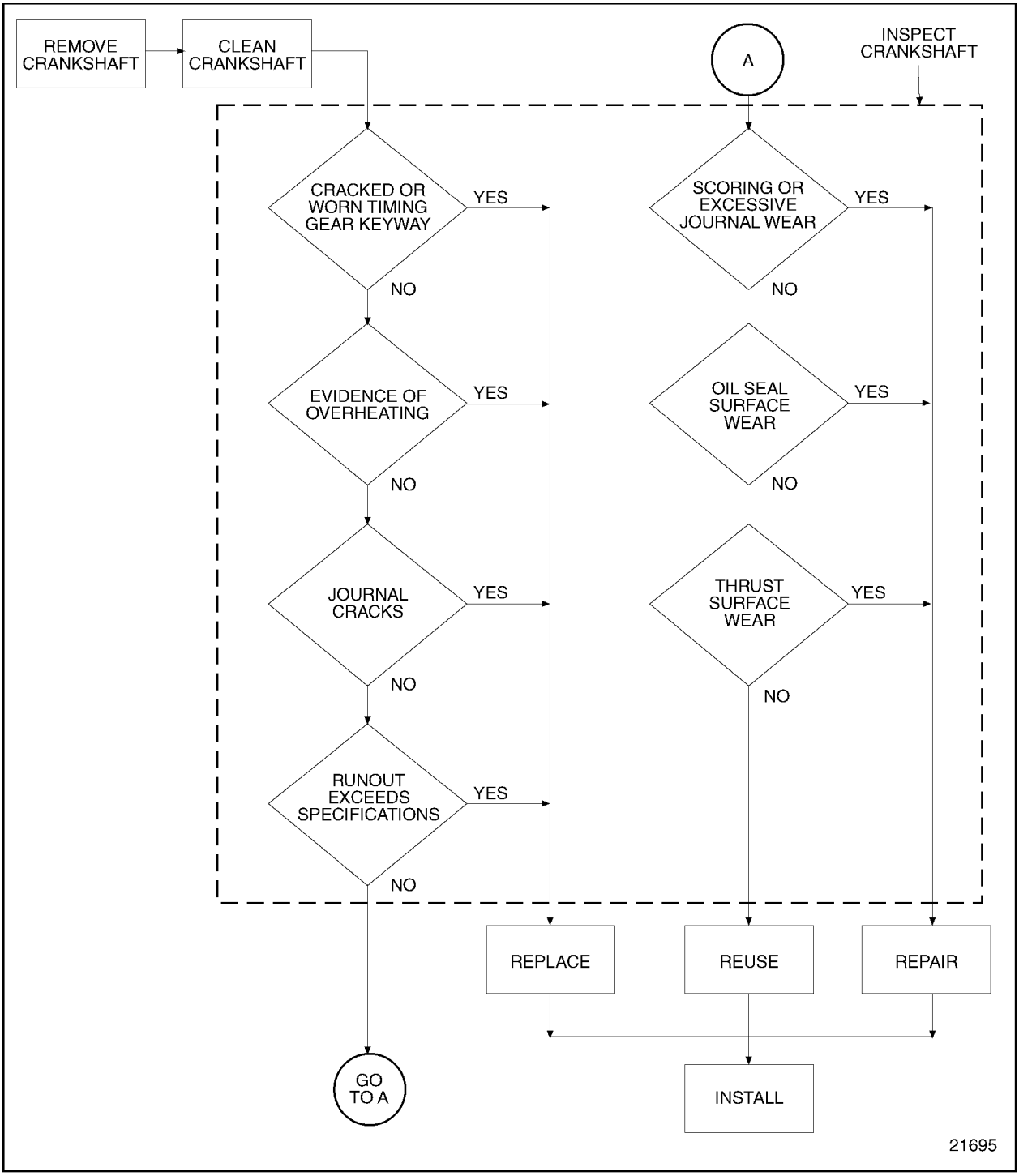

Figure 1-125 Flowchart for Repair or Replacement of Crankshaft

 Copyright © 2004 DETROIT DIESEL CORPORATION

1.7.2 Removal and Cleaning of Crankshaft

When removal of the crankshaft becomes necessary, first remove the transmission, then proceed as follows:

1. Steam clean the exterior of the engine. Refer to section 1.1.3.
2. Drain the cooling system. Refer to section 13.13.4.
3. Drain the lubricating oil. Refer to section 13.13.1.
4. Attach suitable chain hoist and spreader bar with hooks to the three lifter brackets (one at the front and two at the rear). Remove all engine to base attaching bolts and remove the engine from its base. Refer to section 1.1.2. See Figure 1-5.

CAUTION:

To avoid injury from a falling engine, ensure the engine is securely attached to the engine overhaul stand before releasing the lifting sling.

5. Remove and inspect all of the accessories and assemblies with their attaching parts as necessary to permit the engine block adaptor, to be bolted to the intake (left) side of the cylinder block. Mount the engine to the overhaul stand, J 29109 with adaptor, J 35635-A attached. Refer to section 1.1.2.
6. Remove the oil pan, refer to section 3.11.2.
7. Inspect the oil pan, refer to section 3.11.3.1.
8. Remove the lubricating oil pump, refer to section 3.2.2.
9. Inspect the lubricating oil pump, refer to section 3.2.3.1.
10. Remove the flywheel, refer to section 1.14.2.
11. Inspect the flywheel, refer to section 1.14.2.1.
12. Remove flywheel housing, refer to section 1.16.2.
13. Inspect the flywheel housing, refer to section 1.16.2.1.

NOTICE:

Use care when removing the crankshaft pulley as the vibration damper may come off. If the damper is allowed to fall, damage to the internal components of the damper may result.

14. Loosen and remove two of the crankshaft pulley retaining bolts and hardened washers 180 degrees apart and install two flywheel guide studs, J 36235, in their place. Then loosen and remove the remaining four pulley retaining bolts and hardened washers. Refer to section 1.13.2.

(Rev. 2004) *All information subject to change without notice.*
6SE483 0401 Copyright © 2004 DETROIT DIESEL CORPORATION

15. Remove and inspect the viscous vibration damper. Refer to section 1.12.2, and refer to section 1.12.2.1, for inspection.
16. Remove and inspect the engine front support and gear case cover. Refer to section 1.10.2, for removal and refer to section 1.10.2.1, for inspection.
17. Remove the cylinder head, refer to section 1.2.2.
18. Inspect the cylinder head, refer to section 1.2.3.1.
19. Loosen and remove the main bearing cap bolts. Remove the main bearing caps for inspection. Refer to section 1.9.2.

NOTE:
The connecting rod caps must be reinstalled to their respective connecting rods. The main bearing caps should be kept in sequence, so that they may be installed to their original positions.

20. Remove and inspect the piston and connecting rod assemblies. Refer to section 1.19.2 for removal and refer to section 1.19.3.1.
21. Remove and inspect the thrust washers from each side of the No. 6 main bearing cap, if they exist. (Engines with a serial number greater than 6R-6287 do not have thrust washers on the No. 6 main bearing cap.) Refer to section 1.9.2.2 for inspection.
22. Remove and inspect the crankshaft, including the crankshaft gear and timing wheel. Refer to section 1.7.2and refer to section 1.7.2.1.
23. Remove the timing gear and timing wheel, refer to section 1.22.2and inspect it, refer to section 1.22.3.
24. Remove the Woodruff key from the slot in the front crankshaft hub.

1.7.2.1 Inspection of Crankshaft

Perform the following steps for crankshaft inspection:

CAUTION:

To avoid injury from flying debris when using compressed air, wear adequate eye protection (face shield or safety goggles) and do not exceed 40 psi (276 kPa) air pressure.

1. Clean out the oil passages thoroughly with a stiff wire brush. Clean the crankshaft with fuel oil and dry it with compressed air.
2. Inspect the crankshaft timing gear keyway for evidence of cracks or wear. Replace the crankshaft if these conditions are evident.
3. If the crankshaft shows evidence of excessive overheating, replace the crankshaft since the heat treatment has probably been destroyed.

 Copyright © 2004 DETROIT DIESEL CORPORATION

4. Check the crankshaft journal surfaces for score marks and other imperfections. If excessively scored, the journal surfaces must be reground. Refer to section ADDITIONAL INFORMATION 1.A, "Main and Connecting Rod Journals".
5. Carefully, inspect the front and rear end of the crankshaft in the area of the oil seal contact surface for evidence of a rough or grooved condition. Any imperfections of the oil seal contact surfaces will result in oil leakage at these points.
6. If the crankshaft oil seal contact surfaces are grooved, the seal surfaces must be sleeved and an oversized seal used. Refer to section 1.8.2.
7. Check the crankshaft thrust surfaces for excessive wear or grooving. If excessively worn, the thrust surfaces must be reground. Refer to section ADDITIONAL INFORMATION1.A, "Machining Operations".
8. Check the crankshaft timing gear for worn or chipped teeth. Inspect the timing wheel for bent or otherwise damaged teeth. Replace as necessary. Refer to section 1.28.2.1.
9. Check the crankshaft journal run-out. Refer to section 1.7.2.4.
10. Check the journal alignment. Refer to section 1.7.2.3.
11. Check the journal measurements. Refer to section 1.7.2.4.
12. Inspect the crankshaft for cracks. Refer to section 1.7.2.1.

1.7.2.2 Crankshaft Journal Run-out Measurements

Support the crankshaft on its front and rear journals on V-blocks or the inverted engine block with only the front and rear upper bearing shells in place. Check the intermediate main journals with a dial indicator for run-out when the crankshaft is rotated.

When checking the crankshaft bow, if the run-out is greater than that listed in Table 1-3, the crankshaft must be replaced.

Journals Supported On	Journals Measured	Maximum Run-out (Total Indicator Reading)
No. 1 and No. 7	No. 2 and No. 6	0.076 mm (0.003 in.)
No. 1 and No. 7	No. 3 and No. 5	0.127 mm (0.005 in.)
No. 1 and No. 7	No. 4	0.152 mm (0.006 in.)

Table 1-3 Crankshaft Bow

(Rev. 2004) *All information subject to change without notice.*
6SE483 0401 Copyright © 2004 DETROIT DIESEL CORPORATION

1.7.2.3 Adjacent Journal Alignment

When run-out on the adjacent journals is in opposite directions, the sum must not exceed 0.076 mm (0.003 in.) total indicator reading. When the high spots of run-out on the adjacent journals are in the same direction, the difference must not exceed 0.076 mm (0.003 in.) total indicator reading.

1.7.2.4 Journal Diameter Measurements

Measure all of the main and connecting rod bearing journal diameters. See Figure 1-126.

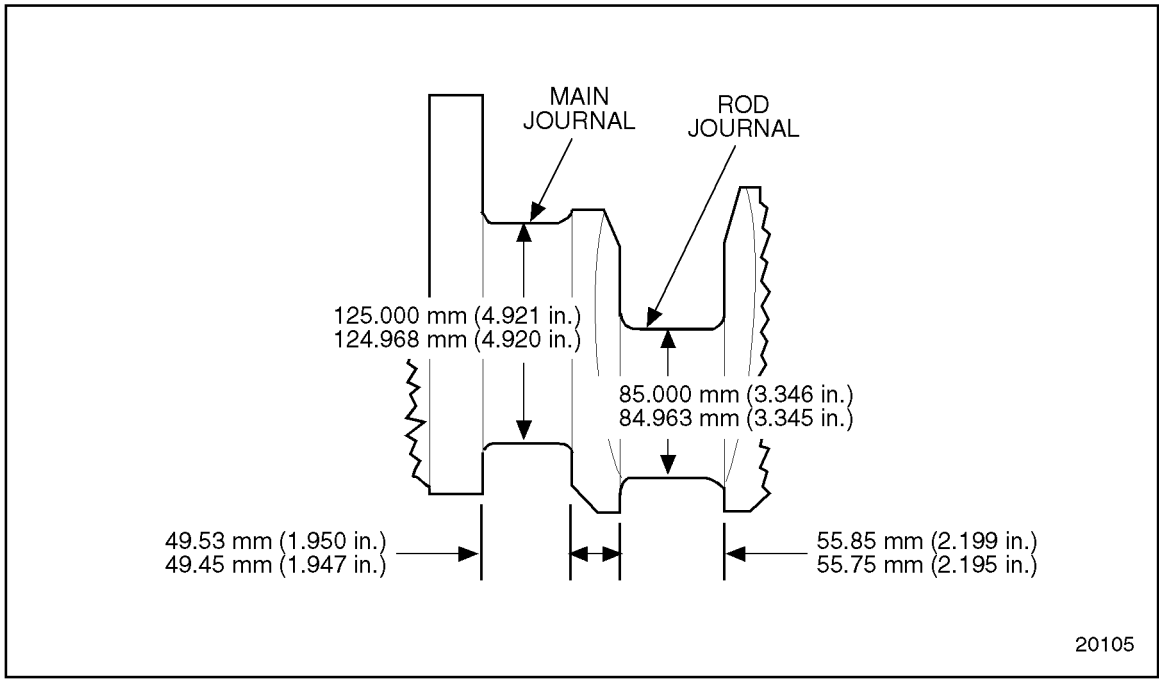

Figure 1-126 Dimensions of Crankshaft Journals

Measure the journals at several places on the circumference so that taper, out-of-round and bearing clearances can be determined. If the crankshaft is worn so that the maximum connecting rod or main bearing journal-to-bearing shell clearance (with new shells) exceeds 0.1270 mm (0.005 in.) (connecting rod journals) or 0.1422 mm (0.0056 in.) (main bearing journals), the crankshaft must be reground. Measurements of the crankshaft should be accurate to the nearest 0.0025 mm (0.0001 in.). Also, if the main bearing journal taper of a used crankshaft exceeds 0.0381 mm (0.0015 in.) or the out-of-round is greater than 0.0254 mm (0.001 in.) the crankshaft must be reground. Specifications for the crankshaft are listed in Table 1-23.

 Copyright © 2004 DETROIT DIESEL CORPORATION

Also, measure the distance between crankshaft thrust washer surfaces. See Figure 1-127.

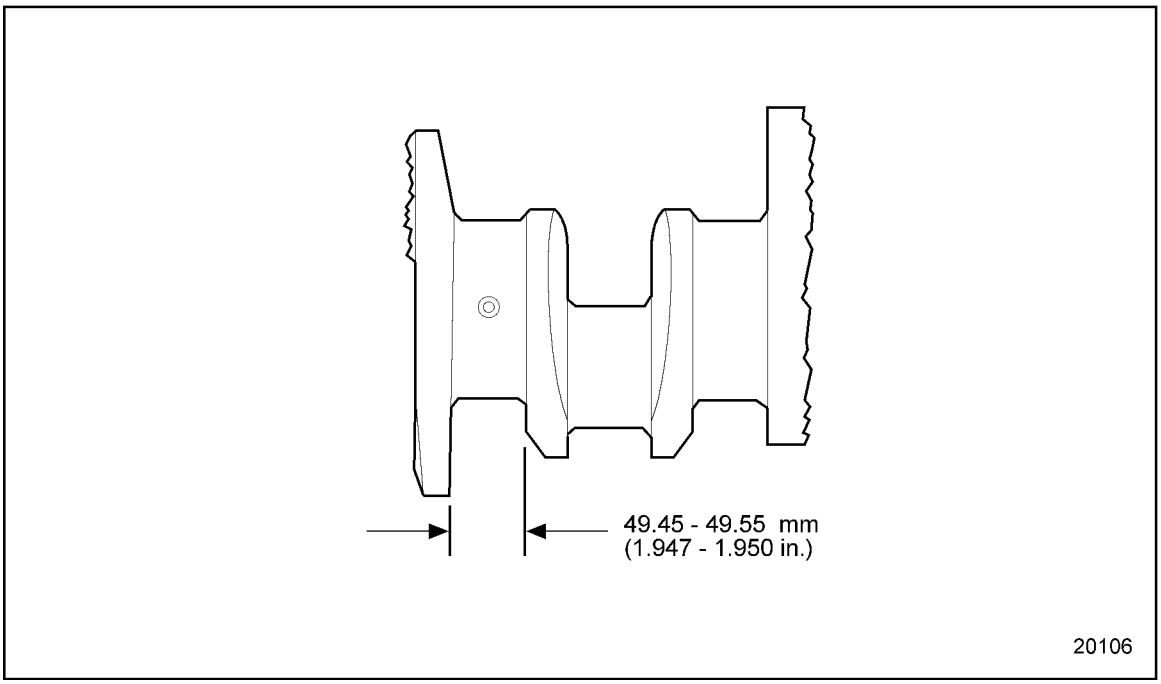

Figure 1-127 Dimensions for No. 6 Main Bearing Journal Thrust Width

1.7.2.5 Inspection for Cracks

Carefully check the crankshaft for cracks which start at an oil hole and follow the journal surface at an angle of 45 degrees to the axis. Any crankshaft with such cracks must be replaced. Several methods of determining the presence of minute cracks not visible to the eye are available: refer to section 1.7.2.6, for magnetic particle method, refer to section 1.7.2.7, for fluorescent magnetic particle method, or refer to section 1.7.2.8, for fluorescent penetrant method.

(Rev. 2004) *All information subject to change without notice.*
6SE483 0401 Copyright © 2004 DETROIT DIESEL CORPORATION

1.7.2.6 Magnetic Particle Method

Magnetize the crankshaft and then cover it with a fine magnetic powder or solution. The crankshaft must be demagnetized after the test to avoid engine damage.

NOTICE:
Very fine cracks may be missed using the magnetic particle method, especially on discolored or dark surfaces. They will be disclosed under the black light. If the crankshaft is discolored or has dark surfaces, the magnetic particle method should not be used. Refer to section 1.7.2.7for suitable alternate method.

Flaws, such as cracks, form a small local magnet which causes the magnetic particles in the powder or solution to gather there, effectively marking the crack.

1.7.2.7 Fluorescent Magnetic Particle Method

This method is similar to the magnetic particle method, but is more sensitive since it employs magnetic particles which are fluorescent and glow under black light. Refer to section 1.7.2.6.

1.7.2.8 Fluorescent Penetrant Method

This is a method which may be used on both non-magnetic and magnetic materials. A highly fluorescent liquid penetrant is applied to the part. Then the excess penetrant is removed from the surface and the part is dried. A developing powder is then applied which helps to draw the penetrant out of the flaws by capillary action. Inspection is carried out under a black light.

A majority of indications revealed by the above inspection methods are normal and harmless and only in a small percentage of cases is reliability of the part impaired when indications are found. Since inspection reveals the harmless indications with the same intensity as the harmful ones, detection of the indications is but a first step in the procedure. Interpretation of the indications is the most important step.

All crankshafts are magnetic particle inspected after manufacture to ensure against any shafts with harmful indications getting into the original equipment or factory parts stock.

Crankshaft failures are rare and when one cracks or breaks completely, it is very important to make a thorough inspection for contributory factors. Unless abnormal conditions are discovered and corrected, there will be a repetition of the failure.

 Copyright © 2004 DETROIT DIESEL CORPORATION

There are two types of loads imposed on a crankshaft in service: a bending force and a twisting force. The design of the shaft is such that these forces produce practically no stress over most of the surface. Certain small areas, designated as critical areas, sustain most of the load. See Figure 1-128.

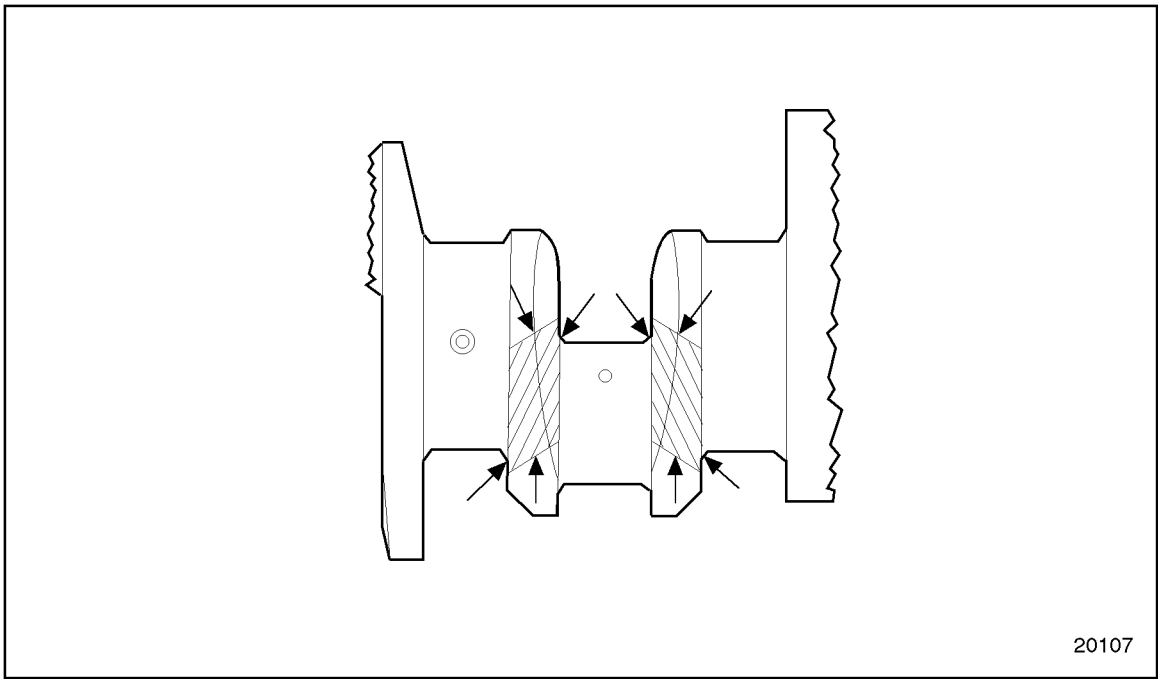

Figure 1-128 Critical Crankshaft Loading Zones

1.7.2.9 Bending Fatigue

Failures can result from bending of the crankshaft.

The crankshaft is supported between each of the cylinders by a main bearing and the load imposed by the gas pressure on top of the piston is divided between the adjacent bearings. An abnormal bending stress in the crankshaft, particularly in the crank fillet, may be a result of misalignment of the main bearing bores, improperly fitted bearings, bearing failures, a loose or broken bearing cap, or unbalanced pulleys. Also, drive belts which are too tight will impose a bending load upon the crankshaft.

Failures resulting from bending start at the pin fillet and progress throughout the crank cheek, sometimes extending into the main journal fillet. If main bearings are replaced due to one or more badly damaged bearings, a careful inspection must be made to determine if any cracks have started in the crankshaft. These cracks are most likely to occur on either side of the damaged bearing.

(Rev. 2004) *All information subject to change without notice.*
6SE483 0401 Copyright © 2004 DETROIT DIESEL CORPORATION

1.7.2.10 Torsional Fatigue

Failures result from torsional vibration which takes place at high frequency. A combination of abnormal speed and load conditions may cause the twisting forces to set up a vibration, referred to as torsional vibration, which imposes high stresses at the locations. See Figure 1-129.

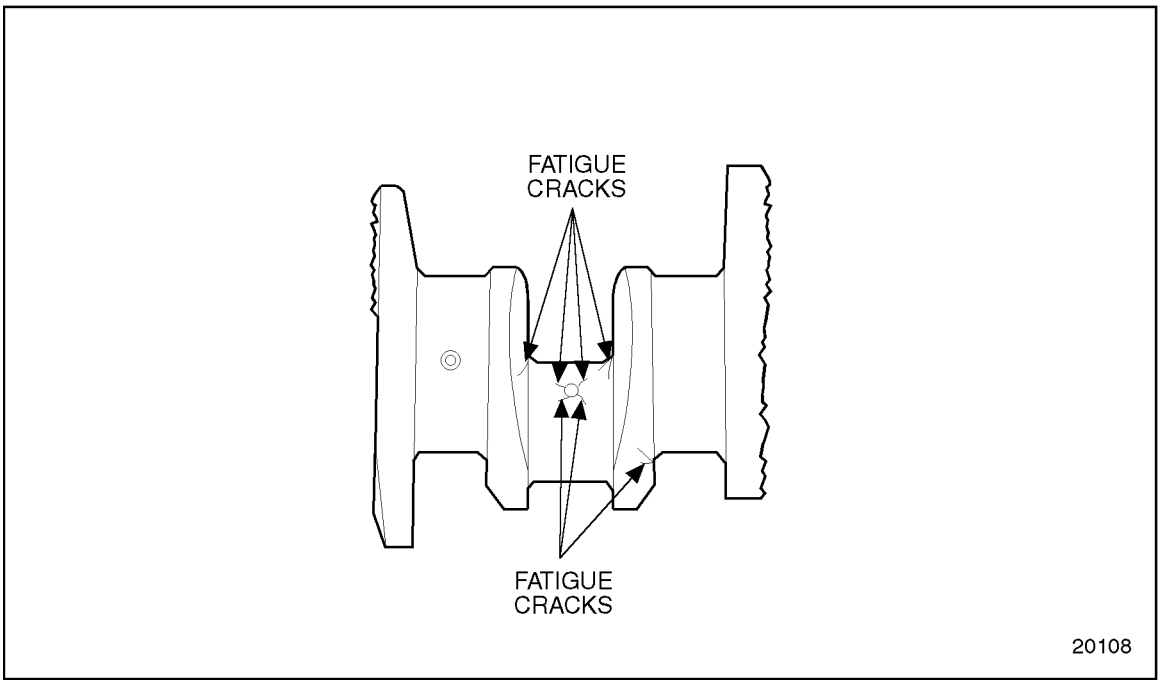

Figure 1-129 Crankshaft Fatigue Cracks

Torsional stresses may produce a fracture in either the connecting rod journal or the crank cheek in the rear. Torsional failures may also occur at the front end of the crankshaft at the crankshaft timing gear drive key slot. Connecting rod journal failures are usually at the fillet or oil hole at 45 degrees to the axis of the shaft.

A loose, damaged or defective vibration damper, a loose flywheel or the introduction of improper or additional pulleys or couplings are usual causes of this type of failure. Also, overspeeding of the engine or overriding the engine electronic control system to allow engine overspeeding may be contributory factors.

1.7.2.11 Crankshaft Cracks

As previously mentioned, most of the indications found during inspection of the crankshaft are harmless. The two types of indications to look for are circumferential fillet cracks at the critical areas and 45° cracks (45° to the axis of the shaft) starting from either the critical fillet locations or the connecting rod journal holes. See Figure 1-129. Replace the crankshaft when cracks of this nature are found. Refer to section 1.7.3.

 Copyright © 2004 DETROIT DIESEL CORPORATION

1.7.2.12 Crankshaft Grinding

The use of properly remanufactured crankshafts is very important to maximize crankshaft main and connecting rod bearing life.

Remanufactured crankshafts must conform to specifications. See Figure 1-129. The dimensional requirements for journal axial profile, radial chatter and oil hole washout require confirmation with a Gould 1200 Surface Analyzer (or equivalent). Information on Gould 1200 is available in the "Glossary". Refer to section ADDITIONAL INFORMATION1.A.

NOTE:
Visual inspection cannot be relied upon to confirm the compliance to journal quality specifications.

The procedure of crankshaft journal polishing can easily create axial profile and oil hole washout conditions beyond specifications. Any polishing operation should be followed by Gould 1200 (or equivalent) measurements to assure conformance to remanufactured specifications. Refer to section ADDITIONAL INFORMATION1.A, "Crankshaft Remanufactoring Procedures".

All used crankshafts that have not been reground must meet the dimensional specifications standard or be reground to specifications. Refer to section ADDITIONAL INFORMATION1.A, "Crankshaft Remanufactoring Procedures".

In addition to standard size crankshaft thrust washers, 0.127 mm (0.005 in.) and 0.254 mm (0.010 in.) oversize thrust washers are available. Thrust surface specifications are listed in Table 1-23.

Remanufactured crankshafts should be stamped on the edge of the No. 1 crank throw (counterweight) with the appropriate undersize dimensions for identification purposes.

NOTE:
Crankshaft main bearing journals and/or connecting rod journals which exhibit discoloration due to excessive overheating from bearing failure are NOT acceptable for rework.

If one or more main or connecting rod journals require grinding, grind all of the main journals or all of the connecting rod journals to the same required size.

(Rev. 2004) *All information subject to change without notice.*
6SE483 0401 Copyright © 2004 DETROIT DIESEL CORPORATION

1.7.3 Installation of Crankshaft

Install the crankshaft using the following procedure:

CAUTION:

To avoid injury from flying debris when using compressed air, wear adequate eye protection (face shield or safety goggles) and do not exceed 40 psi (276 kPa) air pressure.

1. Steam clean it to remove the rust preventive and blow out the oil passages with compressed air.
2. Install the upper main bearing shells in the block. If the old bearing shells are to be used again, install them in the same locations from which they were removed. Refer to section 1.9.3.

NOTE:
When a new or reground crankshaft is installed, ALL new main and connecting rod (upper and lower) bearing shells and new thrust washers must also be installed.

NOTE:
If the crankshaft surfaces were reground, it may be necessary to install oversize thrust washers on one or both sides of the No. 6 main journal. See Figure 1-121.

3. Install the thrust washer upper halves in the counterbores on either side of the No. 6 bearing saddle. Coat the backs of the thrust washers (without oil grooves) with petroleum jelly and stick them in place with the oil-grooved sides facing away from the saddle.
4. Apply clean engine oil 360 degrees around all crankshaft bearing journals and install the crankshaft in place so that the timing marks on the crankshaft timing gear and the bull gear are aligned. Refer to section 1.22.2.1.

NOTE:
If timing gear and timing wheel were removed install timing gear and timing wheel prior to installation of crankshaft. Refer to section 1.28.3.

NOTE:
It may be easier to remove the bull gear assembly and re-time the engine.

 Copyright © 2004 DETROIT DIESEL CORPORATION

5. Install the main bearing shells in the main bearing caps as follows:

NOTE:
Whether the engines were built with or without thrust washers in the No. 6 main bearing cap, they are no longer required; they do not need to be reinstalled.

[a] Align the tang on the lower main bearing shell with the groove in the main bearing cap. Install the bearing shell to the main bearing cap.

NOTE:
The main bearing caps are bored in position and stamped with position number. They must be installed in their original positions, with the marked (numbered) side of each cap toward the cooler (right) side of the cylinder block.

[b] If the old bearing shells are to be used again, install them in the same bearing caps from which they were removed.

6. Install the main bearing caps together with lower bearing shells in place.

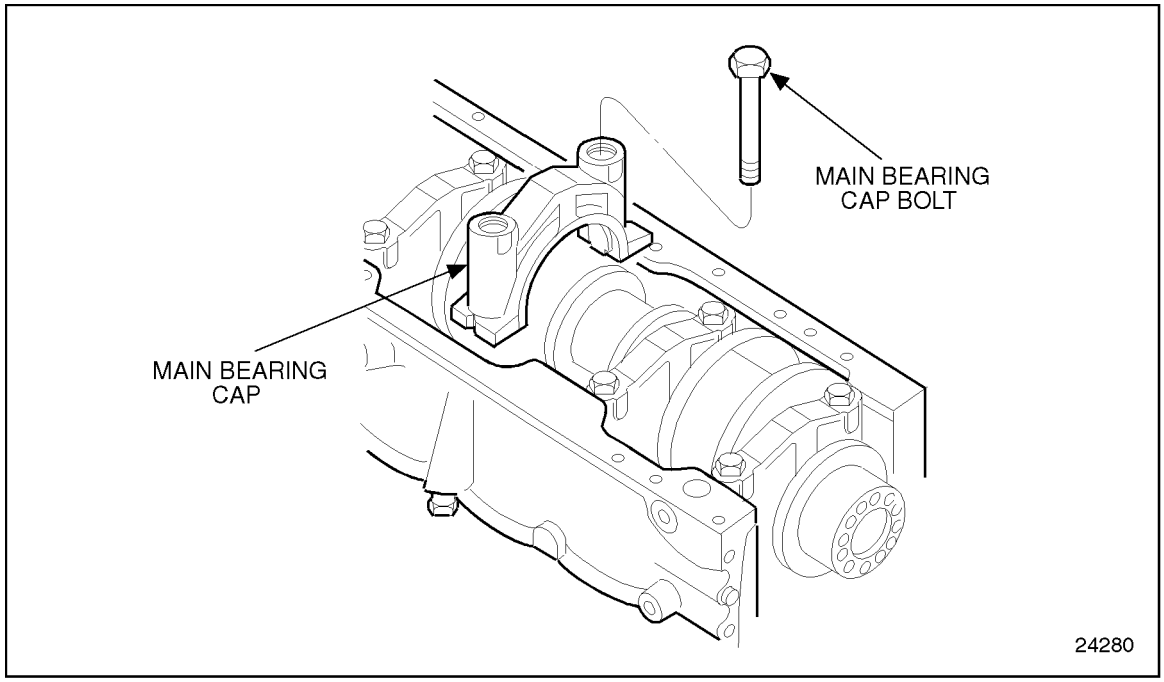

Figure 1-130 Main Bearing Cap Installation

(Rev. 2004) *All information subject to change without notice.*
6SE483 0401 Copyright © 2004 DETROIT DIESEL CORPORATION

7. Apply a small quantity of International Compound #2® (or equivalent) to the bolt threads and underside of the bolt heads. Install the main bearing cap bolts and draw them up snug. See Figure 1-130. Rap the main bearing caps sharply with a fiber mallet or plastic hammer to insure the caps are fully seated.
8. Torque all of the main bearing cap bolts to 470-530 N·m (347-391 lb·ft). Begin at the center caps and work progressively toward each end. Tighten the bolts to half the specified torque and then repeat the tightening sequence to the torque limit.

NOTE:
If the bearings have been installed properly, the crankshaft will turn freely with all of the main bearing cap bolts drawn to the specified torque.

9. Check the crankshaft end by moving the crankshaft toward the gage with a small 304.8 mm (less than 12 in.) pry bar. See Figure 1-131. Keep a constant pressure on the pry bar and zero the pointer on the dial indicator. Then, remove and insert the pry bar on the other side of the bearing cap. Force the crankshaft in the opposite direction and note the amount of end play on the dial. The end play should be 0.099-0.419 mm (0.0039 -0.0165 in.). Insufficient end play can be the result of a misaligned No. 6 main bearing, a misaligned upper thrust washer or a burr or dirt on the inner face of one or more of the thrust washers.

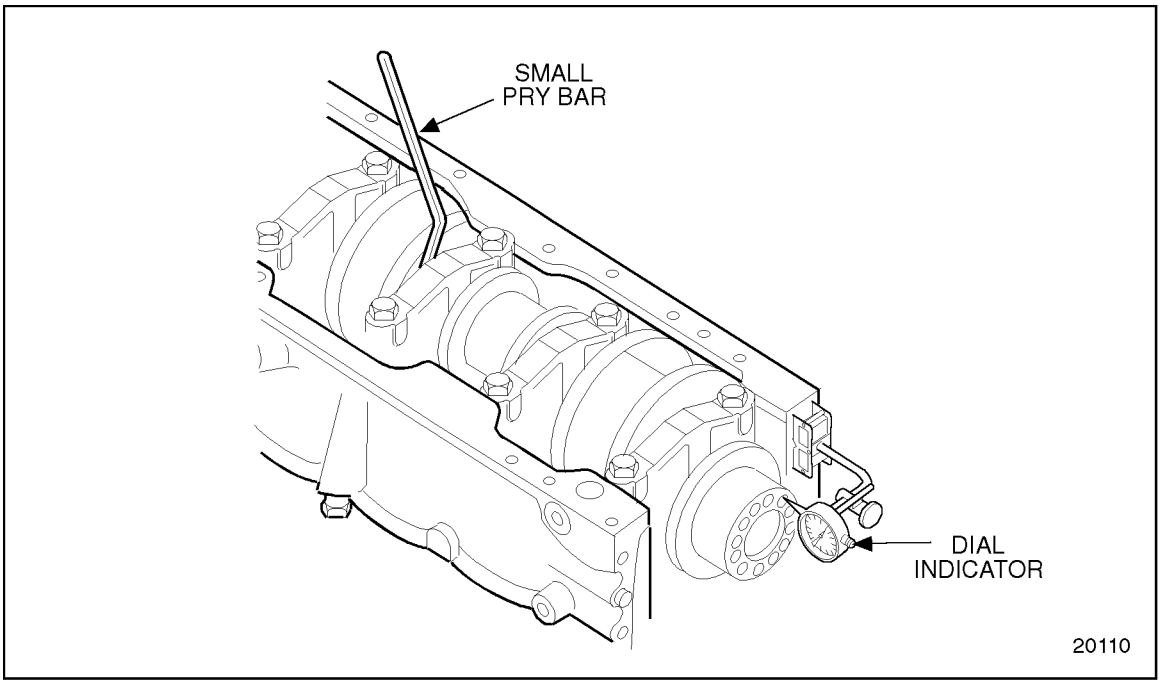

Figure 1-131 Measuring Crankshaft End Play

 Copyright © 2004 DETROIT DIESEL CORPORATION

10. Assemble the timing wheel and crankshaft gear on the crankshaft. Refer to section 1.28.3.
11. Install the piston and connecting rod assemblies. Refer to section 1.19.5. Torque the connecting rod cap nuts to 160-185 N·m (118-137 lb·ft).
12. Install the cylinder head. Refer to section 1.2.5.
13. Install the flywheel housing. Refer to section 1.16.3.
14. Replace the rear crankshaft seal with new seal and sleeve assembly. Refer to section 1.8.7.
15. Install the flywheel. Refer to section 1.14.3.
16. Install the lubricating oil pump, inlet and outlet pipes. Refer to section 3.2.6.
17. Install the gear case cover and engine front support. Refer to section 1.10.3.
18. Replace the front crankshaft seal with new seal and sleeve assembly. Refer to section 1.8.7.
19. Install the viscous vibration damper. Refer to section 1.12.3.
20. Install the crankshaft pulley. Refer to section 1.13.3.
21. Install the oil pan. Refer to section 3.11.4.
22. Use a chain hoist and spreader bar with hooks attached to the lifting brackets at each end of the engine and remove the engine from the overhaul stand. See Figure 1-5.
23. Remove the overhaul stand adaptor plate from the engine block. See Figure 1-7.
24. Install any accessories that were removed.
25. Install the engine to the equipment from which it was removed.
26. Fill the cooling system. Refer to section 13.13.4.
27. Fill the engine crankcase to correct operating level. Refer to section 13.13.1.
28. After replacing the main or connecting rod bearings or installing a new or reground crankshaft, operate the engine as outlined in the "Run-In Schedule." Refer to section 11.8.3.2.

(Rev. 2004) *All information subject to change without notice.*
6SE483 0401 Copyright © 2004 DETROIT DIESEL CORPORATION

1.8 CRANKSHAFT OIL SEALS

An oil seal is used at each end of the crankshaft to retain the lubricating oil in the crankcase. The sealing lips of the crankshaft oil seals are held firmly, but not tight, against the crankshaft sealing surfaces by a spring, thus preventing oil from escaping from the engine crankcase.

A unidirectional laydown-lip crankshaft oil seal, with a dust lip, is used at the front of the crankshaft. The rear oil seal is pressed into the flywheel housing. With dry flywheel housings, a single Teflon-lip seal is used. With wet flywheel housings, a two-lip, laydown type seal is used. See Figure 1-132 and see Figure 1-133.

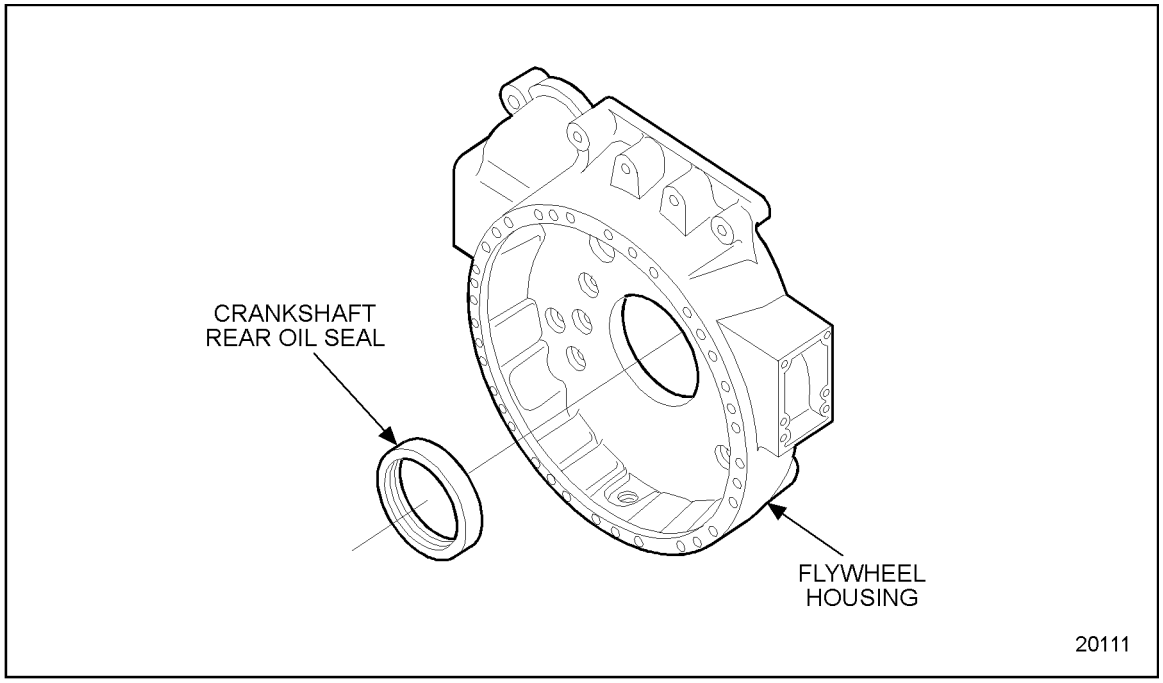

Figure 1-132 Crankshaft Rear Oil Seal

NOTICE:
Failure to use the required seal in a dry or wet flywheel housing environment may result in seal damage and oil leakage.

A unidirectional, single Teflon lip seal with an integral dust lip is used at the rear of engines with dry flywheel housings.

 Copyright © 2004 DETROIT DIESEL CORPORATION

The Chicago Rawhide® unitized front oil seal is pressed into the gear case cover after the cover is installed. See Figure 1-133.

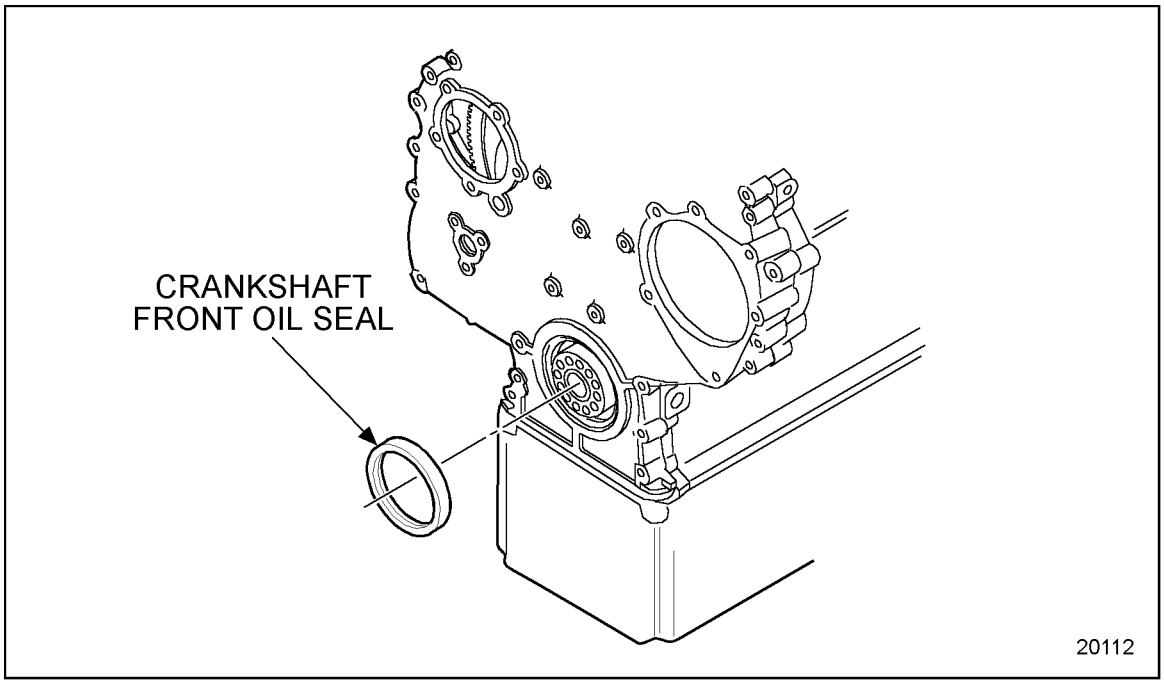

Figure 1-133 Crankshaft Front Oil Seal

The seal element runs against a wear sleeve which is an integral part of the seal assembly for the Chicago Rawhide seal.

Teflon® is a registered trademark of E.I. DuPont de Nemours and Company, Inc.
Chicago Rawhide® is a registered trademark of CR Industries.

The lip of the seals bears against the crankshaft hub surface.

(Rev. 2004) *All information subject to change without notice.*
6SE483 0401 Copyright © 2004 DETROIT DIESEL CORPORATION

1.8.1 Repair or Replacement of Oil Seal

To determine if repair is possible or replacement is necessary, perform the following procedure. See Figure 1-134.

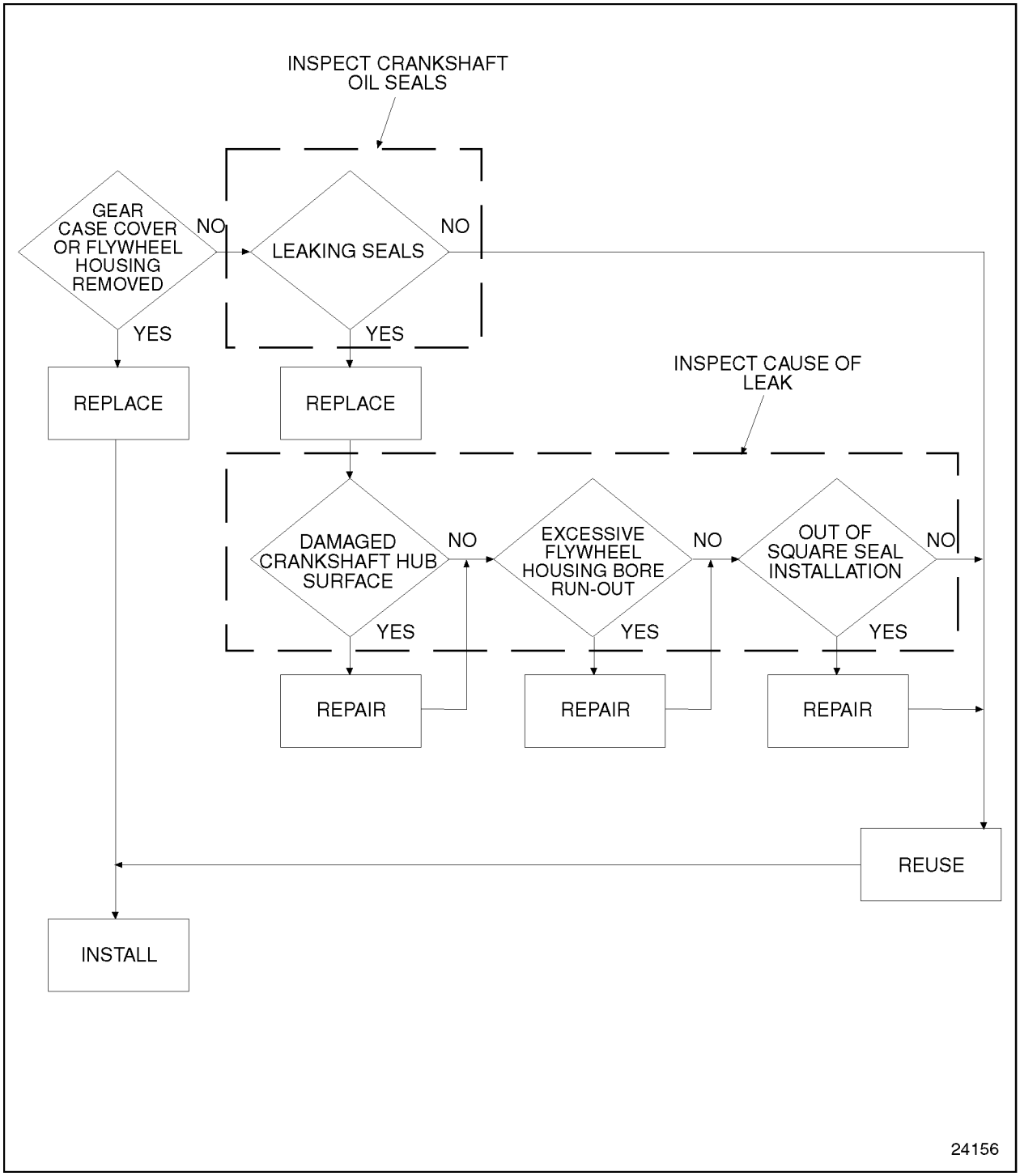

Figure 1-134 Flowchart for Repair or Replacement of Crankshaft Oil Seal

 Copyright © 2004 DETROIT DIESEL CORPORATION

1.8.2 Removal of Front and Rear Crankshaft Oil Seal

The rear crankshaft oil seals can be removed with either the flywheel housing installed or removed. The front crankshaft seal can be removed with the front gear case housing removed or installed.

NOTICE:
Due to the possibility of damage to the crankshaft oil seals, any time the gear case cover or flywheel housing is removed from the engine, the crankshaft oil seals must be replaced.

1. Remove the crankshaft oil seal as follows:
   [a] If the gear case housing is removed, refer to section 1.8.3.
   [b] If the gear case housing is installed, refer to section 1.8.4.
2. For the flywheel housing seal, refer to section 1.8.5.

(Rev. 2004) *All information subject to change without notice.*
6SE483 0401 Copyright © 2004 DETROIT DIESEL CORPORATION

1.8.3 Removal of Front Crankshaft Oil Seal (Gear Case Housing Removed)

The Federal Mogul® front crankshaft oil seal may be removed with the gear case housing removed from the engine.

Perform the following steps if the gear case housing is removed from the engine.

NOTE:
The crankshaft oil seals must be removed if the gear case housing has been removed from the engine.

1. Support the outer face of the gear case housing on wood blocks.
2. Drive the oil seal out with a brass drift and hammer. Clean the seal bore in the housing. See Figure 1-135.

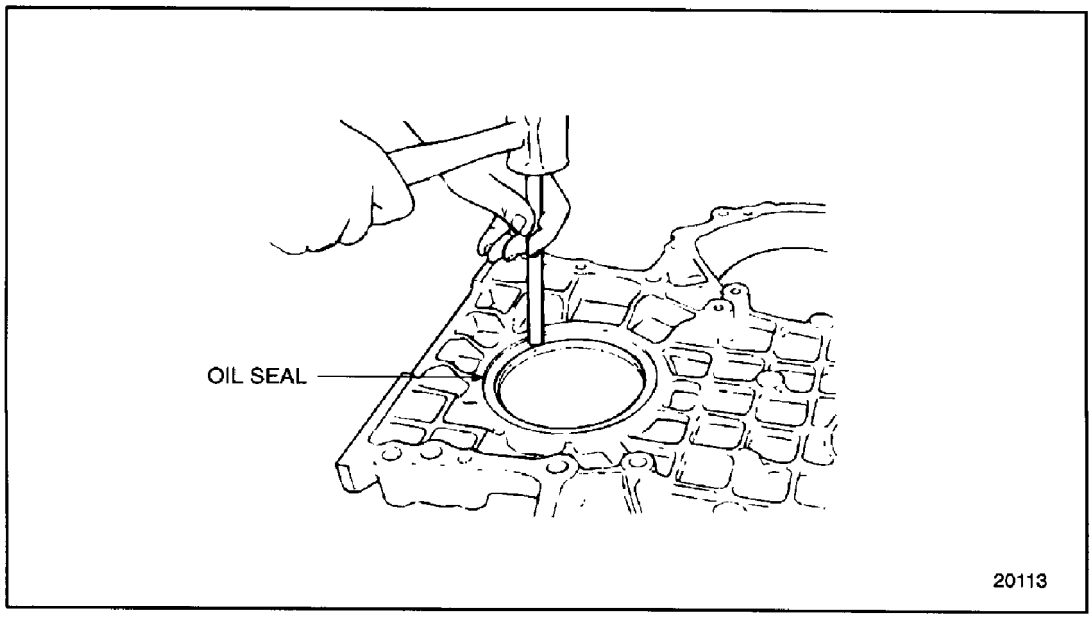

Figure 1-135 Front Crankshaft Oil Seal Removal

 Copyright © 2004 DETROIT DIESEL CORPORATION

1.8.4 Removal of Front Crankshaft Oil Seal (Gear Case Housing Still Installed)

The front crankshaft oil seal may be taken out without removing the gear case housing. This may be done by using oil seal removal tool J 41329 part of J 35993.

NOTE:
Before proceeding, determine if seal to be removed is Federal Mogul or Chicago Rawhide brand. Remove and clean all rust and dirt from the crankshaft surface.

Remove Federal Mogul seal as follows:

1. Install puller, J 41329 part of J 35993, over crankshaft and hold against seal. See Figure 1-136.
2. Using variable speed drill motor and 5/32" bit, drill through outer and inner case of seal using smallest hole "A" as a guide.

(Rev. 2004) *All information subject to change without notice.*
6SE483 0401 Copyright © 2004 DETROIT DIESEL CORPORATION

3. Without moving J 41329 part of J 35993, drill two additional "A" holes equally spaced.

NOTE:
All six holes may be drilled if using three holes proves unsuccessful in pulling seal.

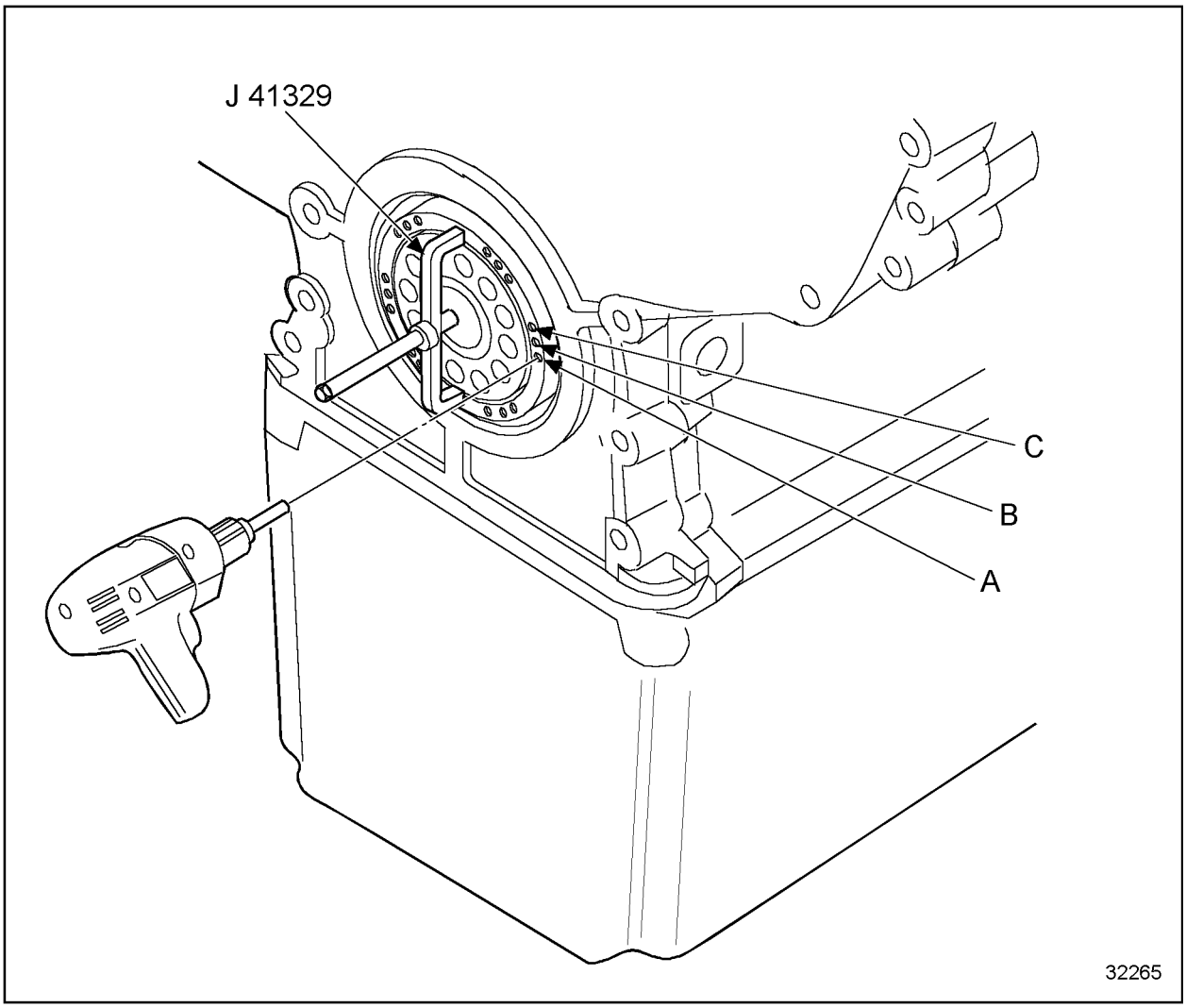

Figure 1-136 Removing Front Crankshaft Oil Seal from Gear Case Cover

4. Rotate J 41329 part of J 35993 clockwise until the "B" holes align with drilled holes and install sheet metal screws.
5. Apply thread lubricant, J 23444-A part of J 35686, to forcing screw and remove seal.
6. Remove the sheet metal screws from the tool. Discard the oil seal.

 Copyright © 2004 DETROIT DIESEL CORPORATION

7. Remove oil sleeve using crank oil sleeve remover, J 37075-A. See Figure 1-137.

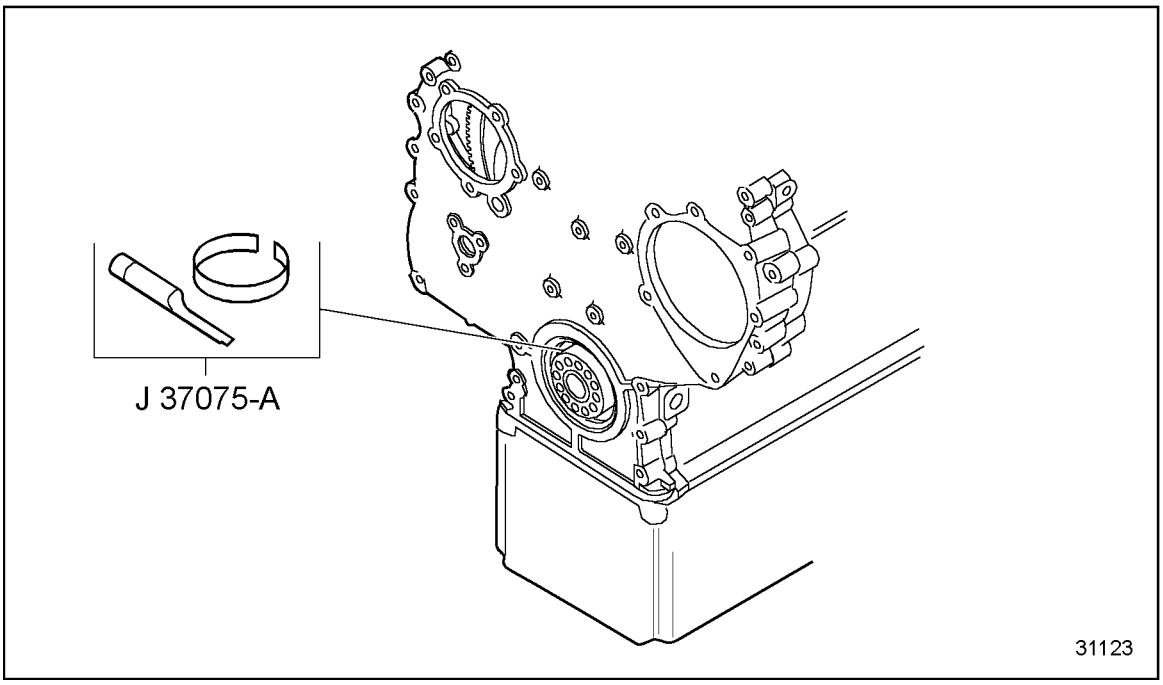

Figure 1-137 Oil Seal Sleeve Removal Tool for the Federal Mogul Seal

NOTE:
Crocus cloth may be used to clean up the high spots from the surface of the crankshaft. Clean the crankshaft contact surface thoroughly.

(Rev. 2004) *All information subject to change without notice.*
6SE483 0401 Copyright © 2004 DETROIT DIESEL CORPORATION

Remove the Chicago Rawhide seal as follows:

Chicago Rawhide® is a registered trademark of CR Industries.

1. Install puller, J 41329 part of J 35993, over crankshaft and hold against seal. See Figure 1-138.

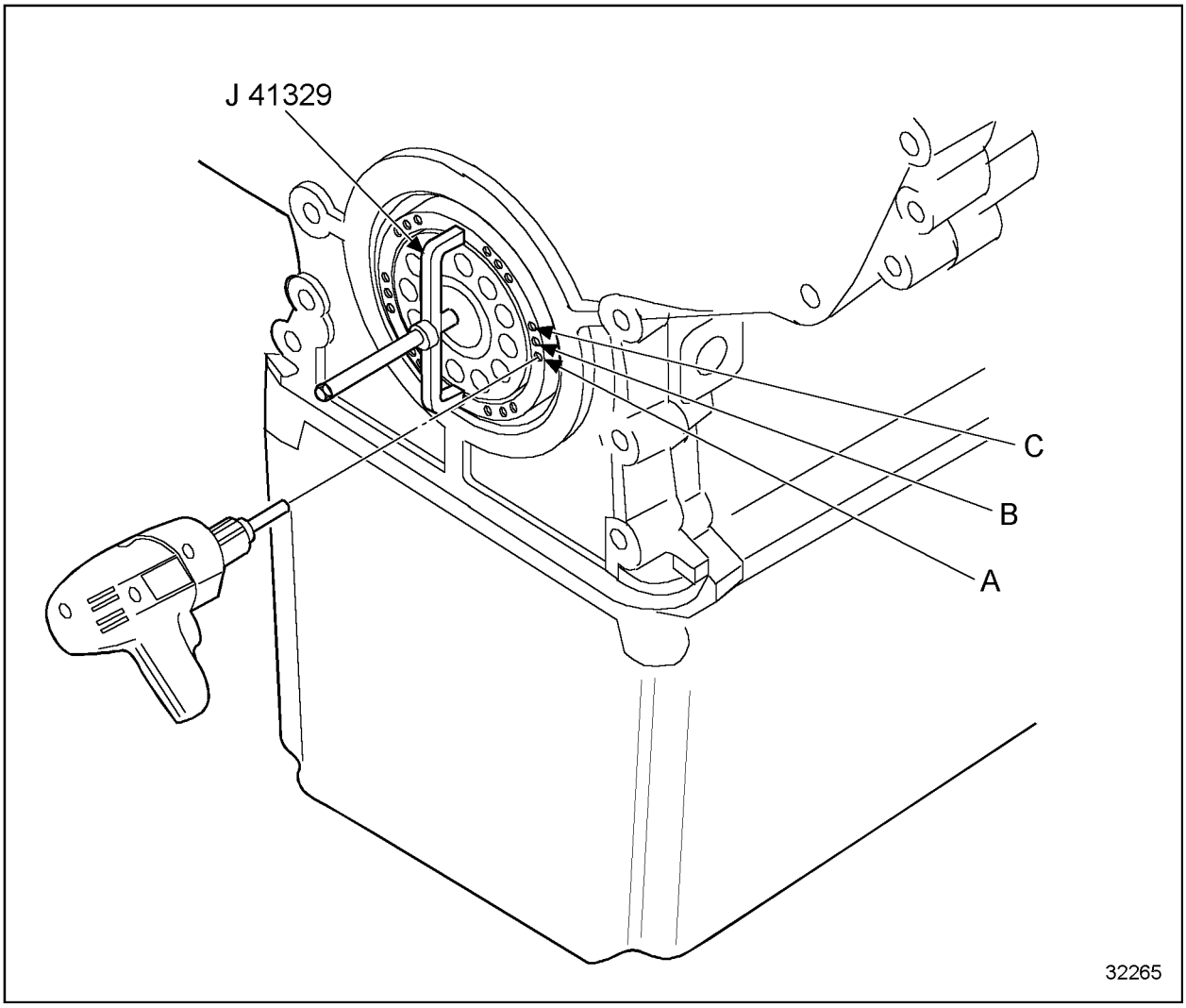

Figure 1-138 Removing Front Crankshaft Oil Seal from Gear Case Cover

2. Using variable speed drill motor and 5/32 in. bit, drill through outer and inner case of seal using smallest hole "A" as a guide.
3. Without moving J 41329 part of J 35993, drill two additional "A" holes equally spaced.

NOTE:
All six holes may be drilled if using three holes proves unsuccessful in pulling seal.

 Copyright © 2004 DETROIT DIESEL CORPORATION

4. Rotate J 41329 part of J 35993 clockwise until the "B" holes align with drilled holes and install sheet metal screws.
5. Apply thread lubricant, J 23444-A part of J 35686, to forcing screw and remove seal.

NOTE:
If seal is difficult to remove, there is probably debris on the crankshaft preventing the wear sleeve from passing over the crankshaft. Push the seal in 1/8", clean crankshaft surface thoroughly and repeat the removal procedure.

6. Remove the sheet metal screws from the tool. Discard the oil seal.

1.8.5 Removal of Rear Crankshaft Oil Seal (Flywheel Housing Installed)

The rear crankshaft oil seal may be taken out without removing the flywheel housing. This may be done by using oil seal removal tool, J 41329 part of J 35993.

1. To replace the rear oil seal, with transmission removed, remove the flywheel. Refer to section 1.14.2.

NOTE:
Before proceeding, determine if seal to be removed is Federal Mogul® or CR brand. Remove and clean all rust and dirt from the crankshaft surface.

(Rev. 2004) *All information subject to change without notice.*
6SE483 0401 Copyright © 2004 DETROIT DIESEL CORPORATION

Remove the Federal Mogul seal as follows:

1. Install puller, J 41329 part of J 35993, over crankshaft and hold against seal.
2. Using variable speed drill motor and 5/32" bit, drill through outer and inner case of seal using smallest hole "A" as a guide. See Figure 1-139.

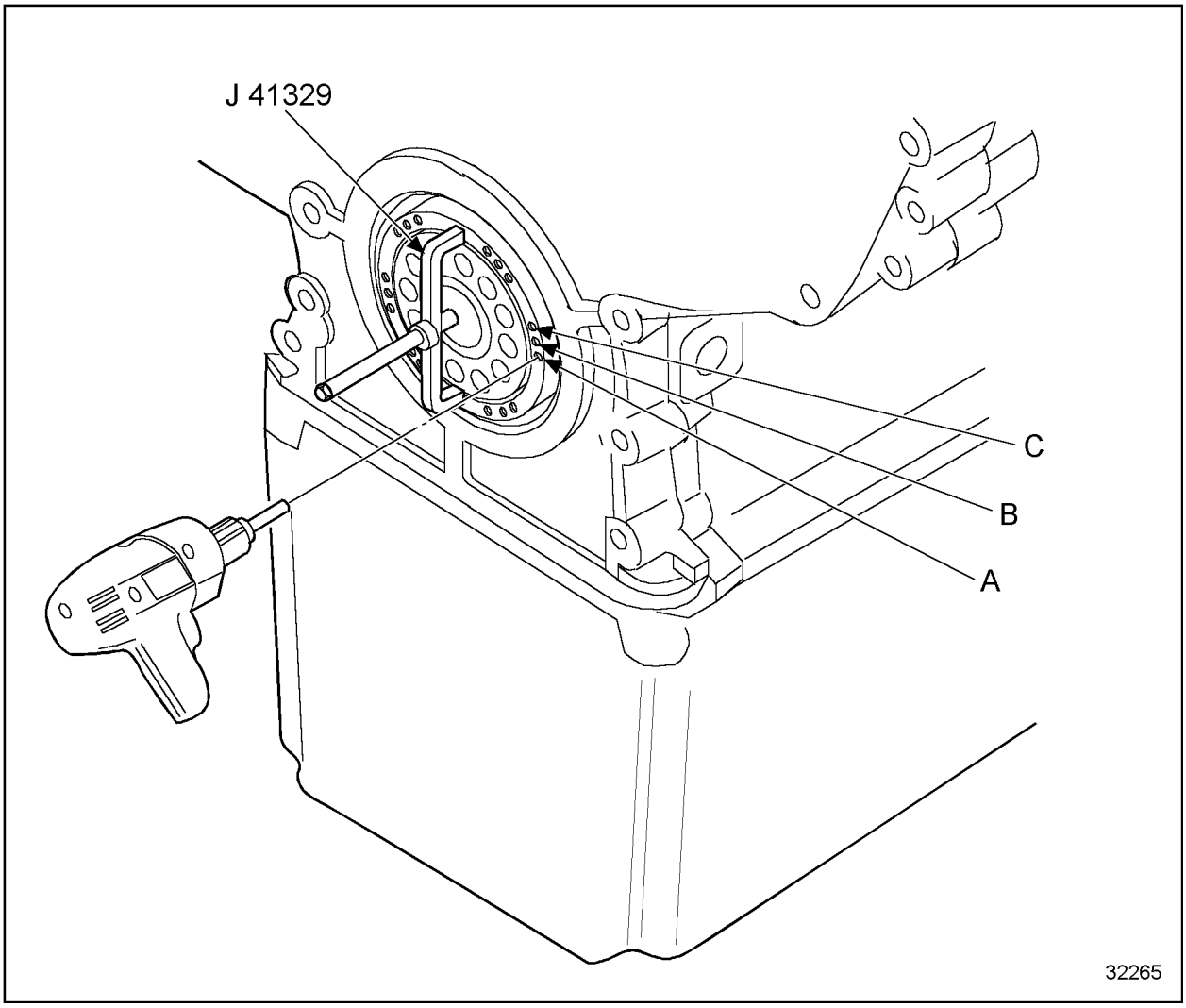

Figure 1-139 Rear Oil Seal Removal

3. Without moving J 41329 part of J 35993, drill two additional "A" holes equally spaced.

NOTE:
All six holes may be drilled if using three holes proves unsuccessful in pulling seal.

4. Rotate J 41329 part of J 35993 clockwise until the "B" holes align with drilled holes and install sheet metal screws.
5. Apply thread lubricant, J 23444-A part of J 35686, to forcing screw and remove seal.
6. Remove the sheet metal screws from the tool. Discard the oil seal.

 Copyright © 2004 DETROIT DIESEL CORPORATION

Remove the CR seal as follows:

1. Install puller, J 41329 part of J 35993, over crankshaft and hold against seal.
2. Using variable speed drill motor and 5/32" bit, drill through outer and inner case of seal using smallest hole "A" as a guide. See Figure 1-140.

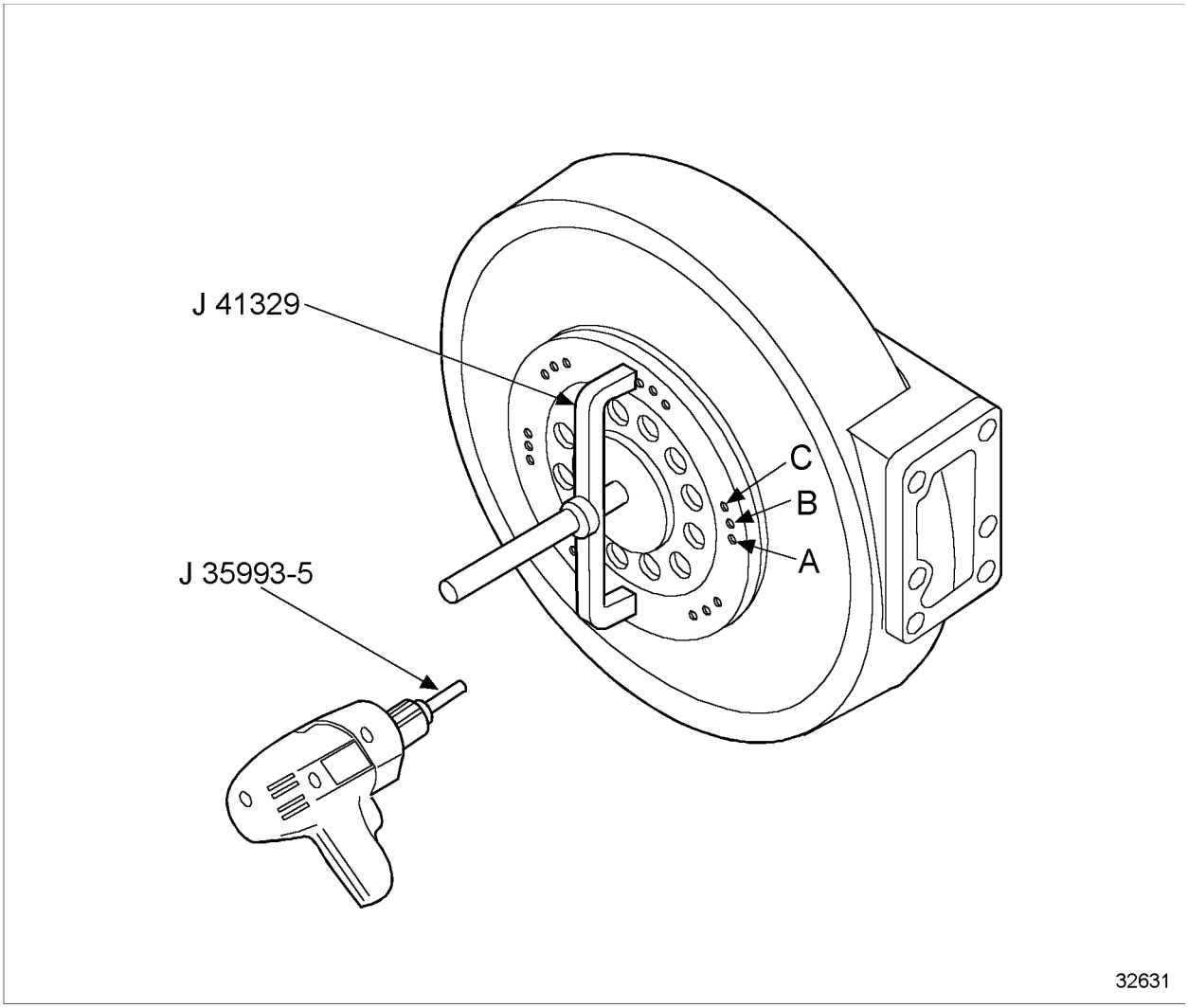

Figure 1-140 Rear Oil Seal Removal

NOTE:
All six holes may be used if using three holes proves unsuccessful in pulling seal.

3. Apply thread lubricant J 23444-A part of J 35686 to forcing screw and remove seal.

NOTE:
If seal is difficult to remove, push seal in 1/8 in., clean crankshaft surface thoroughly and repeat the removal procedure.

4. Remove the sheet metal screws from the tool. Discard the oil seal.

(Rev. 2004) *All information subject to change without notice.*
6SE483 0401 Copyright © 2004 DETROIT DIESEL CORPORATION

1.8.6 Removal of Rear Oversized Crankshaft Seal with Wear Sleeve

If seal removed is an oversized seal with wear sleeve, the old wear sleeve must also be removed as follows:

1. To remove a worn wear sleeve, use crank shaft wear sleeve remover, J 37075-A. See Figure 1-141.

   [a] Install hardened steel sleeve removal tool into flywheel housing bore. Using socket and breaker bar, rotate tool in three different locations, 2, 4, and 8 o'clock positions, to score the sleeve, until sleeve stretches sufficiently so it can be slipped off the end of the crankshaft.

   [b] Crocus cloth may be used to clean up the high spots from the surface of the crankshaft. Clean the crankshaft. Clean the crankshaft contact surface thoroughly.

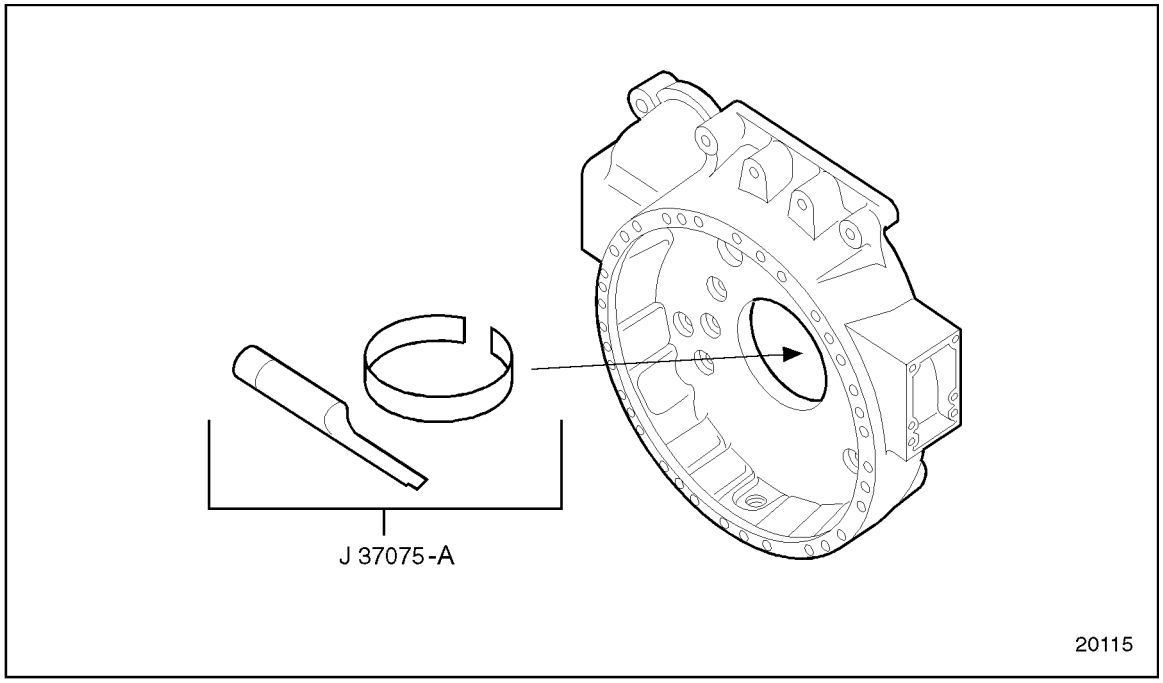

Figure 1-141 Rear Oil Seal Wear Sleeve Removal

 Copyright © 2004 DETROIT DIESEL CORPORATION

1.8.7 Installation of Front and Rear Crankshaft Oil Seal and Wear Sleeve

Install the front oil seal as follows:

An oil seal sleeve, integral to the seal assembly, is pressed onto the end of the crankshaft and provides a replacement wear surface at the point of contact with the oil seal. The sleeve and seal are supplied assembled. The assembly is installed using the crankshaft oil seal and sleeve installation tool. The Federal Mogul® oil seal is installed using tool,J 35686-A, with collar J 35686-10. The Chicago Rawhide® (CR) oil seal is installed using J 35686-B, but uses collar J 35686-20. See Figure 1-142 and see Figure 1-143.

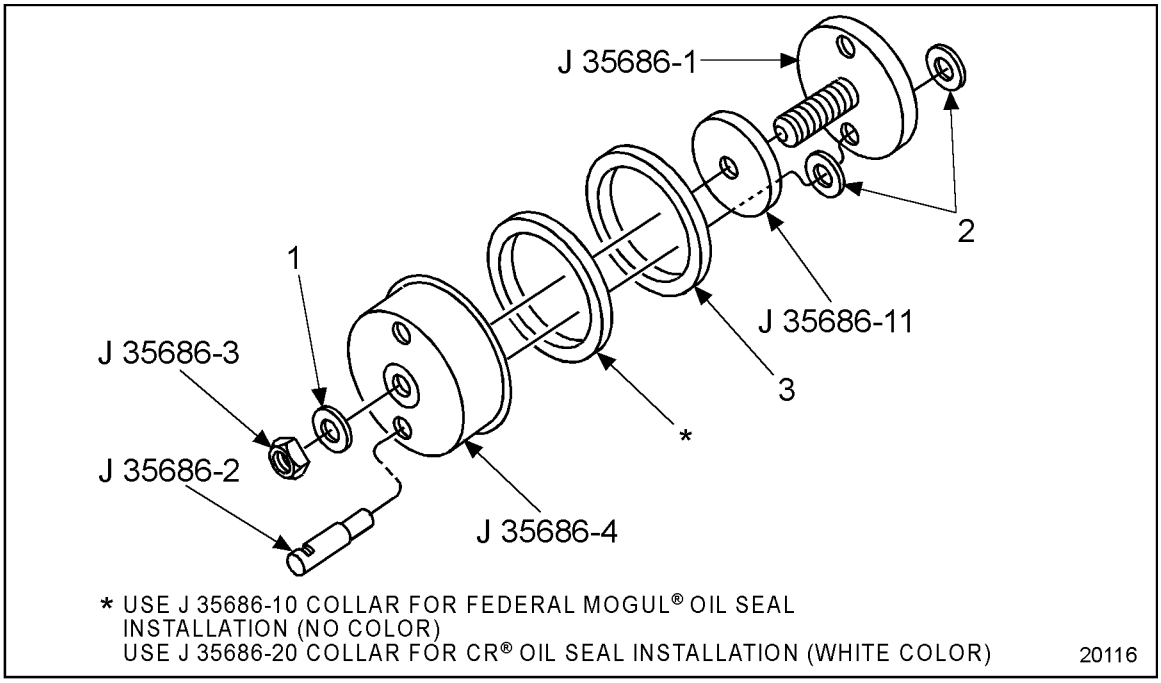

1. Washer
2. Washer
3. Crankshaft Seal

Figure 1-142 Front Crankshaft Oil Seal and Sleeve Installation Tool Set

(Rev. 2004) *All information subject to change without notice.*
6SE483 0401 Copyright © 2004 DETROIT DIESEL CORPORATION

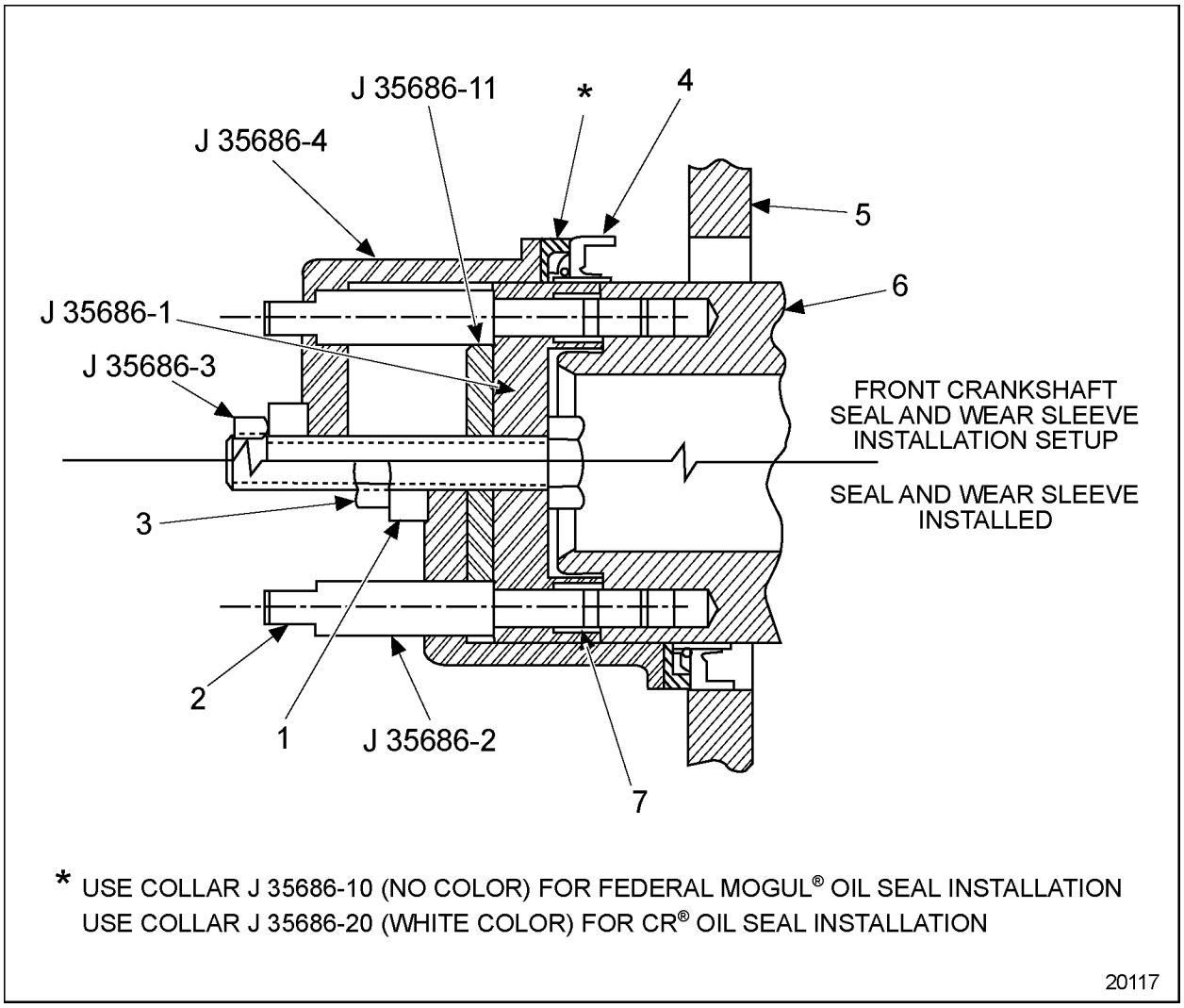

1. Thrust Plate
2. Wrench Flat 1/2 in., Guide Stud
3. 3/4 - 10 Hex Nut
4. Seal and Wear Sleeve Assembly
5. Gear Case/Flywheel Housing
6. Crankshaft
7. Guide Stud Retainer (O-ring)

Figure 1-143 Front Crankshaft Oil Seal

 Copyright © 2004 DETROIT DIESEL CORPORATION

Install an oversize oil seal and sleeve, as follows:

1. Install the new, oversize oil seal and wear sleeve assembly to the housing.

NOTE:
The assembly used in dry flywheel housings has a unidirectional, lip type Teflon inner sealing lip and a forward facing Teflon dust lip. The assembly used in wet flywheel housings has a double-lip seal with unidirectional inner and outer laydown type Teflon sealing lips.

2. Add new adapter ring and spacers. Do not separate the two.

(Rev. 2004) *All information subject to change without notice.*
6SE483 0401 Copyright © 2004 DETROIT DIESEL CORPORATION

Perform the following steps to install the rear oil sleeve:

NOTE:
Rear oil seals have a color code of green for engines built after 6R491683.

NOTE:
The assembly used in dry flywheel housing has unidirectional, lip type Teflon inner sealing lip and a forward facing Teflon dust lip. The assembly used in wet flywheel housings has a double-lip seal with unidirectional inner and outer laydown type Teflon sealing lips.

1. Install the two guide studs, J 35686-2, through the holes provided in the base, J 35686-1, and into two of the tapped holes in the crankshaft, 180 degrees apart. See Figure 1-144. Tighten the guide studs using the appropriate wrench on the flats of the studs. The base must be tight against the end of the crankshaft.

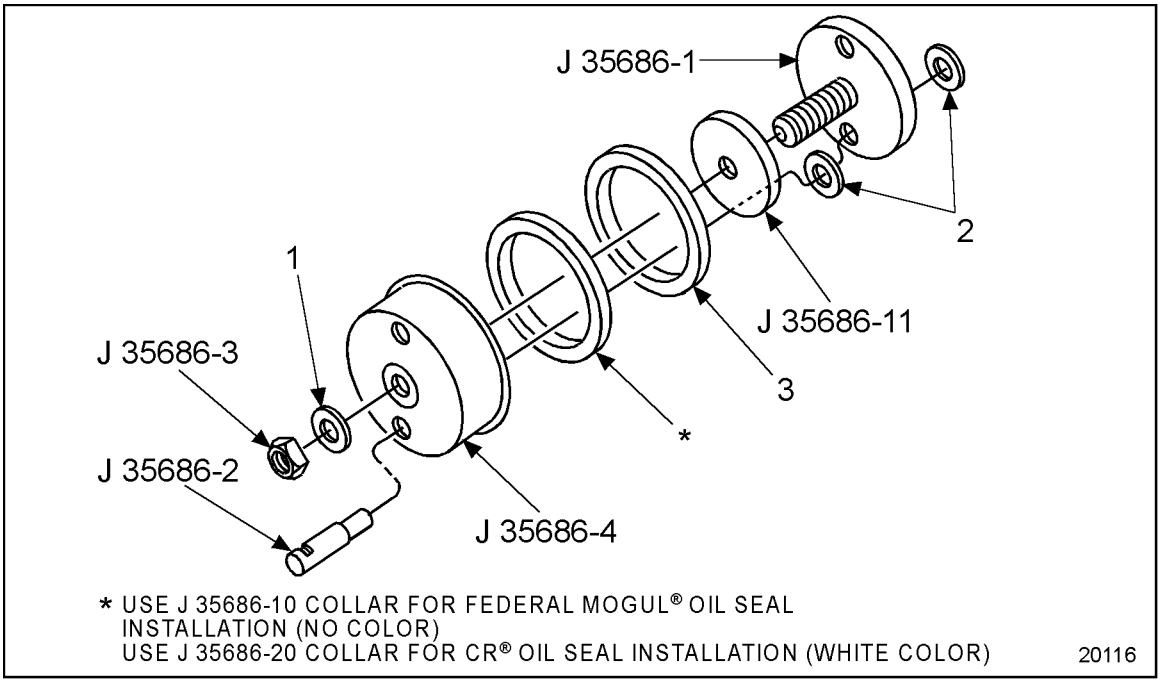

1. Washer
2. Washer
3. Crankshaft Seal

Figure 1-144 Rear Oil Seal Installation

2. For rear crankshaft oil seal installations only, install spacer and J 35686-11, to the center screw of the base. See Figure 1-145 and see Figure 1-143.

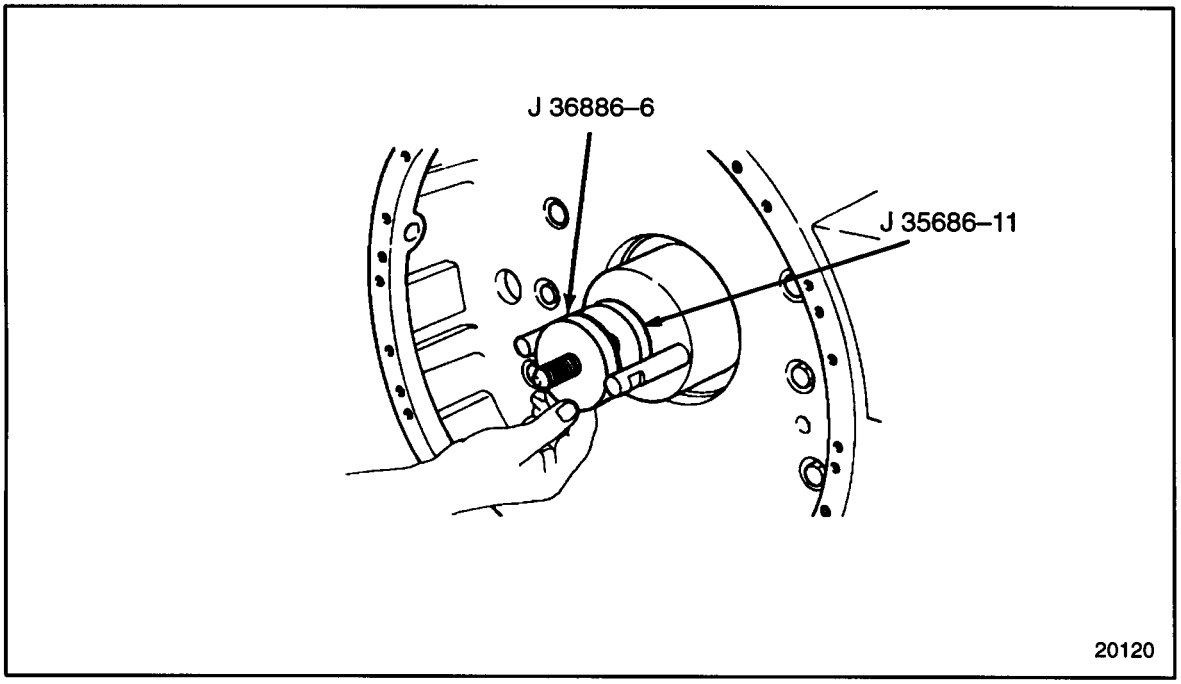

Figure 1-145 Rear Oil Seal Installation

(Rev. 2004) *All information subject to change without notice.*
6SE483 0401 Copyright © 2004 DETROIT DIESEL CORPORATION

3. Install the rear housing and adapter ring with seal and sleeve assembly in place on the guide studs. See Figure 1-146.

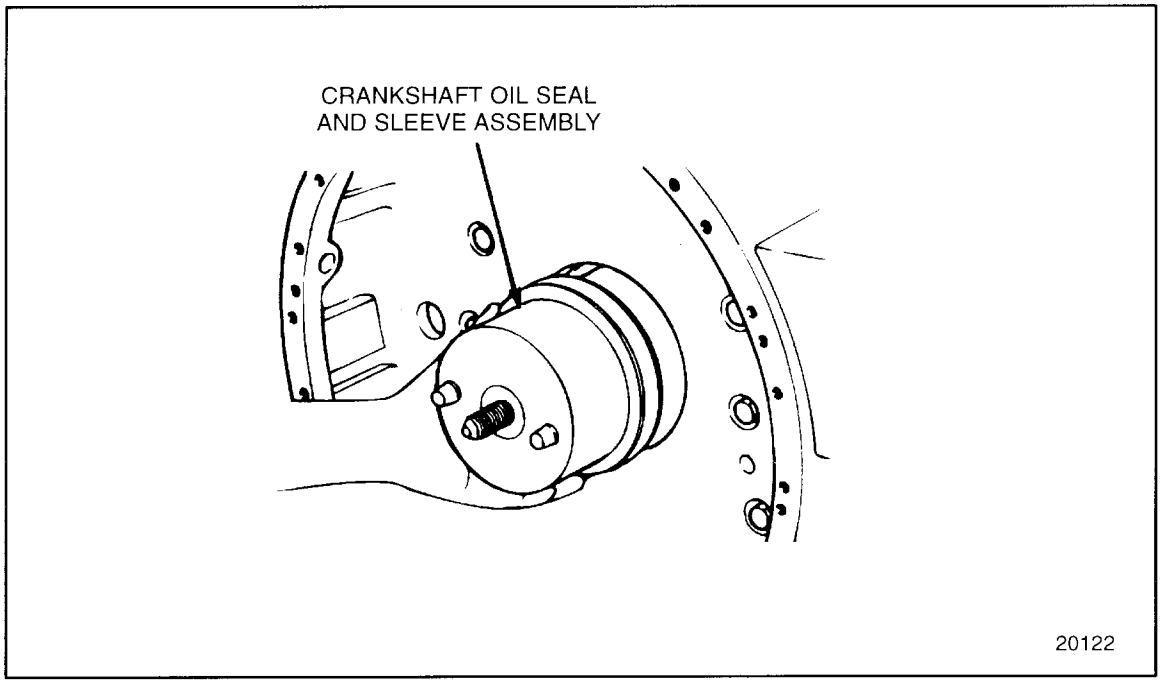

Figure 1-146 Rear Oil Seal and Sleeve Installation

 Copyright © 2004 DETROIT DIESEL CORPORATION

4. Install the thrust bearing tool with the case side toward the installer housing. Install the hex nut to the center screw of the base. See Figure 1-147.

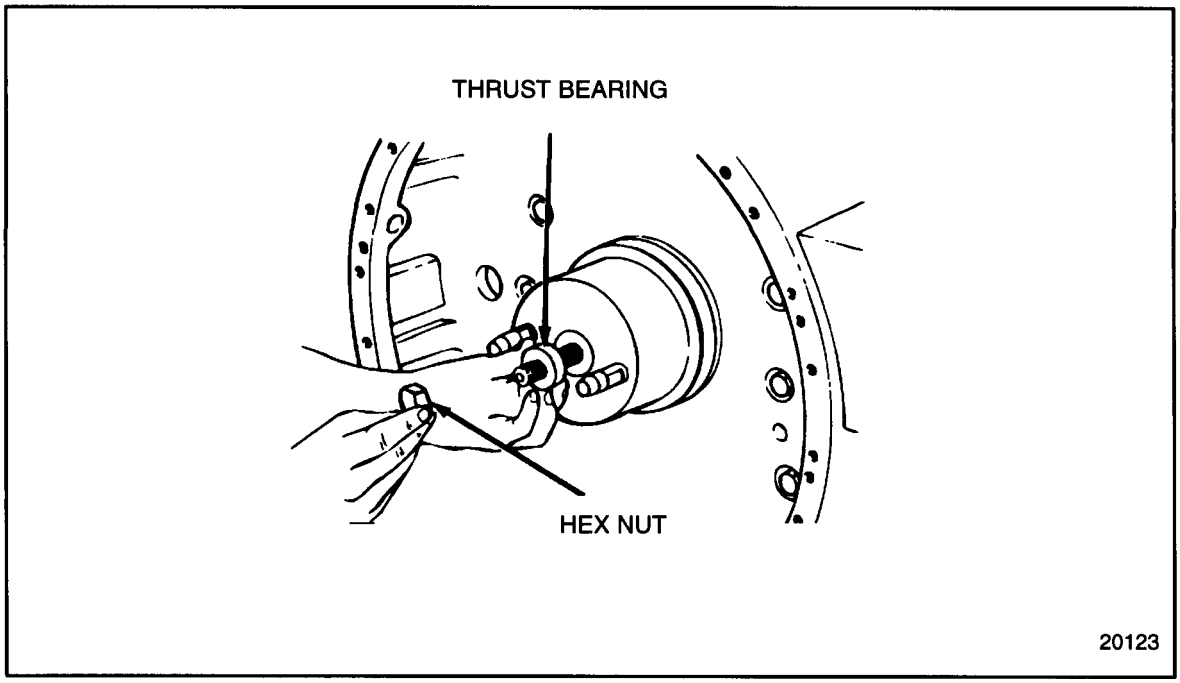

Figure 1-147 Thrust Bearing Installation

(Rev. 2004) *All information subject to change without notice.*
6SE483 0401 Copyright © 2004 DETROIT DIESEL CORPORATION

5. Tighten the hex nut by hand until all the slack is taken up. Use a ratchet and socket to tighten the hex nut, and install the wear sleeve to the crankshaft and the oil seal to the flywheel housing and/or gear case cover. See Figure 1-148.

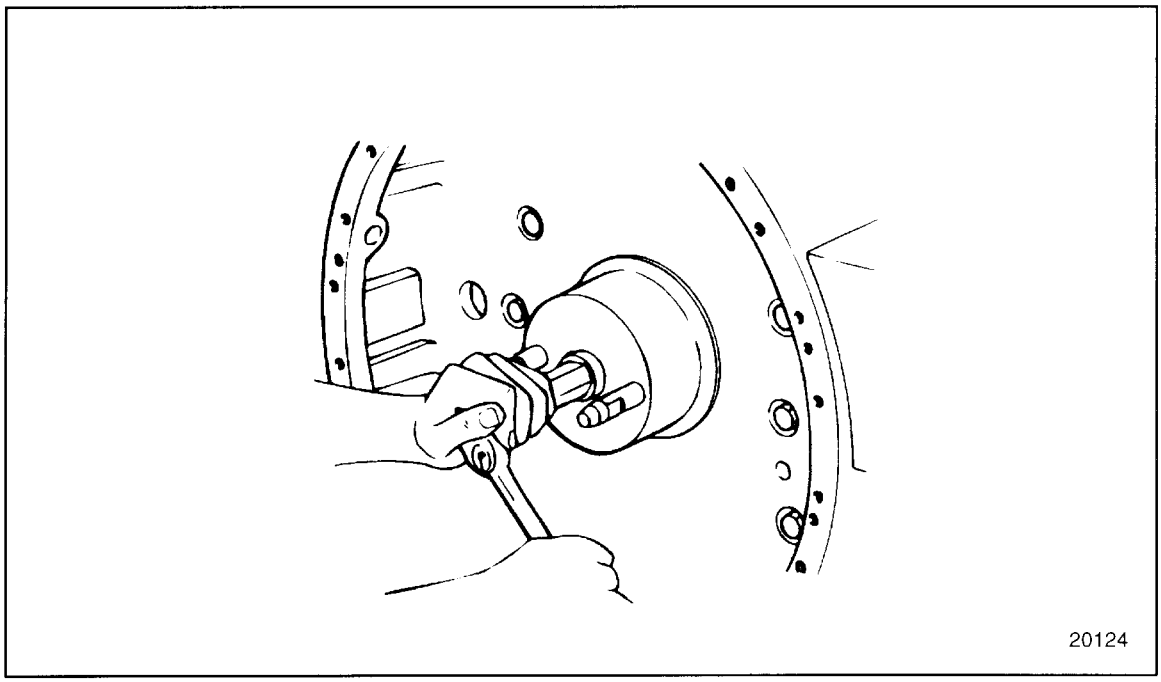

Figure 1-148 Oil Seal and Sleeve Installation

6. When the inside surface of the housing is seated against the base (spacers on rear oil seal installation), the seal and sleeve are properly positioned and installed.

 Copyright © 2004 DETROIT DIESEL CORPORATION

1.9 CRANKSHAFT MAIN BEARINGS

The crankshaft main bearing shells are precision made and are replaceable without machining. They consist of an upper bearing shell seated in each cylinder block main bearing support and a lower bearing shell seated in each main bearing cap. See Figure 1-149.

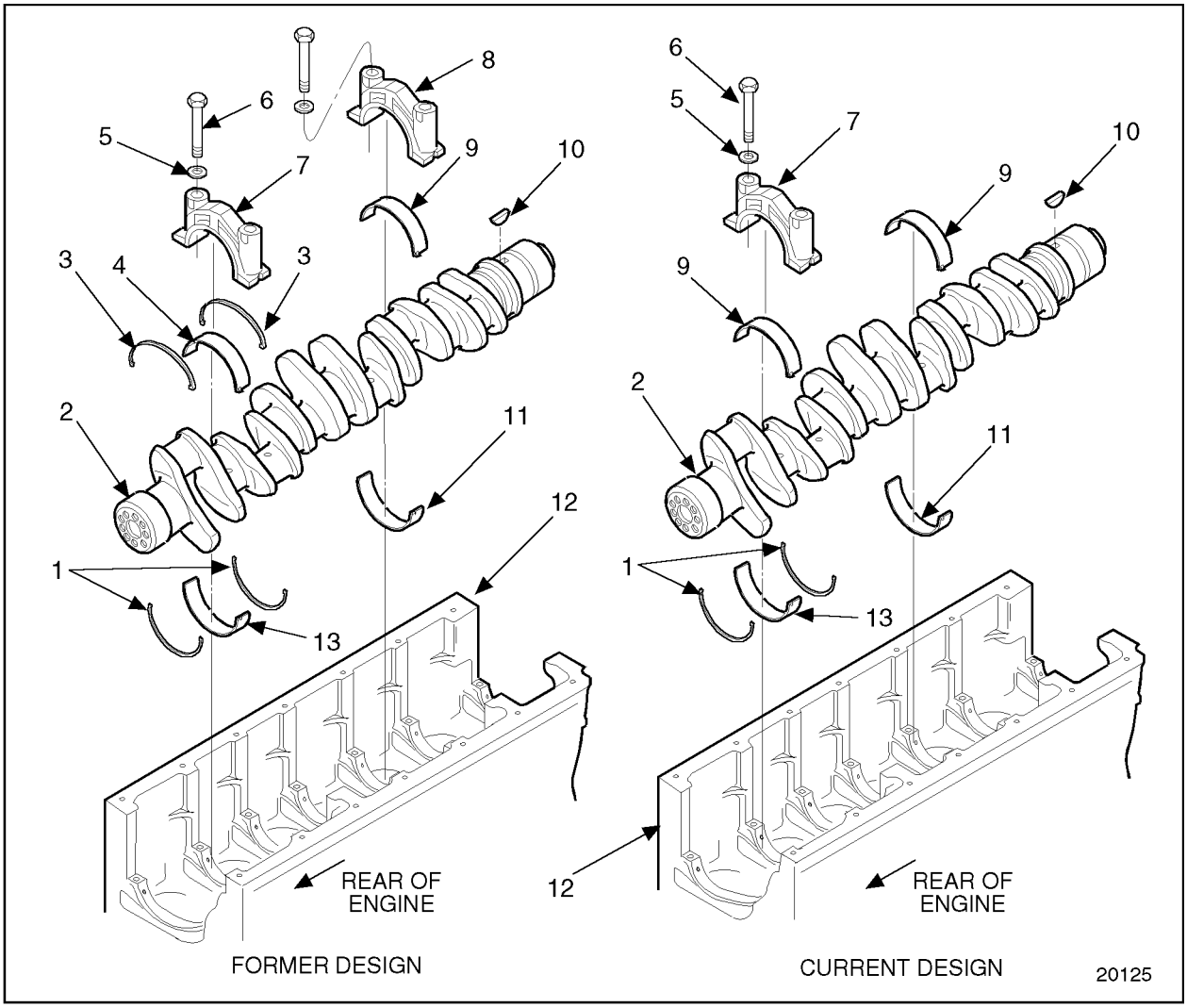

1. Upper No. 6 Thrust Washers
2. Crankshaft
3. Lower No. 6 Thrust Washers
4. Lower No. 6 Thrust Bearing Shell
5. Washer
6. Bolt
7. No. 6 Main Cap
8. Main Cap No. 1, 2, 3, 4, 5 & 7
9. Lower Thrust Bearing Shell
10. Woodruff Key
11. Upper Thrust Bearing Shell No. 1, 2, 3, 4, 5 & 7
12. Cylinder Block
13. Upper No. 6 Thrust Bearing Shell

Figure 1-149 Main Bearing Caps, Bearing Shells and Crankshaft Thrust Washers

(Rev. 2004) *All information subject to change without notice.*
6SE483 0401 Copyright © 2004 DETROIT DIESEL CORPORATION

The upper and lower bearing shells are located in the respective block and bearing cap by a tang. The tang is located at the parting line at one end of each bearing shell. The tangs are offset from center to aid correct insertion. Bearing shell sets are supplied as a matched assembly and should not be mixed.

A hole in each upper bearing shell registers with a vertical oil passage in the cylinder block. Lubricating oil, under pressure, passes from the cylinder block oil gallery by way of the bearing shells to the drilled passage in the crankshaft, then to the connecting rods and connecting rod bearings. The upper bearing shell is also grooved.

The lower main bearing shells have no oil holes or grooves. Therefore, the upper and lower main bearing shells must not be interchanged.

 Copyright © 2004 DETROIT DIESEL CORPORATION

Thrust washers on each side of the No. 6 main bearing absorb the crankshaft thrust. The two-piece washers utilize locking tangs that register with locating notches in the bearing shell. See Figure 1-150.

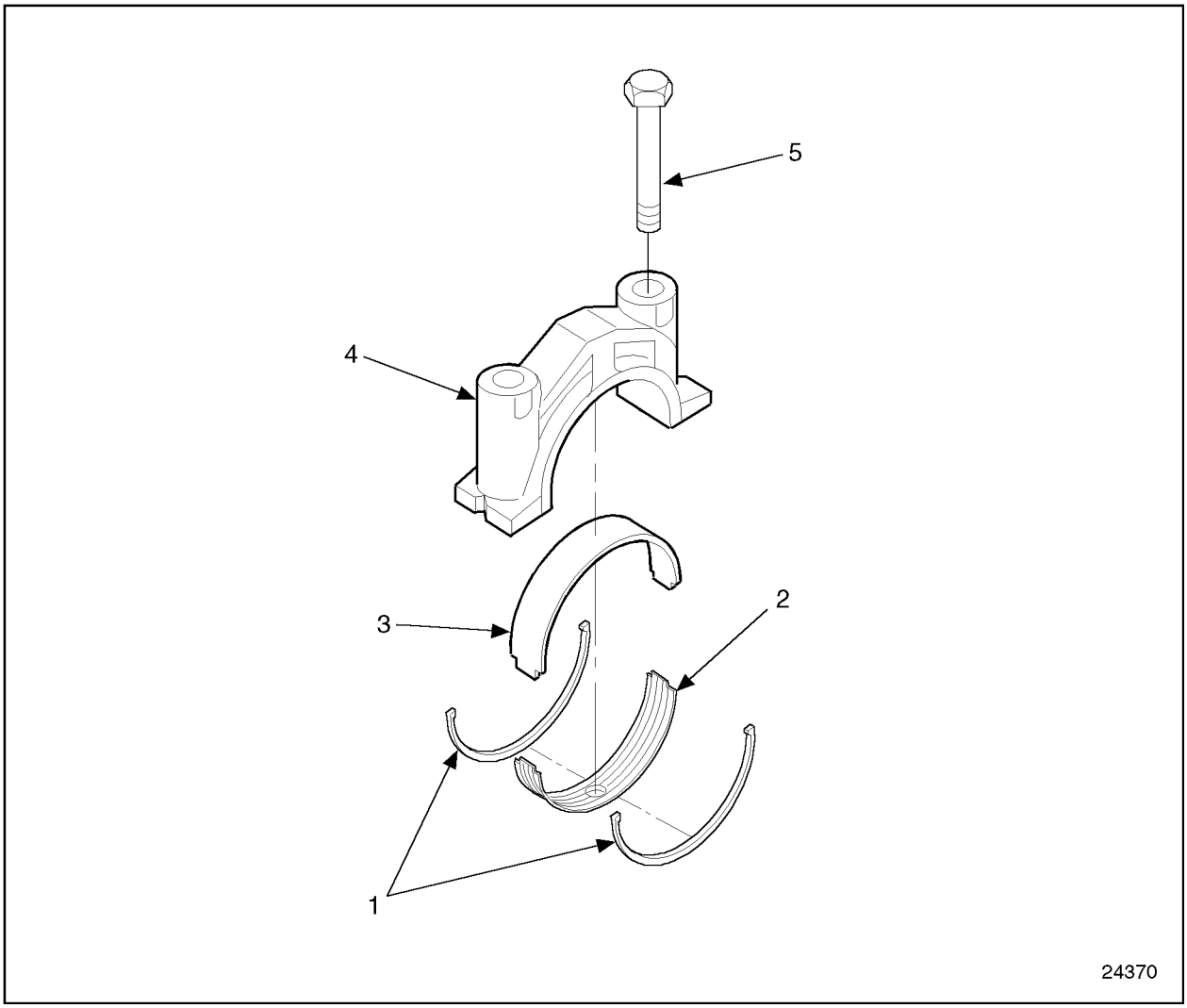

1. Upper Thrust Washer (2)
2. Upper No. 6 Bearing Shell
3. Lower No. 6 Bearing Shell
4. No. 6 Main Bearing Cap
5. Bolt

Figure 1-150 No. 6 Thrust Bearing Detail

The condition of the lower bearing shells may be observed by removing the main bearing caps.

(Rev. 2004) *All information subject to change without notice.*
6SE483 0401 Copyright © 2004 DETROIT DIESEL CORPORATION

1.9.1 Repair or Replacement of Crankshaft Main Bearings

To determine if repair is possible or replacement is necessary, perform the following procedure. See Figure 1-151.

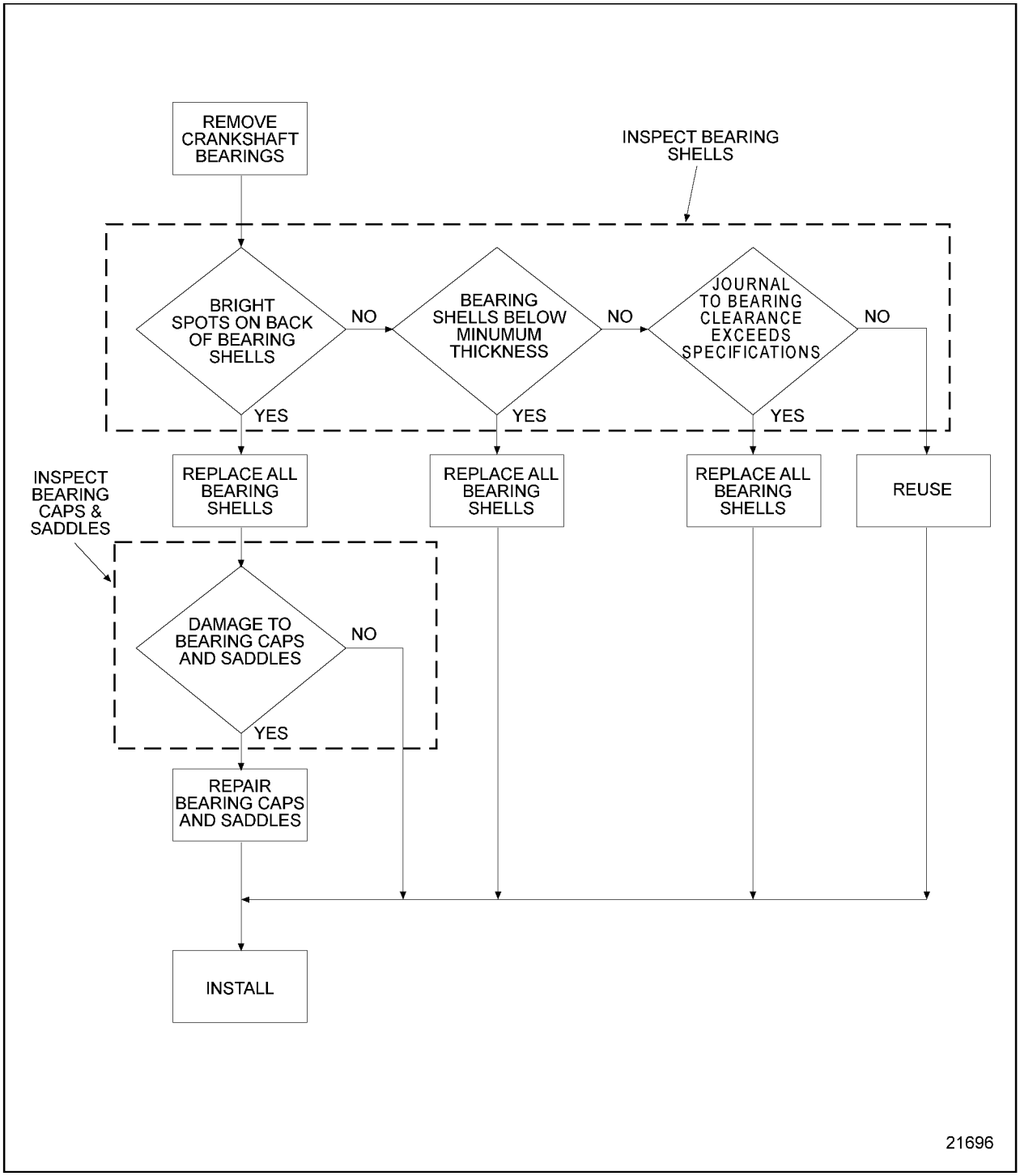

Figure 1-151 Flowchart for Repair or Replacement of Crankshaft Main Bearings

 Copyright © 2004 DETROIT DIESEL CORPORATION

1.9.2 Removal of Main Bearing Shells

The main bearing caps are numbered consecutively, indicating their respective positions. When removed, the bearing caps (and the bearing shells, if they are to be reinstalled) must always be reinstalled in their original position.

1. Drain the oil pan, refer to section 13.13.1and remove the oil pan to expose the main bearing caps refer to section 3.11.2.
2. Remove the oil pump pickup and outlet pipes, and the oil pump. Refer to section 3.2.2.
3. Remove one bearing cap at a time and inspect the lower bearing shell. Refer to section 1.9.2.2.

NOTE:
If shims are used between the oil pump and the cylinder block, save the shims so that they can be reinstalled in exactly the same location as removed. The shims are used to adjust the crankshaft timing gear-to-oil pump drive gear lash.

4. To remove the upper main bearing shells without crankshaft removal, it will be necessary to use the main bearing shell remover and installer tool set, J 36187. See Figure 1-152.

NOTE:
Remove and reinstall both upper and lower bearing shells for each main journal being inspected before moving on to the next main journal. Never remove more than one main bearing cap at a time except for No. 6 and No. 7.

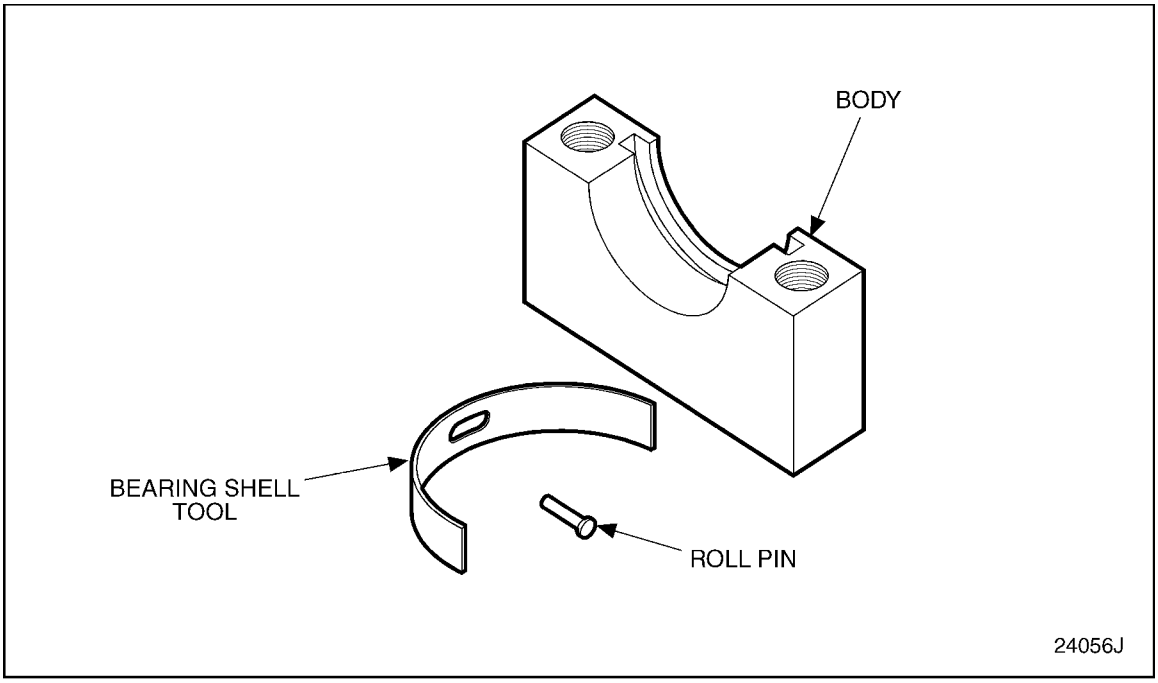

Figure 1-152 Main Bearing Shell Remover and Installer Tool Set

(Rev. 2004) *All information subject to change without notice.*
6SE483 0401 Copyright © 2004 DETROIT DIESEL CORPORATION

5. To bar the engine over, use the square hole in the middle of the crankshaft pulley, to position the crankshaft throw. Position the crankcase throw for the main bearing being worked on so that the oil delivery hole is pointing upward. See Figure 1-153.

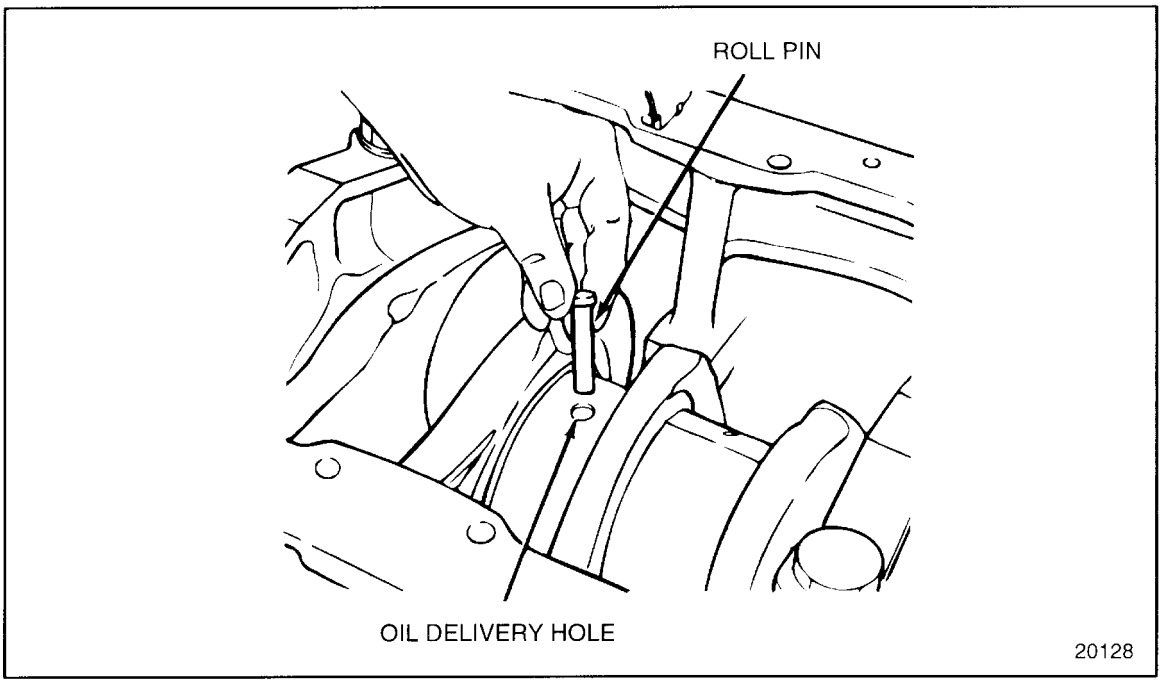

Figure 1-153 Roll Pin Hole Installation

 Copyright © 2004 DETROIT DIESEL CORPORATION

6. Install the roll pin to the oil delivery hole in the crankshaft journal. See Figure 1-153. If this operation is being performed in-frame, use petroleum jelly to retain the roll pin in the hole.
7. For the No. 6 main bearing journal, it will be necessary to install the lower main bearing thrust washers (previously removed) to the machined faces of the body from the tool kit. Stick the thrust washers to the main cap using petroleum jelly. Index the locating tangs on the thrust washers with the cutouts on the bearing shell. See Figure 1-154.

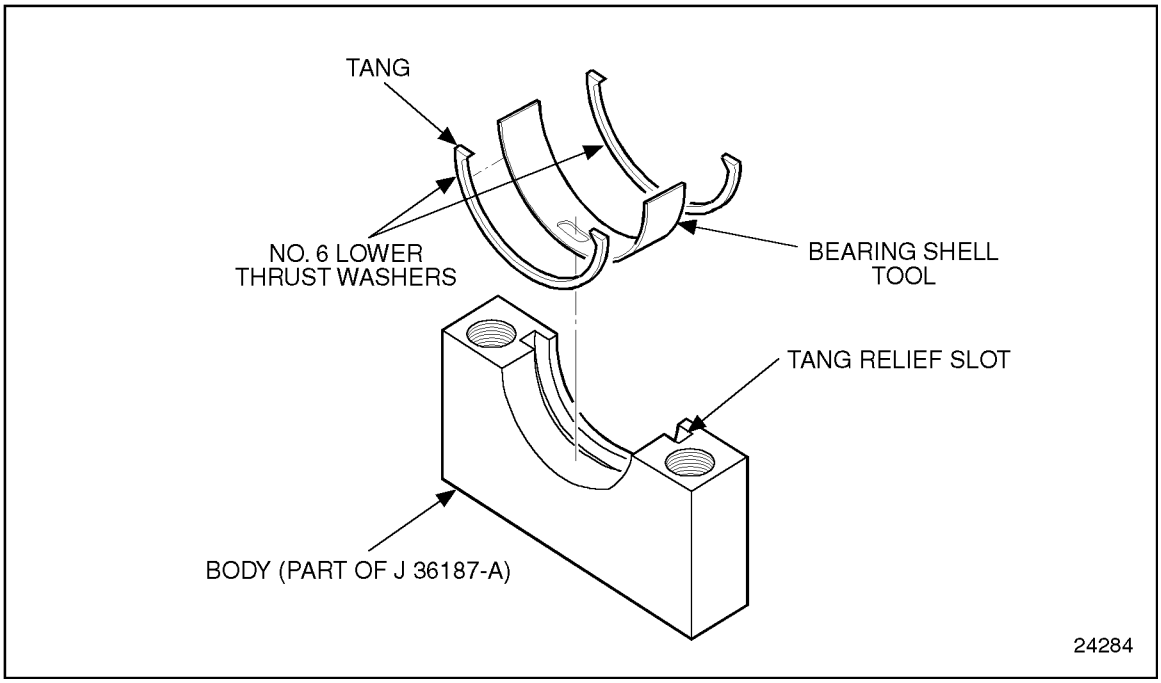

Figure 1-154 Upper Main Bearing Shell Removal-Tool Set-Up

(Rev. 2004) *All information subject to change without notice.*
6SE483 0401 Copyright © 2004 DETROIT DIESEL CORPORATION

8. Using the main bearing cap bolts and washer removed from the engine, install the assembled main bearing cap remover and installer tool to the main bearing saddle being worked on. The word "Front" stamped on the tool must face the front of the engine. Be sure that the roll pin in the oil delivery hole registers with the cutout section of the bearing shell tool before tightening the main bearing cap bolts. See Figure 1-155.

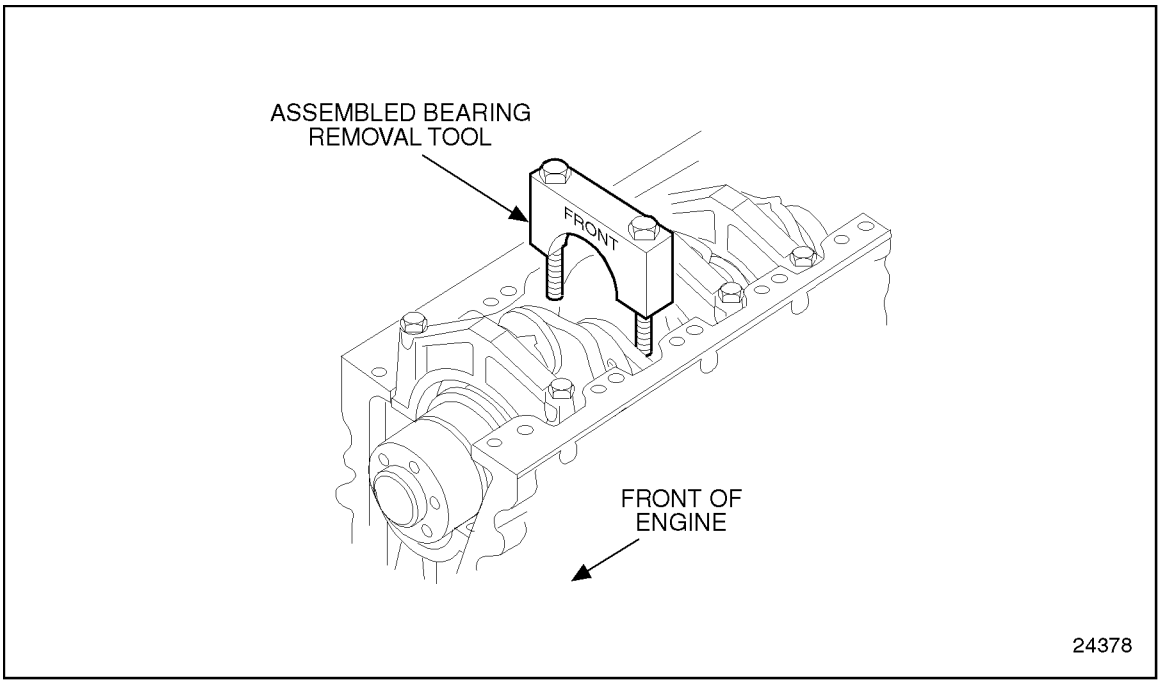

Figure 1-155 Upper Main Bearing Shell Remover Tool Installation

NOTE:
Only the No. 6 main bearing shell requires use of the thrust washers on the sides of the remover tool. For main bearings No. 1, 2, 3, 4, 5, and 7, it will not be necessary to install the thrust washers to the tool.

9. Torque the main bearing cap bolts until they are snug 13-27 N·m (10-20 lb·ft).
10. Using the square hole in the middle of the crankshaft pulley, bar the engine over in a clockwise direction when viewed from the front, approximately 180 degrees until the tang of the upper main bearing contacts the block. This will roll the bearing shell tool (and the thrust washers for No. 6 main bearing) into the upper main bearing saddle.

NOTE:
Keep all bearing shells and thrust washers segregated by number, so that they may be reinstalled exactly as removed if the bearing shells are reused. Shells and washers may be marked with a permanent marker or equivalent. Do not punch mark or otherwise disturb the surface of the shells and washers to mark them.

11. Remove the main bearing cap tool from the saddle.

 Copyright © 2004 DETROIT DIESEL CORPORATION

12. Remove the upper shell (and two thrust washers when working on No. 6 main) from the tool.
13. Inspect the bearing shells (and thrust washers for No. 6 main). Refer to section 1.9.2.2.
14. Install the upper main bearing to be used, in the main bearing installer and remover with the word "Front" facing the front of the engine. If the No. 6 main bearing is being done, install the thrust washers to the bearing. Refer to step 7 in this procedure.
15. Position the remover and installer with the bearings in the saddle being worked on and install the main bearing cap bolts and washers. Torque the bolts until they are snug 13-27 N·m (10-20 lb·ft).
16. Using the square hole in the crankshaft pulley, bar the engine over slowly, in a counterclockwise direction, approximately 180 degrees until the bearing split line is even with the cap and block joint face. Care must be taken not to bar the engine over too far and damage the bearing tang.
17. Remove the bearing remover and installer assembly, J 36187.
18. Install the lower main bearing shell to be used, into the engine main bearing cap.

NOTE:
Thrust washers in the No. 6 main bearing cap are no longer required if the engine was built with them. They do not need to be reinstalled.

19. Coat the threads and underside of the heads of the main bearing cap bolts with International Compound #2®. Position the main bearing cap, with bearing(s) in place into the saddle and install the bolts and washers. Rap the main bearing caps sharply with a fiber mallet or plastic hammer to ensure the caps are fully seated. Torque the bolts to 470-530 N·m (347-391 lb·ft).
20. It will be necessary to reinstall the upper and lower main bearing shells (and the upper thrust washers for the No. 6 main) and the main bearing cap, for the bearings being inspected or replaced before proceeding to the next main bearing saddle. Refer to section 1.9.3.
21. Repeat this procedure for each main bearing saddle until all seven sets of main bearings have been removed and inspected or replaced.

NOTE:
No. 7 main bearing journal does not have an oil hole, so the bearing remover cannot be used at that position. The No. 7 upper main bearing should be removed with both No. 6 and No. 7 main bearing caps off. Using a suitable tool, push on the No. 7 upper bearing on the side opposite the tang and dislodge the bearing tang from the tang slot in the cylinder block. Carefully push and pull the bearing the rest of the way out, taking care not to damage the bearing shell. Rotate the crankshaft, and apply some pressure to the side of the bearing while rotating.

22. After removal, clean the bearings.

(Rev. 2004) *All information subject to change without notice.*
6SE483 0401 Copyright © 2004 DETROIT DIESEL CORPORATION

1.9.2.1 Cleaning of Main Bearings

Perform the following to clean the main bearing:

1. Immerse the bearing in cleaning agent.

CAUTION:

To avoid injury from flying debris when using compressed air, wear adequate eye protection (face shield or safety goggles) and do not exceed 40 psi (276 kPa) air pressure.

2. Blow dry the main bearings with compressed air and inspect for damage and wear. Refer to section 1.9.2.2.

1.9.2.2 Inspection of Crankshaft Main Bearings

Bearing failures may result from deterioration (acid formation) or contamination of the oil or loss of oil. An analysis of the lubricating oil may be required to determine if corrosive acid and sulphur are present, which cause acid etching, flaking and pitting. Bearing seizure may be due to low oil or no oil.

Inspect the bearings for scoring, pitting, flaking, etching; or signs of overheating. The bearing overlay may develop minute cracks or small isolated cavities (checking) on the bearing surface during normal engine operation. These are characteristics of and are not detrimental to this type of bearing. They should not be replaced for these minor surface imperfections, since function of the bearings is in no way impaired and they will give many additional hours of trouble-free operation.

Inspect the backs of the bearing shells for bright spots, which indicate they have been moving in the bearing caps. If such spots are present, discard the bearing shells, and inspect the bearing caps and upper bearing saddles.

 Copyright © 2004 DETROIT DIESEL CORPORATION

Measure the thickness of the bearing shells at a point, 90 degrees from the parting line. See Figure 1-156.

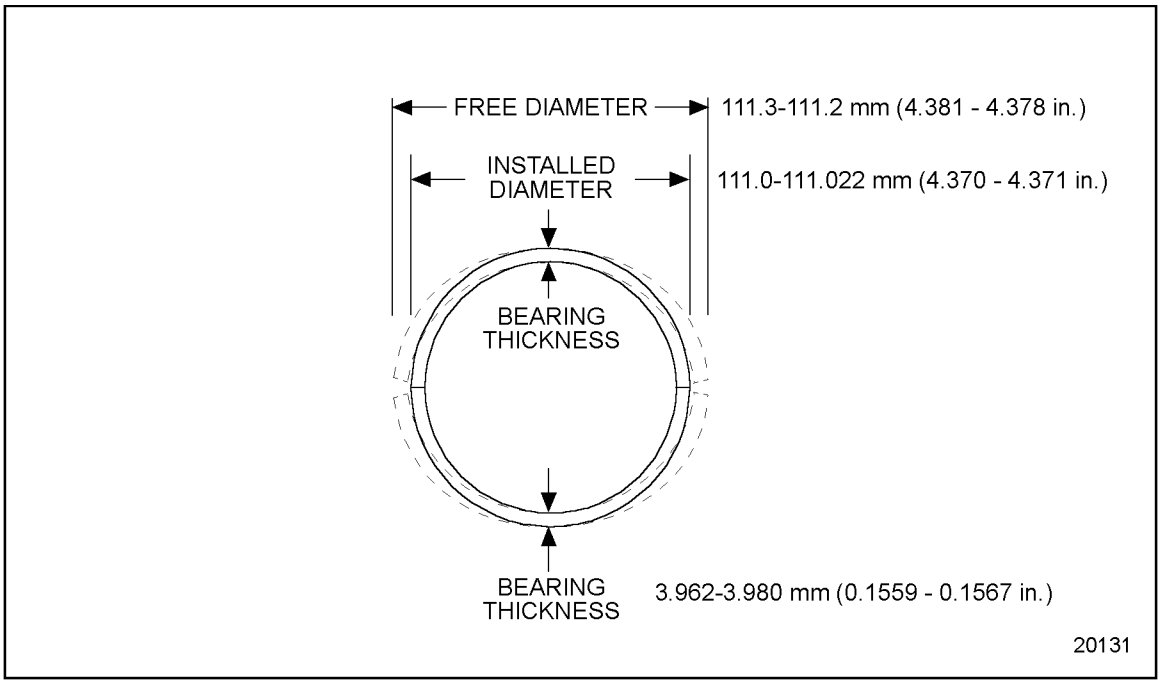

Figure 1-156 Main Bearing Measurements

Tool J 4757, placed between the bearing shell and a micrometer, will give an accurate measurement. The bearing shell thickness will be the total thickness of the steel ball in the tool and the bearing shell, less the diameter of the ball. This is the only practical method for measuring the bearing thickness, unless a special micrometer is available for this purpose. The minimum thickness of a worn standard main bearing shell is 3.937 mm (0.155 in.). If any of the bearing shells are thinner than this dimension, replace all of the bearing shells. A new standard bearing shell has a thickness of 3.962-3.980 mm (0.1560 -0.1567 in.). If any bearing shell shows wear through the overlay across the width of the shell, all bearing shells must be replaced.

In addition to the thickness measurement, check the clearance between the main bearings and the crankshaft journals. This clearance may be determined with the crankshaft in place by means of a soft plastic measuring strip that is squeezed between the journal and the bearing as described in "Checking Bearing Clearance". Refer to section ADDITIONAL INFORMATION1.A. With the crankshaft removed, measure the outside diameter of the crankshaft main bearing journals and the inside diameter of the main bearing shells when installed in place with the proper torque 470-530 N·m (347-391 lb·ft) torque on the bearing cap bolts. When installed, the bearing shells are 0.0254 mm (0.001 in.) larger in diameter at the parting line than 90 degrees from the parting line.

(Rev. 2004) *All information subject to change without notice.*
6SE483 0401 Copyright © 2004 DETROIT DIESEL CORPORATION

The bearing shells do not form a true circle out of the engine. When installed, the bearing shells have a squeeze fit in the main bearing bore and must be tight when the bearing cap is drawn down. This crush assures a tight, uniform contact between the bearing shell and bearing seat. Bearing shells that do not have sufficient crush will not have uniform contact, as shown by shiny spots on the back, and must be replaced. If the clearance between any crankshaft journal and its bearing shells exceeds 0.1524 mm (0.006 in.), all of the bearing shells must be discarded and replaced. This clearance is 0.040-0.127 mm (0.0016 -0.005 in.) with new parts.

If installing new replacement bearings, it is very important to thoroughly inspect the crankshaft journals. Also, damaged bearings may cause bending fatigue and resultant cracks in the crankshaft. Refer to section 1.7.2.11, and refer to section 1.7.2.9.

Do not replace one main bearing shell alone. If one bearing shell requires replacement, install all new upper and lower shells.

NOTE:
Anytime a new or reground crankshaft is used, all new bearing shells must be used.

Bearing shells are available in 0.254, 0.508 and 0.762 mm (approximately 0.010,.020 and 0.030 in.) undersize for service with reground crankshafts as listed in Table 1-12to determine what size bearings are required. Ensure the correct bearing to journal clearance is maintained when using these parts.

NOTE:
Bearing shells are NOT reworkable from one undersize to another undersize under any circumstances.

Inspect the crankshaft thrust washers. If the washers are discolored or worn excessively, or if the crankshaft end play is excessive, replace the thrust washers. Inspect the crankshaft thrust surfaces. Refer to section 1.7.2.1. If, after dressing or regrinding the thrust surfaces, new standard size thrust washers do not hold the crankshaft end play within the specified limits, it may be necessary to install oversize thrust washers on one or both sides of the No. 6 main bearing. A new standard size thrust washer is 3.56-3.48 mm (0.140 -0.137 in.) thick. Thrust washers are available in 0.127 and 0.254 mm (0.005 and 0.010 in.) oversize.

 Copyright © 2004 DETROIT DIESEL CORPORATION

1.9.3 Installation of Main Bearings Shells (Crankshaft Removed)

Install the main bearing shells as follows:

1. Check that all of the parts are clean and dry.
2. Apply clean engine oil 360° around each crankshaft main journal and install the upper main bearing shells to their respective saddles in the cylinder block. Note the locating tangs and be sure the oil holes register with the galleries in the cylinder block.
3. Be sure to install the drilled bearing shells in the cylinder block and the plain bearing shells in the bearing caps. The upper and lower main bearing shells are not alike; the upper shell is drilled for lubrication, the lower bearing shell is not. If they are not installed correctly, the oil flow to the bearings and to the upper end of the connecting rods will be blocked off. Used bearing shells must be reinstalled on the same journal from which they were removed.
4. Perform all of the steps under "Installation of Crankshaft." Refer to section 1.7.3.
   [a] Measure the main bearing clearances. Refer to section ADDITIONAL INFORMATION1.A, "Checking Bearing Clearances" in "Shop Notes".
5. Measure the crankshaft end play. The minimum and maximum specifications are listed in Table 1-23.
6. Toruqe all of the main bearing cap bolts to 470-530 N·m (347-391 lb·ft).
7. Measure the main bearing bores with dial bore gage, J 5347-B. The minimum specifications are listed in Table 1-17.

(Rev. 2004) *All information subject to change without notice.*
6SE483 0401 Copyright © 2004 DETROIT DIESEL CORPORATION

1.10 GEAR CASE COVER

The gear case cover and gear case housing bolt together at the front of the engine to form a sealed compartment for the engine gear train. See Figure 1-157.

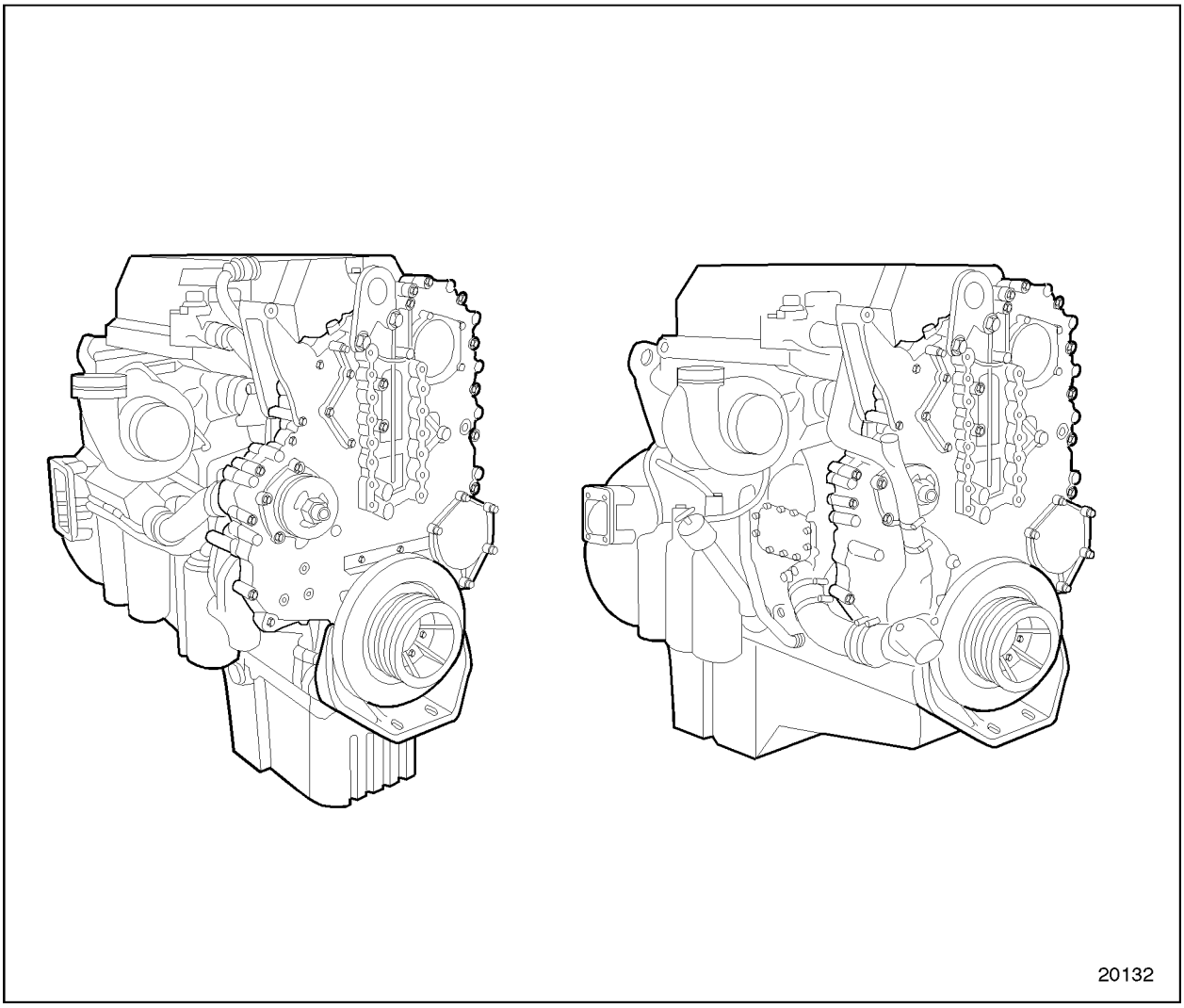

Figure 1-157 Engine Gear Case and Cover

For Series 60 2002 engines with EGR sytems see Figure 1-158

 Copyright © 2004 DETROIT DIESEL CORPORATION

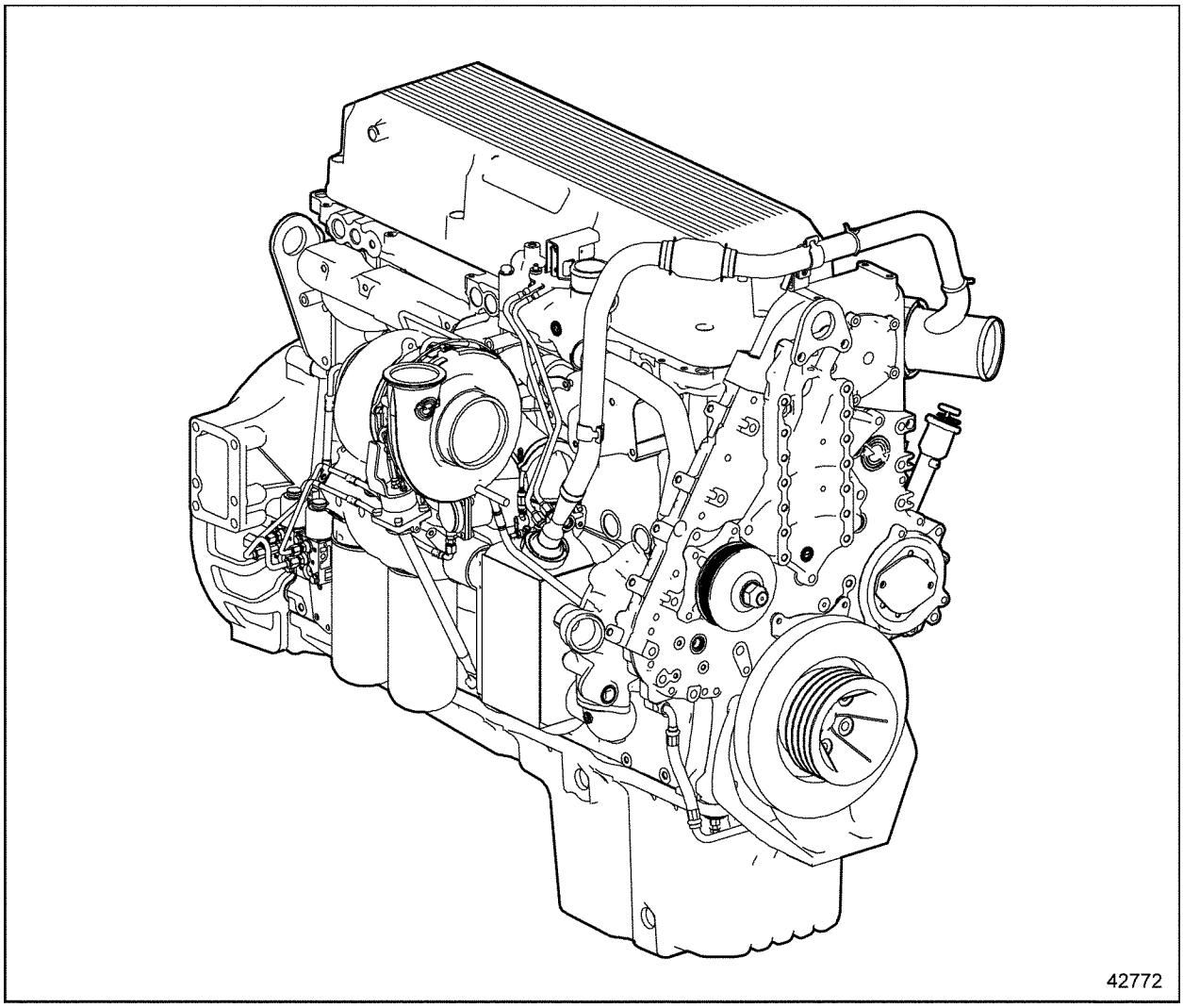

Figure 1-158 Engine Gear Case and Cover for Series 60 2002

(Rev. 2004) *All information subject to change without notice.*
6SE483 0401 Copyright © 2004 DETROIT DIESEL CORPORATION

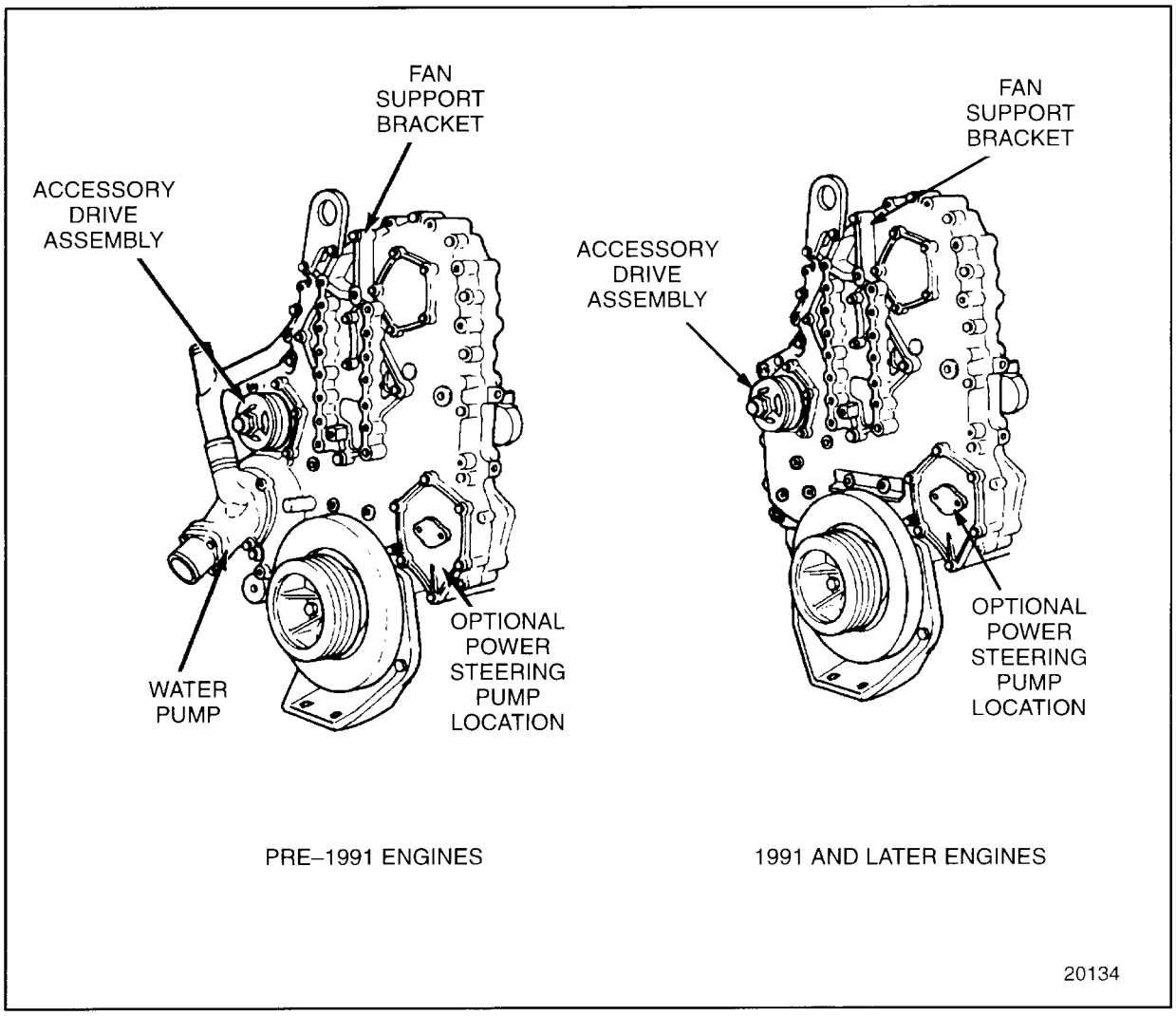

Figure 1-159 Gear Case Cover-mounted Components

 Copyright © 2004 DETROIT DIESEL CORPORATION

The gear case cover also serves as a retainer for the crankshaft front oil seal. See Figure 1-160.

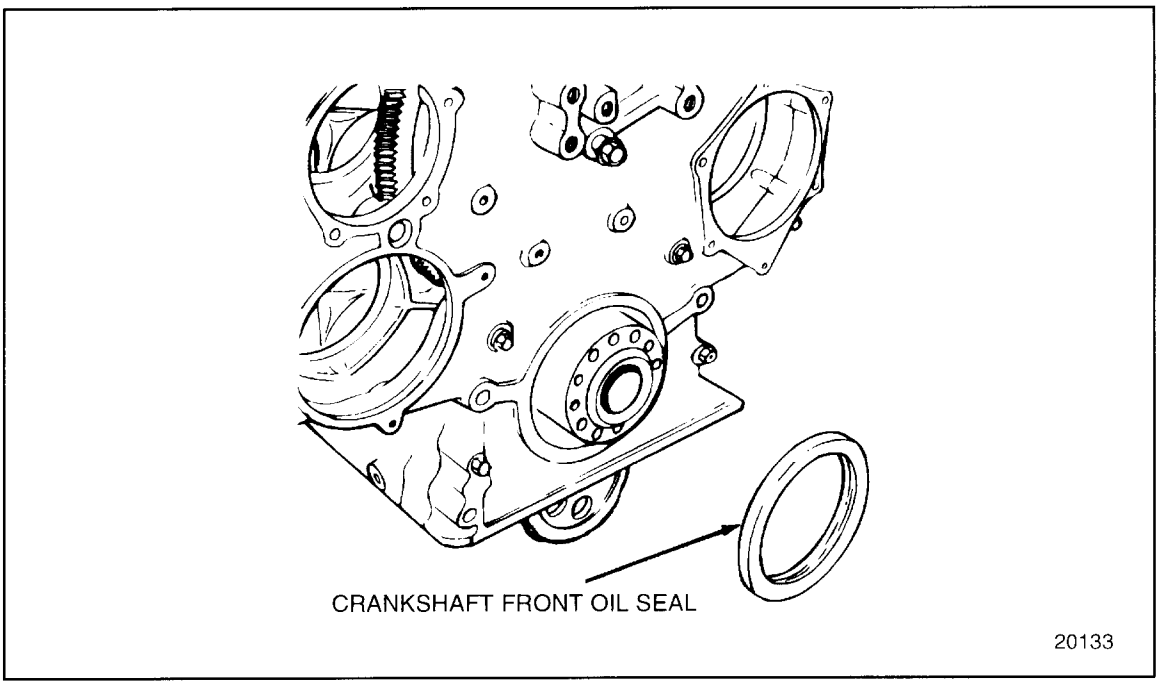

Figure 1-160 Crankshaft Front Oil Seal

(Rev. 2004) *All information subject to change without notice.*
6SE483 0401 Copyright © 2004 DETROIT DIESEL CORPORATION

Several components that are mounted to the gear case cover include the water pump (pre-1991 engines only), accessory drive assembly, and fan support bracket See Figure 1-161.

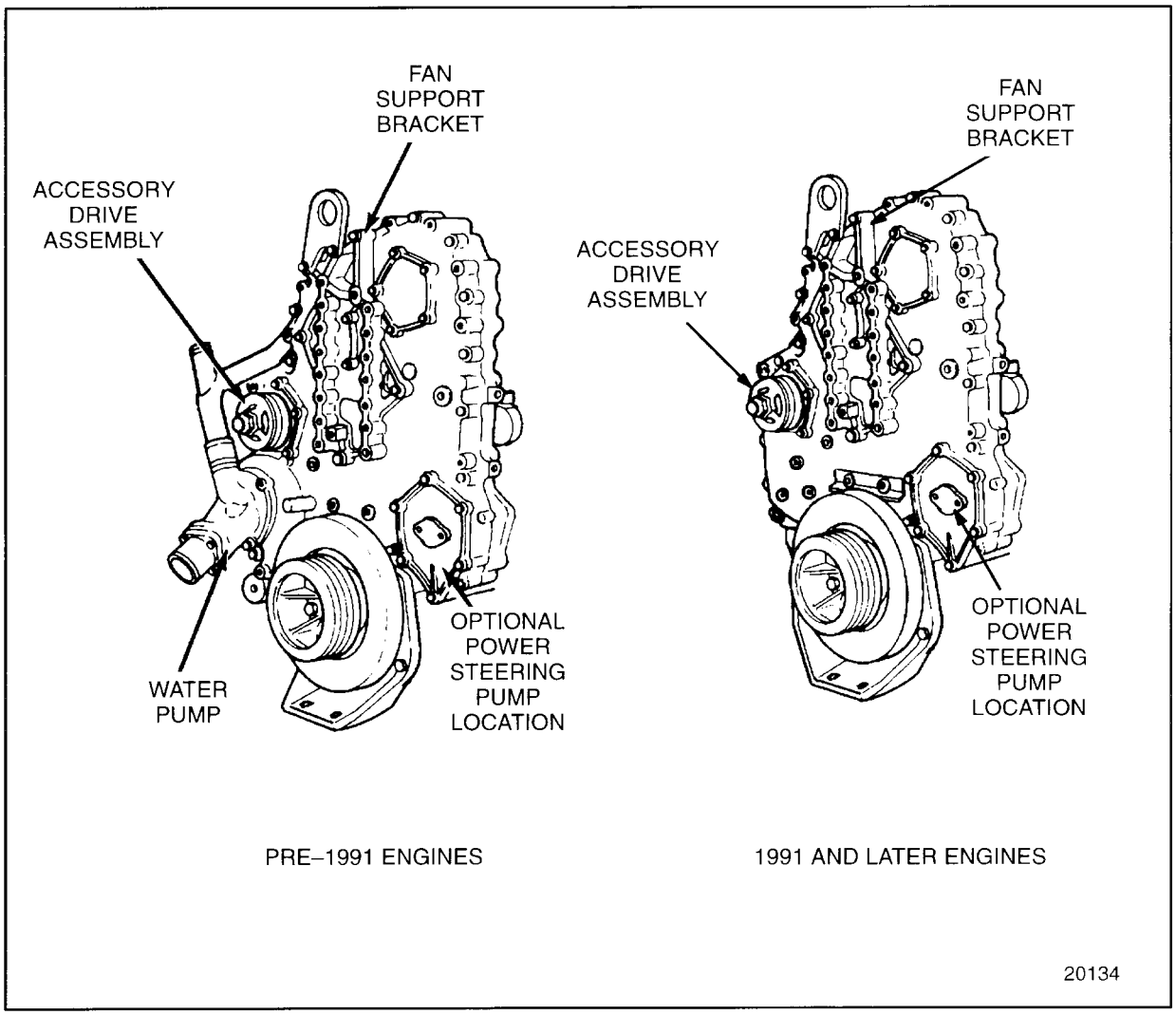

Figure 1-161 Gear Case Cover-mounted Components

 Copyright © 2004 DETROIT DIESEL CORPORATION

The front engine support is bolted to the front of the gear case cover, directly behind the crankshaft pulley and vibration damper. See Figure 1-162and see Figure 1-163.

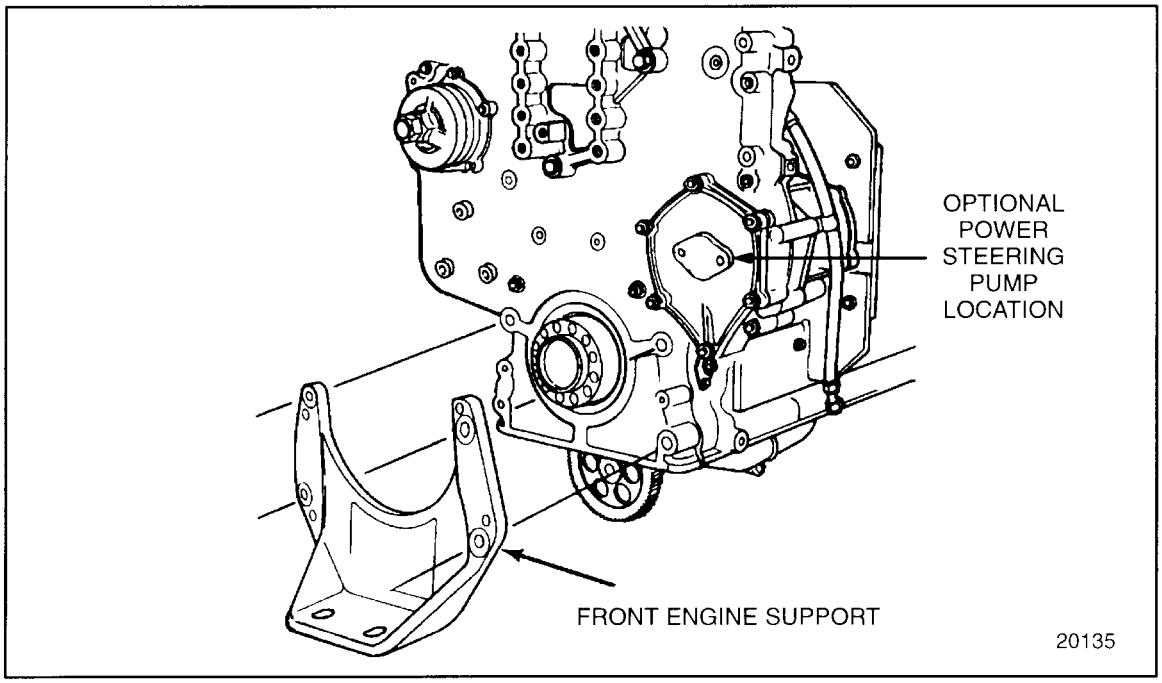

Figure 1-162 Typical Front Engine Support

(Rev. 2004) *All information subject to change without notice.*
6SE483 0401 Copyright © 2004 DETROIT DIESEL CORPORATION

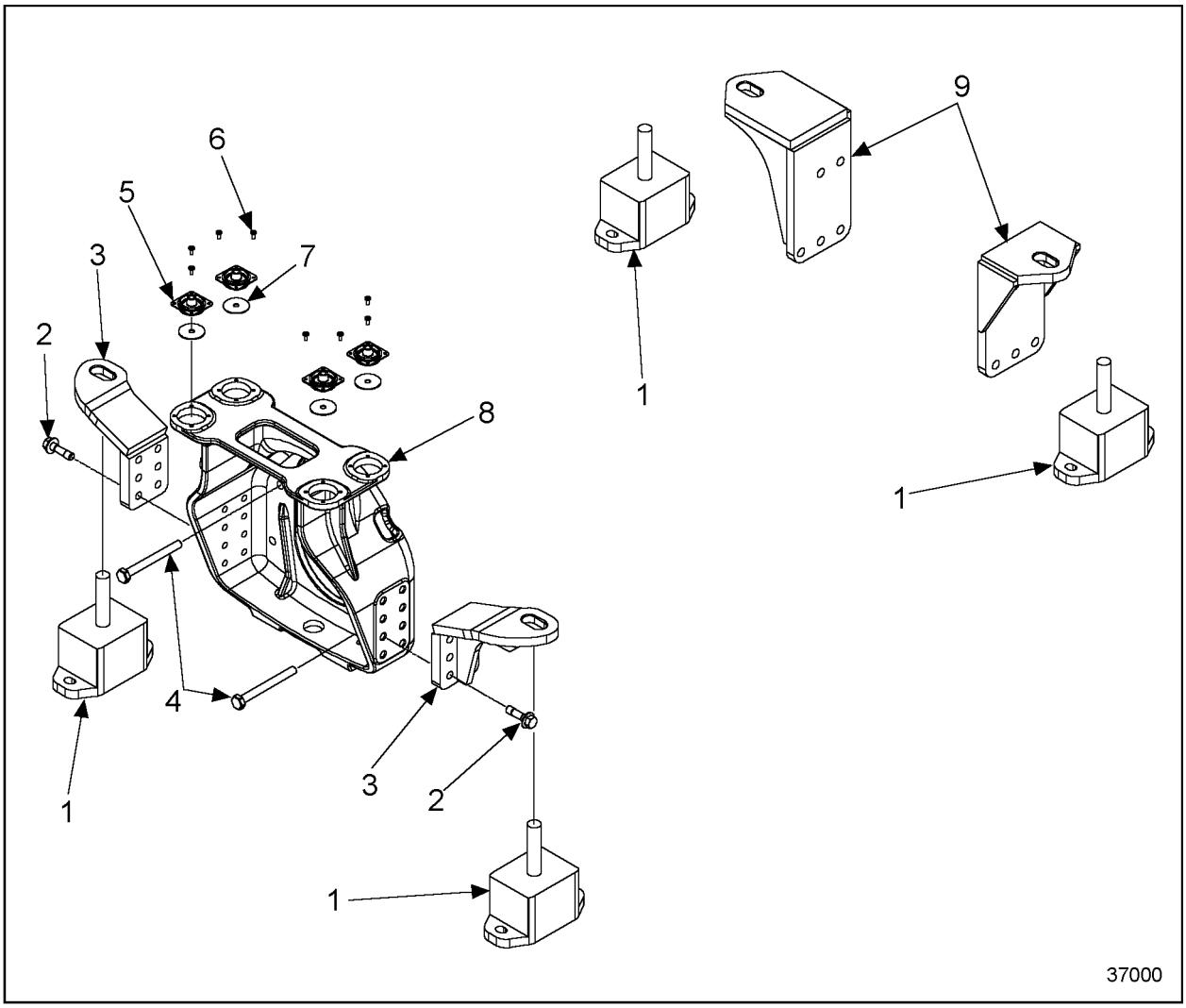

1. Bracket, Engine Mounting
2. Short Mounting Bracket
3. Front Heat Exchanger Support Mounting Bracket
4. Long Mounting Bolt
5. Isolator, Heat Exchanger
6. Screw, Isolator Mounting
7. Washer
8. Heat Exchanger Support
9. Bracket, Rear Engine Mounting

Figure 1-163 Typical Front Engine Support Heat Exchanger-Cooled Pleasure Craft Marine

Several access covers are provided on the gear case cover for service of the engine without removing the gear case cover. Removal of the camshaft drive gear access cover will allow the removal of the camshaft drive gear-to-camshaft bolt for camshaft and cylinder head removal without removing the gear case cover. See Figure 1-164.

 Copyright © 2004 DETROIT DIESEL CORPORATION

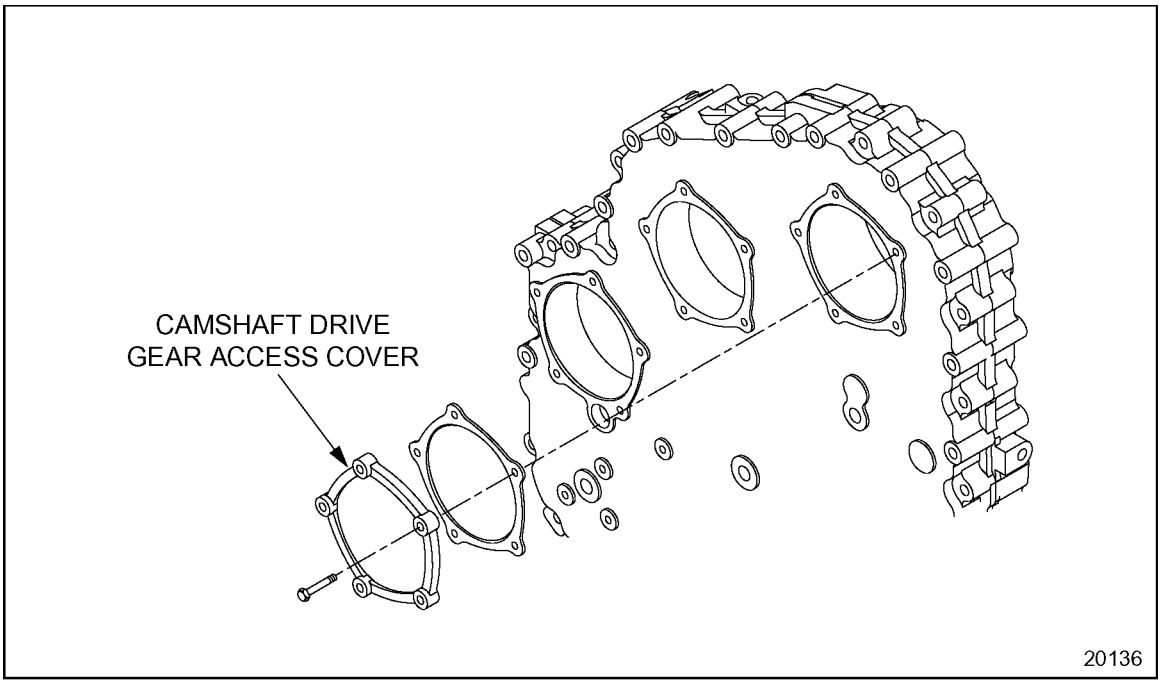

Figure 1-164 Camshaft Drive Gear Access Cover

The fan support bracket includes the access cover for the adjustable idler gear. See Figure 1-165.

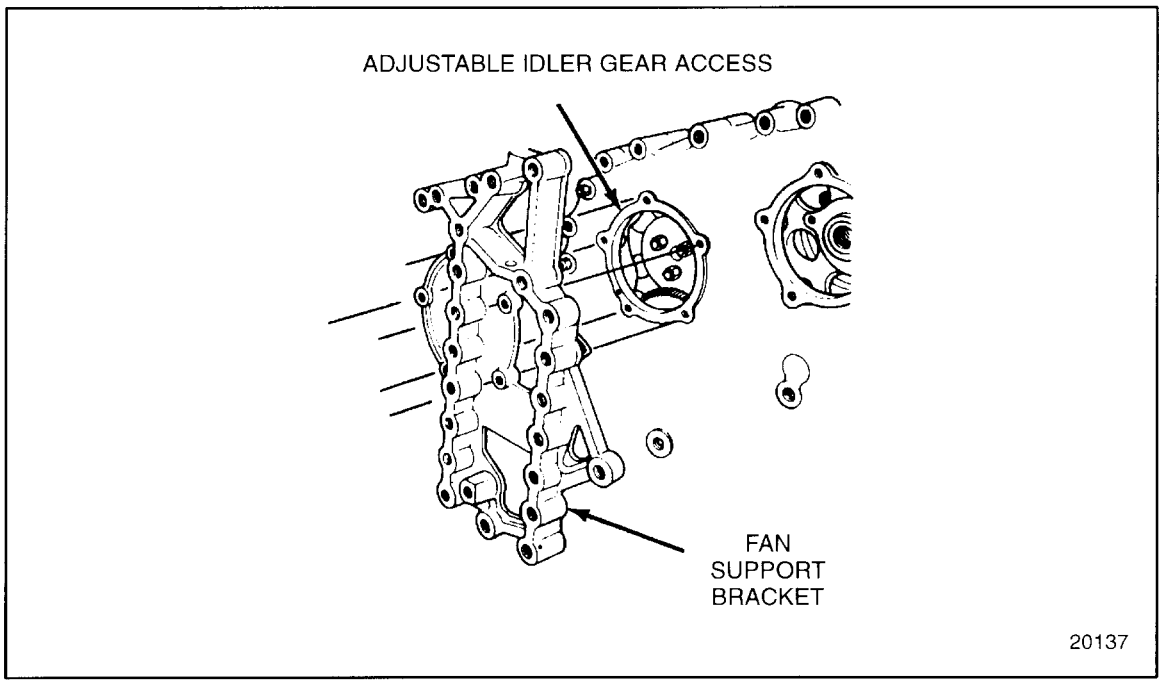

Figure 1-165 Fan Support Bracket

(Rev. 2004) *All information subject to change without notice.*
6SE483 0401 Copyright © 2004 DETROIT DIESEL CORPORATION

With the fan support bracket and the camshaft drive gear access cover removed, the gear lash between the adjustable idler gear and the camshaft drive gear can be measured and adjusted Refer to section 1.22.2.1.

On vehicles without power steering, an access cover is provided for inspection of the air compressor drive gear. See Figure 1-166.

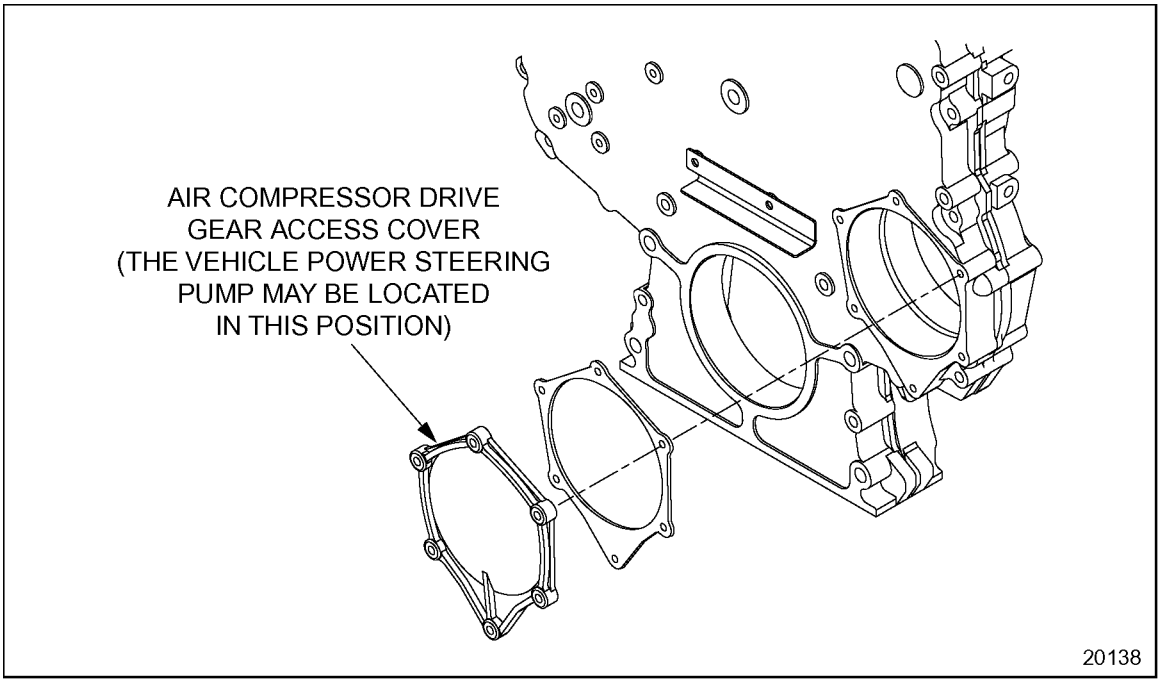

Figure 1-166 Air Compressor Drive Gear Access Cover

On some vehicles equipped with power steering, the power steering hydraulic pump is mounted to the gear case cover in the place of the access cover, and is driven by a short coupling that fits in the splined hole in the center of the air compressor drive gear. The pump is installed with a gasket.

 Copyright © 2004 DETROIT DIESEL CORPORATION

1.10.1 Repair or Replacement of Gear Case Cover

To determine if repair is possible or replacement is necessary, perform the following procedure. See Figure 1-167.

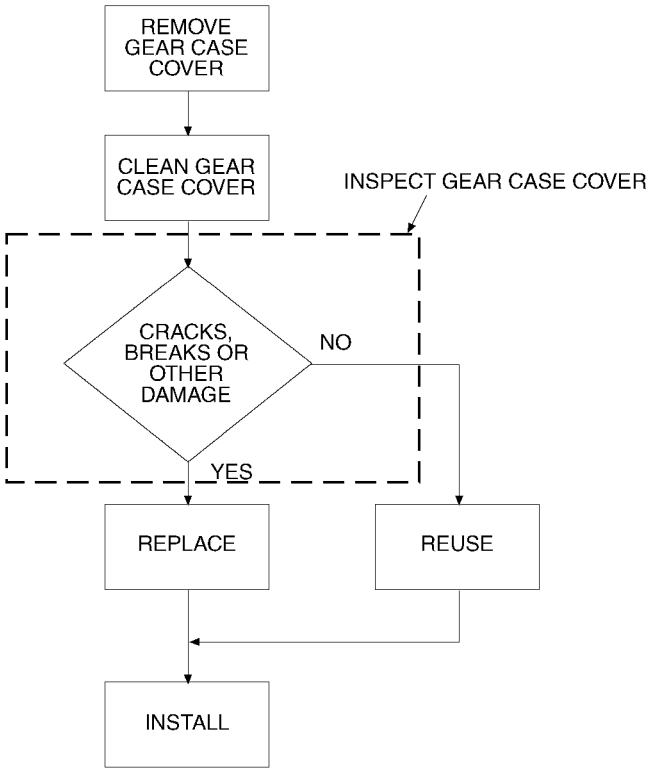

Figure 1-167 Flowchart for Repair or Replacement of Gear Case Cover

(Rev. 2004) *All information subject to change without notice.*
6SE483 0401 Copyright © 2004 DETROIT DIESEL CORPORATION

1.10.2 Removal of Engine Gear Case Cover

With the engine mounted on an overhaul stand. Remove the gear case cover as follows:

NOTICE:
Do not hit the face of the damper to loosen it. Damage to the internal components may result. The oil pan cannot be used to support the front of the engine in a vehicle, as its thermoplastic construction will not support the weight.

1. Drain the engine oil and remove the engine oil pan. Refer to section 13.13.1, for oil draining and refer to section 3.11.2.
2. Loosen the fan hub mounting bolts. Loosen the fan adjusting bolt. Back the adjuster off far enough to remove the drive belts. Remove the fan and fan hub assembly. Refer to section 4.7.2.
3. Loosen the alternator mounting bolts. Remove the alternator drive belts, alternator, and mounting brackets (if so equipped). Refer to section 8.2.2. See Figure 1-168.

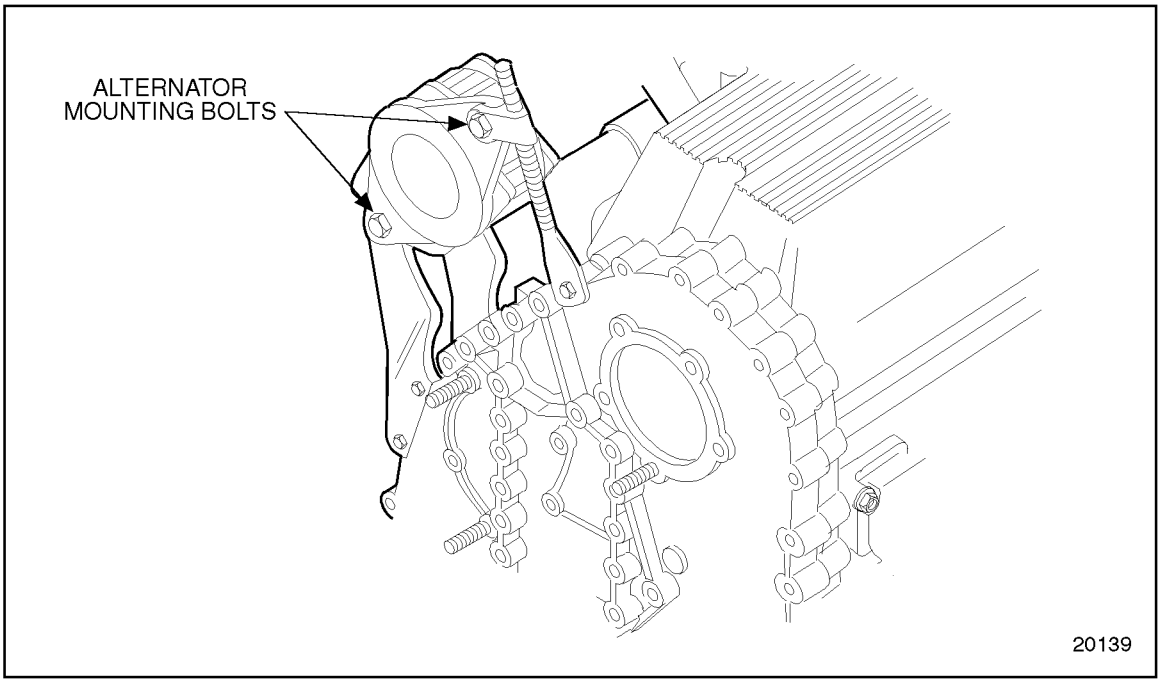

Figure 1-168 Alternator and Related Parts

4. Loosen the air conditioner compressor and mounting brackets (if so equipped). Refer to OEM guidelines.

 Copyright © 2004 DETROIT DIESEL CORPORATION

5. Remove the five fan support bolts. See Figure 1-169.

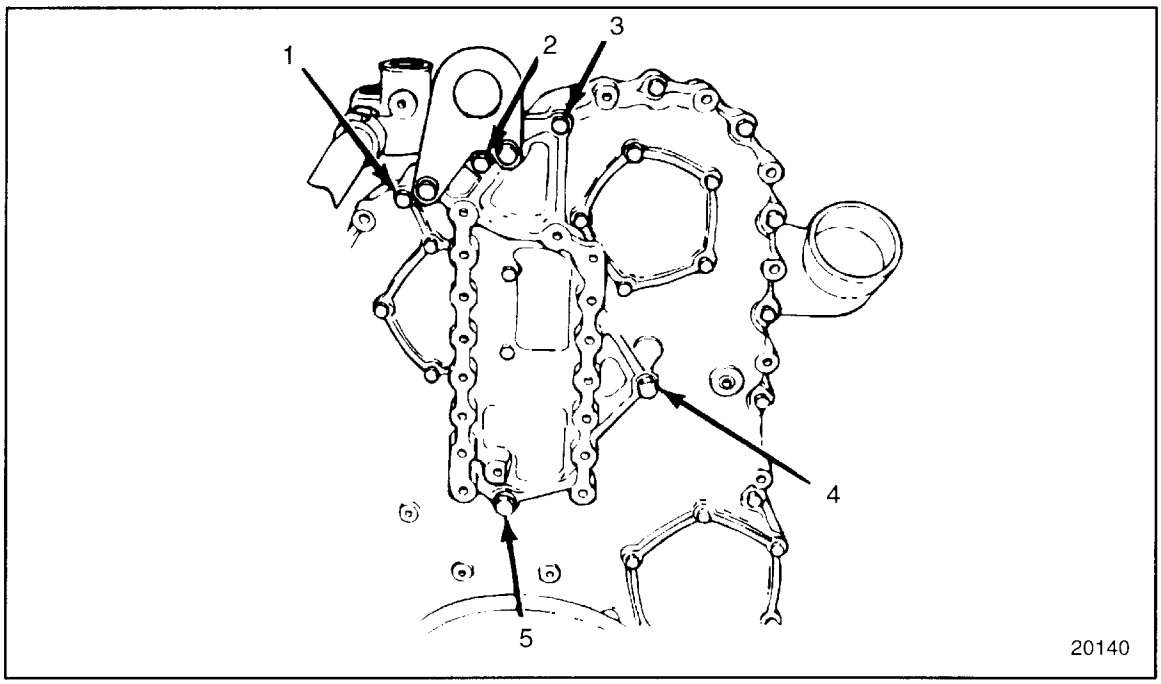

Figure 1-169 Fan Support Bolt Location

6. Remove the water pump assembly. Refer to section 4.3.2for front mounted water pump. Refer to section 4.2.2 for gear case mounted.
7. Remove the power steering pump (if so equipped). Refer to OEM guidelines.
8. Remove the crankshaft pulley. Refer to section 1.13.2.
9. Remove the vibration damper. Refer to section 1.12.2.
10. Remove the front engine mount by removing the four bolts securing the front engine mount to the gear case cover.

(Rev. 2004) *All information subject to change without notice.*
6SE483 0401 Copyright © 2004 DETROIT DIESEL CORPORATION

11. Loosen and remove the five bolts that secure the accessory drive assembly to the gear case cover. See Figure 1-170.

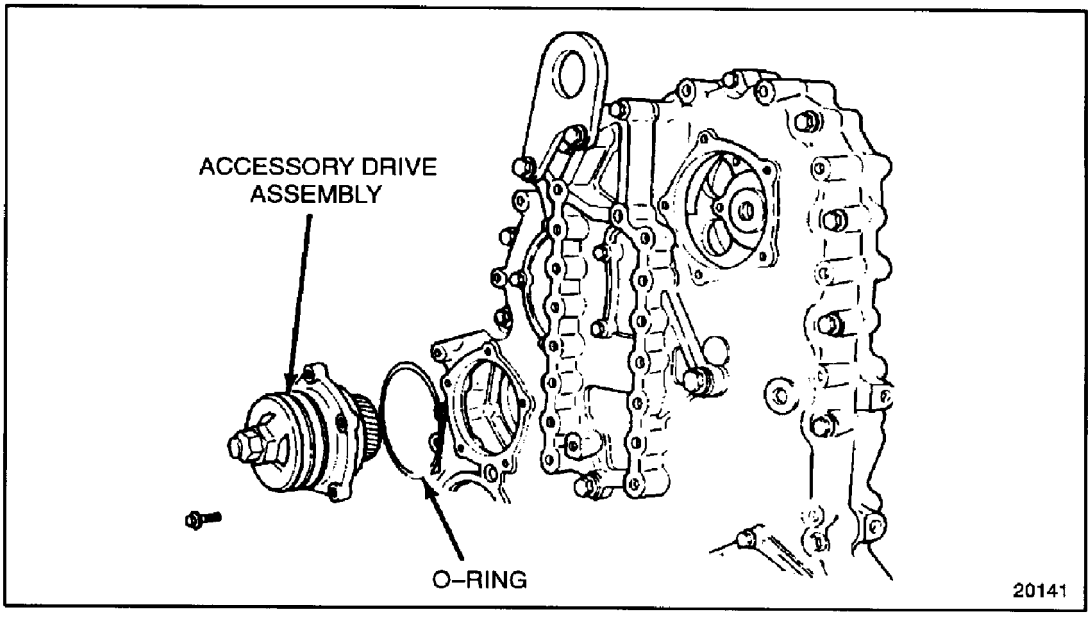

Figure 1-170 Accessory Drive Assembly

12. Remove the accessory drive assembly by pulling it straight out of the gear case cover to avoid damaging the rubber O-ring. See Figure 1-170.

 Copyright © 2004 DETROIT DIESEL CORPORATION

13. There are a total of 34 bolts that secure the gear case cover to the gear case. Bolts 17, 18, 19 and 20 were removed with the front engine mount. Bolts F1 through F5 were removed in a previous step; refer to step 12. Loosen and remove bolts 1 through 16, 21, 22 (see note).

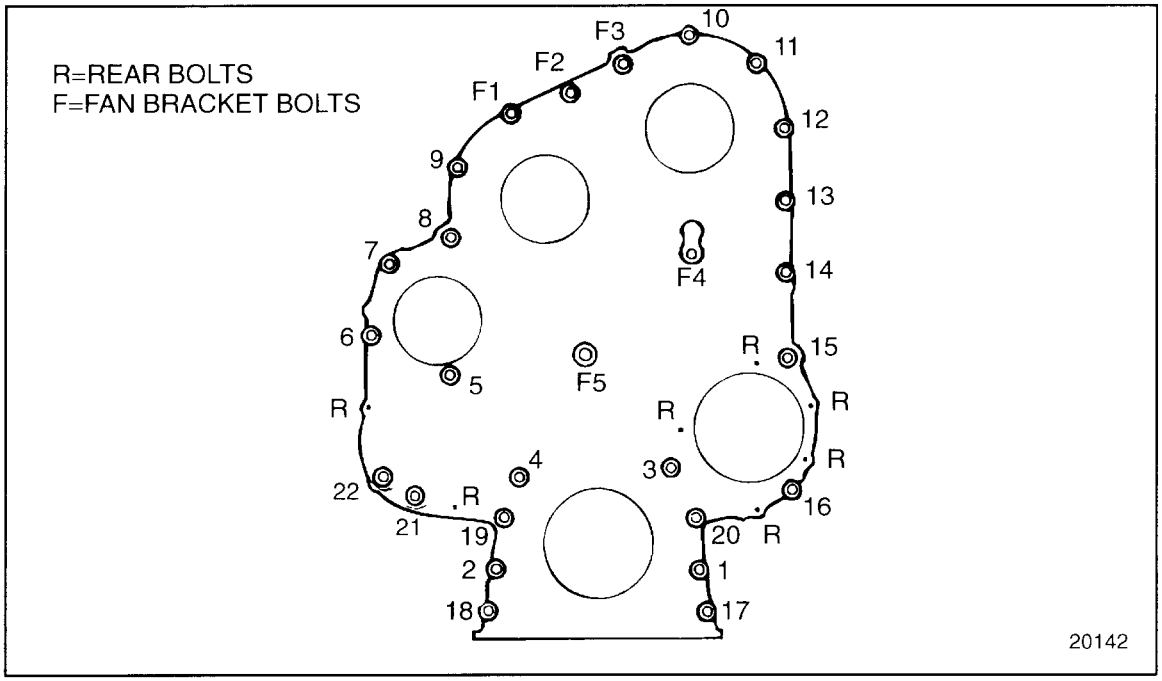

Figure 1-171 Gear Case Cover Bolt Arrangement (Front)

NOTE:
Bolts 21 and 22 are rear bolts on pre-1991 engines.

[a] Remove the SRS. Refer to section 2.32.2.

[b] Remove the air compressor drive assembly by removing the six bolts on the back of the gear case on the intake side of the engine located around the air compressor drive assembly. See Figure 1-172.

(Rev. 2004) *All information subject to change without notice.*
6SE483 0401 Copyright © 2004 DETROIT DIESEL CORPORATION

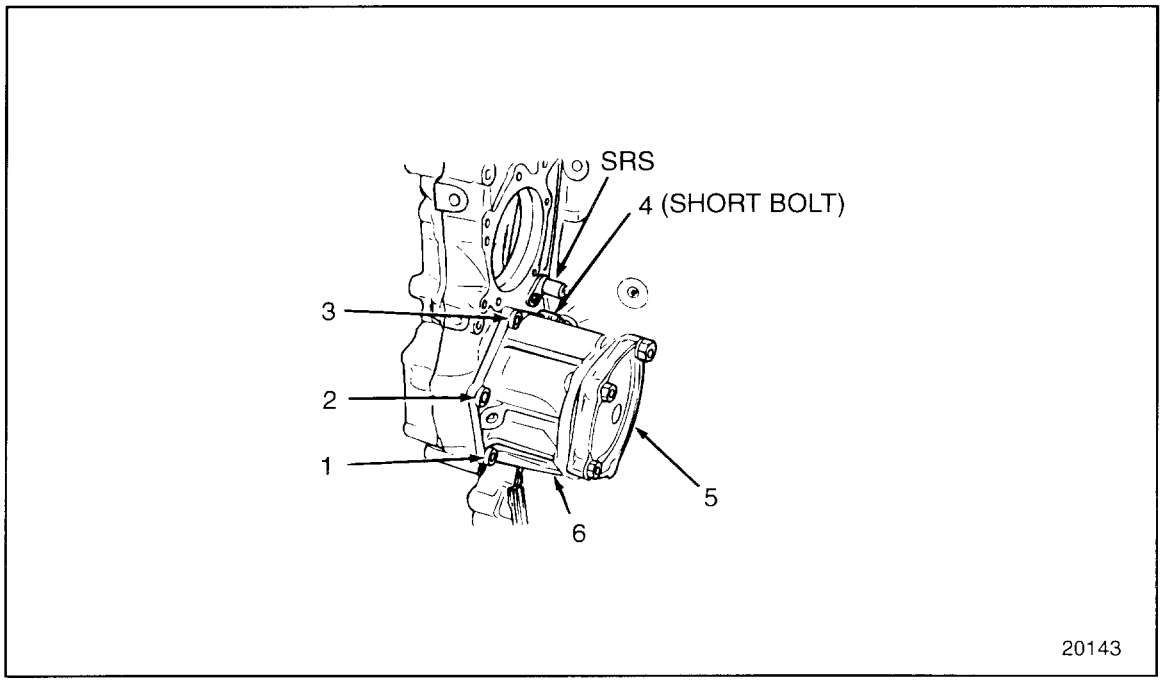

Figure 1-172 Gear Case Cover Bolt Arrangement (Left Rear)

[c] Remove the bolts on the back of the gear case on the water pump (right) side of the engine. See Figure 1-173.

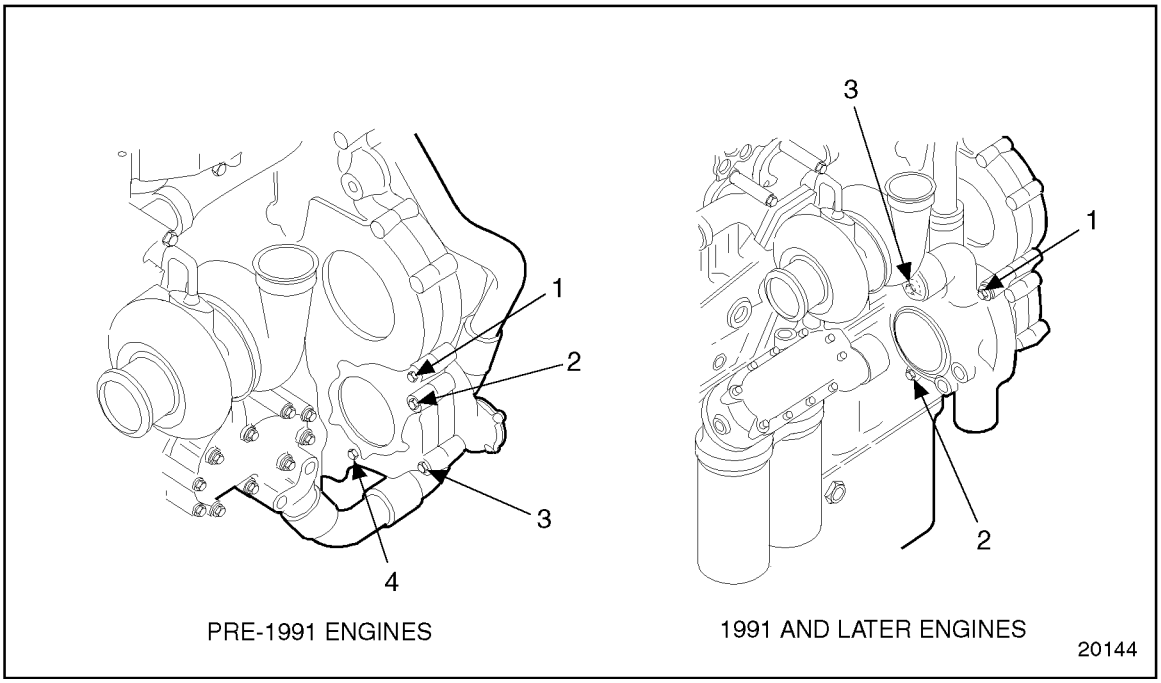

Figure 1-173 Gear Case Cover Bolt Arrangement (Right Rear)

For Series 60 2002 Engines remove gear case cover from gear case as follows:

 Copyright © 2004 DETROIT DIESEL CORPORATION

14. Remove Compact Gear Train Assembly. Refer to Section 1.23.
15. Remove 21 bolts securing Gear Case Cover from Gear case. See Figure 1-174

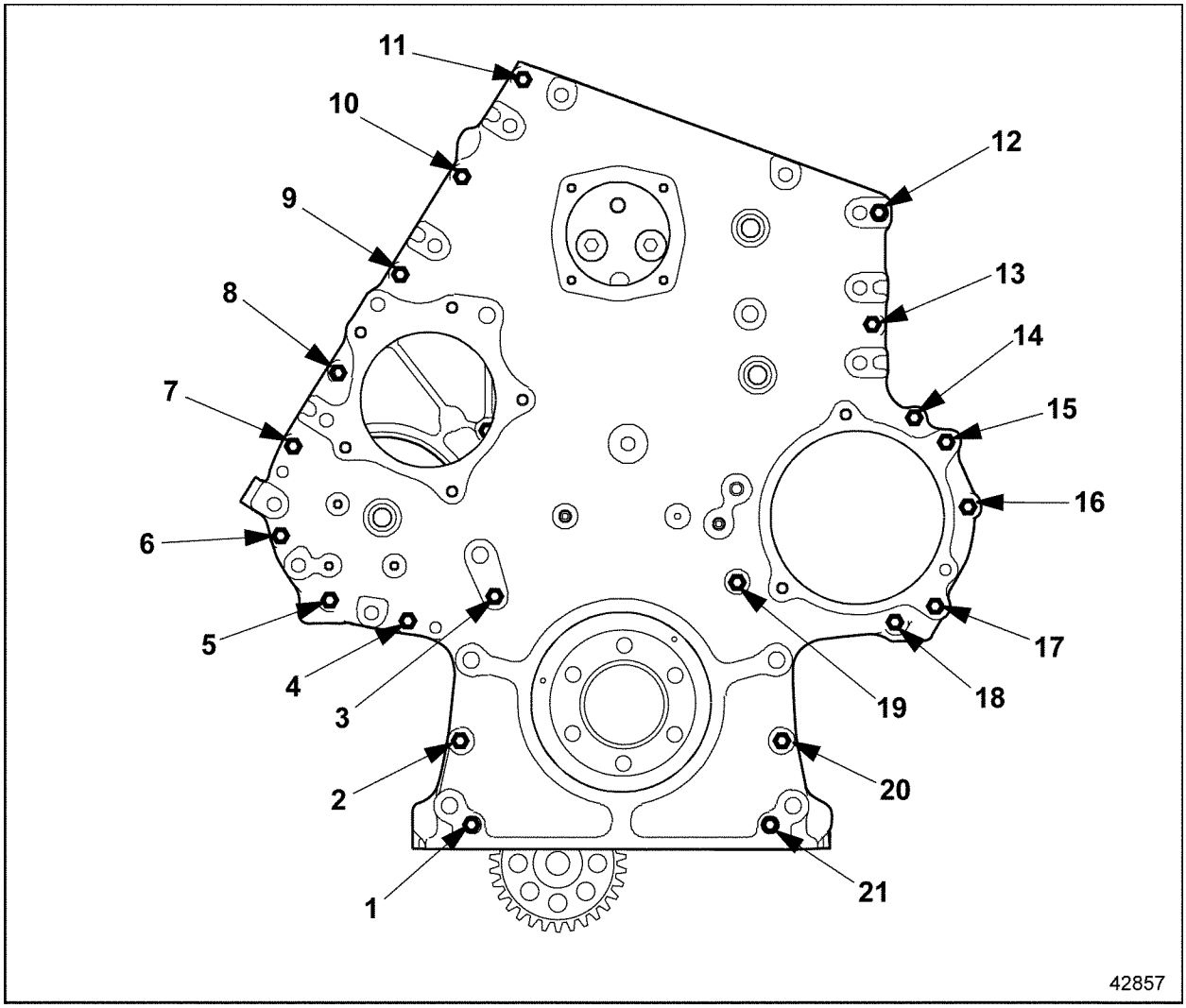

Figure 1-174 Gear Case Cover Bolt Location

(Rev. 2004) *All information subject to change without notice.*
6SE483 0401 Copyright © 2004 DETROIT DIESEL CORPORATION

16. Support the gear case cover with a suitable lifting device, using the front engine lift bracket. See Figure 1-175.

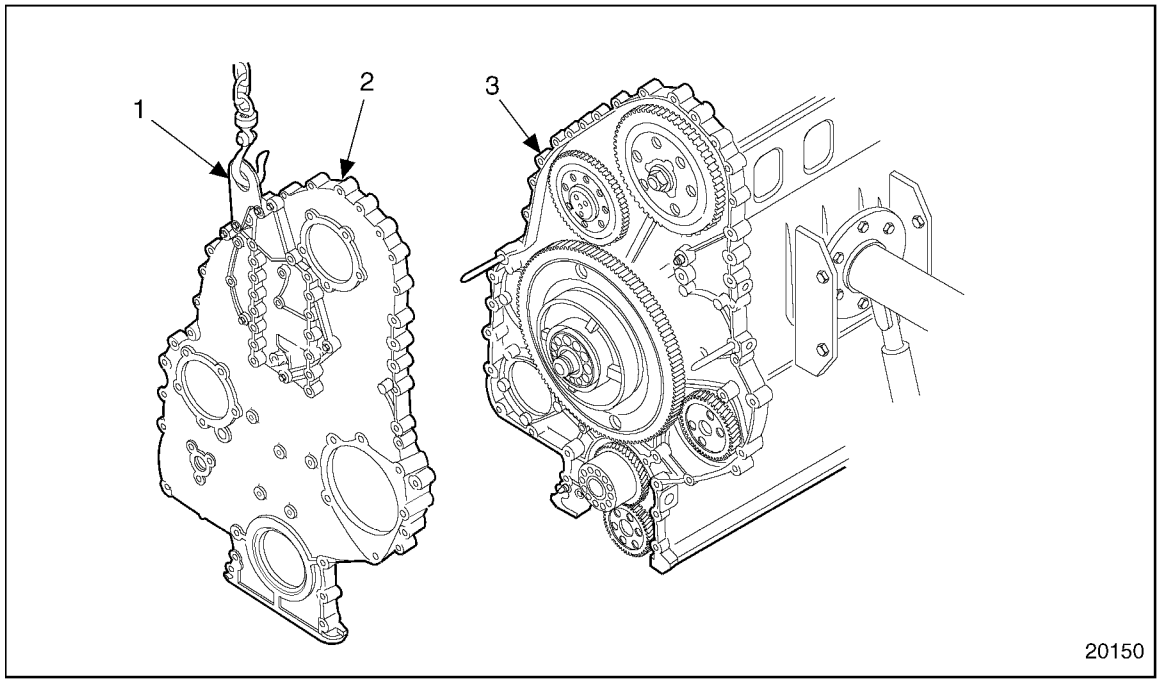

1. Engine Lifter Bracket
2. Gear Case Cover
3. Gear Case Housing

Figure 1-175 Engine Gear Case Cover Support

 Copyright © 2004 DETROIT DIESEL CORPORATION

NOTE:
There is a rubber O-ring installed between the center of the bull gear hub and the gear case cover. The O-ring may adhere to the cover when it is removed. Be sure the O-ring is not lost. See Figure 1-176.

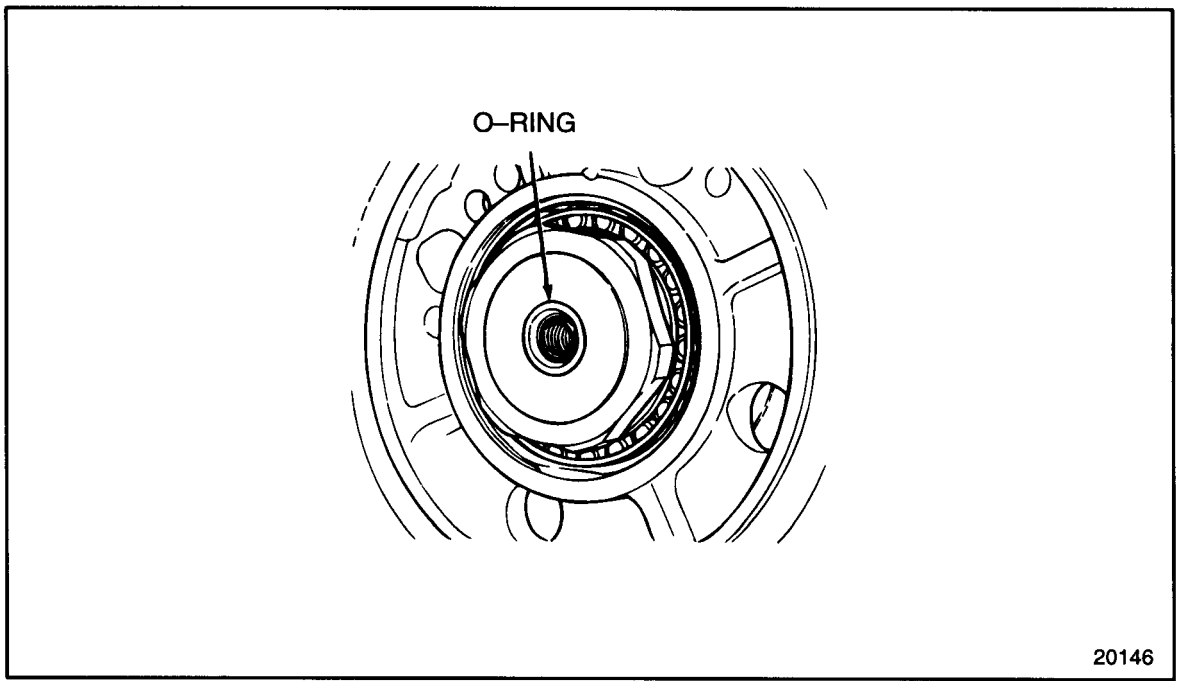

Figure 1-176 Bull Gear O-ring

17. Tap the gear case cover with a fiber mallet or plastic hammer to loosen it from the gear case. Remove the engine gear case cover.

(Rev. 2004) *All information subject to change without notice.*
6SE483 0401 Copyright © 2004 DETROIT DIESEL CORPORATION

1.10.2.1 Inspection of Gear Case Cover

Inspect the gear case cover as follows:

1. Clean all of the old gasket sealer from the mating surfaces of the gear case and gear case cover. Refer to General Information, "Cleaning".
2. Clean the gasket material from the mating surfaces of any components or access covers that were removed from the gear case cover, and the gear case cover itself.

CAUTION:

To avoid injury from flying debris when using compressed air, wear adequate eye protection (face shield or safety goggles) and do not exceed 40 psi (276 kPa) air pressure.

3. Clean all of the removed parts except the electrical components with clean fuel oil and dry with compressed air.

NOTE:
Any time the gear case cover is removed, the crankcase oil seal must be replaced. Install the new front oil seal after the gear case cover has been installed to the engine.

4. If necessary, remove the crankshaft front oil seal at this time. Refer to section 1.8.2. Inspect the gear case cover for stress cracks or breaks in the casting. Refer to section 1.10.2.1. Repair or replace as necessary. Refer to section 1.11.3.
5. Inspect all O-rings for signs of dryness or splitting. Replace as necessary.

1.10.3 Installation of Gear Case Cover

Perform the following steps for gear case installation:

1. Apply a continuous 1/16 in. bead of Gasket Eliminator PT-7276 (Loctite® 518) or equivalent to the mating surface of the gear case.

NOTE:
Gasket eliminator cures with the absence of air. The length of time between gear case cover installation and torquing the bolts that secure the gear case cover to the gear case should be kept to a minimum.

 Copyright © 2004 DETROIT DIESEL CORPORATION

2. Install two guide studs, J 36107, to the gear case. See Figure 1-177.

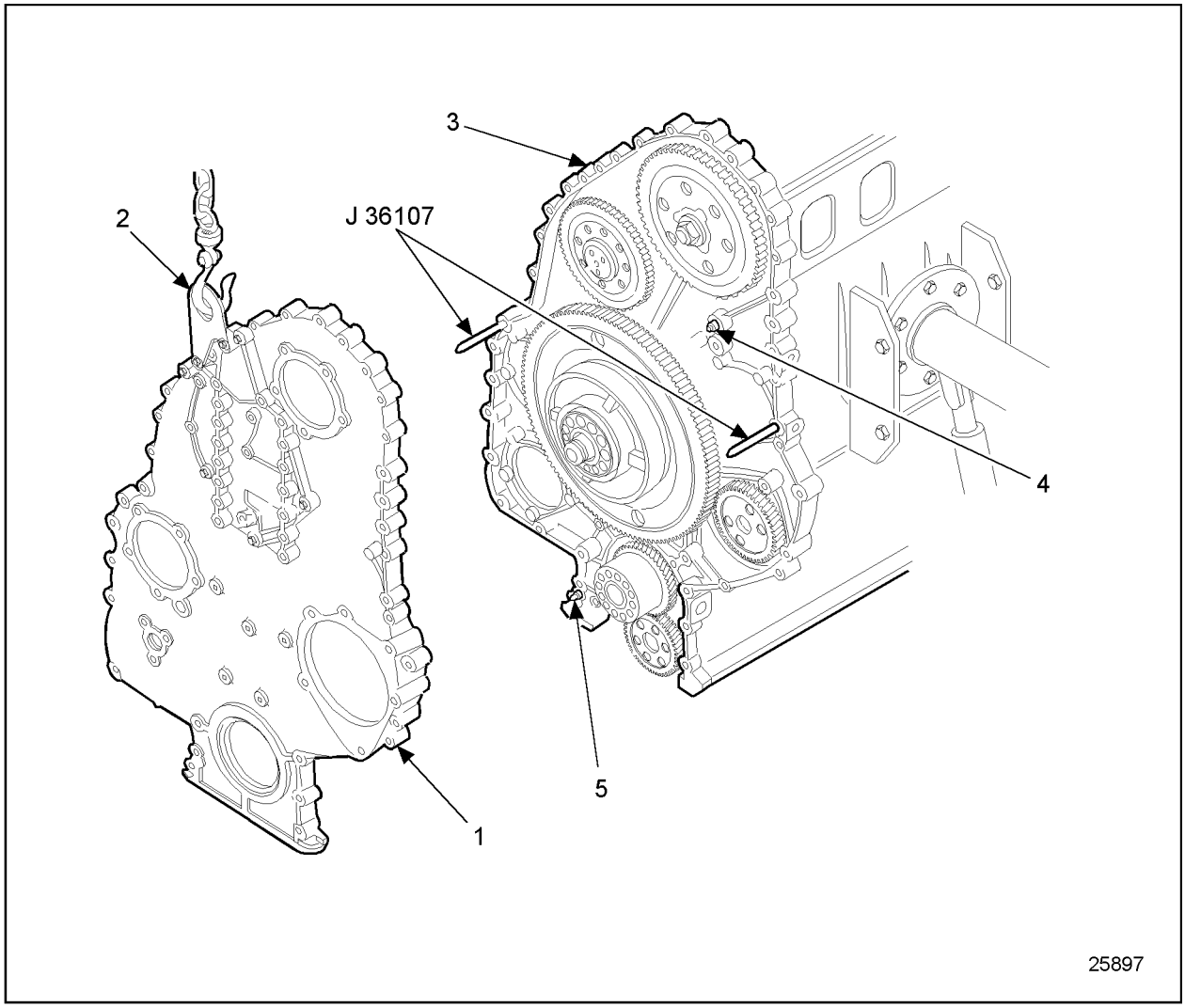

1. Front Gear Case Cover
2. Front Engine Lift Bracket
3. Front Gear Case Housing
4. Locating Dowel (Round)
5. Locating Dowel (Diamond)

Figure 1-177 Gear Case Cover Guide Stud Location

(Rev. 2004) *All information subject to change without notice.*
6SE483 0401 Copyright © 2004 DETROIT DIESEL CORPORATION

3. Support the gear case cover with a suitable lifting device, using the front engine lift bracket. See Figure 1-175.
4. Position the gear case cover on the guide studs and slide it forward. Index the two dowels in the gear case. See Figure 1-177.
5. For Series 60 2002 Engines there are 21 bolts that secure gear case cover to to gear case. Torque bolts No.1 through 19 to 65 N·m (48 lb·ft). Torque bolts 20 and 21 to 113 N·m (83 lb·ft). See Figure 1-178.

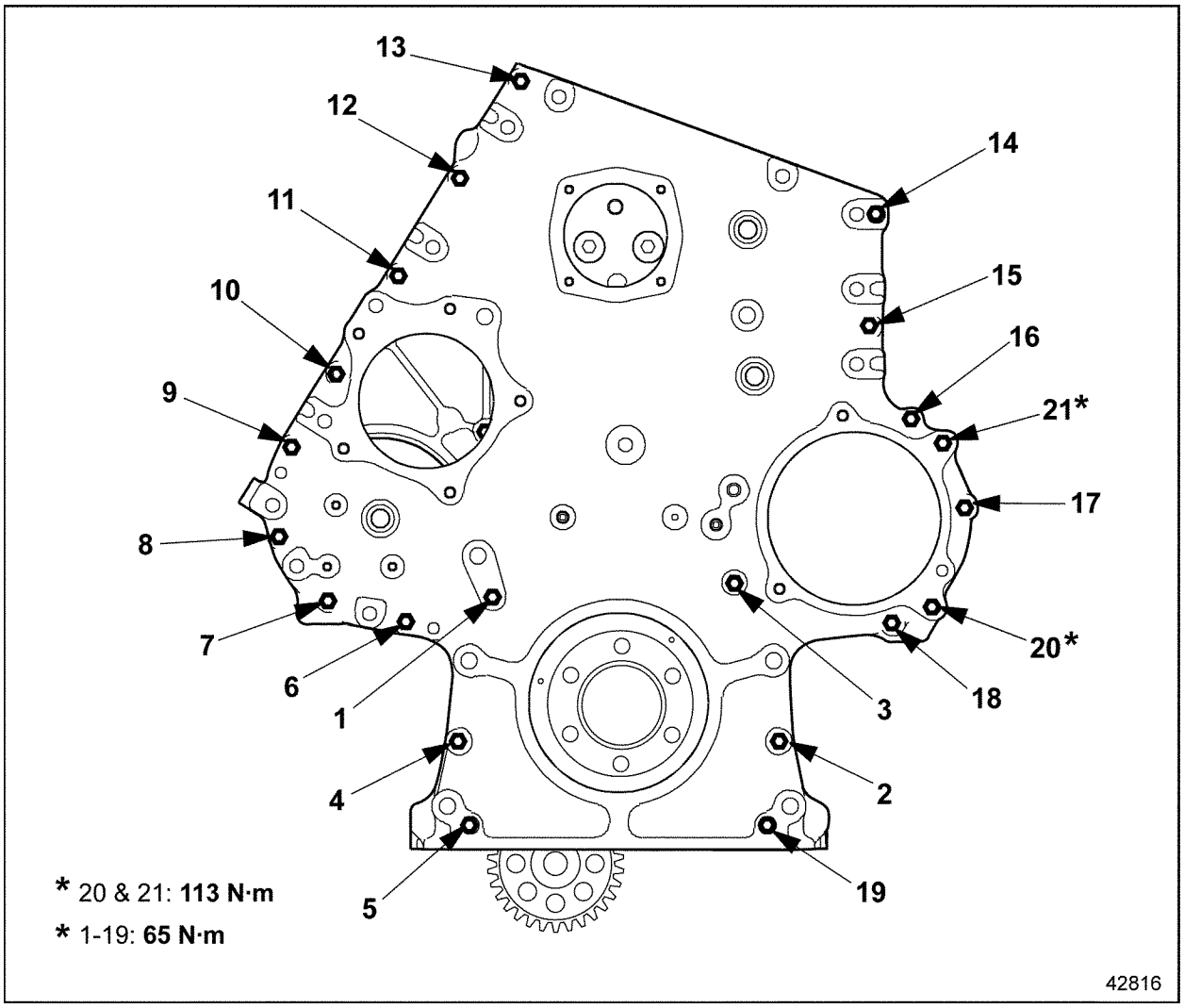

Figure 1-178 Gear Case Cover Bolt Torque Sequence Series 60 2002 Engine

6. There are 34 bolts that secure the gear case cover to the gear case (including five for the fan support bracket). Install them as follows:

 Copyright © 2004 DETROIT DIESEL CORPORATION

NOTICE:
With gasketless parts such as the gear case cover; the torque values and tightening sequences are critical to prevent parts warpage.

[a] Install the shorter bolts, No. 1 through 16, 21, 22 (see note), in various locations at the front of the gear case cover. Finger-tighten them. Remove the guide studs when installing bolts 7 and 14. See Figure 1-179.

NOTE:
Bolts 21 and 22 are rear bolts on pre-1991 engines.

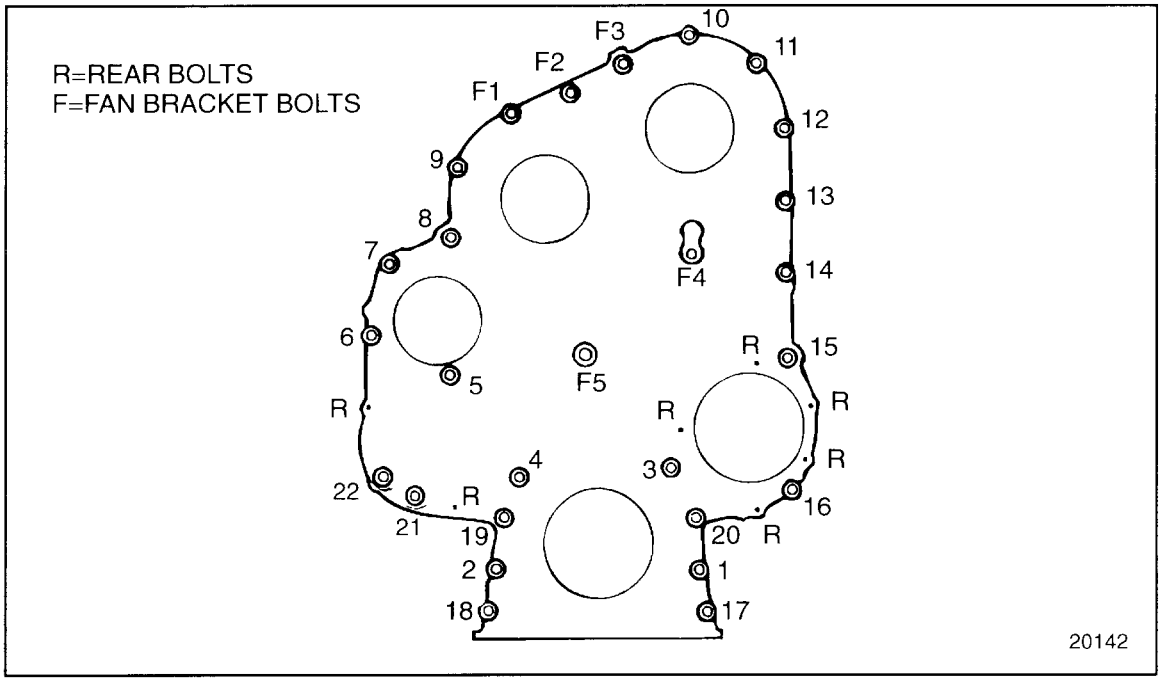

Figure 1-179 Gear Case Cover Bolt Torque Sequence (Front)

[b] Torque bolts 1 through 16, 21, 22 (see note), to 58-73 N·m (43-54 lb·ft).

(Rev. 2004) *All information subject to change without notice.*
6SE483 0401 Copyright © 2004 DETROIT DIESEL CORPORATION

[c] Install the front engine mount to the gear case cover. Install the four, longer, front engine mount-to-gear case cover bolts, finger-tight.

[d] Torque bolts 17, 18, 19 and 20 to 160-200 N·m (118-148 lb·ft). See Figure 1-179.

[e] Bolts F1 through F5 are fan support bracket bolts. Install the fan support bracket and torque bolts F1, F2 and F3 to 58-73 N·m (43-54 lb·ft). Torque bolts F4 and F5 to 160-200 N·m (118-148 lb·ft).

[f] Install the six bolts on the intake (left) side of the engine around the air compressor drive. Torque the bolts to 58-73 N·m (43-54 lb·ft), using the sequence. See Figure 1-180.

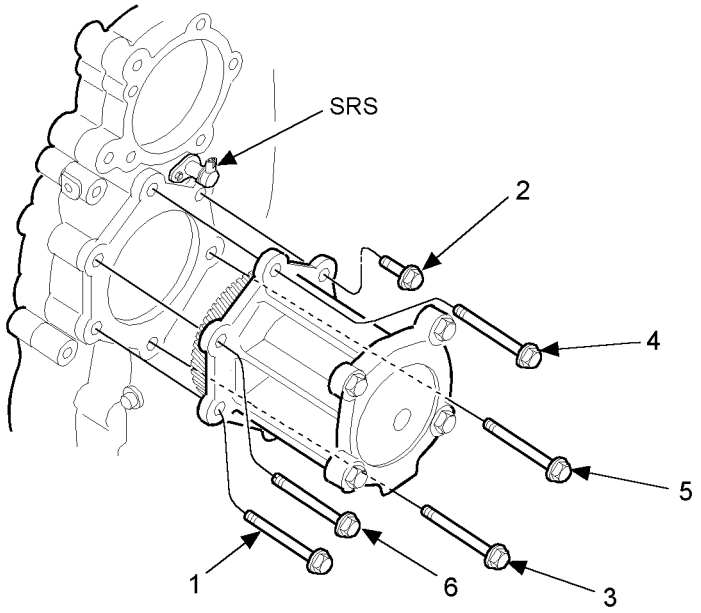

Figure 1-180 Air Compressor Drive Torque Sequence

[g] Install the SRS to the gear case; refer to section 2.32.3.

 Copyright © 2004 DETROIT DIESEL CORPORATION

[h] Install the two rear mounted bolts (pre - 1991 engines only) bolts on the exhaust (right) side of the engine. Torque the number 2 and 3 bolts to 58-73 N·m (43-54 lb·ft) torque. See Figure 1-181.

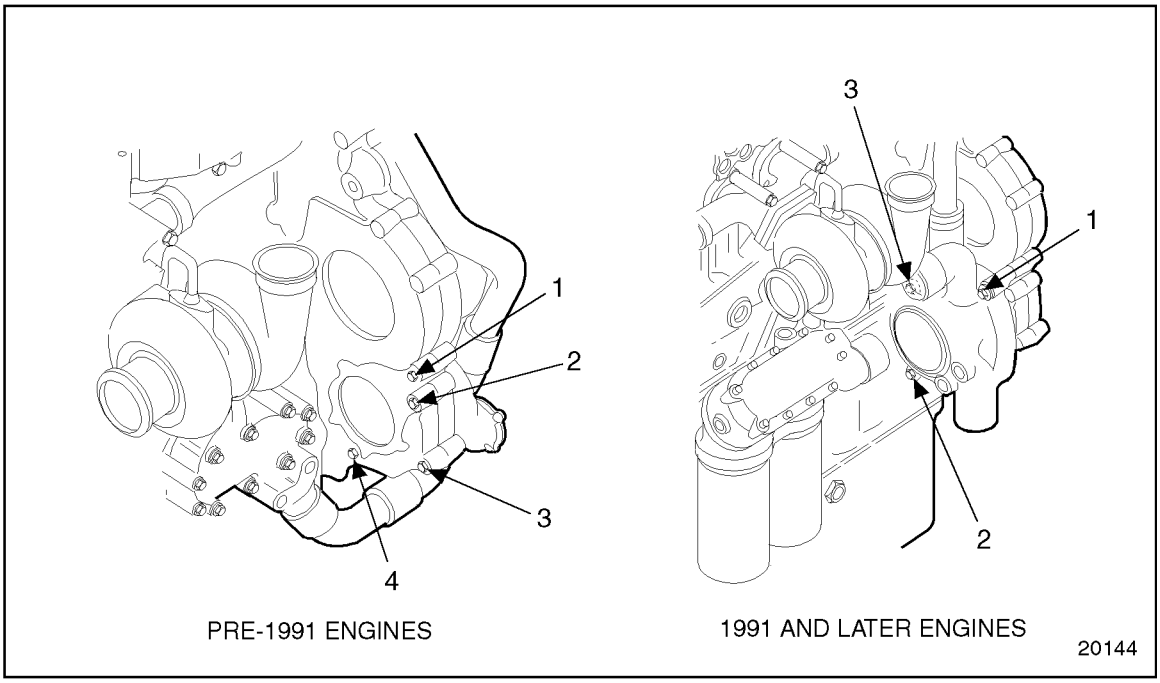

Figure 1-181 Gear Case Cover Bolt Torque Sequence (Right Rear)

7. Install a new crankshaft front oil seal. Refer to section 1.8.7.
8. Install the accessory drive assembly to the gear case. Refer to section 1.29.5.
9. Install the vibration damper to the crankshaft. Refer to section 1.12.3.
10. Install the crankshaft pulley to the end of the crankshaft. Refer to section 1.13.3.
11. Install the water pump assembly. Refer to section 4.2.8for gear case mounted. Refer to section 4.3.7 for front mounted.
12. Install a new gasket between the power steering pump cover and the gear case (if so equipped).
13. Install the power steering pump cover to the gear case cover with the six bolts. Tighten the bolts progressively in a star-shaped pattern to draw the power steering pump in evenly. Torque the bolts to 30-38 N·m (22-28 lb·ft), using a star-shaped pattern.
14. Insert a new gasket between the camshaft drive gear access cover and the gear case cover.

(Rev. 2004) *All information subject to change without notice.*
6SE483 0401 Copyright © 2004 DETROIT DIESEL CORPORATION

15. Install the camshaft drive gear access cover to the gear case cover. Torque the bolts to 30-38 N·m (22-28 lb·ft), using the tightening sequence. See Figure 1-182.

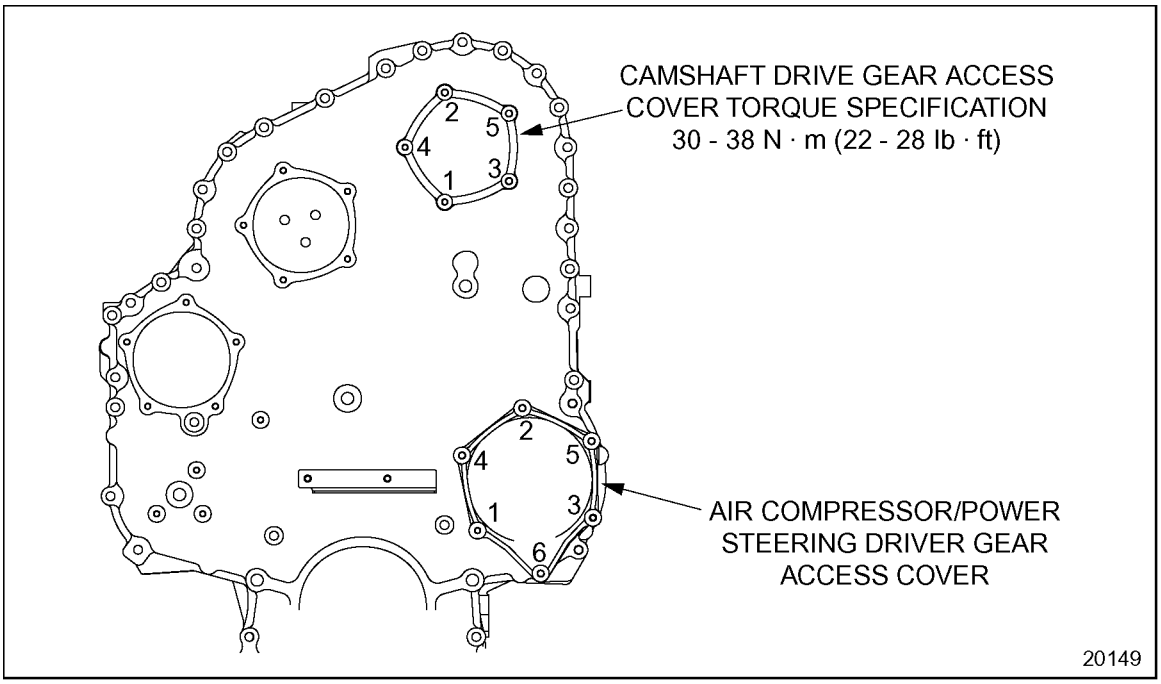

Figure 1-182 Access Cover Bolt Torque Sequences

16. Install the air conditioner compressor and brackets. Install the air conditioner compressor drive belt. Refer to OEM guidelines.
17. Install the alternator and brackets. Refer to section 8.2.3. Install the alternator drive belts. Refer to section 13.13.10.
18. Adjust the alternator and air conditioner compressor drive belts to the specifications. Refer to section 13.13.10.
19. Install the engine oil pan. Refer to section 3.11.4. Fill the crankcase with recommended lubricating oil. Refer to section 13.13.1.

 Copyright © 2004 DETROIT DIESEL CORPORATION

1.10.4 Installation of Acoustical Gear Case Covers

Install acoustical covers as outlined below. See Figure 1-183, and see Figure 1-184, for Group A installations with accessory drive. See Figure 1-185 and see Figure 1-186for installation on Group B without accessory drive. See Figure 1-187 and see Figure 1-188for typical Group C installations. See Figure 1-189and see Figure 1-190for Group D installations.

1. Using required fasteners, install front gear case acoustical cover and accessory drive acoustical cover. Tighten bolts and nut(s) to the torque values: listed in Table 1-4.
2. Using required fasteners and clips, install right rear and left rear covers. Tighten bolts and nut(s) to the torque values listed in Table 1-4.

Bolt or Nut Size	Required Torque
M6 x 1.0	13-16 N·m (10-12 lb·ft)
M8 x 1.25	30-38 N·m (22-28 lb·ft)
M10 x 1.5	58-73 N·m (43-54 lb·ft)

Table 1-4 Acoustical Cover Fastener Torque Values

(Rev. 2004) *All information subject to change without notice.*
6SE483 0401 Copyright © 2004 DETROIT DIESEL CORPORATION

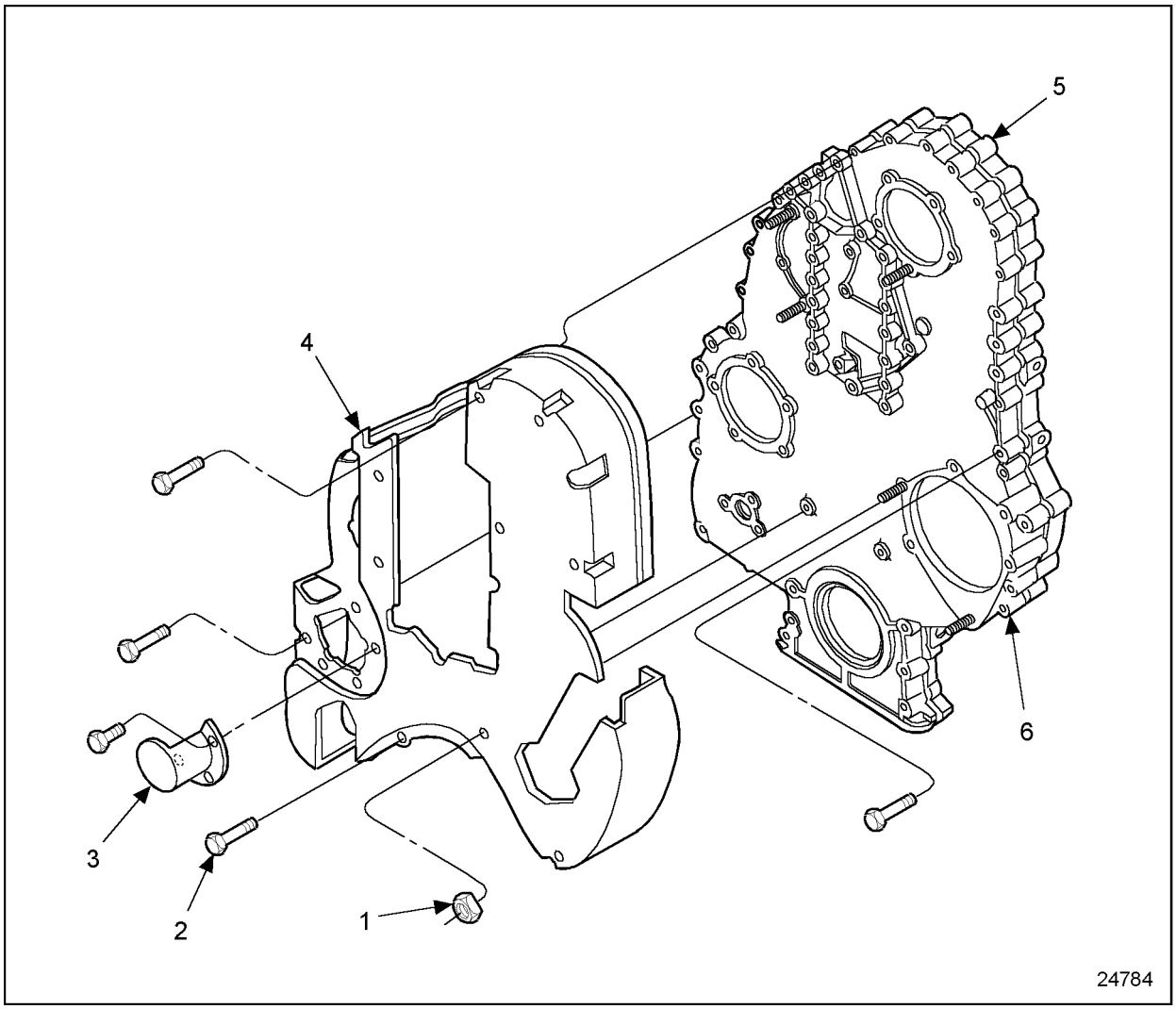

1. Nut
2. Bolt
3. Acoustical Cover Clip
4. Acoustical Cover
5. Gear Case
6. Gear Case Cover

Figure 1-183 Typical Group A Front Acoustical Cover Installation (With Accessory Drive)

 Copyright © 2004 DETROIT DIESEL CORPORATION

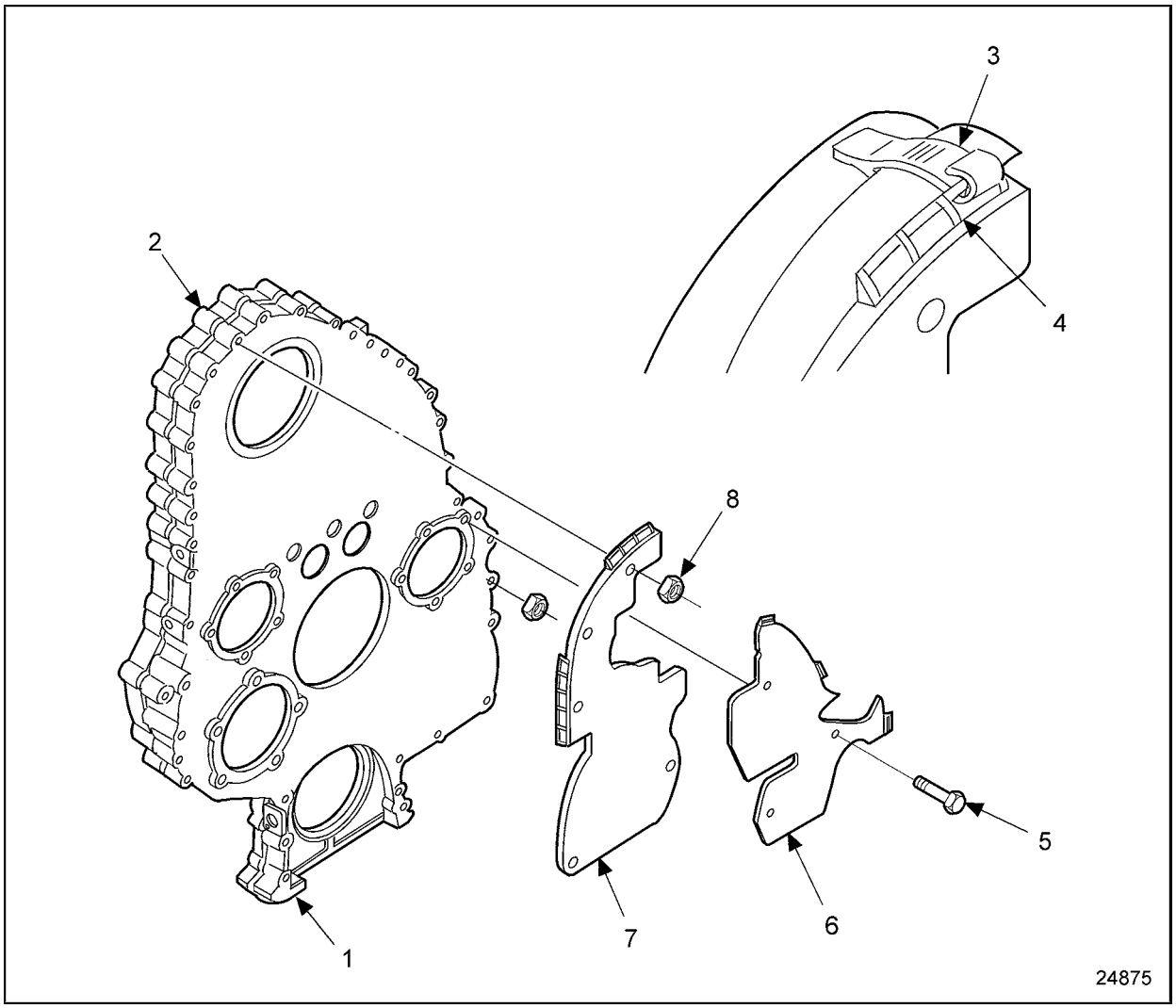

1. Gear Case Cover
2. Gear Case
3. Acoustical Cover Snap
4. Acoustical Cover Clip
5. Bolt
6. Acoustical Cover
7. Acoustical Cover
8. Nut

Figure 1-184 Typical Group A Rear Acoustical Cover Installation (With Accessory Drive)

(Rev. 2004) *All information subject to change without notice.*
6SE483 0401 Copyright © 2004 DETROIT DIESEL CORPORATION

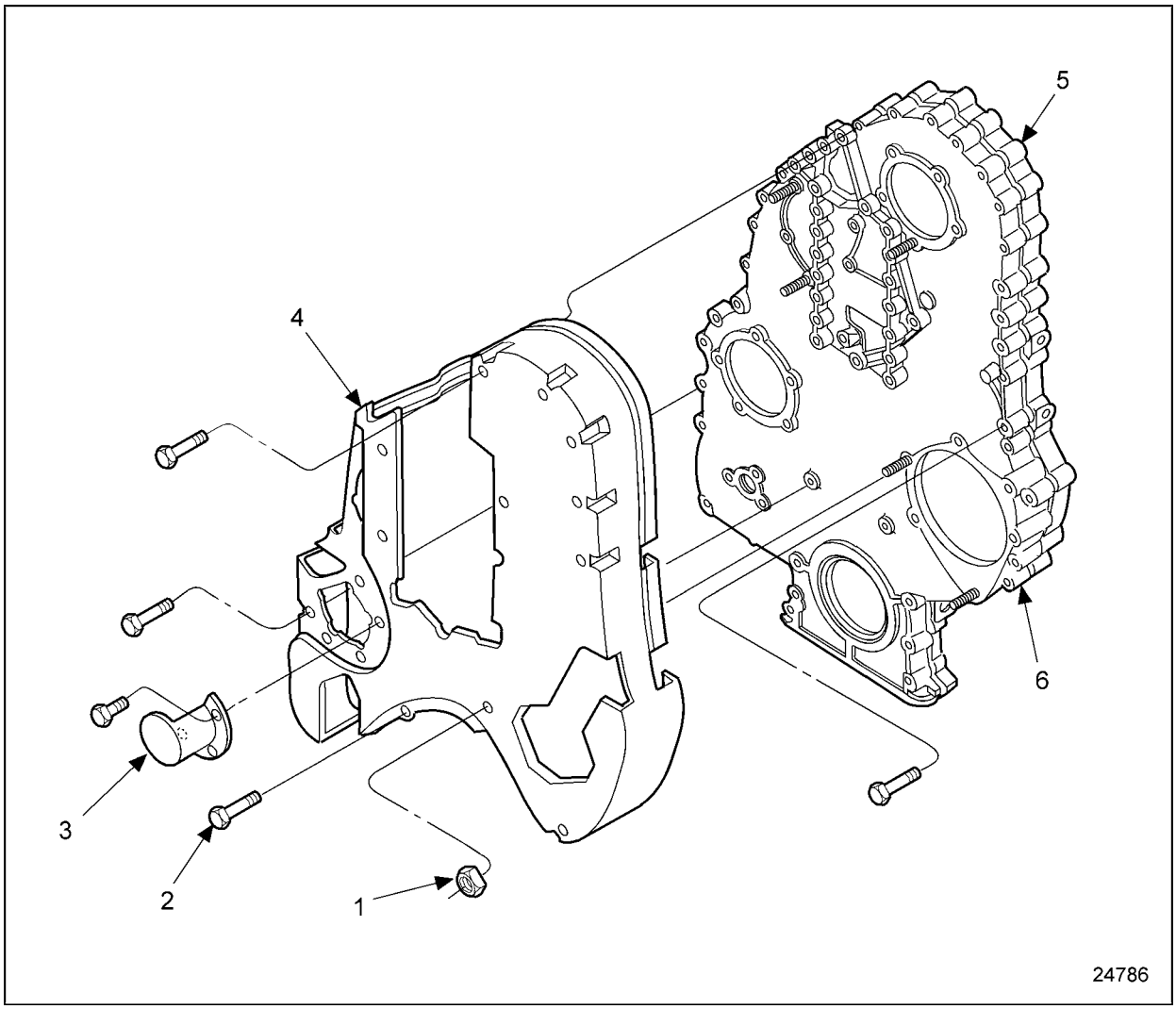

1. Nut
2. Bolt
3. Acoustical Cover Clip
4. Acoustical Cover
5. Gear Case
6. Gear Case Cover

Figure 1-185 Typical Group B Front Acoustical Cover Installation (No Accessory Drive)

 Copyright © 2004 DETROIT DIESEL CORPORATION

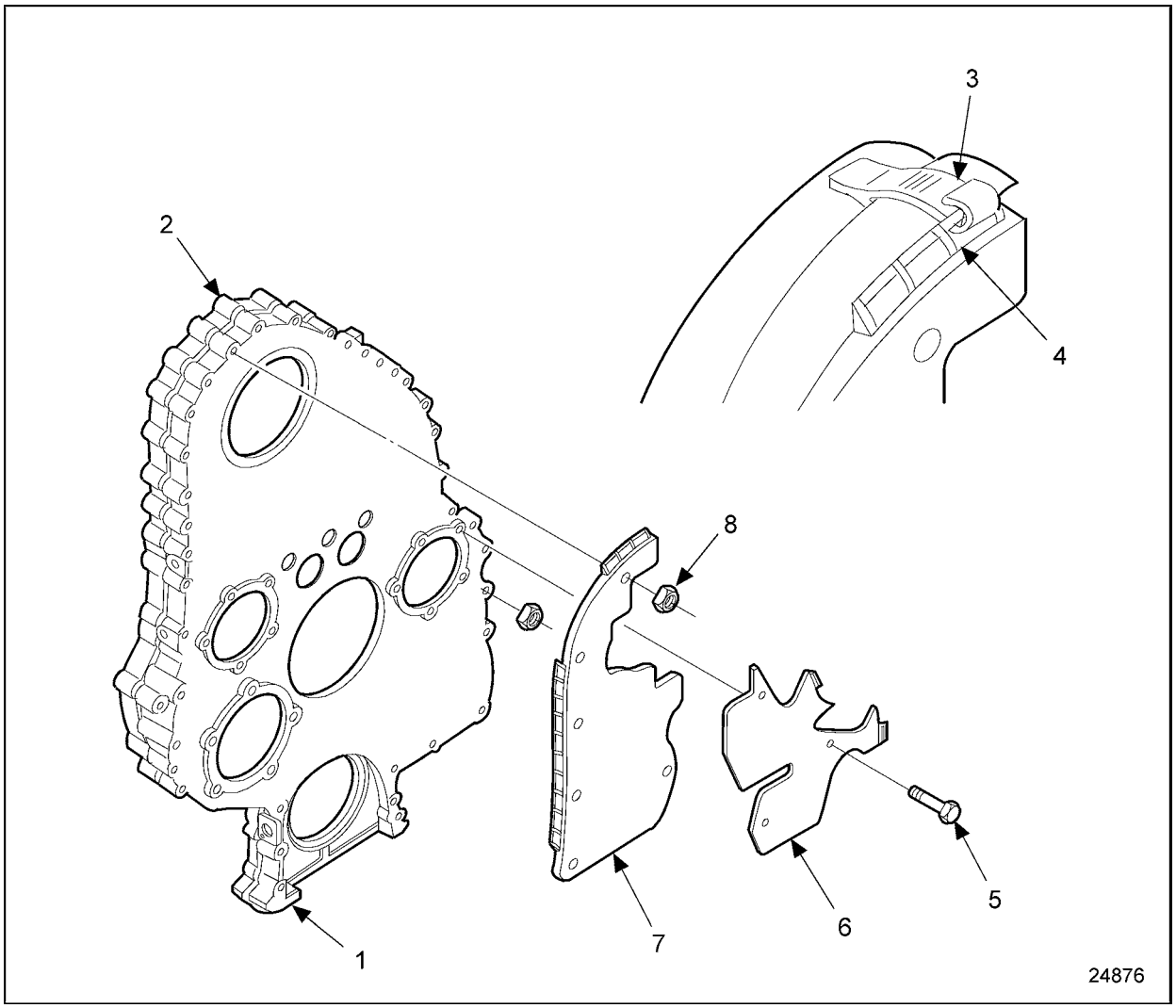

1. Gear Case Cover
2. Gear Case
3. Acoustical Cover Snap
4. Acoustical Cover Clip
5. Bolt
6. Acoustical Cover
7. Acoustical Cover
8. Nut

Figure 1-186 Typical Group B Rear Acoustical Cover Installation (No Accessory Drive)

(Rev. 2004) *All information subject to change without notice.*
6SE483 0401 Copyright © 2004 DETROIT DIESEL CORPORATION

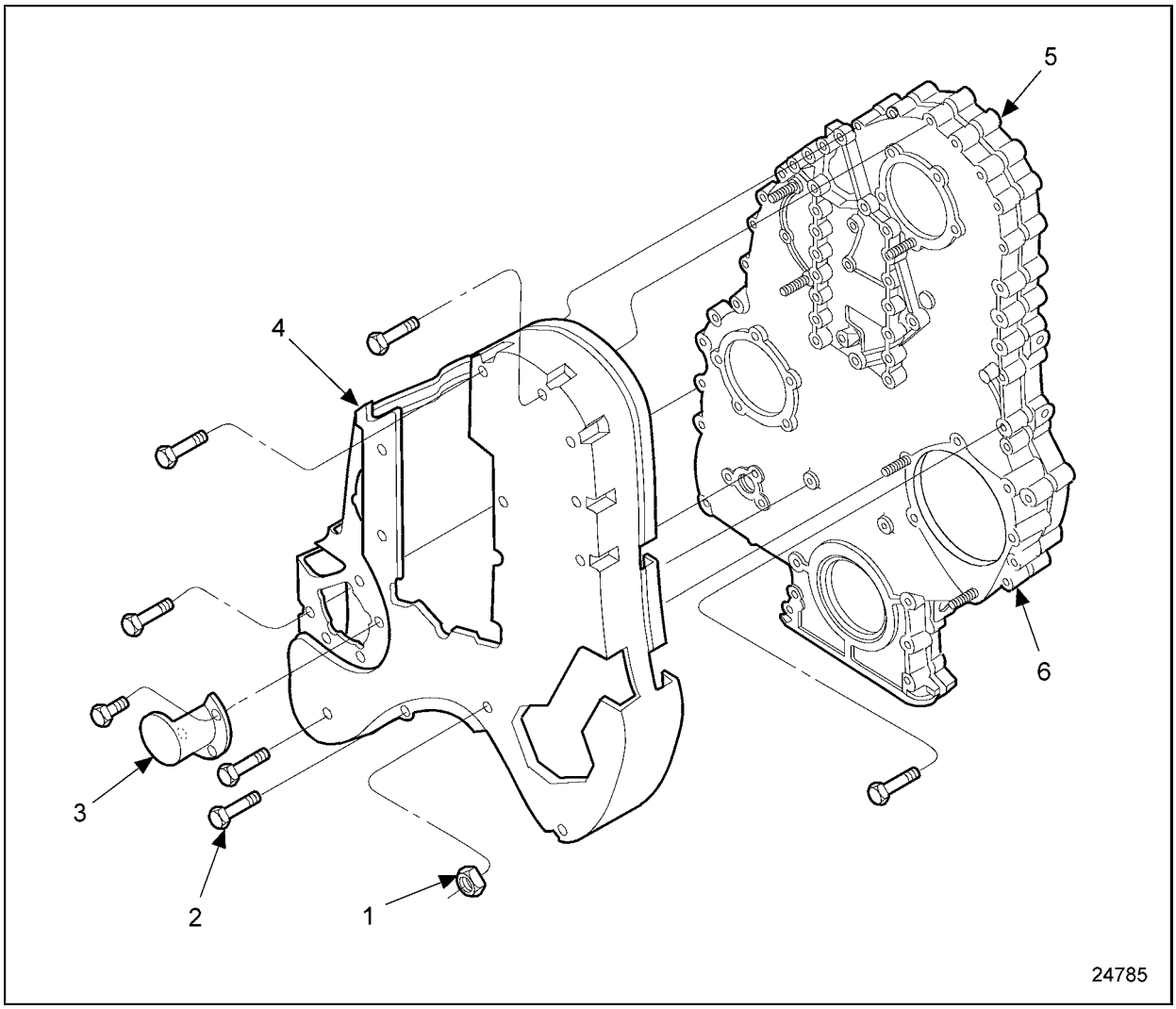

1. Nut
2. Bolt
3. Acoustical Cover Clip
4. Acoustical Cover
5. Gear Case
6. Gear Case Cover

Figure 1-187 Typical Group C Front Acoustical Cover Installation

 Copyright © 2004 DETROIT DIESEL CORPORATION

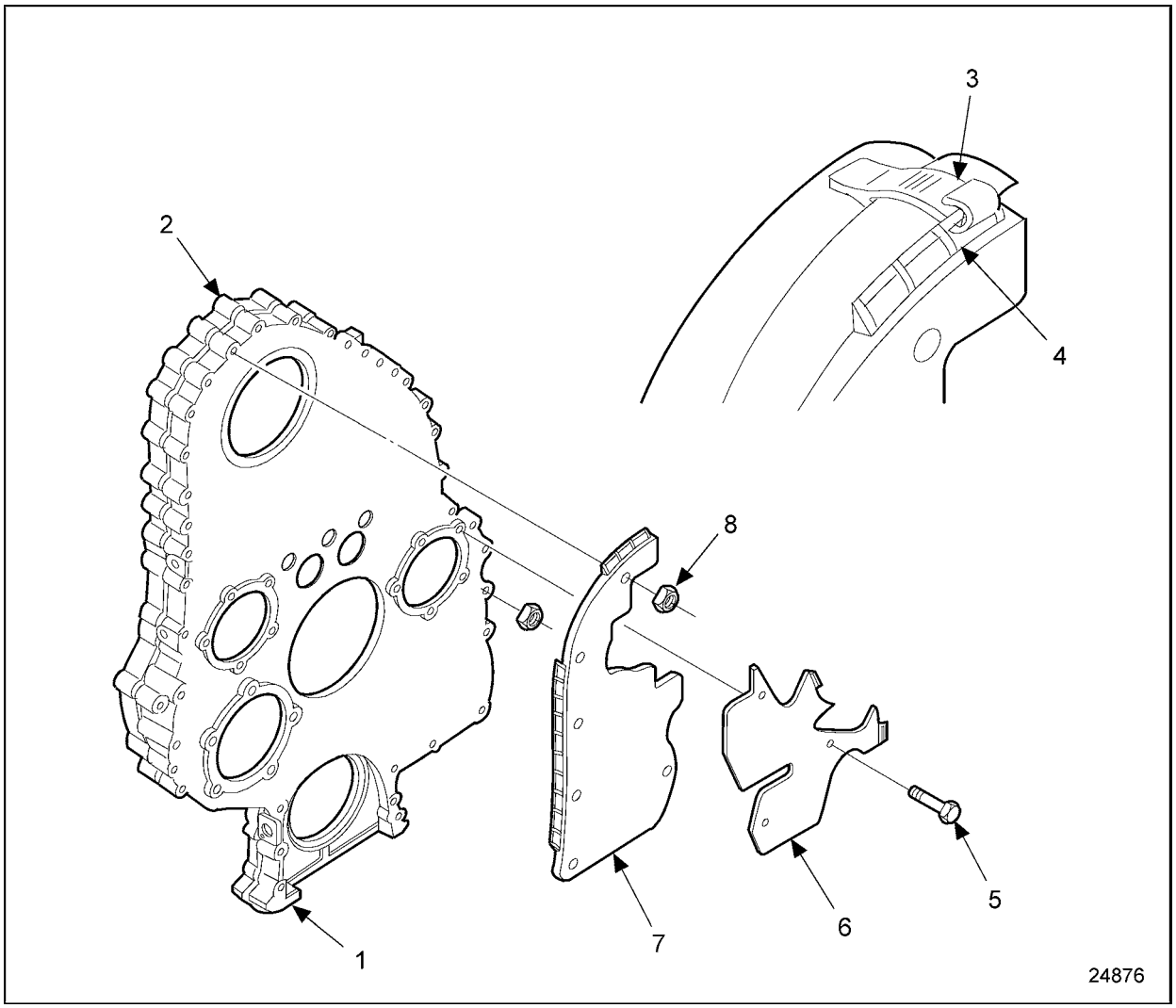

1. Gear Case Cover
2. Gear Case
3. Acoustical Cover Snap
4. Acoustical Cover Clip
5. Bolt
6. Acoustical Cover
7. Acoustical Cover
8. Nut

Figure 1-188 Typical Group C Rear Acoustical Cover Installation

(Rev. 2004) *All information subject to change without notice.*
6SE483 0401 Copyright © 2004 DETROIT DIESEL CORPORATION

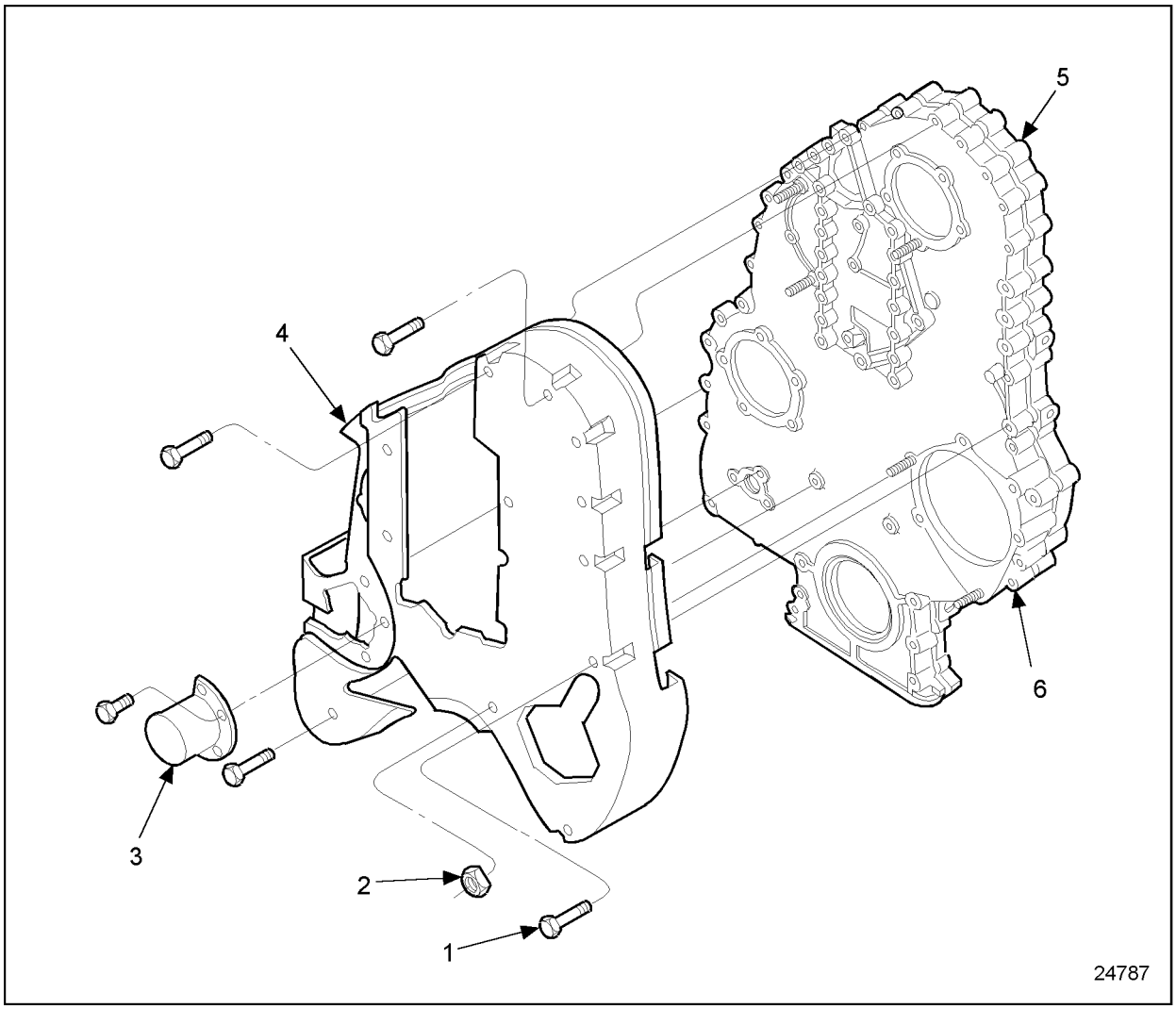

1. Bolt
2. Nut
3. Acoustical Cover Clip
4. Acoustical Cover
5. Gear Case
6. Gear Case Cover

Figure 1-189 Typical Group D Front Acoustical Cover Installation

 Copyright © 2004 DETROIT DIESEL CORPORATION

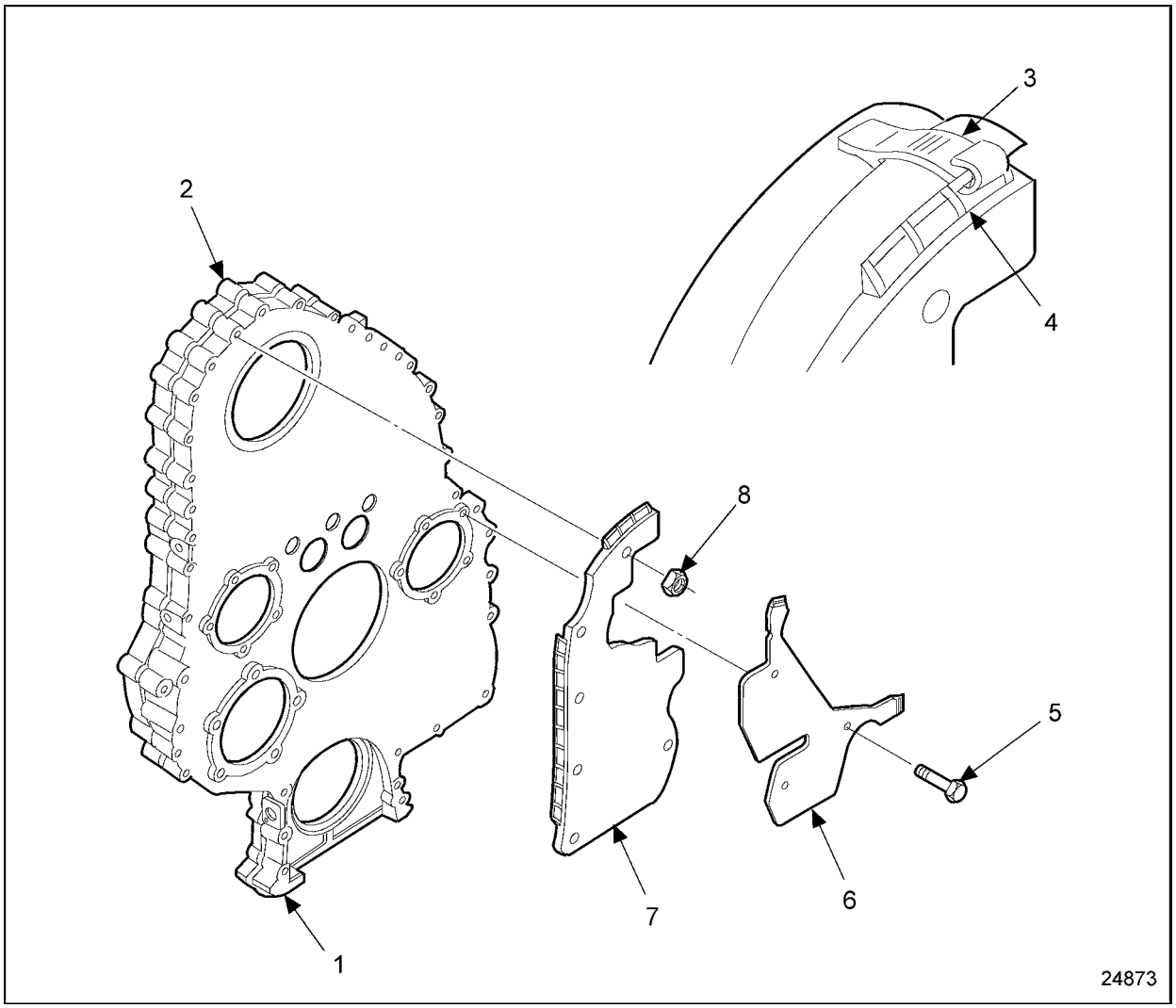

1. Gear Case Cover
2. Gear Case
3. Acoustical Cover Snap
4. Acoustical Cover Clip
5. Bolt
6. Acoustical Cover
7. Acoustical Cover
8. Nut

Figure 1-190 Typical Group D Rear Acoustical Cover Installation

(Rev. 2004) *All information subject to change without notice.*
6SE483 0401 Copyright © 2004 DETROIT DIESEL CORPORATION

1.11 GEAR CASE

The gear case housing is constructed of cast iron, with machined mating surfaces, and is bolted to the front of the engine cylinder block. The gear case and gear case cover are bolted together to provide a sealed compartment for the engine gear train. See Figure 1-191.

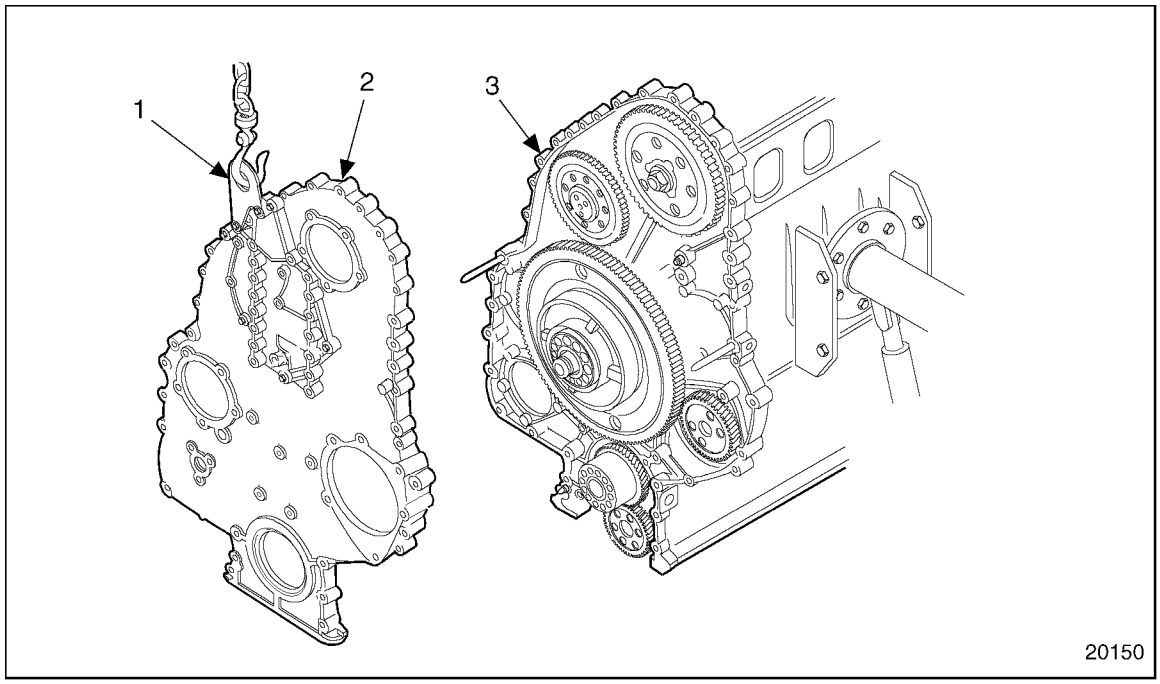

1. Lifting Bracket
2. Gear Case Cover
3. Gear Case Housing

Figure 1-191 Gear Case and Gear Case Cover

Several components are mounted to the gear case, including the adjustable idler gear assembly, see Figure 1-194, the fuel pump drive assembly, see Figure 1-195, the air compressor drive assembly or raw water pump drive assembly, see Figure 1-196; the water pump assembly (1991 and later engines) see Figure 1-197; and the camshaft thrust plate and drive gear assembly see Figure 1-218.

 Copyright © 2004 DETROIT DIESEL CORPORATION

In July 2001, new right and left side gear case stiffening brackets were added to provide: reduce engine noise, increase belt driven accessory life, reduce gear case vibration amplitude and reduce wear on the cam thrust plate perimeter seal. See Figure 1-192and see Figure 1-193.

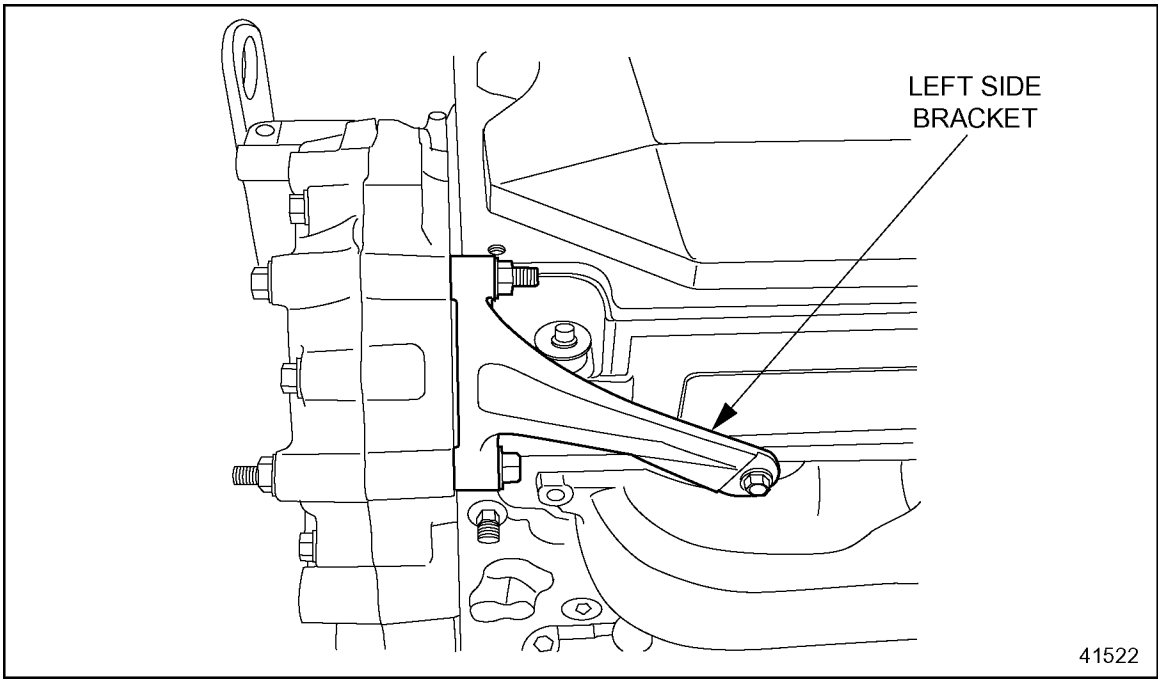

Figure 1-192 Gear Case Stiffening Bracket (Left Side)

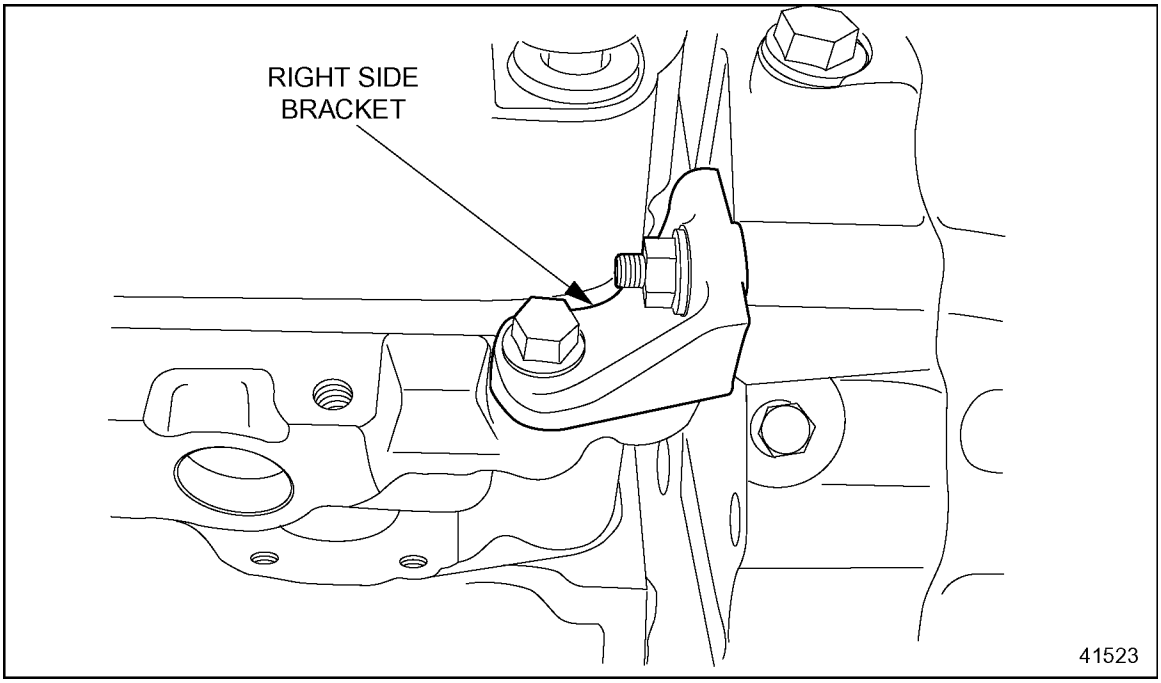

Figure 1-193 Gear Case Stiffening Bracket (Right Side)

(Rev. 2004) *All information subject to change without notice.*
6SE483 0401 Copyright © 2004 DETROIT DIESEL CORPORATION

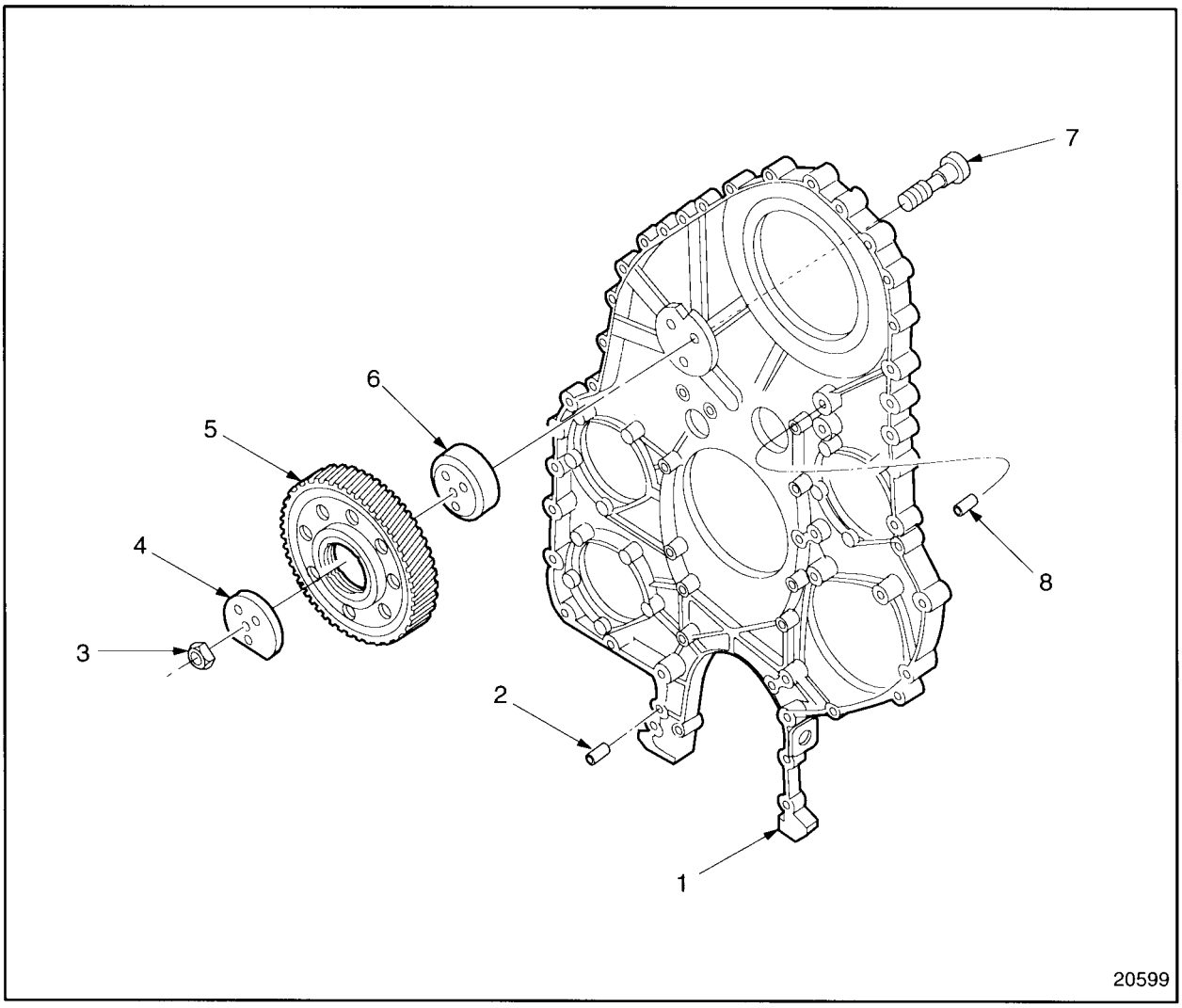

1. Gear Case
2. Diamond Dowel
3. Adjustable Idler Gear Locknut (3)
4. Adjustable Idler Gear Hub, Retainer
5. Adjustable Idler Gear
6. Adjustable Idler Hub
7. Adjustable Idler Gear Stud (3)
8. Round Dowel

Figure 1-194 Adjustable Idler Gear Assembly

 Copyright © 2004 DETROIT DIESEL CORPORATION

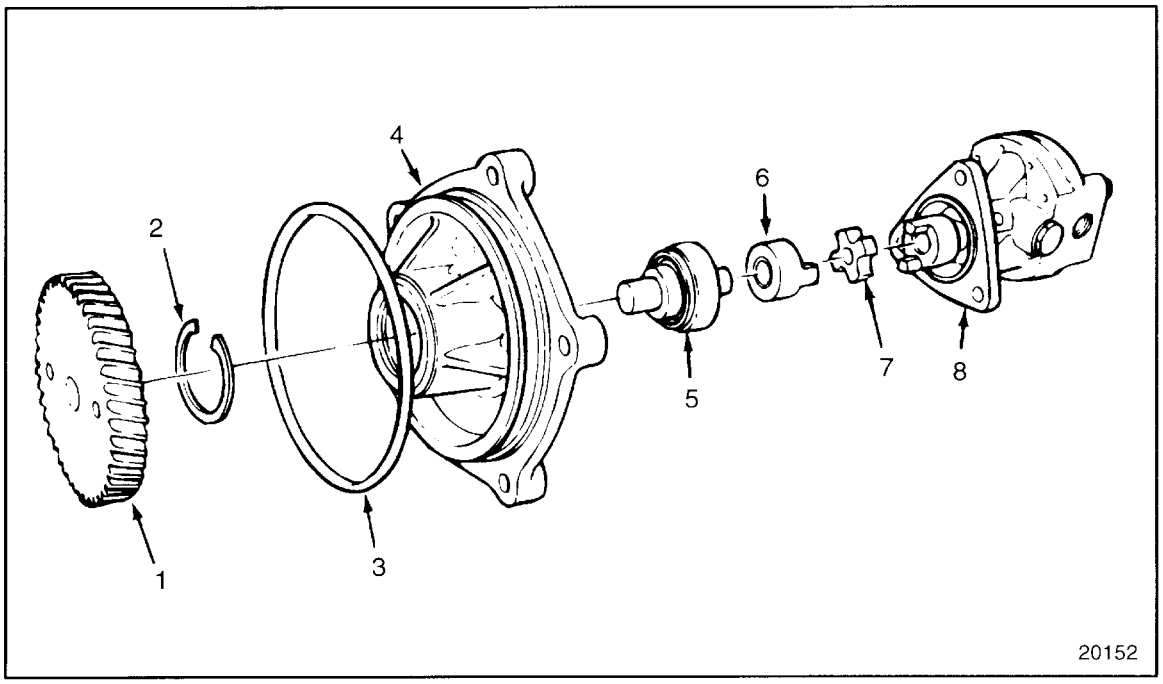

1. Fuel Pump Drive Gear
2. Snap Ring
3. O-ring
4. Fuel Pump Drive Housing
5. Shaft and Bearing Assembly
6. Fuel Pump Drive Hub
7. Fuel Pump Drive Coupling
8. Fuel Pump Assembly

Figure 1-195 Fuel Pump Drive Assembly

(Rev. 2004) *All information subject to change without notice.*
6SE483 0401 Copyright © 2004 DETROIT DIESEL CORPORATION

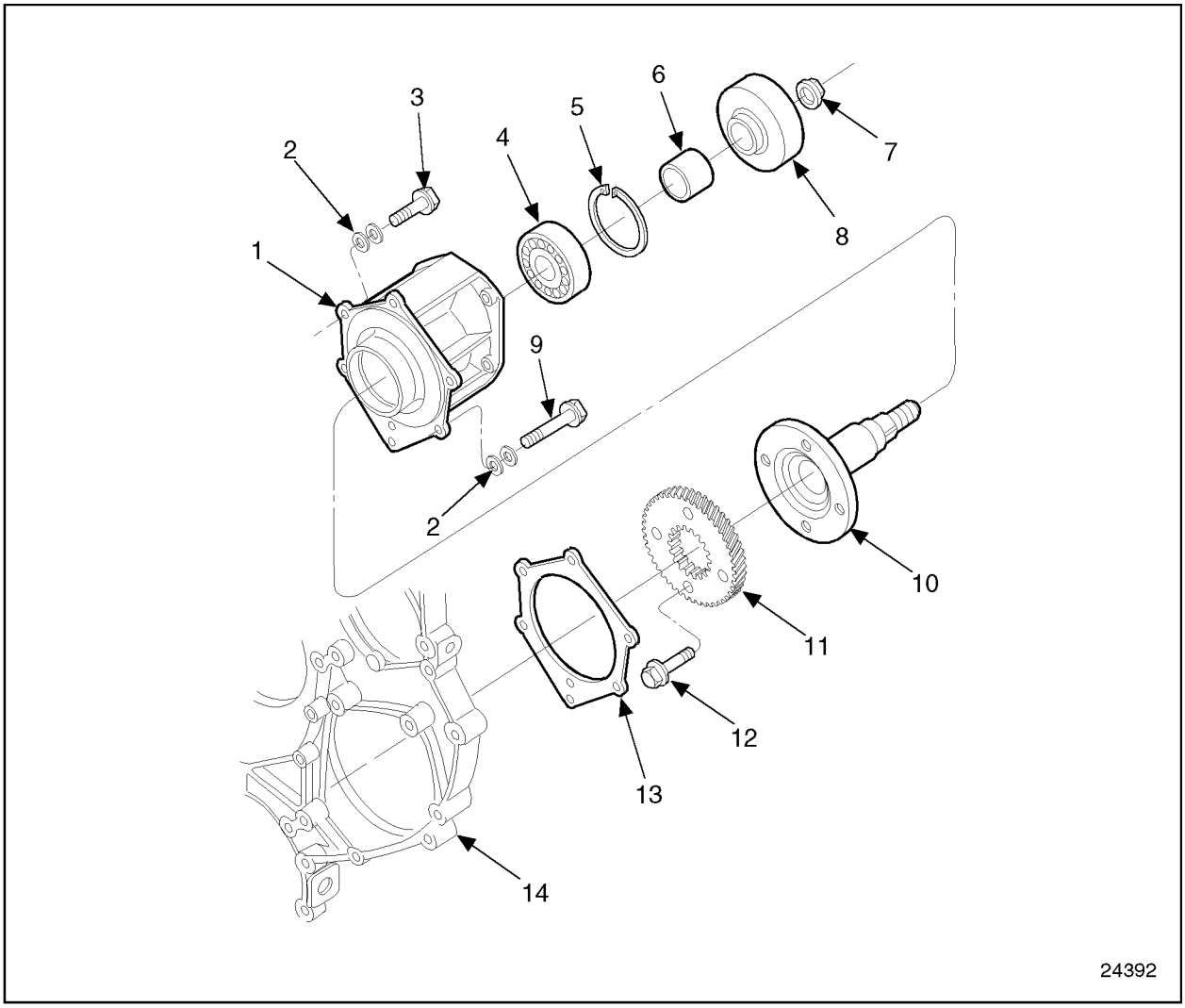

1. Drive Housing
2. Washers
3. Drive Housing Short Bolt
4. Drive Ball Bearing
5. Snap Ring
6. Spacer
7. Drive Hub
8. Drive Hub Flange Nut
9. Drive Housing Long Bolt
10. Drive Shaft
11. Drive Gear
12. Drive Gear Bolt
13. Drive Housing Gasket
14. Gear Case Housing

Figure 1-196 Air Compressor or Raw Water Pump Drive Assembly

 Copyright © 2004 DETROIT DIESEL CORPORATION

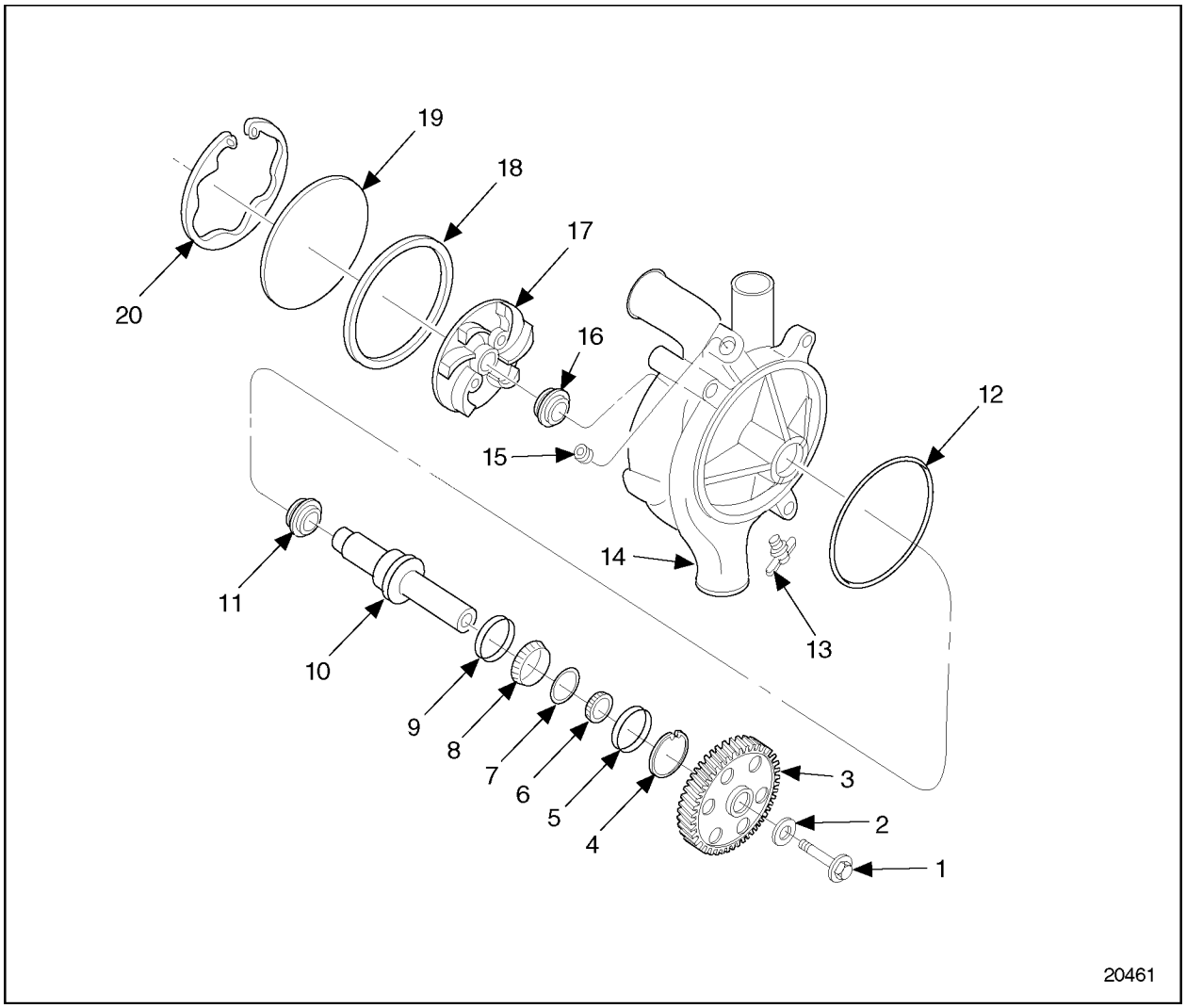

1. Retaining Bolt
2. Washer
3. Water Pump Drive Gear
4. Snap-ring
5. Bearing Race
6. Bearing
7. Spacer Rings (2)
8. Bearing
9. Bearing Race
10. Drive Shaft
11. Oil Seal
12. Water Pump Housing O-ring
13. Drain Cock
14. Water Pump Housing
15. Water Pump Housing Pipe Plug
16. Water Seal
17. Impeller
18. Water Pump Cover O-ring
19. Water Pump Cover
20. Water Pump Cover Snap Ring

Figure 1-197 Water Pump Assembly

(Rev. 2004) *All information subject to change without notice.*
6SE483 0401 Copyright © 2004 DETROIT DIESEL CORPORATION

To eliminate the possibility of oil leakage at the adjustable idler gear stud location, Detroit Diesel recommends the following:

When rebuilding a Series 60 engine, or if the gear case is removed for any reason, the three original adjustable idler gear studs should be removed and replaced with new studs.

Before pressing studs into the gear case, coat the shanks and underside of the stud heads with Loctite® No. 242 Sealant. This will prevent any oil leakage around the studs during engine operation.

The Timing Reference Sensor (TRS) is an electronic component that is bolted to the side of the gear case on the intake (left) side of the engine just above the oil pan. See Figure 1-198.

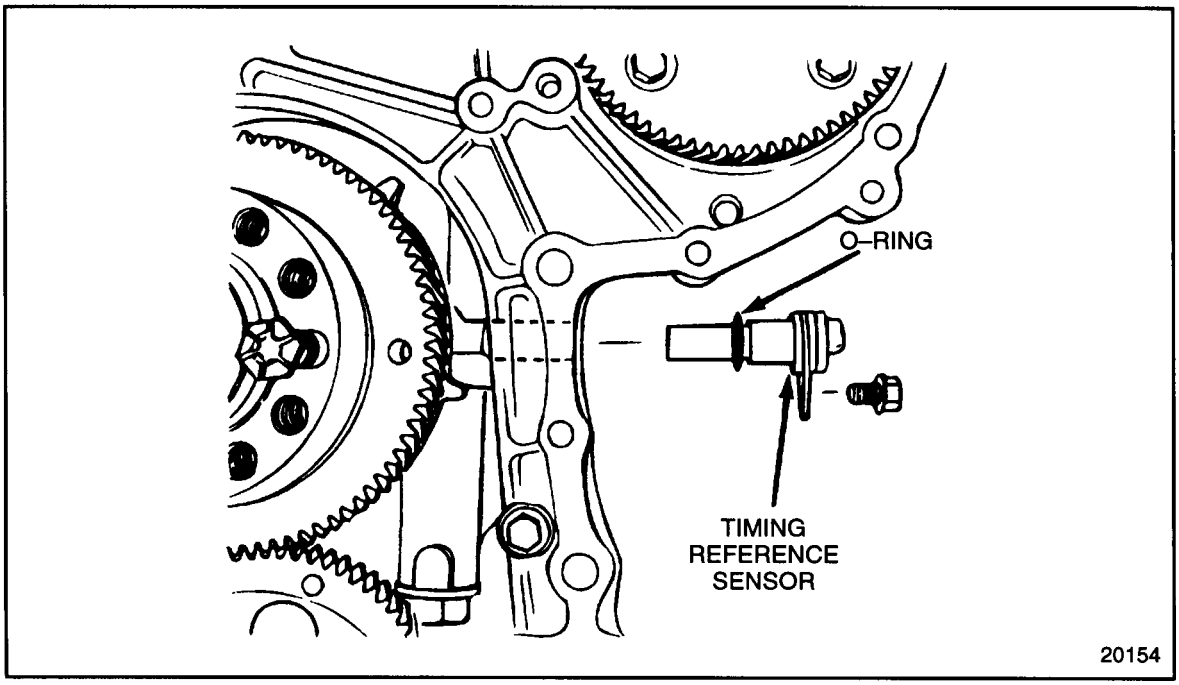

Figure 1-198 Timing Reference Sensor (TRS)

 Copyright © 2004 DETROIT DIESEL CORPORATION

The Synchronous Reference Sensor (SRS) is an electronic component that is bolted to the gear case at the lower, intake (left) side of the engine. See Figure 1-199.

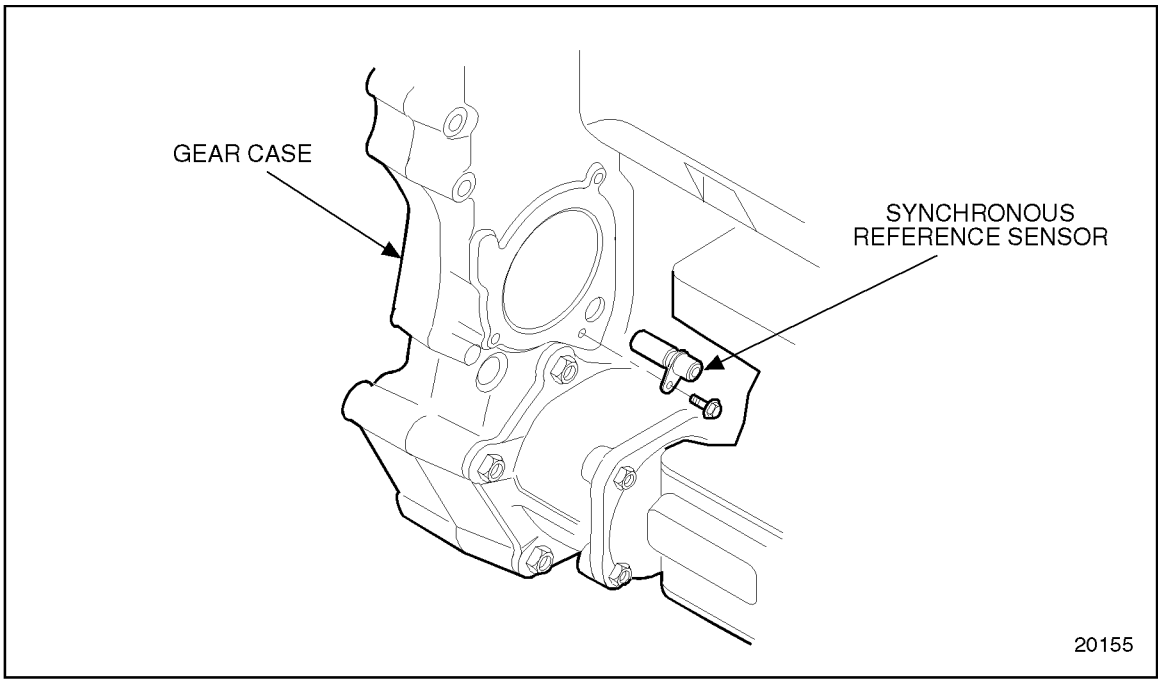

Figure 1-199 Synchronous Reference Sensor

(Rev. 2004) *All information subject to change without notice.*
6SE483 0401 Copyright © 2004 DETROIT DIESEL CORPORATION

An opening is provided in the center of the gear case, for the bull gear and camshaft idler gear assembly, which bolts directly to the engine block. See Figure 1-200.

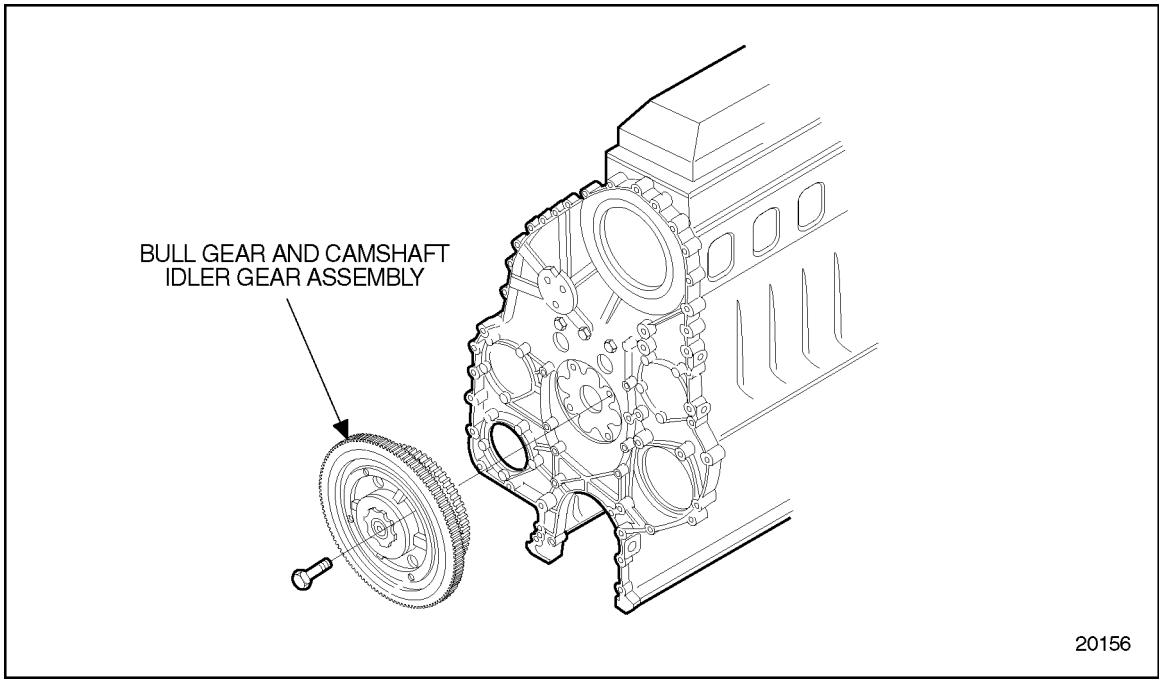

Figure 1-200 Bull Gear and Camshaft Idler Gear Assembly

 Copyright © 2004 DETROIT DIESEL CORPORATION

An access cover is provided at the rear of the gear case on the cooler (right) side of the engine. This access cover provides an opening for inspection of the accessory drive assembly drive gear. See Figure 1-201.

NOTE:
This access cover opening may be cast closed on the rear of the gear case.

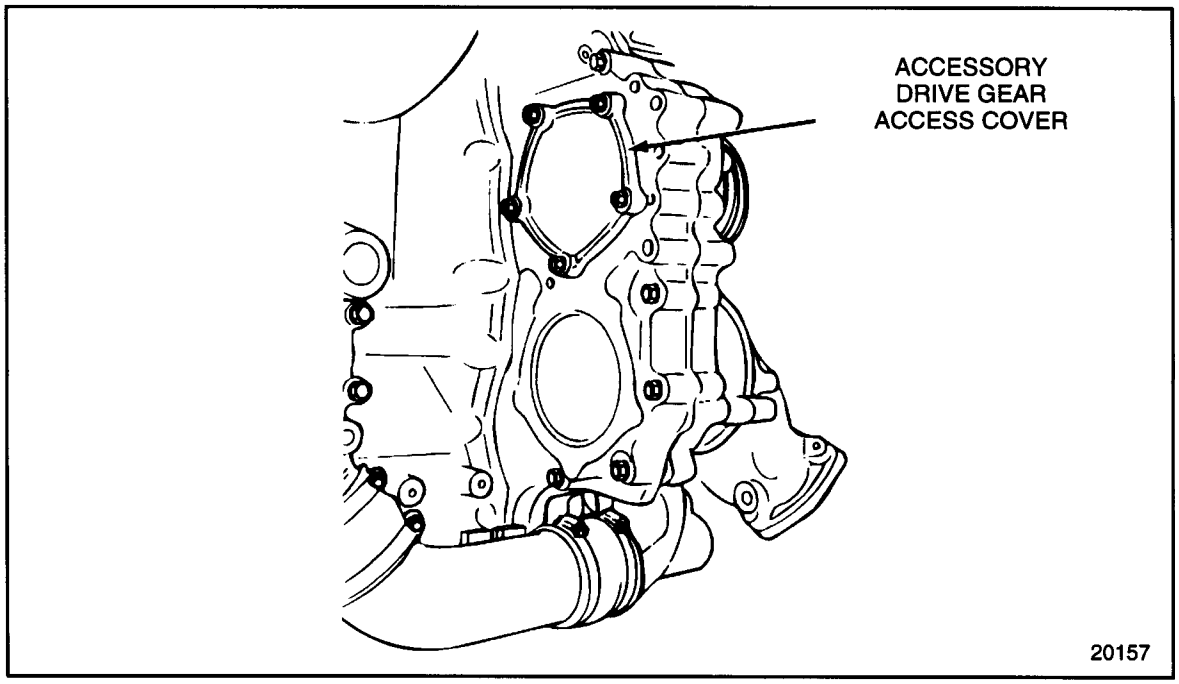

Figure 1-201 Accessory Drive Gear Access Cover (Pre-1991 Engines)

(Rev. 2004) *All information subject to change without notice.*
6SE483 0401 Copyright © 2004 DETROIT DIESEL CORPORATION

For gear lash measurement and adjustment procedures for the gears in the engine gear train, Refer to section 1.22.2.1.

An oil gallery is drilled in the gear case casting, for lubrication of the adjustable idler gear assembly. A hole in the front of the cylinder block, indexes with the gear case gallery. At the edge of the gear case the gallery is threaded for insertion of a plug. An exit hole feeds the adjustable idler gear assembly. See Figure 1-202.

NOTE:
Do not use the oil plug location for an oil supply or for checking oil pressure.

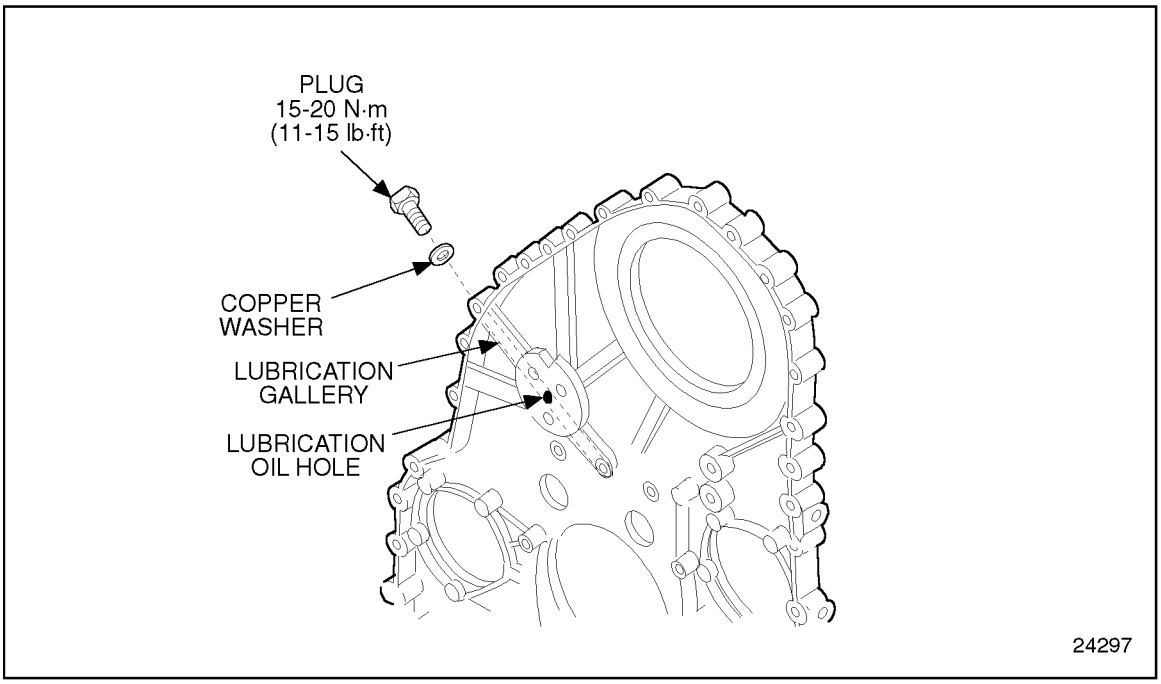

Figure 1-202 Adjustable Idler Gear Lubrication Gallery

 Copyright © 2004 DETROIT DIESEL CORPORATION

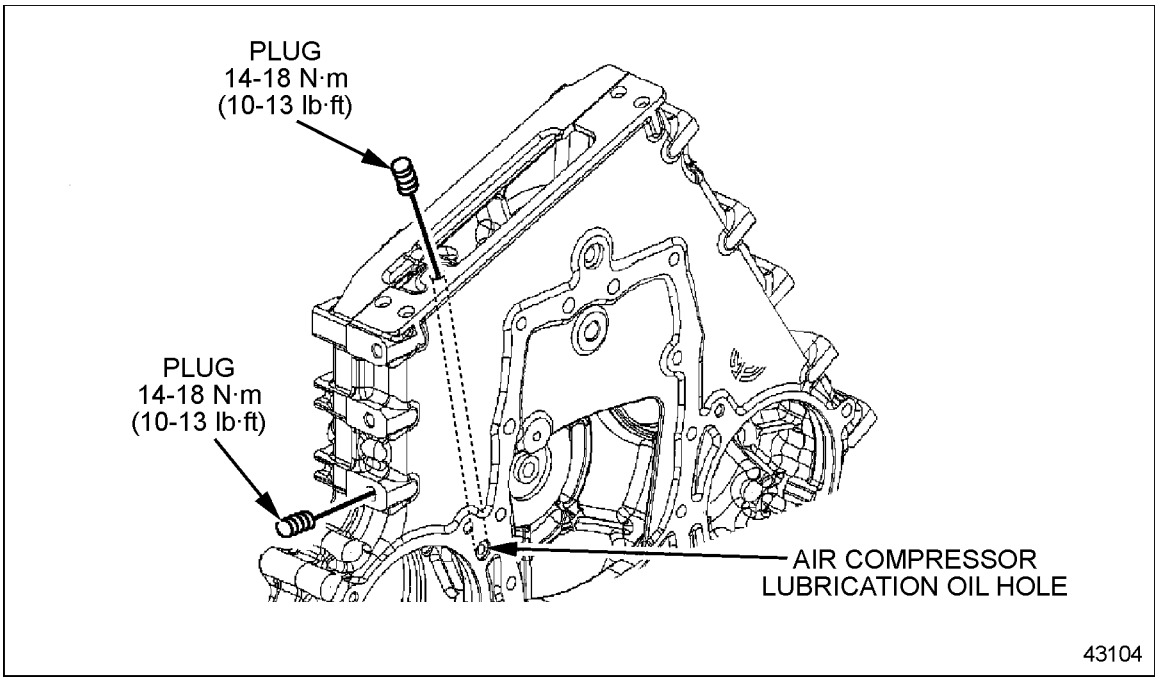

Figure 1-203 Air Compressor Lubrication Gallery

For the Series 60 2002 Engine there is a drilled oil passage in the gear case casting for lubrication of the air compressor. See Figure 1-203.

(Rev. 2004) *All information subject to change without notice.*
6SE483 0401 Copyright © 2004 DETROIT DIESEL CORPORATION

1.11.1 Repair or Replacement of Gear Case

To determine if repair is possible or replacement is necessary, perform the following procedure. See Figure 1-204.

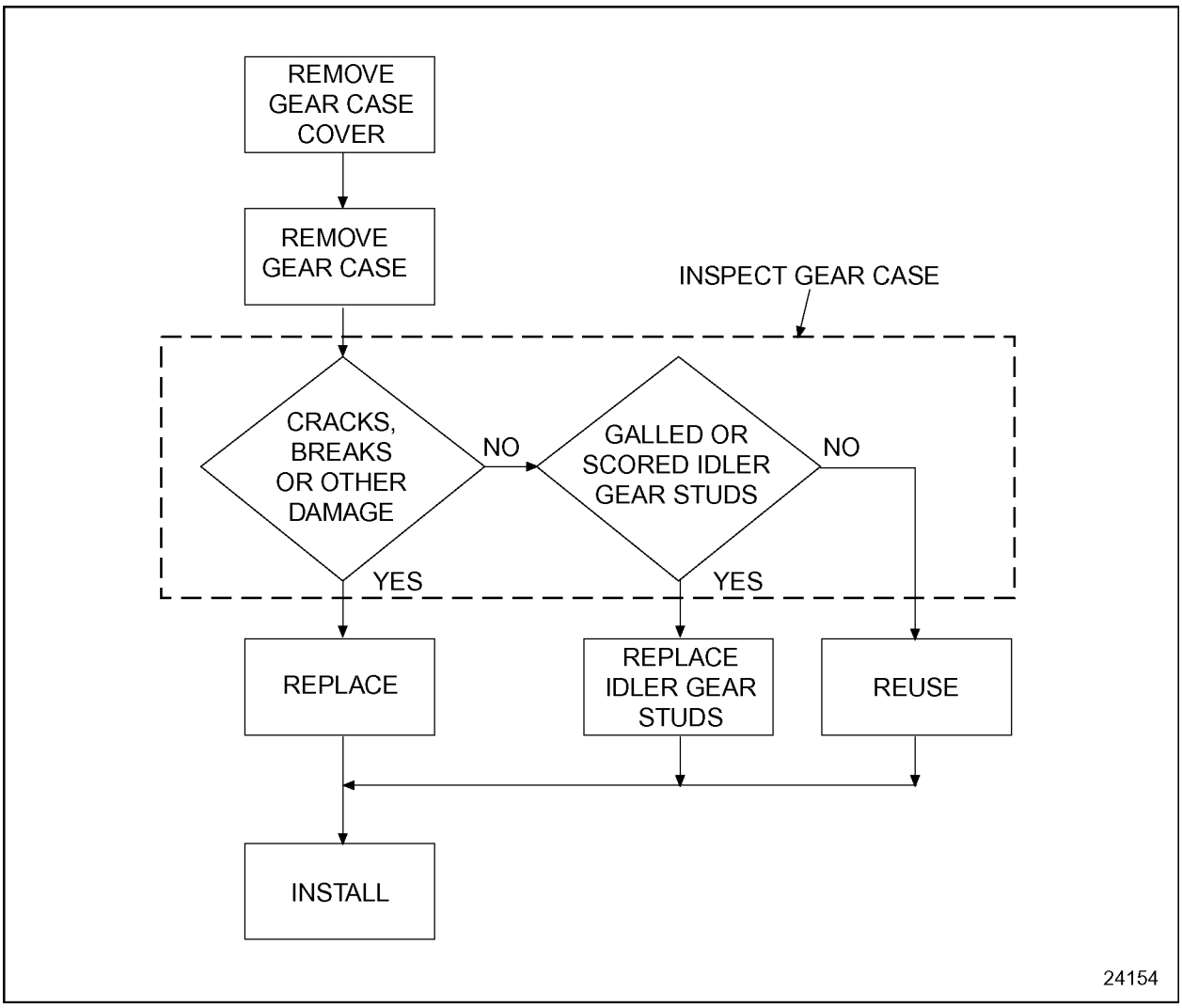

Figure 1-204 Flowchart for Repair or Replacement of Gear Case

 Copyright © 2004 DETROIT DIESEL CORPORATION

1.11.2 Removal of Gear Case

Perform the following steps to remove the gear case:

1. Remove the SRS. Refer to section 2.32.2.
2. Remove the TRS. Refer to section 2.33.2.
3. Remove the rocker arm assemblies. Refer to section 1.3.2.
4. On heat exchanger-cooled marine engines, remove the water-cooled charge air cooler. Refer to section 4.4.2. Or remove the heat exchanger tank. Refer to section 2.15.1.
5. Perform all of the steps for camshaft removal. Refer to section 1.24.2.
6. For Series 60 2002 Engine remove compact gear train assembly. Refer to section 1.23.
7. Remove the 3 bolts that secure the camshaft gear pilot tool, J 35906, to the gear case and remove the tool.
8. Remove the three bolts securing the former right side gear case stiffening bracket, or two bolts securing the current right side gear case stiffening bracket. See Figure 1-205.

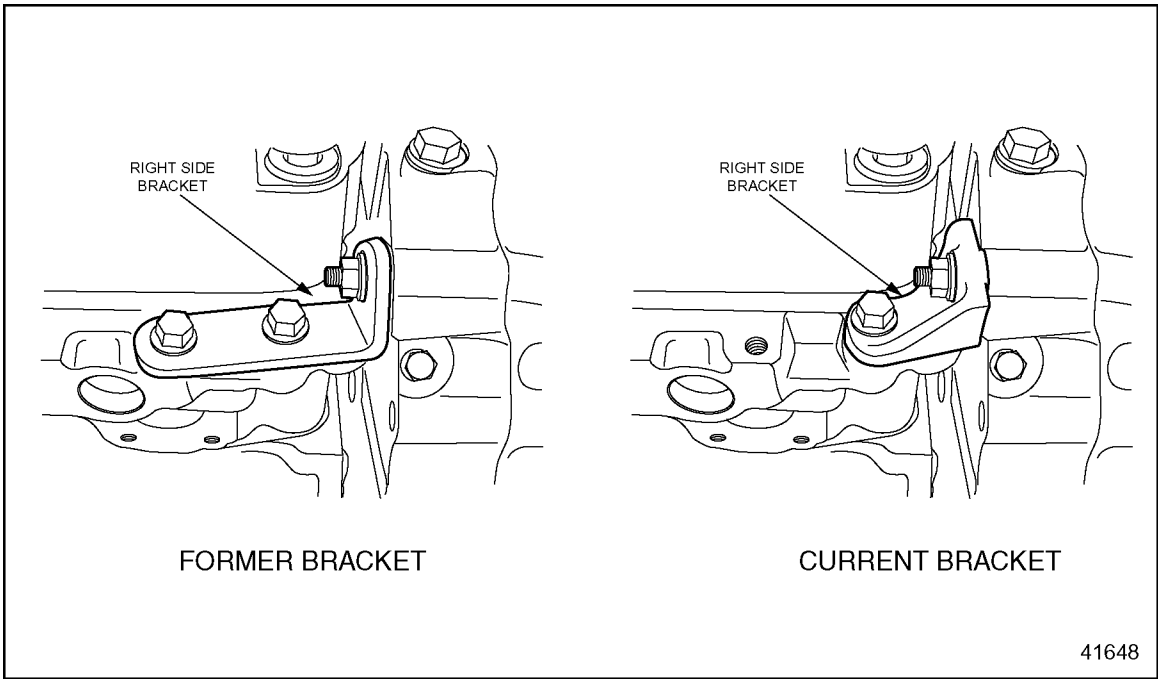

Figure 1-205 Gear Case Stiffening Bracket (Right Side)

(Rev. 2004) *All information subject to change without notice.*
6SE483 0401 Copyright © 2004 DETROIT DIESEL CORPORATION

9. Remove the three bolts securing the left side gear case stiffing bracket. See Figure 1-206

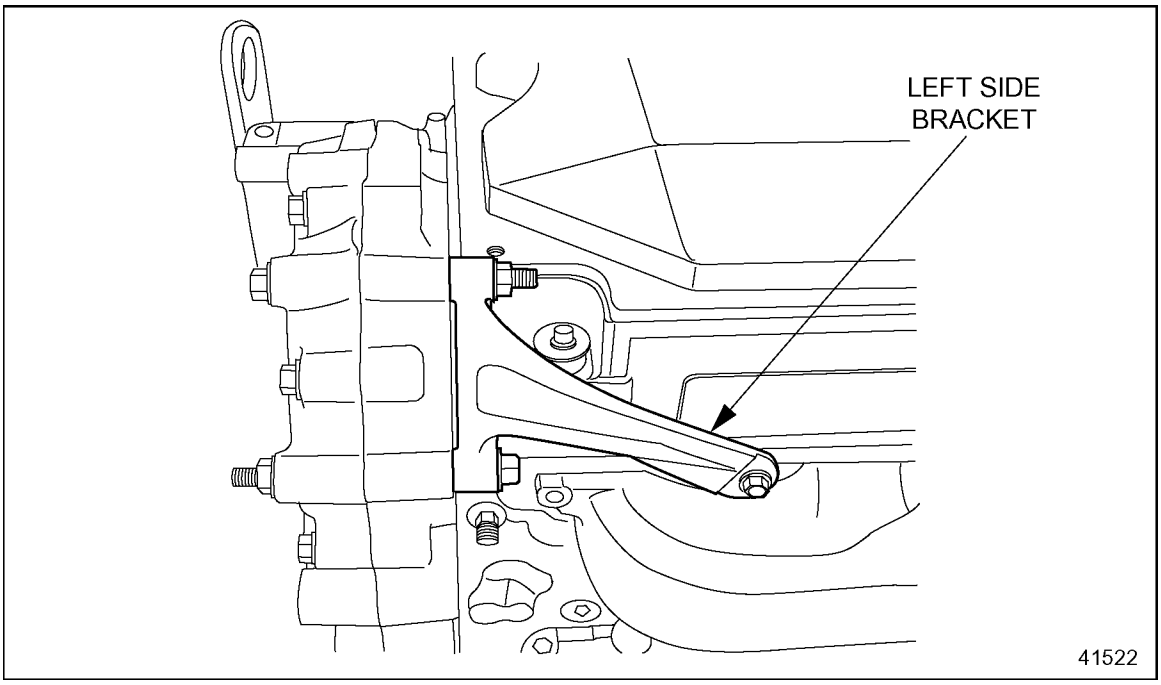

Figure 1-206 Gear Case Stiffening Bracket (Left Side)

10. Remove gear case cover. Refer to section 1.10.2, for step 1 through step 13. Supporting the gear case cover with a suitable lifting device, but don't remove it.
11. Remove the fuel pump from the fuel pump drive assembly (or air compressor). Refer to section 2.8.2.
12. Remove the air compressor. Refer to section 10.1.5.
13. Remove the air compressor drive assembly. Refer to section 10.3.2.

 Copyright © 2004 DETROIT DIESEL CORPORATION

14. Install the crankshaft protector, J 35994, to the oil seal contact area of the crankshaft. This will help to protect the crankshaft seal surface when removing the bull gear and camshaft idler gear assembly. See Figure 1-207.

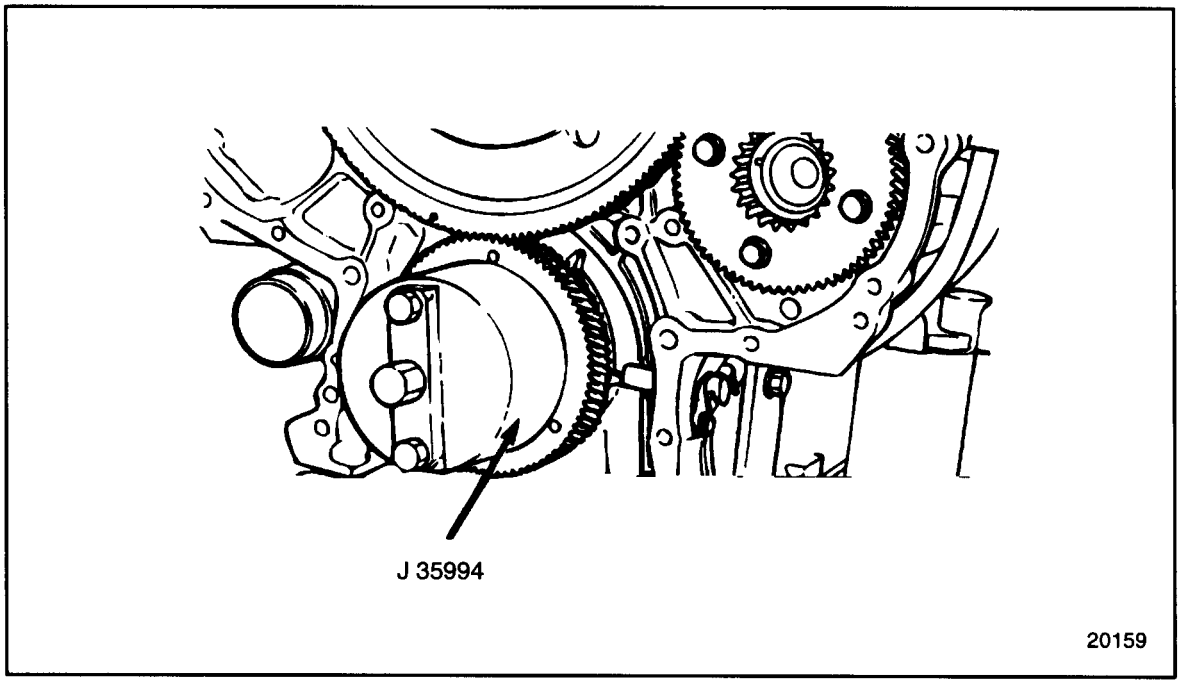

Figure 1-207 Crankshaft Protector Installation

15. Remove the bull gear and camshaft idler gear assembly from the engine. Refer to section 1.27.2.
16. Remove the adjustable idler gear assembly from the gear case. Refer to section 1.26.2.
17. Using a plastic hammer or fiber mallet, tap the rear face of the camshaft thrust plate to remove the thrust plate, camshaft drive gear hub and camshaft drive gear from the gear case.

(Rev. 2004) *All information subject to change without notice.*
6SE483 0401 Copyright © 2004 DETROIT DIESEL CORPORATION

18. Remove the 12 bolts that secure the gear case to the engine block. See Figure 1-208

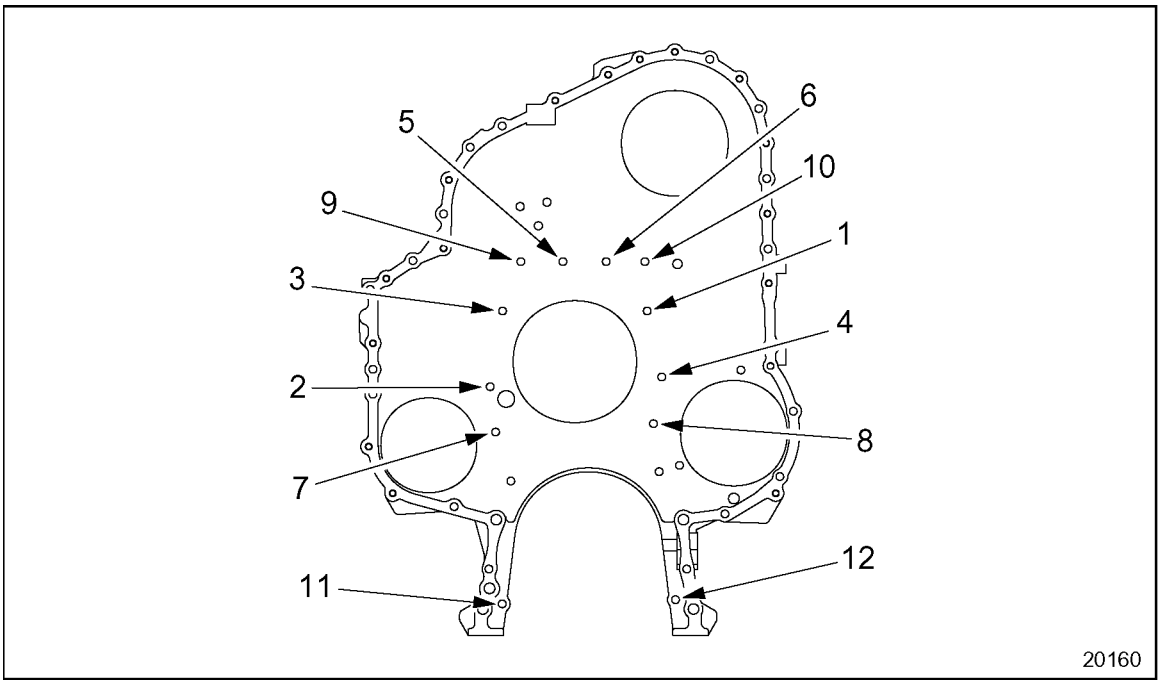

Figure 1-208 Gear Case Mounting Bolt Locations

For Series 60 2002 Engine remove bolts as follows:

 Copyright © 2004 DETROIT DIESEL CORPORATION

19. Remove fourteen bolts that secure gear case to engine block. See Figure 1-209.

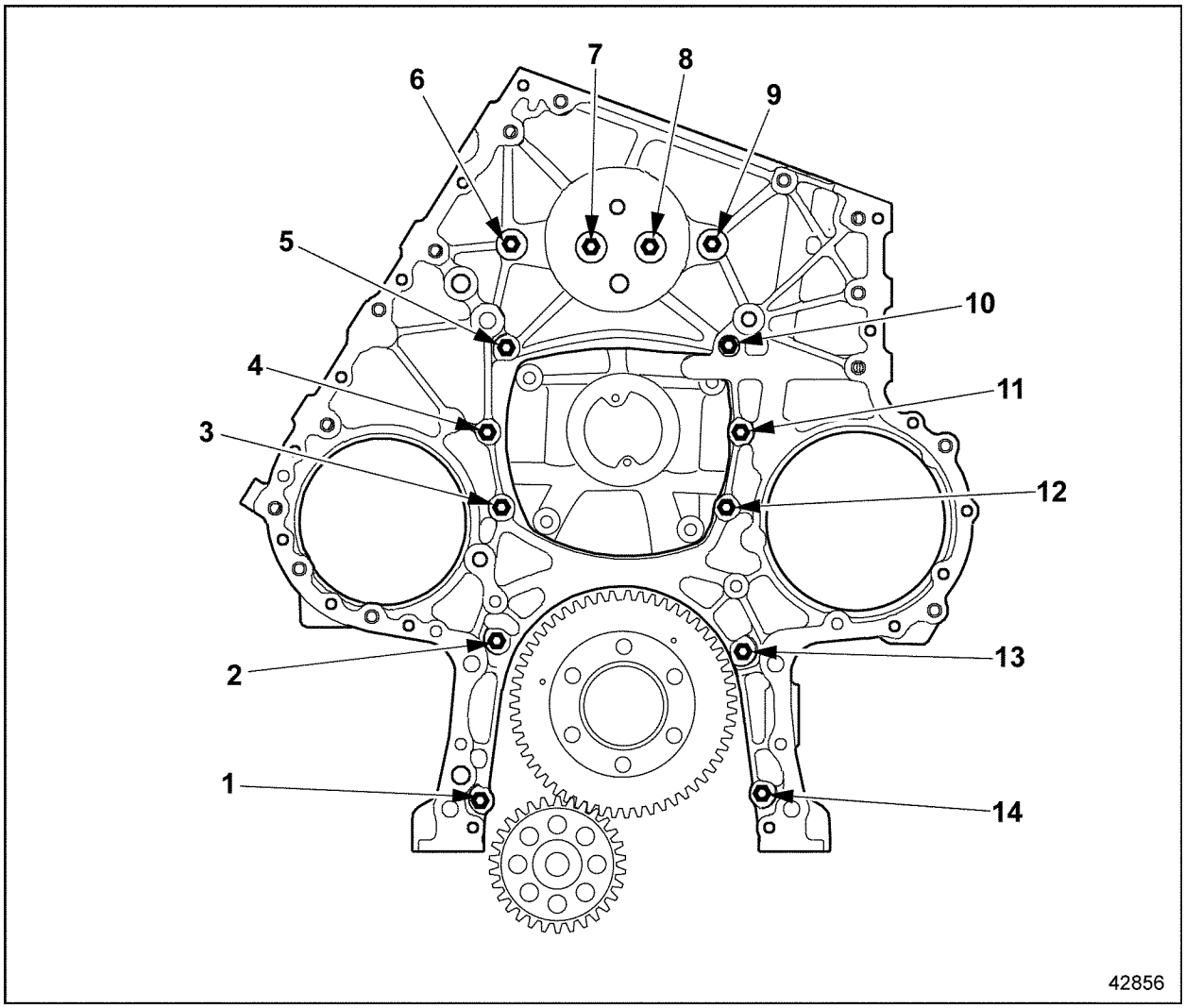

Figure 1-209 Gear Case Mounting Bolt Locations

(Rev. 2004) *All information subject to change without notice.*
6SE483 0401 Copyright © 2004 DETROIT DIESEL CORPORATION

20. Using a leather or cloth-wrapped strap, support the gear case. See Figure 1-210. For Series 60 2002 engines see Figure 1-211.

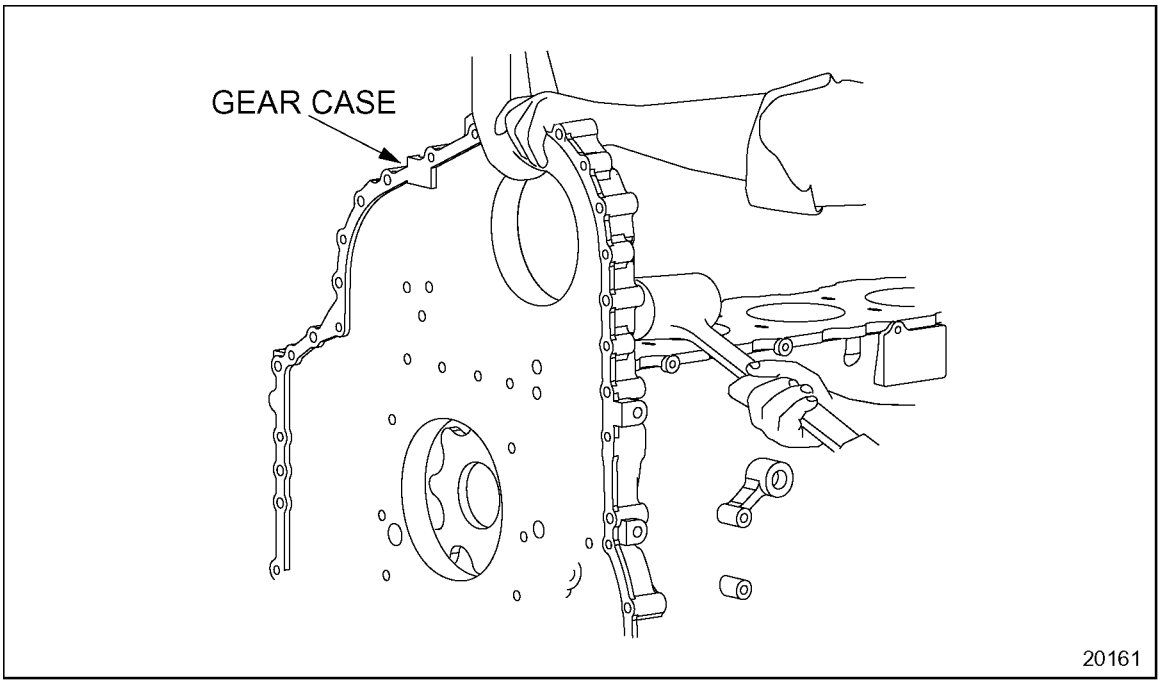

Figure 1-210 Gear Case Removal

 Copyright © 2004 DETROIT DIESEL CORPORATION

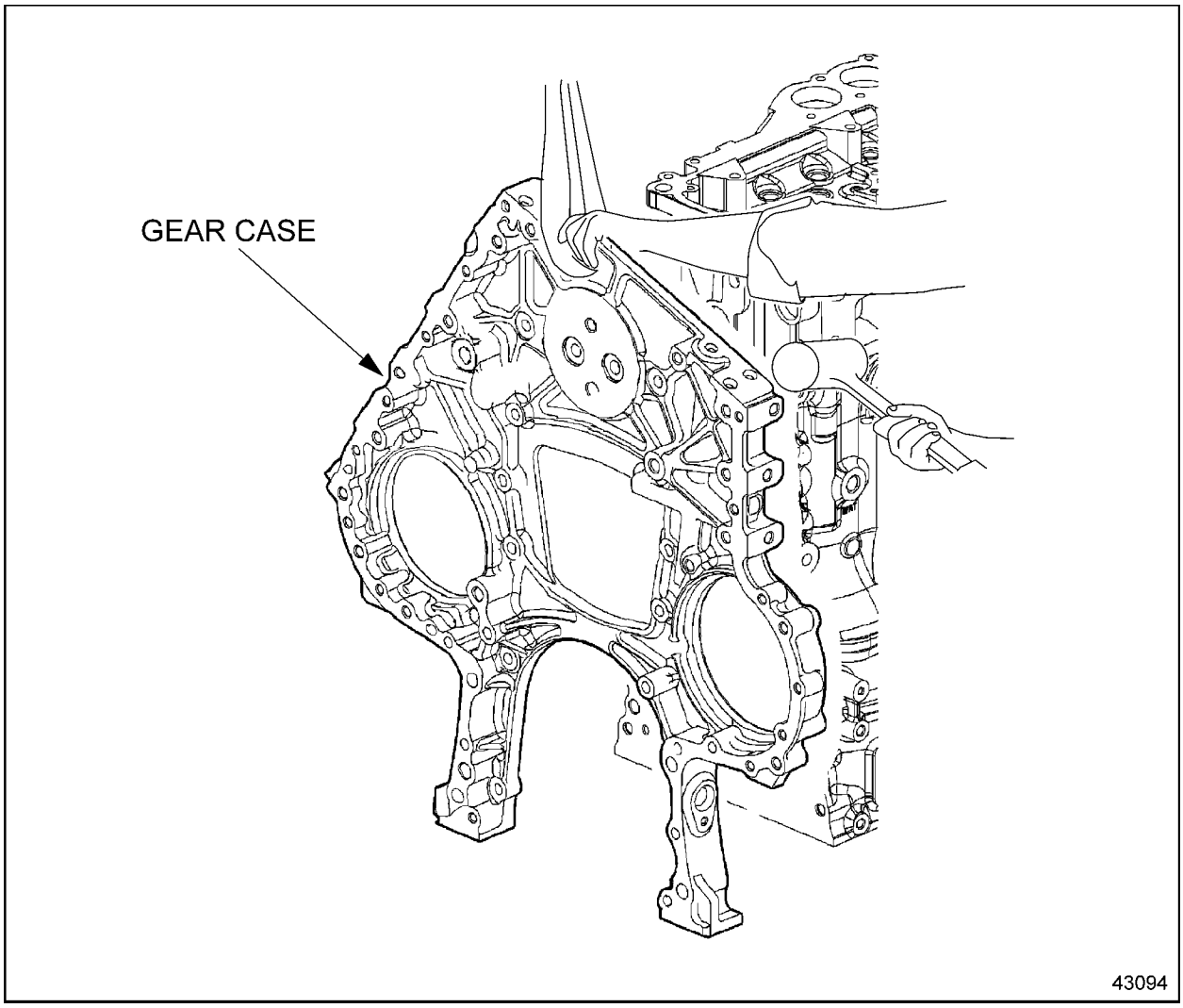

Figure 1-211 Series 60 2002 Gear Case Removal

21. Use a rubber hammer or plastic mallet to loosen the gear case from the cylinder block dowels.

(Rev. 2004) *All information subject to change without notice.*
6SE483 0401 Copyright © 2004 DETROIT DIESEL CORPORATION

1.11.2.1 Inspection of Gear Case

Clean all of the old gasket sealer from the mating surfaces of the gear case, gear case cover, and engine block. Refer to "Gasket Eliminator Removal," in the "General Information" section at the beginning of this manual. Clean the gasket material from the mating surfaces of any components or access covers that were removed from the gear case cover or gear case. Clean all of the parts with clean fuel oil and dry with compressed air. Remove the oil gallery plug at the edge of the gear case. See Figure 1-202.

CAUTION:

To avoid injury from flying debris when using compressed air, wear adequate eye protection (face shield or safety goggles) and do not exceed 40 psi (276 kPa) air pressure.

Use compressed air to ensure the oil gallery is completely free of blockage. If necessary, use a wire brush to clean the gear case oil gallery.

Inspect the gear case for stress cracks, breaks, or other damage. Repair or replace as necessary. Inspect the adjustable idler gear studs for signs of galling or scoring. Replace as necessary. Inspect all the individual components as outlined under the appropriate section.

 Copyright © 2004 DETROIT DIESEL CORPORATION

1.11.3 Installation of Gear Case

Use the following instructions for gear case installation:

1. Apply a thin film of gasket eliminator PT-7276 (Loctite® 518) or equivalent to the cylinder block. See Figure 1-212. Carefully smooth the bead around the block-to-gear case oil passage to avoid contamination.

NOTE:
The installation of Gasket Eliminator to the gear case-to-block mating surfaces at the top of the block is critical. Excess gasket eliminator material can extrude into the oil passage between the block and gear case, causing early failure of components. In addition, the bull gear recess area MUST be cleaned of any and all foreign material after installation of the gear case to the engine block.

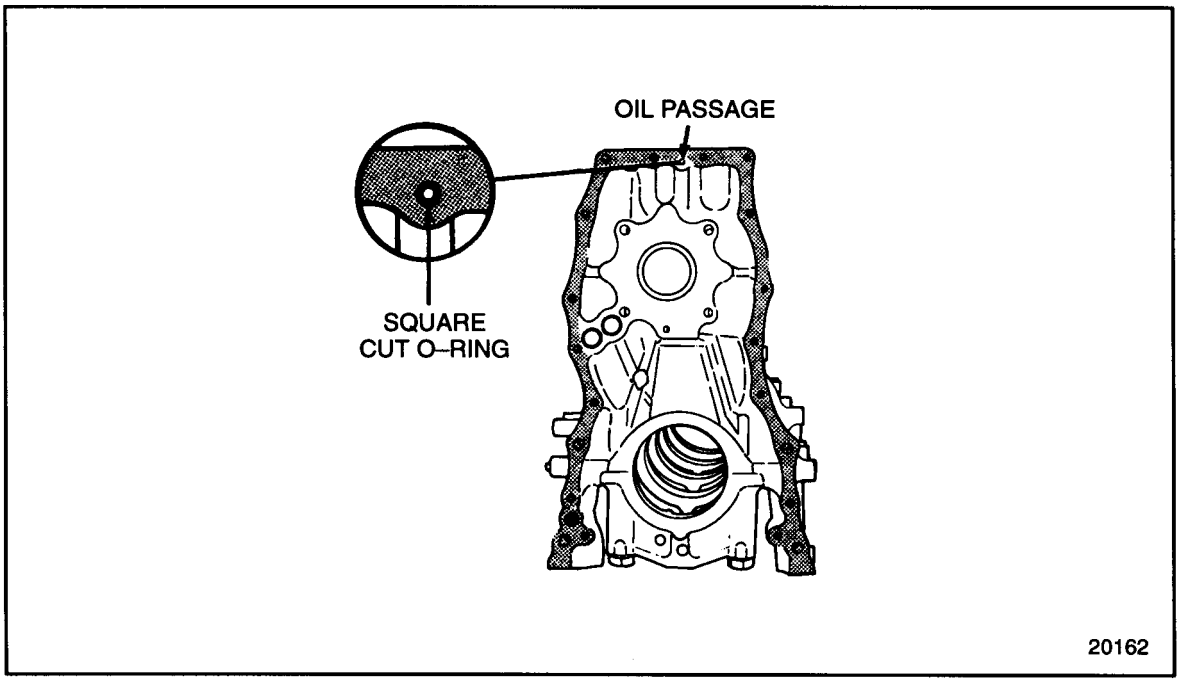

Figure 1-212 Gasket Eliminator Application

(Rev. 2004) *All information subject to change without notice.*
6SE483 0401 Copyright © 2004 DETROIT DIESEL CORPORATION

2. Insert gear case alignment plug, J 35651, into the bull gear and camshaft idler gear hub recess in the cylinder block. See Figure 1-213.

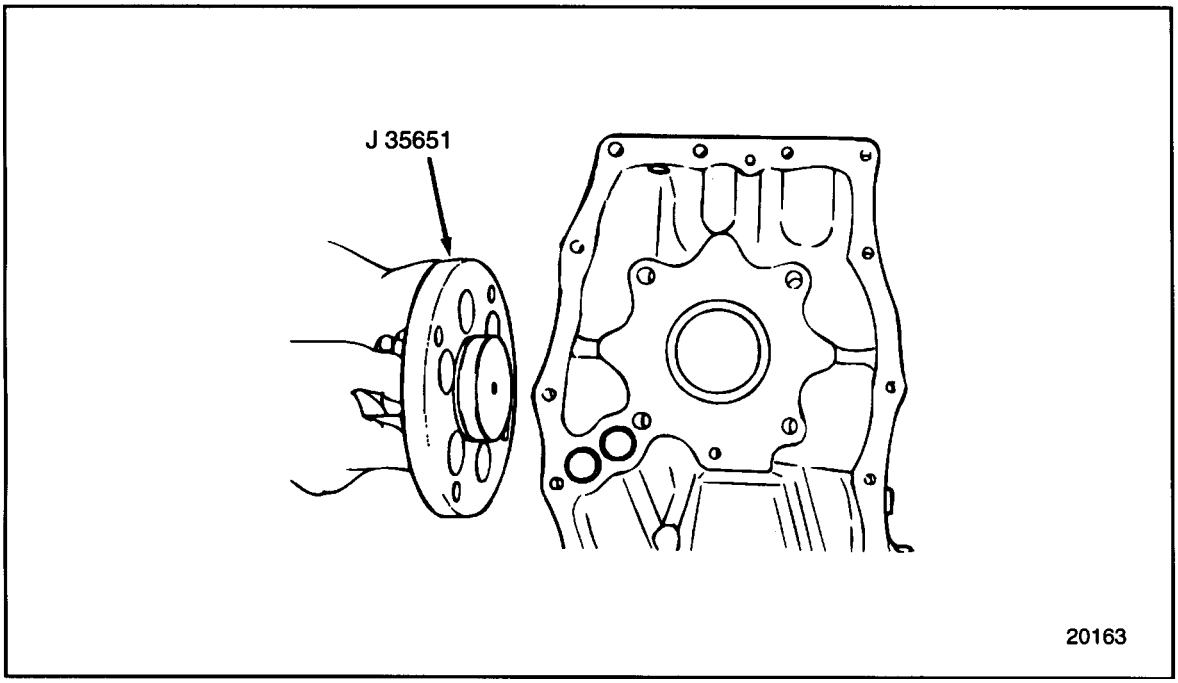

Figure 1-213 Gear Case Alignment Plug

 Copyright © 2004 DETROIT DIESEL CORPORATION

3. Using a suitable lifting sling made of cloth or leather, position the bull gear and camshaft idler gear opening of the gear case over the gear case alignment plug. Index the hole in the gear case mating surface with the diamond dowel at the lower left corner of the cylinder block. See Figure 1-214.

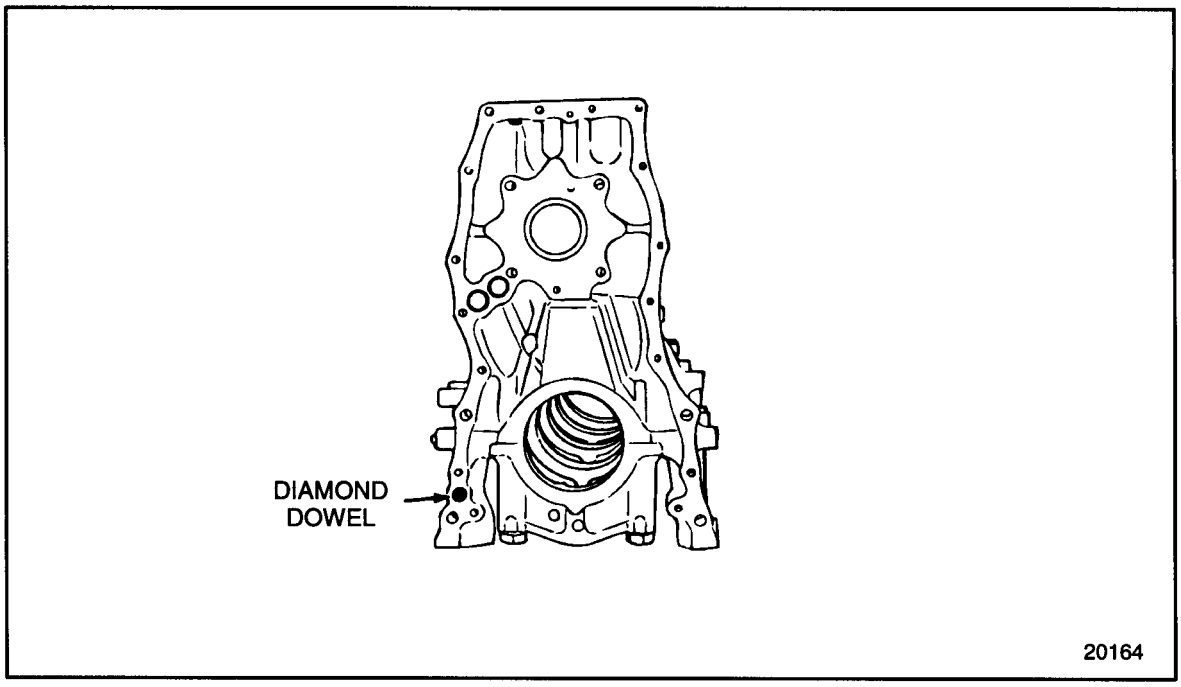

Figure 1-214 Cylinder Block Locating Diamond Dowel

(Rev. 2004) *All information subject to change without notice.*
6SE483 0401 Copyright © 2004 DETROIT DIESEL CORPORATION

4. With the gear case alignment plug fully seated, the gear case centered on the alignment plug and the diamond dowel in the cylinder block indexed with its mating hole in the gear case, the gear case is positioned properly for bolt installation. See Figure 1-215.

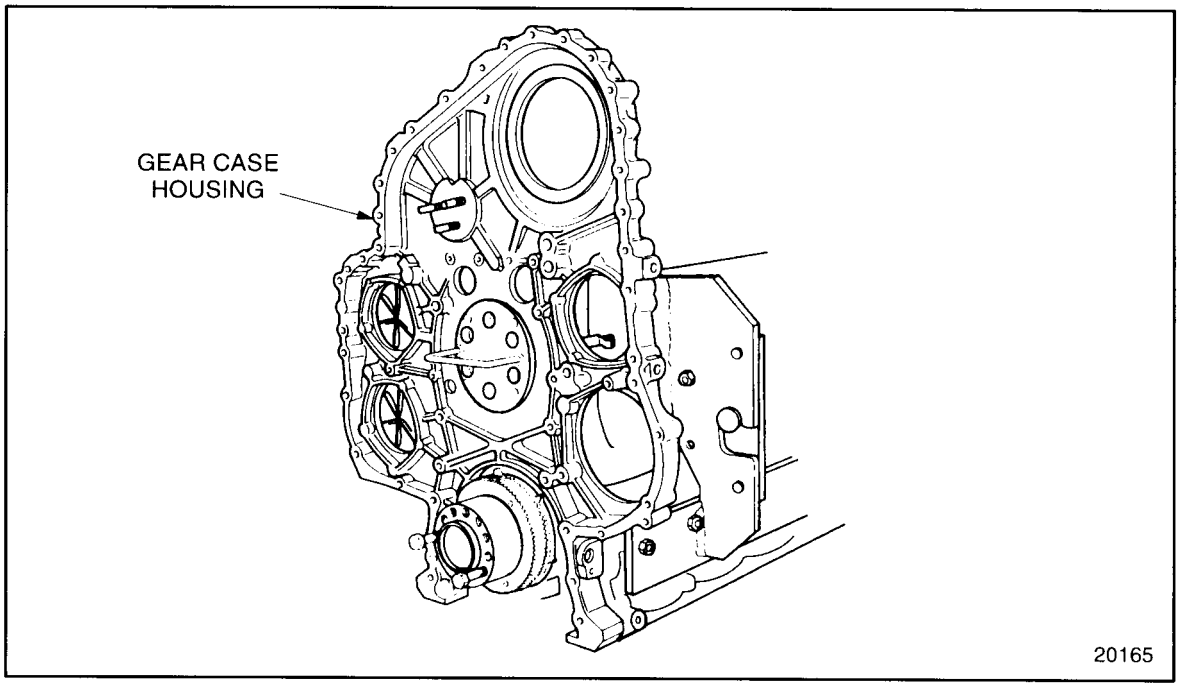

Figure 1-215 Gear Case Positioning

NOTE:
Gasket Eliminator cures with the absence of air. The time between the installation of the gear case, and torquing of the bolts that secure the gear case to the cylinder block should be kept to a minimum.

 Copyright © 2004 DETROIT DIESEL CORPORATION

5. Install the 12 gear case-to-cylinder block retaining bolts, finger-tight.
6. Torque the gear case-to-cylinder block bolts to 58-73 N·m (43-54 lb·ft). See Figure 1-216.

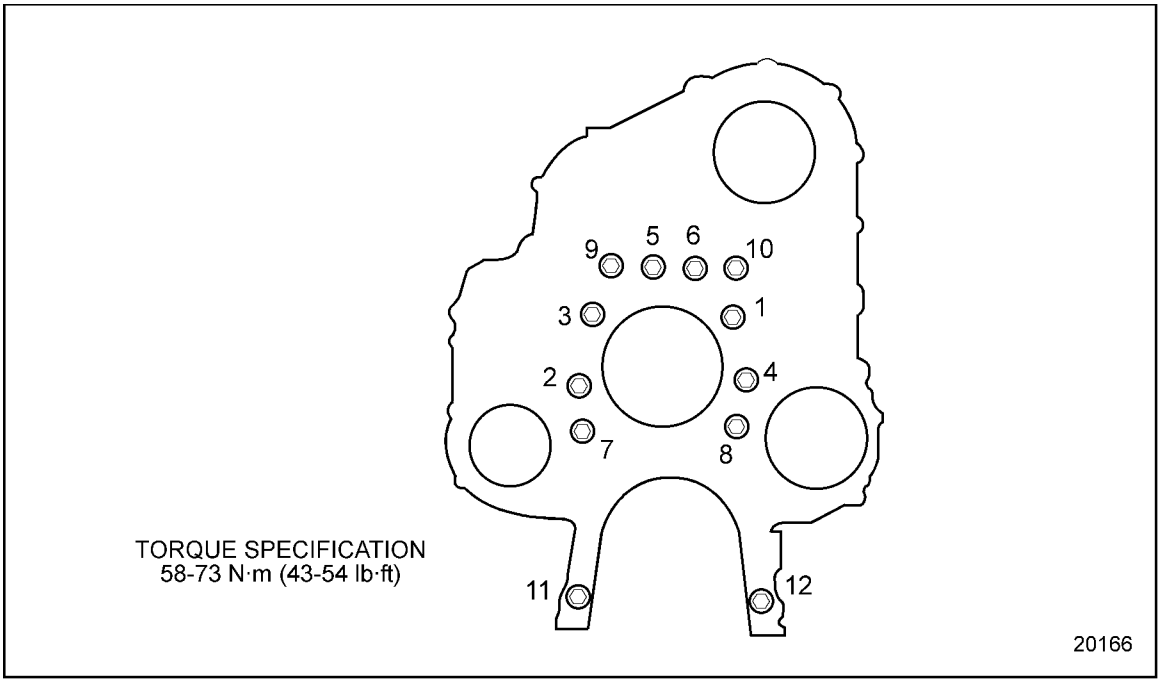

Figure 1-216 Gear Case Housing Bolt Torque Sequence

For Series 60 2002 Engine install gear case as follows:

(Rev. 2004) *All information subject to change without notice.*
6SE483 0401 Copyright © 2004 DETROIT DIESEL CORPORATION

7. There are 14 bolts that secure the gear case to engine block. For bolt torque and torque sequence see Figure 1-217.

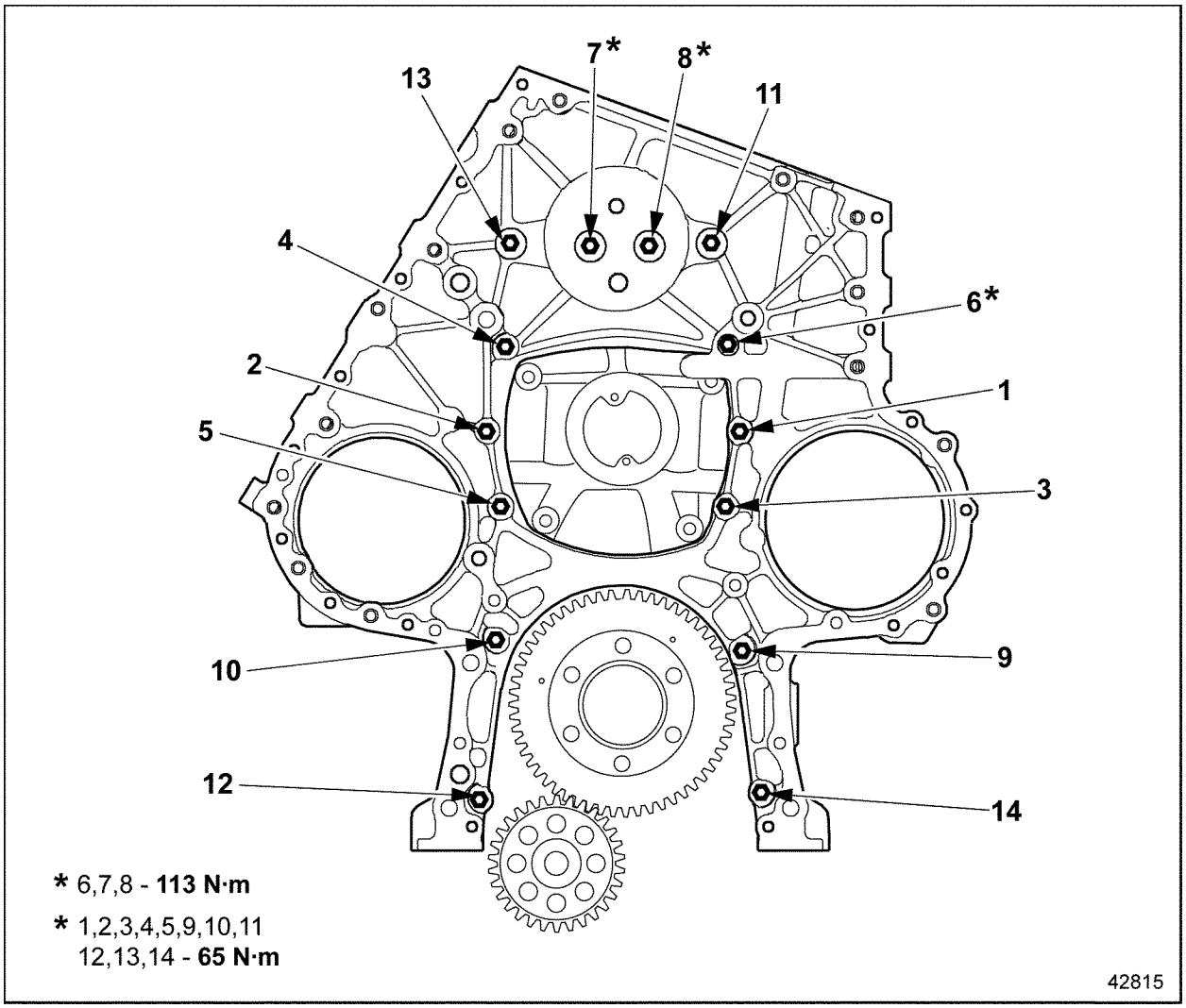

Figure 1-217 Gear Case Torque Sequence for Series 60 2002 Engine

8. Remove the gear case alignment plug from the gear case.
9. Install the air compressor. Refer to section 10.1.8.
10. Install the air compressor drive assembly. Refer to section 10.3.6.
11. Install the fuel pump drive assembly to the gear case, if so equipped. Refer to section 2.8.5 or refer to section 2.8.6.
12. Install the fuel pump to the fuel pump drive assembly (or air compressor). Refer to section 2.9.3.

NOTE:
For 1991 and later model year engines, refer to section 4.2.8or refer to section 4.3.7 and install the water pump assembly.

 Copyright © 2004 DETROIT DIESEL CORPORATION

13. Lubricate the rubber O-ring on the camshaft thrust plate with clean engine oil. Install the camshaft thrust plate assembly, with the camshaft drive gear and hub in place to the gear case, using a plastic hammer or fiber mallet to tap the thrust plate rearward in the gear case just enough to start it in the gear case. See Figure 1-218.

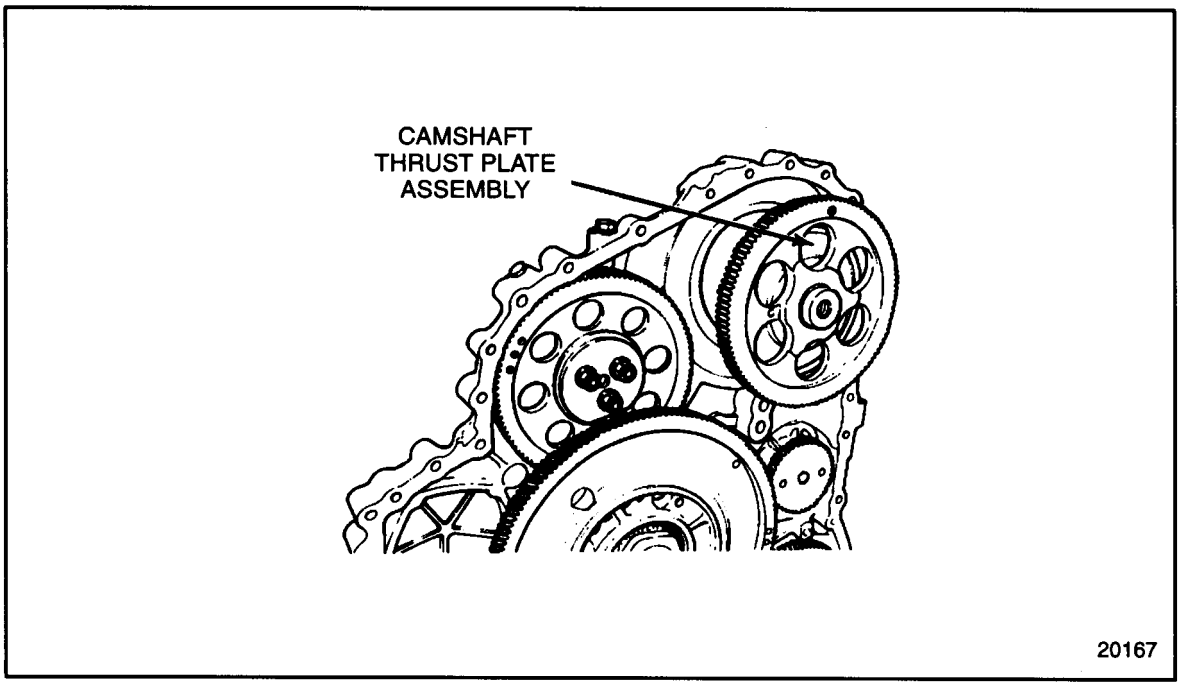

Figure 1-218 Camshaft Thrust Plate Installation

(Rev. 2004) *All information subject to change without notice.*
6SE483 0401 Copyright © 2004 DETROIT DIESEL CORPORATION

14. Install the adjustable idler gear assembly to the gear case. Refer to section 1.26.3. Align the timing marks of the adjustable idler gear and camshaft drive gear. See Figure 1-219.

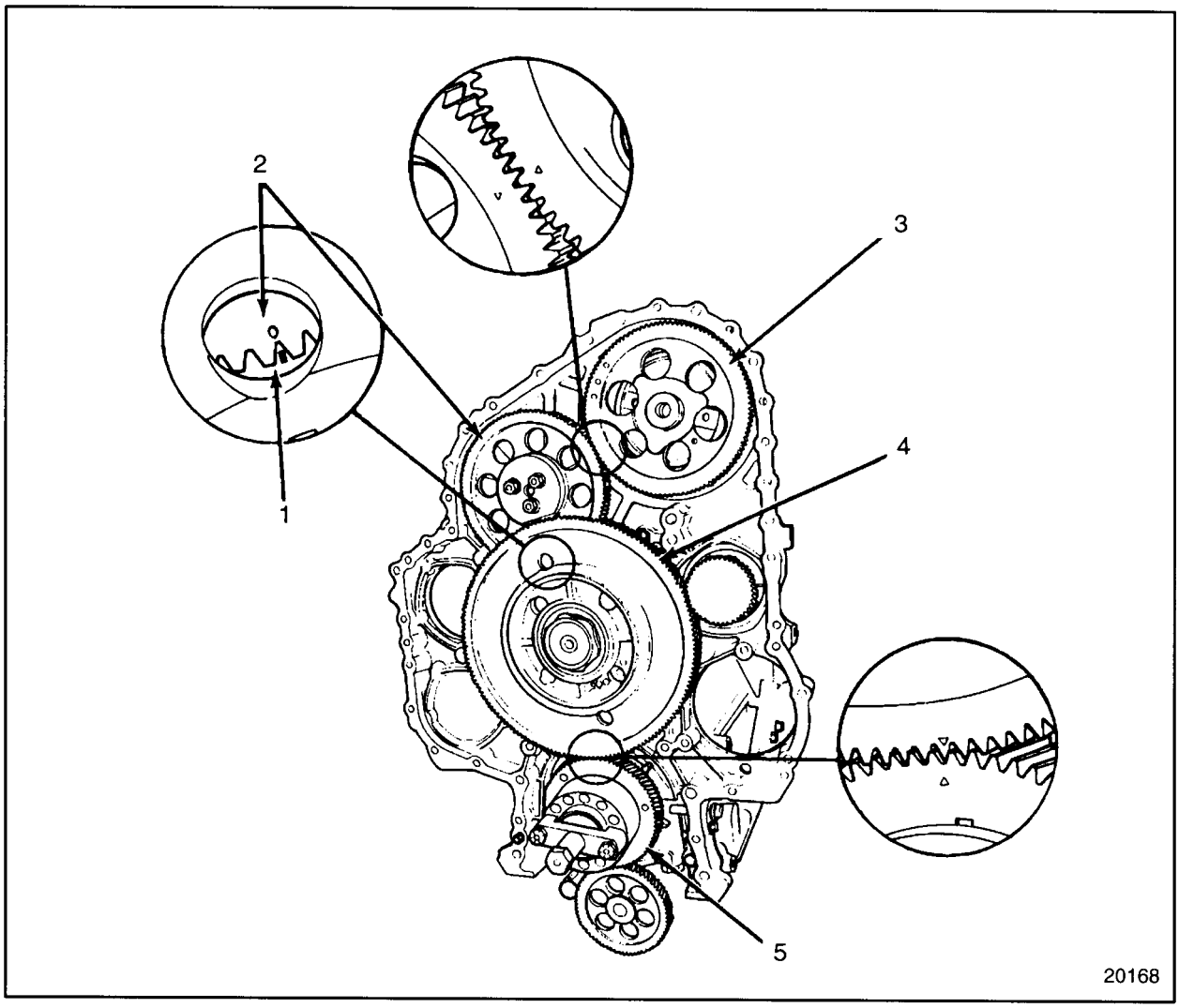

1. Camshaft Idler Gear
2. Adjustable Idler Gear
3. Camshaft Drive Gear
4. Bull Gear
5. Crankshaft Timing Gear

Figure 1-219 Engine Gear Train Timing Marks

15. Inspect the bull gear and camshaft idler gear access opening in the gear case and remove any foreign material.

 Copyright © 2004 DETROIT DIESEL CORPORATION

16. Install two bull gear guide studs, J 35785 to the cylinder block. See Figure 1-220.

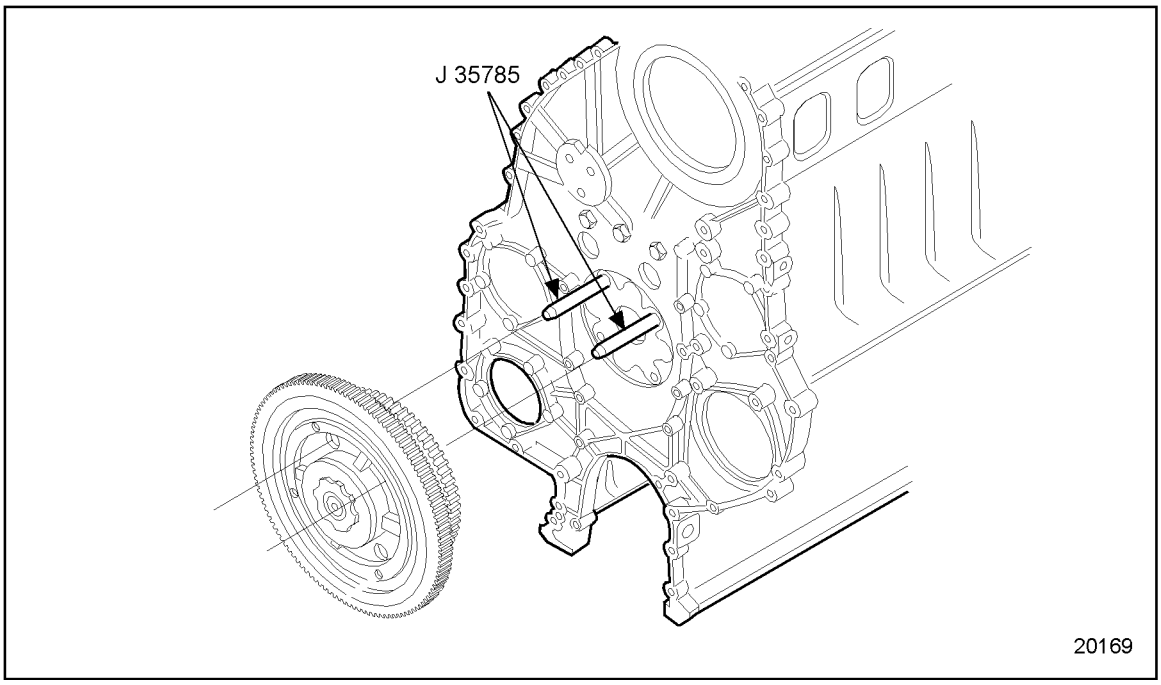

Figure 1-220 Bull Gear Guide Stud Installation

NOTICE:
Always install crankshaft protector when installing the bull gear and camshaft idler gear assembly to prevent damaging the crankshaft oil seal contact surface.

17. Install the crankshaft protector, J 35994 to the oil seal contact area of the crankshaft. This will help to protect the crankshaft seal surface when installing the bull gear and camshaft idler gear assembly.
18. Install the bull gear and camshaft idler gear assembly to the guide studs. Align the timing marks on the bull gear and the crankshaft timing gear and the camshaft idler gear and adjustable idler gear; see Figure 1-219, and slide the bull gear and camshaft idler gear assembly forward to seat it in the recess in the gear case and cylinder block.
19. Working through the lightening holes in the bull gear, install two of the bull gear assembly mounting bolts through the hub and into the cylinder block. Finger-tighten the bolts.
20. Remove the two bull gear guide studs. Install the remaining two bull gear assembly mounting bolts. Torque the bolts to 101-126 N·m (75-93 lb·ft). Tighten in a clockwise sequence.
21. Check the timing marks on the gears to ensure the gear train is properly timed. See Figure 1-219.

(Rev. 2004) *All information subject to change without notice.*
6SE483 0401 Copyright © 2004 DETROIT DIESEL CORPORATION

22. Perform the following:

    [a] For crankshaft timing gear-to-oil pump gear lash measurement. Perform step 2, refer to section 1.22.2.1.

    [b] For crankshaft timing gear-to bull gear lash measurement. Perform step 3, refer to section 1.22.2.1.

    [c] To install the gear case cover. Refer to section 1.10.3.

    [d] Install the two bolts and nuts securing the left side gear case stiffening bracket to the gear case. Torque to 75–81 N·m (55–60) lb·ft). See Figure 1-221

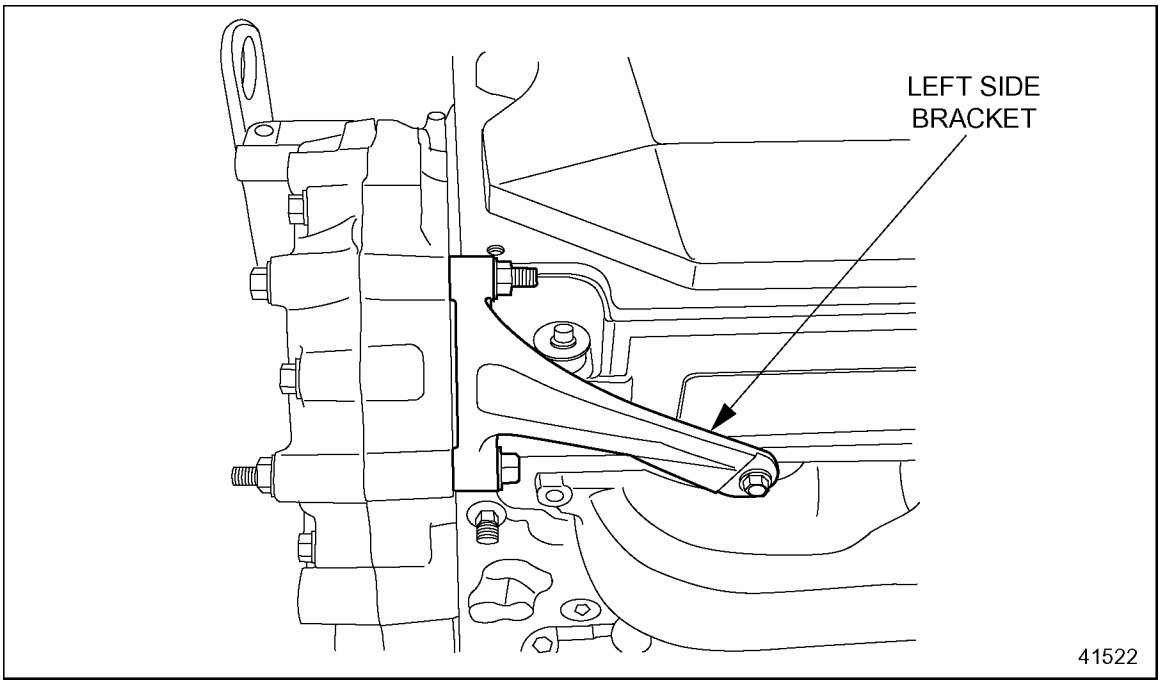

Figure 1-221 Gear Case Stiffening Bracket (Left Side)

    [e] Install the bolt securing the left side gear case stiffening bracket to the cylinder head. Torque to 58–73 N·m (43–54 lb·ft). See Figure 1-221

    [f] Install the bolt securing the right side gear case stiffening bracket to the gear case. Torque the former bracket bolt to 58–73 N·m (43–54 lb·ft) or torque the current gear case bracket bolt to 74–81 N·m (53–60 lb·ft). See Figure 1-222

NOTE:
Bolts attaching bracket to the gear case are torqued first, then the bolt to cylinder head is torqued next.

    [g] Install the two bolts securing the former right side gear case stiffening bracket to the cylinder head or one bolt securing the current right side bracket. Torque the former

 Copyright © 2004 DETROIT DIESEL CORPORATION

bracket bolts to 58–73 N·m (43–54 lb·ft) or torque the current gear case bracket bolt to 74–81 N·m (53–60 lb·ft). See Figure 1-222

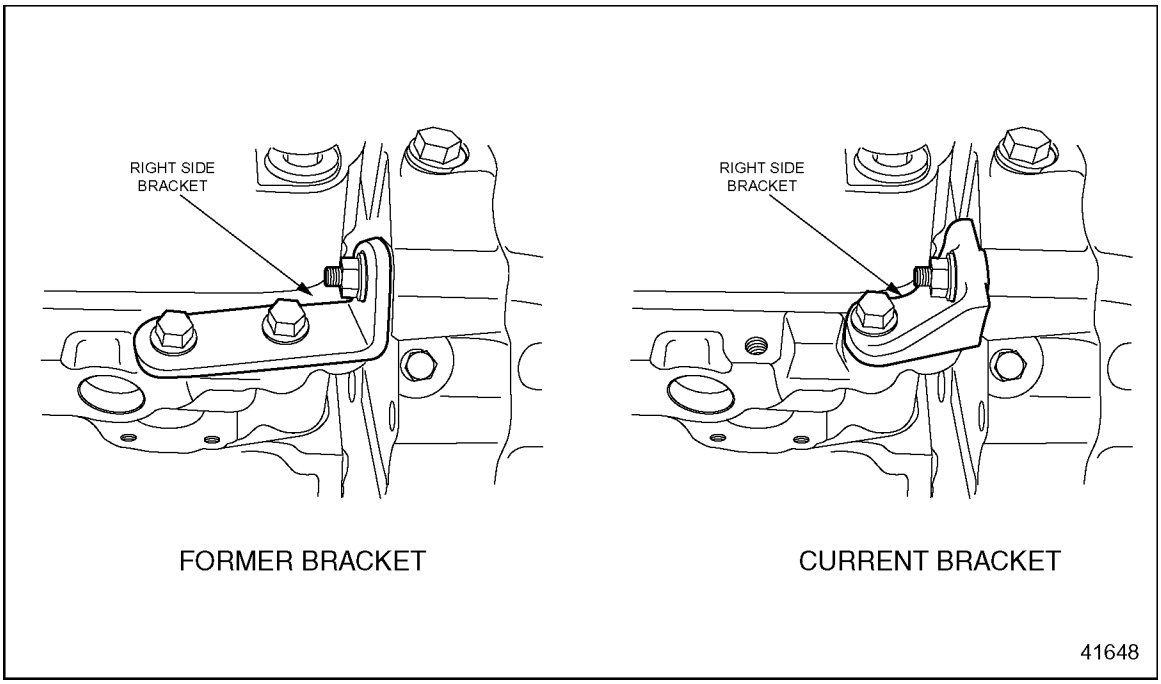

Figure 1-222 Gear Case Stiffening Bracket (Right Side)

23. Refer to section 1.24.5, "Installation of Camshaft Bearing" and perform the necessary steps.
24. For bull gear-to-accessory drive gear lash measurement, perform step 11. Refer to section 1.22.2.1.
25. Continue engine assembly.

(Rev. 2004) *All information subject to change without notice.*
6SE483 0401 Copyright © 2004 DETROIT DIESEL CORPORATION

1.12 CRANKSHAFT VIBRATION DAMPER

A viscous type vibration damper is mounted on the front end of the crankshaft to reduce torsional vibrations to a safe value. See Figure 1-223.

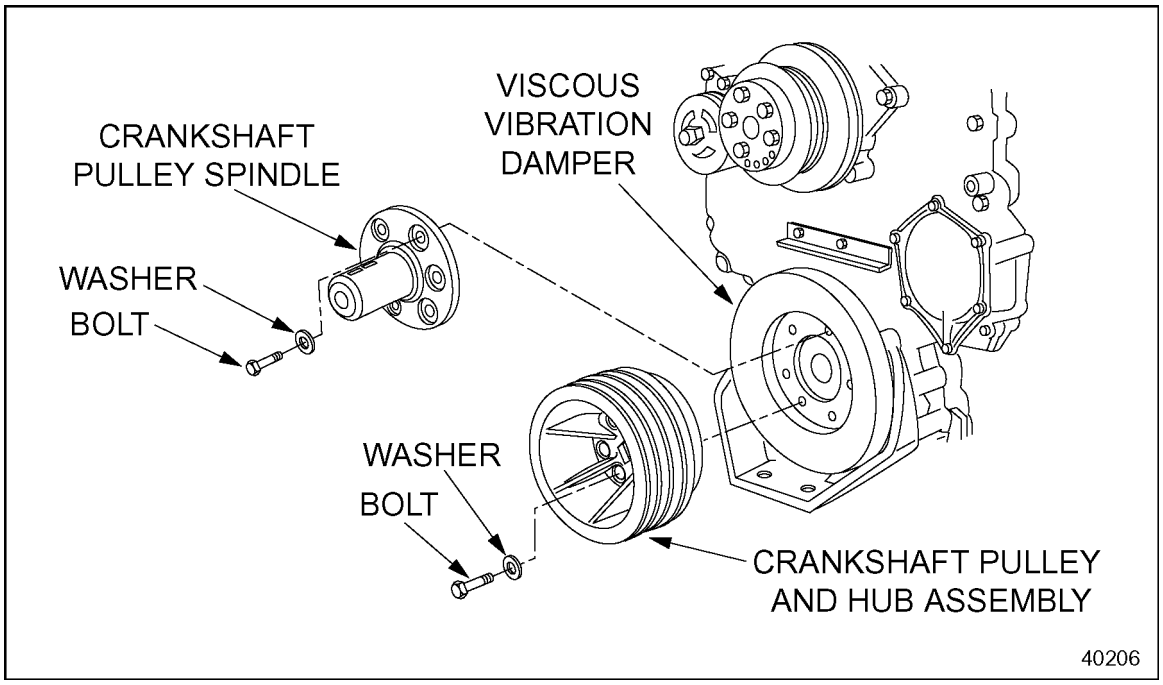

Figure 1-223 Viscous Vibration Damper Mounting with Crankshaft Pulley or Crankshaft Pulley and Hub Assembly with Spindle

Prior to April 1993, 11.1 liter engines with less than 320 hp (238 kW) were equipped with a 313.4 mm (12.34 in.) damper and 11.1 liter engines with 320 hp (238 kW) or more were equipped with a 342.9 mm (13.5 in.) damper, and all 12.7 liter engines, were equipped with a 342.9 mm (13.5 in.) damper.

Beginning in April 1993, all Series 60 engines are built with a 342.9 mm (13.5 in.) damper.

 Copyright © 2004 DETROIT DIESEL CORPORATION

The viscous damper assembly consists of a sealed outer shell, an internal flywheel and a quantity of highly viscous fluid. See Figure 1-224.

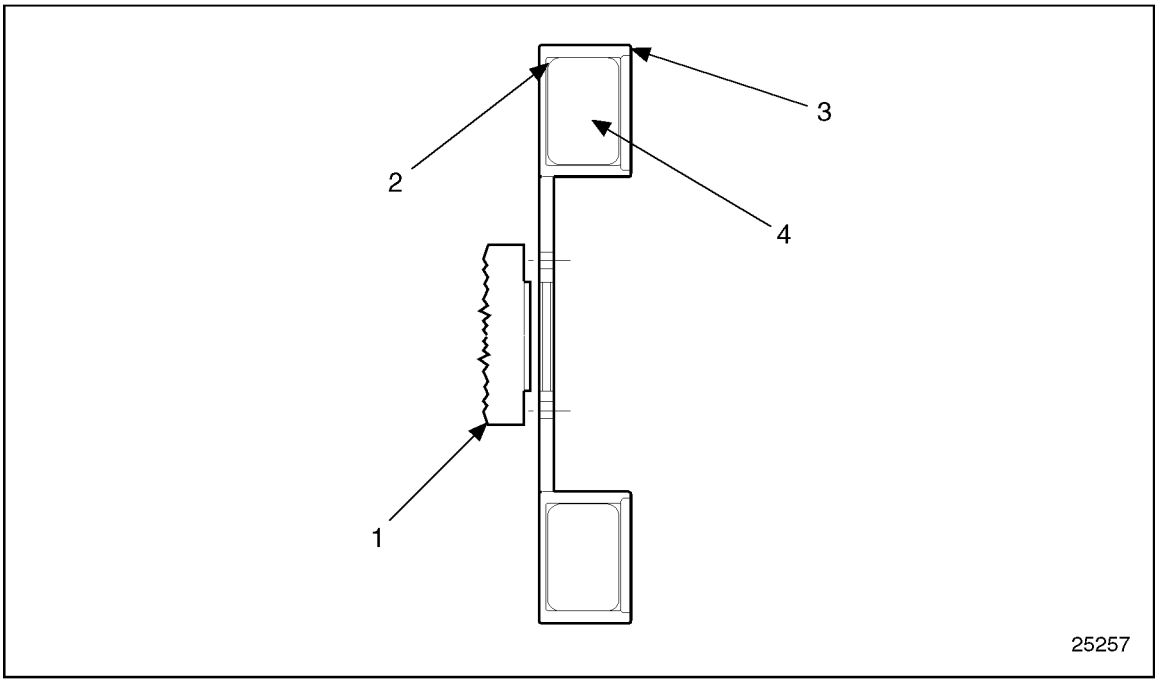

1. Crankshaft
2. Viscous Fluid
3. Damper Shell
4. Internal Flywheel

Figure 1-224 Viscous Vibration Damper Detail

(Rev. 2004) *All information subject to change without notice.*
6SE483 0401 Copyright © 2004 DETROIT DIESEL CORPORATION

A vibration damper safety shield is recommended in industrial and marine applications in which the engine operates without a hood or other protective covering in an open or unprotected area.

A properly designed and installed safety shield protects the damper from damage, prevents direct physical contact with the damper during engine operation, and significantly reduces the potential for damper-related personal injury.

Detroit Diesel Corporation does not manufacture, sell or install vibration damper safety shields due to the wide variety of installations in which Detroit Diesel engines are applied. Space restrictions in these numerous applications make it necessary to design an appropriate type of shield for each installation.

The responsibility for designing and installing properly shaped and constructed safety shields, therefore, rests with the OEM (Original Equipment Manufacturer), distributor, or other fabricator designing or manufacturing products in which they apply Detroit Diesel engines.

During operation, the outer shell, which is firmly attached to the crankshaft, turns at the same speed as the crankshaft, its motion being transferred to the flywheel through the fluid within the shell. Since "fluid-drive" is more or less inefficient with frequent speed changes, considerable flywheel slippage will take place as the power impulses are transmitted through the crankshaft. In this type of operation, the slippage is desirable since the acceleration and deceleration of the flywheel in the damper lessens the vibration amplitude, reducing its effects to a level harmless to the engine.

 Copyright © 2004 DETROIT DIESEL CORPORATION

1.12.1 Repair or Replacement of Crankshaft Vibration Damper

To determine if repair is possible or replacement is necessary, perform the following procedure. See Figure 1-225.

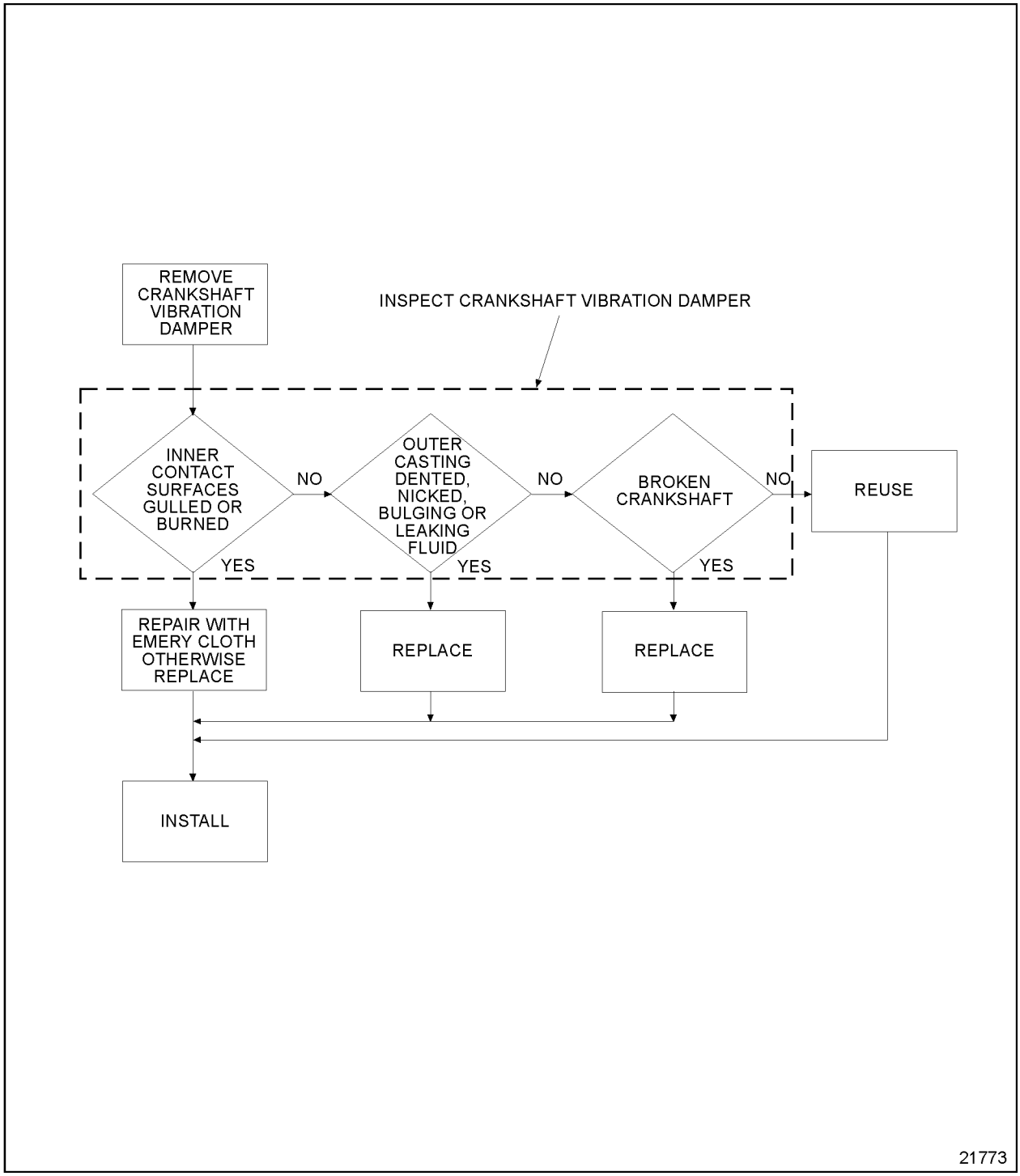

Figure 1-225 Flowchart for Repair or Replacement of Crankshaft Damper

(Rev. 2004) *All information subject to change without notice.*
6SE483 0401 Copyright © 2004 DETROIT DIESEL CORPORATION

1.12.2 Cleaning and Removal of Crankshaft Vibration Damper

Precleaning is not necessary.

CAUTION:

To avoid injury from the projection of tools or other objects that may fall on or behind the vibration damper of an engine, always check and remove these items before starting the engine.

Remove crankshaft vibration damper as follows:

1. Remove the drive belts from the crankshaft pulley. Refer to section 13.13.10.
2. Remove the inspection plug in the bottom of the flywheel housing and install the flywheel lock, J 36375–A. See Figure 1-226.

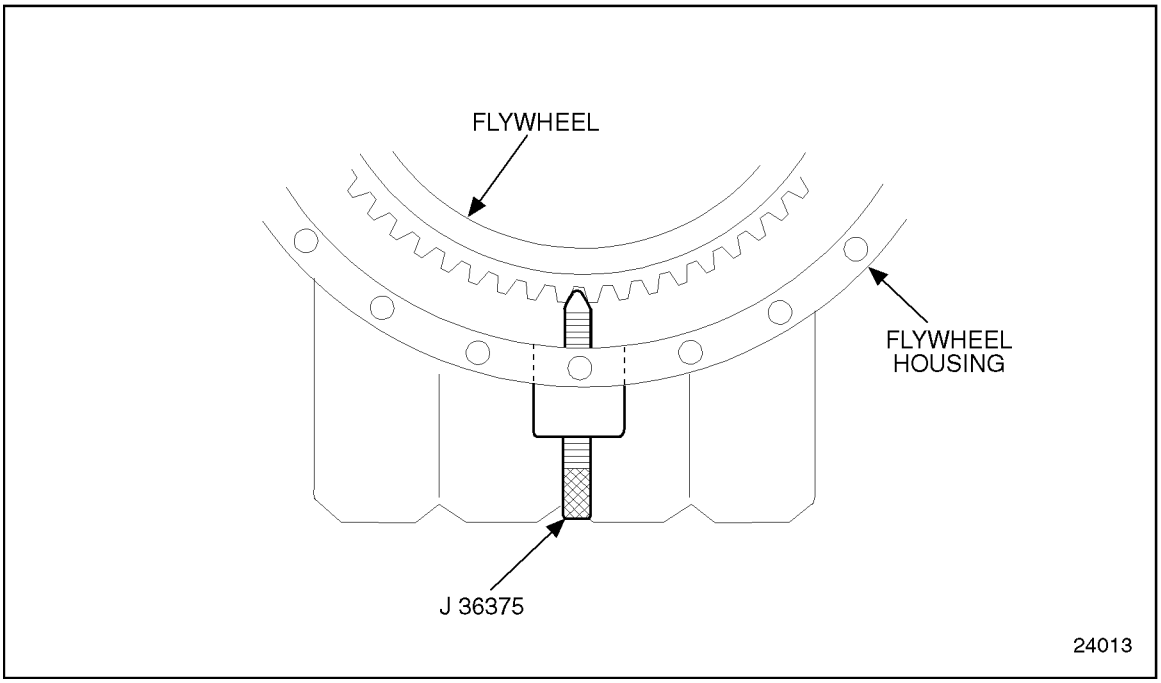

Figure 1-226 Flywheel Lock

 Copyright © 2004 DETROIT DIESEL CORPORATION

3. Thread the center screw of the tool in until the tip of the tool rests between two teeth of the flywheel ring gear.

NOTE:
It may be necessary to bar the engine over (using the square hole in the middle of the crankshaft pulley or the center bolt when the pulley and hub assembly with spindle is used) so that the tool center screw is exactly between two teeth.

4. Tighten the knurled knob finger-tight.
5. On keel-cooled marine engines, remove the charge air cooler tank. Refer to section 4.4.2.
6. Remove the isolated pulley from the spindle by removing the large center bolt (if equipped with this pulley style).
7. Remove two of the six crankshaft pulley or crankshaft pulley spindle to crankshaft special attaching bolts and hardened washers that are 180 degrees apart. Discard the bolts. These bolts are not reusable.
8. Install two guide studs, J 36235 into the holes where the bolts were removed.

NOTICE:
Use care when removing the crankshaft pulley as the vibration damper may come off. If the damper is allowed to fall, internal damage to the damper will result.

9. Remove the remaining four special crankshaft pulley bolts and hardened washers. Discard the bolts. These bolts are not reusable.

NOTICE:
Do not pound with a hammer or pry with other tools to remove the viscous damper from the crankshaft, since the outer shell may be dented and cause the flywheel to turn at the same speed as the outer shell. This renders the damper ineffective. The damper CANNOT be repaired.

10. Remove the vibration damper by sliding it off the guide studs.
11. Remove the flywheel lock and guide studs.

(Rev. 2004) *All information subject to change without notice.*
6SE483 0401 Copyright © 2004 DETROIT DIESEL CORPORATION

1.12.2.1 Inspection of the Vibration Damper

Inspect the vibration damper as follows:

NOTICE:
Dents may render the damper in effective.

1. Inspect the outer casing of the damper for damage.
   [a] Check outer casing for dents, cracks, nicks, fluid leaks or bulges.
   [b] If any dents or cracks are detected, replace with new damper.
   [c] Bulges or splits indicate that the damper fluid has deteriorated. If any are detected, replace with new damper.
2. Inspect the damper inner contact surfaces and the crankshaft end for damage. See Figure 1-227.
   [a] Check for galling or burrs.
   [b] Slight scratches or burrs may be removed with an emery cloth.
   [c] If deep scratches are detected, replace with new damper.

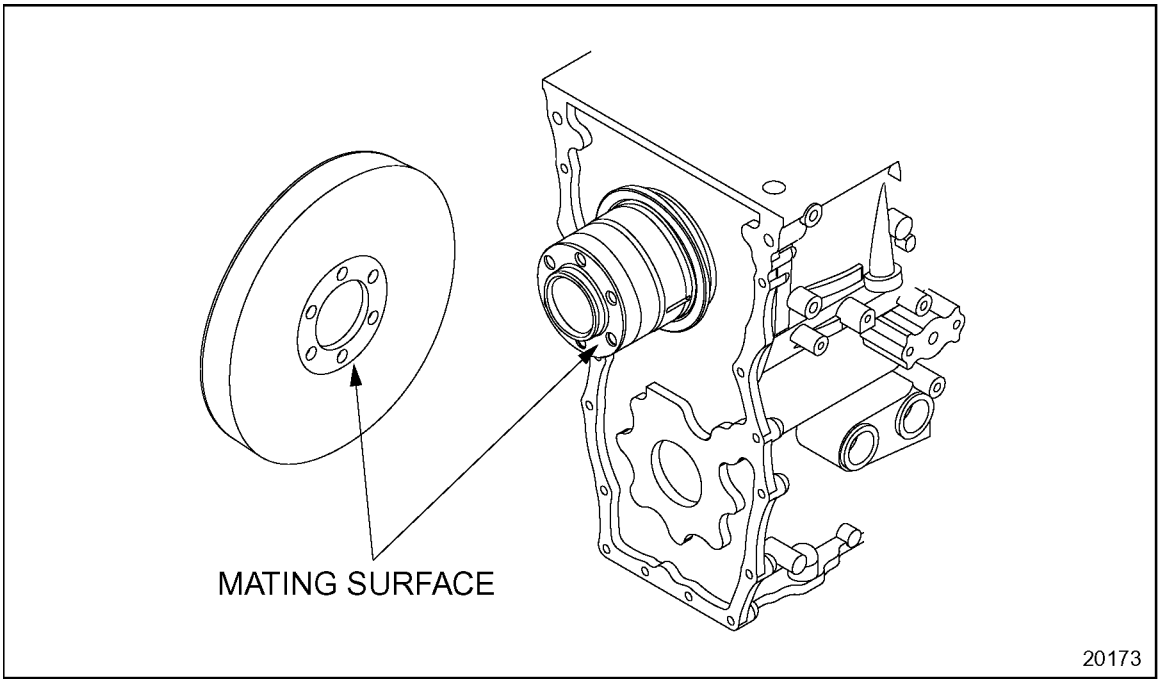

Figure 1-227 Damper and Crankshaft Contact Surfaces

 Copyright © 2004 DETROIT DIESEL CORPORATION

3. Regardless of its condition, a viscous type damper must be replaced at normal engine overhaul or whenever the engine has experienced crankshaft breakage.
4. If the vibration damper has been damaged, inspect the crankshaft. Refer to section 1.7.2.1. Crankshaft damage may have resulted.

NOTICE:
A loose engine mount could lead to damage of the vibration damper by allowing the engine to move slightly during operation.

NOTE:
It is good practice to periodically inspect the engine mounts to be sure they are not loose, cracked or deteriorated.

1.12.3 Installation of Crankshaft Vibration Damper

Install the crankshaft vibration damper as follows:

1. Install the flywheel lock, J 36375–A, to the inspection plug hole in the bottom of the flywheel housing. See Figure 1-226.

NOTE:
It may necessary to bar the engine over (using barring tool J 36237) so that the tool center screw is exactly between two teeth.

2. Thread the center screw of the tool in until the tip of the tool rests between two teeth of the flywheel ring gear. Tighten the knurled knob finger-tight.
3. Install two guide studs, J 36235, to two of the holes in the crankshaft pulley 180 degrees apart. A light coating of an antiseize compound should be applied to the pilot diameter (not the face of the crankshaft) to reduce future removal difficulty.
4. Install the vibration damper to the end of the crankshaft. The six holes in the damper are equally spaced, and the damper may be installed in any position. The part number on the face of the damper should face out, away from the engine.
5. Install the crankshaft pulley or crankshaft pulley spindle to the crankshaft. The crankshaft pulley or crankshaft pulley spindle may be installed in any position. Refer to section 1.13.3.

(Rev. 2004) *All information subject to change without notice.*
6SE483 0401 Copyright © 2004 DETROIT DIESEL CORPORATION

NOTICE:

Crankshaft pulley and spindle mounting bolts are considered single-use items and *must not be reused.* Always use new bolts when mounting the crankshaft pulley or spindle. Reusing bolts may result in excessive bolt stretch during installation, leading to loss of bolt torque and loosening during engine operation, which may cause severe engine damage.

6. Install four new special bolts, with hardened washers installed, through the pulley or crankshaft pulley spindle and damper and into the crankshaft. Finger-tighten the bolts.
7. Remove the two guide studs.
8. Install the remaining two new special bolts with hardened washers installed.
9. Torque the six crankshaft pulley bolts to 182-210 N·m (134-155 lb·ft). Proceed in a clockwise direction until all bolts are torqued.
10. Install crankshaft pulley and hub assembly (if equipped with this pulley style). Refer to section 1.13.3
11. Remove the flywheel lock tool.
12. Install the pipe plug to the inspection hole in the flywheel housing.
13. Install the drive belts to the crankshaft pulley. Adjust the belt tensions to the specifications. Refer to section 13.13.10.
14. Install any other components that were removed for this operation.
15. Refer to section 11.8 for verification of proper crankshaft vibration damper installation.

 Copyright © 2004 DETROIT DIESEL CORPORATION

1.13 CRANKSHAFT PULLEY

Two crankshaft pulley arrangements exist. Some early engines were built with a pulley, a crankshaft pulley hub and woodruff keys. Later engines are built with the crankshaft pulley bolted directly to the crankshaft.

For the crankshaft pulley bolted directly to the crankshaft, see Figure 1-228. In this case the pulley is attached to the crankshaft with six special bolts and washers. The vibration damper is clamped between the crankshaft pulley and the crankshaft.

NOTE:
Do not substitute any other bolts or washers. The crankshaft pulley bolts and washers are special parts. These bolts are not reusable.

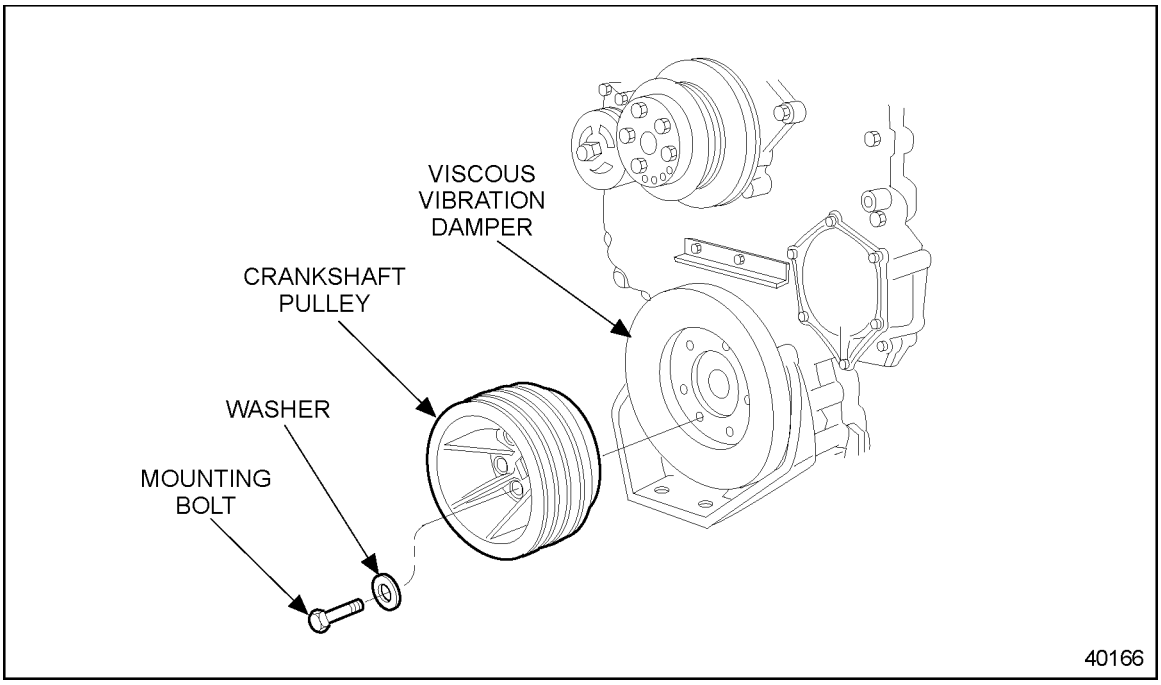

Figure 1-228 Crankshaft Pulley Mounted Directly to the Crankshaft

(Rev. 2004) *All information subject to change without notice.*
6SE483 0401 Copyright © 2004 DETROIT DIESEL CORPORATION

The crankshaft pulley is of the rigid design. Six bolt holes through the pulley are equally spaced. A relief area is machined around each bolt hole and acts as a seating surface for the hardened washers. See Figure 1-229.

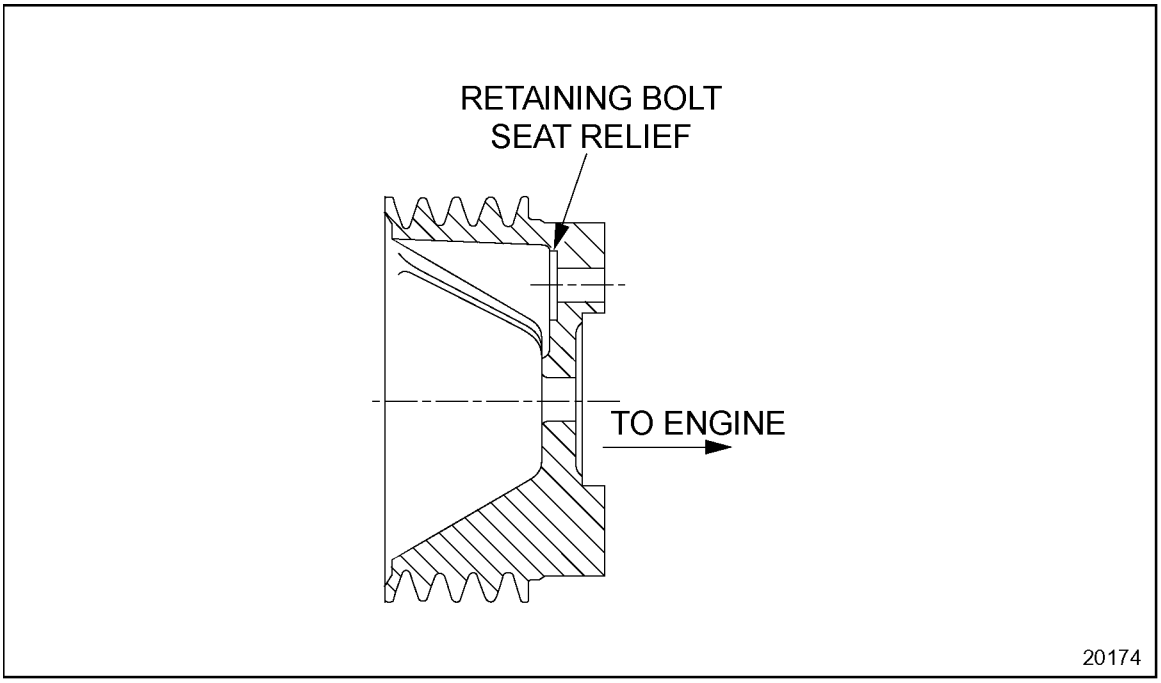

Figure 1-229 Crankshaft Pulley Cross-Section

Four 12.7 mm (.50 in.) vee-type grooves in the crankshaft pulley provide drive belt seating surfaces.

 Copyright © 2004 DETROIT DIESEL CORPORATION

A 3/4 in. square drive hole in the center of the crankshaft pulley allows the use of a 3/4 in. drive breaker bar or ratchet for barring the engine over. See Figure 1-230.

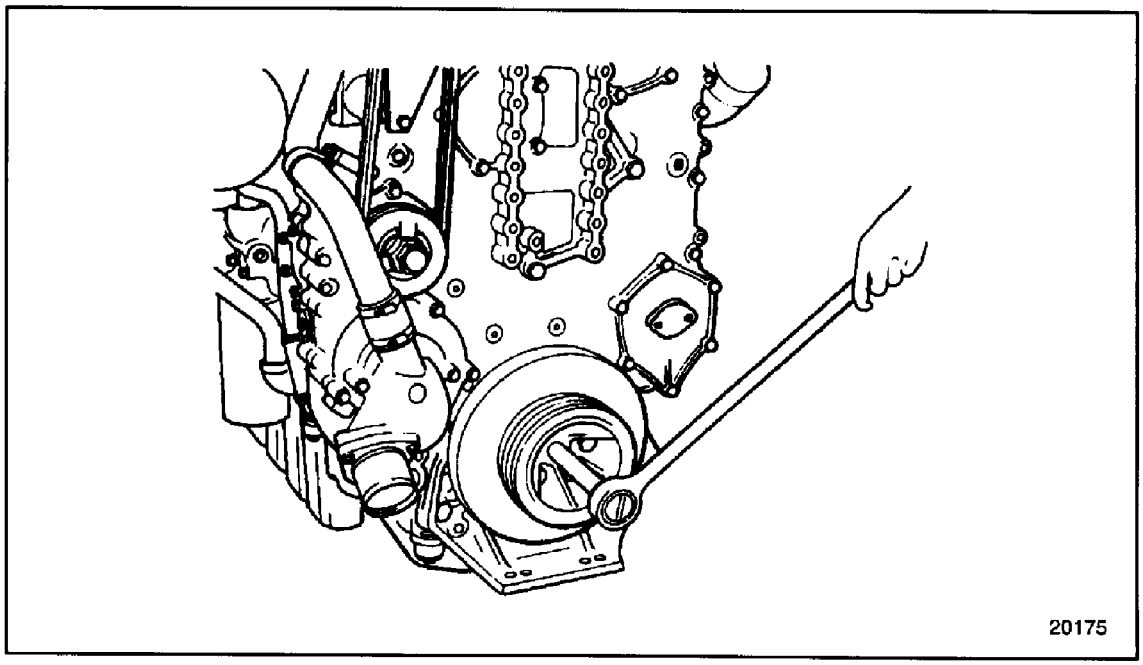

Figure 1-230 Barring Engine Over

(Rev. 2004) *All information subject to change without notice.*
6SE483 0401 Copyright © 2004 DETROIT DIESEL CORPORATION

For the crankshaft pulley and hub assembly with spindle, see Figure 1-231. The spindle is attached to the crankshaft with six special bolts and washers, which also secure the vibration damper to the crankshaft. Two woodruff keys and the crankshaft pulley bolt secure the crankshaft pulley and hub assembly to the spindle.

NOTE:
Do not substitute any other bolts or washers. The spindle bolts and washers are special parts. These bolts are not reusable.

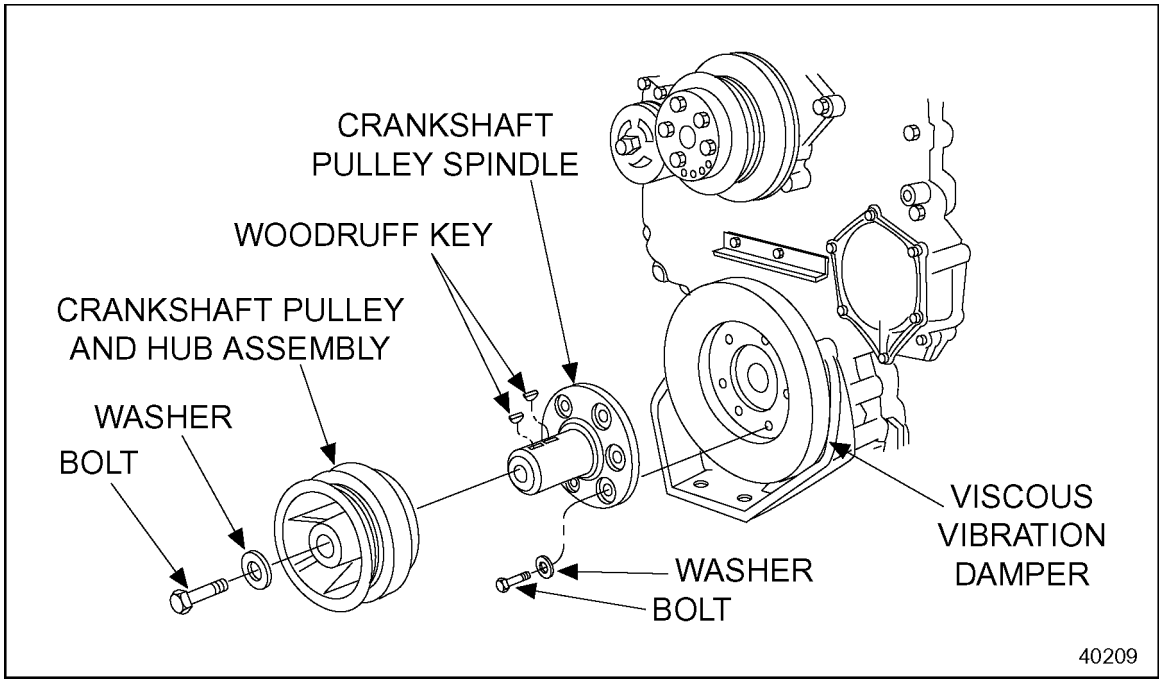

Figure 1-231 Crankshaft Pulley and Hub Assembly Installation with Spindle

 Copyright © 2004 DETROIT DIESEL CORPORATION

The spindle has six equally spaced mounting holes. A relief area is machined around each bolt hole and acts as a seating surface for the hardened washers. See Figure 1-232.

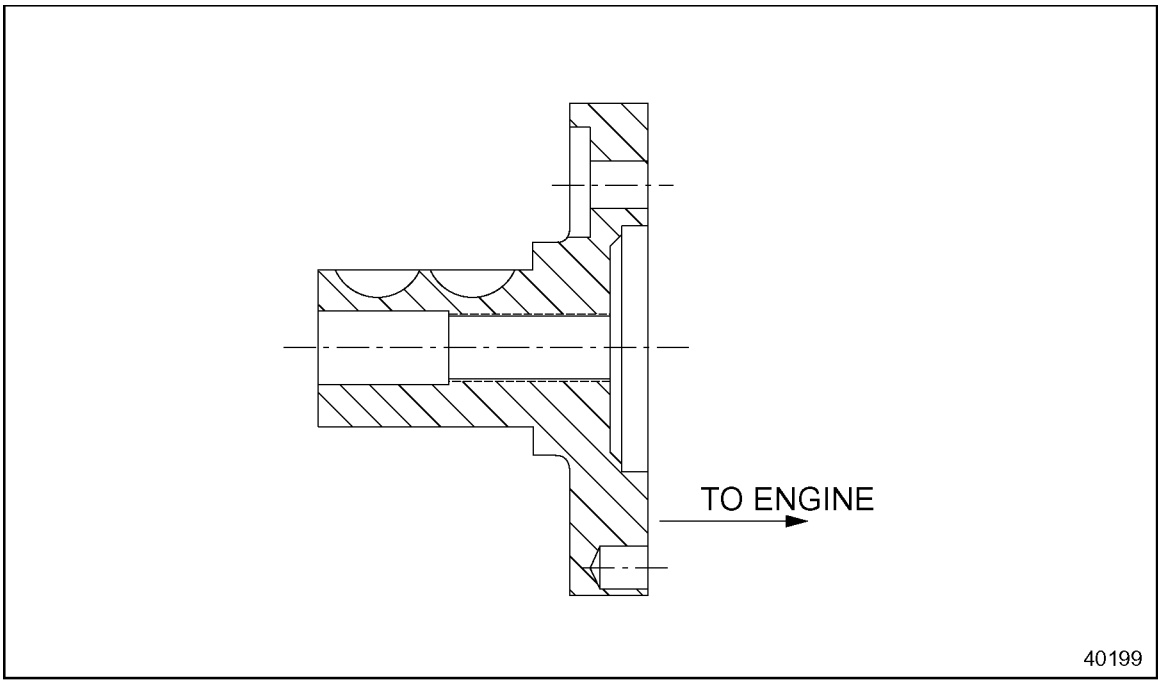

Figure 1-232 Crankshaft Pulley Spindle

The crankshaft pulley assembly is secured to the spindle with two woodruff keys, a crankshaft pulley bolt and hardened washer. The crankshaft pulley bolt is also used to bar the engine over. See Figure 1-231.

(Rev. 2004) *All information subject to change without notice.*
6SE483 0401 Copyright © 2004 DETROIT DIESEL CORPORATION

1.13.1 Repair or Replacement of Crankshaft Pulley

To determine if repair is possible or replacement is necessary, perform the following procedure. See Figure 1-233.

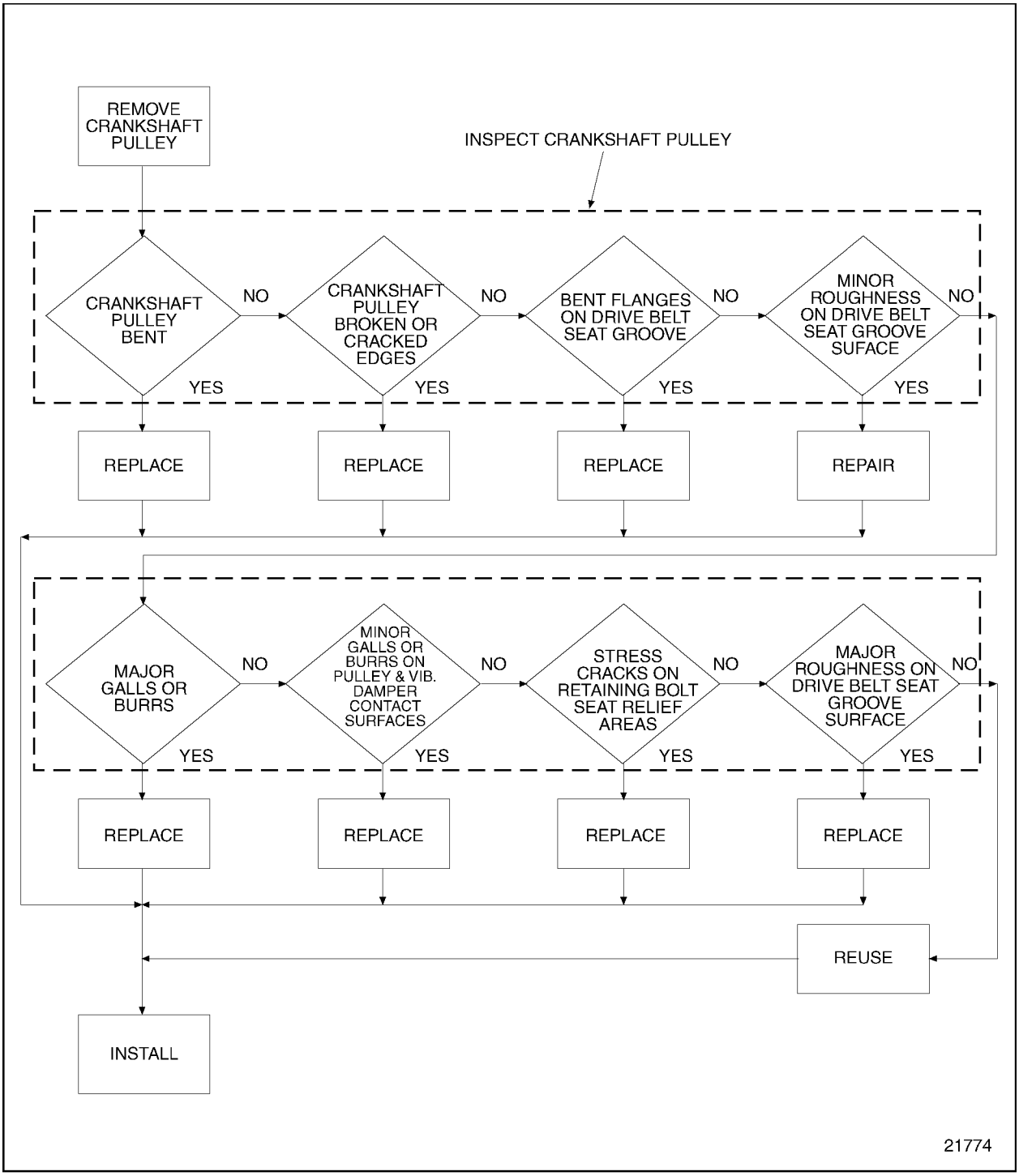

Figure 1-233 Flowchart for Repair or Replacement of Crankshaft Pulley

 Copyright © 2004 DETROIT DIESEL CORPORATION

1.13.2 Removal and Cleaning Crankshaft Pulley

Precleaning is not necessary.

Remove the crankshaft pulley as follows:

1. Remove the drive belts from the crankshaft pulley.
2. Remove the inspection plug in the bottom of the flywheel housing.
3. Install the flywheel lock, J 36375–A. See Figure 1-226.
4. Thread the center screw of the tool in until the top of the tool rests between two teeth of the flywheel ring gear.

NOTE:
It may be necessary to bar the engine over (using the square hole in the middle of the crankshaft pulley) so that the tool center screw is exactly between two teeth.

5. Finger-tighten the knurled knob.
6. Remove two of the six crankshaft pulley-to-crankshaft attaching bolts and hardened washers that are 180 degrees apart. Discard the bolts. These bolts are not reusable. See Figure 1-234.

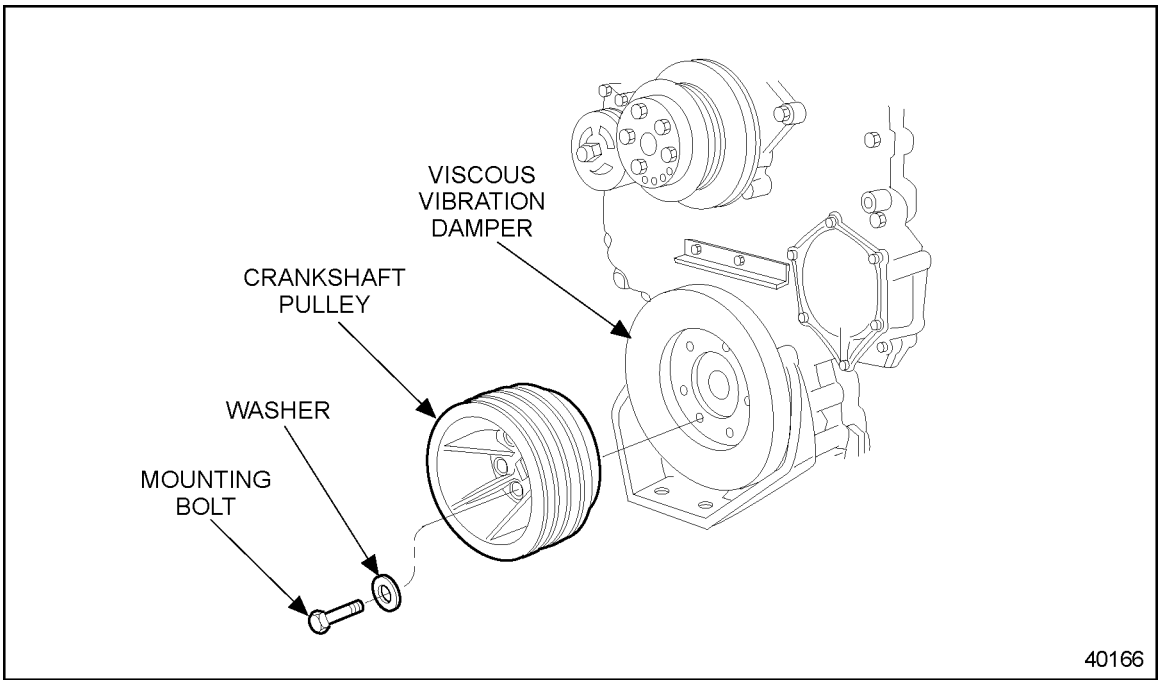

Figure 1-234 Crankshaft Pulley Mounted Directly to the Crankshaft

7. Install two guide studs, J 36235 , to the holes where the bolts were removed.

(Rev. 2004) *All information subject to change without notice.*
6SE483 0401 Copyright © 2004 DETROIT DIESEL CORPORATION

NOTICE:
Use care when removing the crankshaft pulley as the vibration damper, which is slip fitted over a pilot diameter of the crank, may come off. If the damper is allowed to fall, internal damage to the damper will result.

8. Remove the remaining four crankshaft pulley bolts and hardened washers. Discard the bolts. These bolts are not reusable.
9. Remove the crankshaft pulley by sliding it off the guide studs.

NOTE:
Leave the guide studs in place to prevent the vibration damper from falling off.

Remove the spindle-mounted pulley and hub assembly as follows:

1. Remove the drive belts from the crankshaft pulley.
2. Remove the inspection plug in the bottom of the flywheel housing.
3. Install the flywheel lock, J 36375-A. See Figure 1-235.

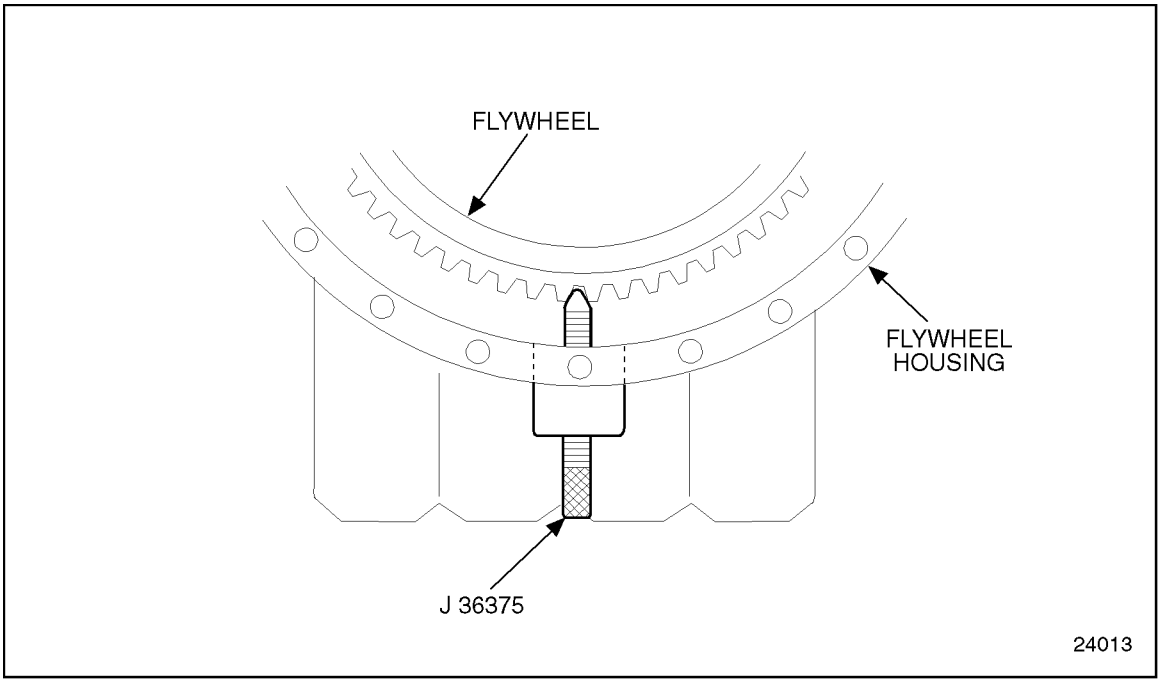

Figure 1-235 Flywheel Lock

 Copyright © 2004 DETROIT DIESEL CORPORATION

4. Thread the center screw of the tool in until the top of the tool rests between two teeth of the flywheel ring gear.

NOTE:
It may be necessary to bar the engine over using the crankshaft pulley bolt so that the tool center screw is exactly between two teeth.

5. Finger-tighten the knurled knob.
6. Loosen the center bolt holding the pulley and hub assembly to the spindle. See Figure 1-236.

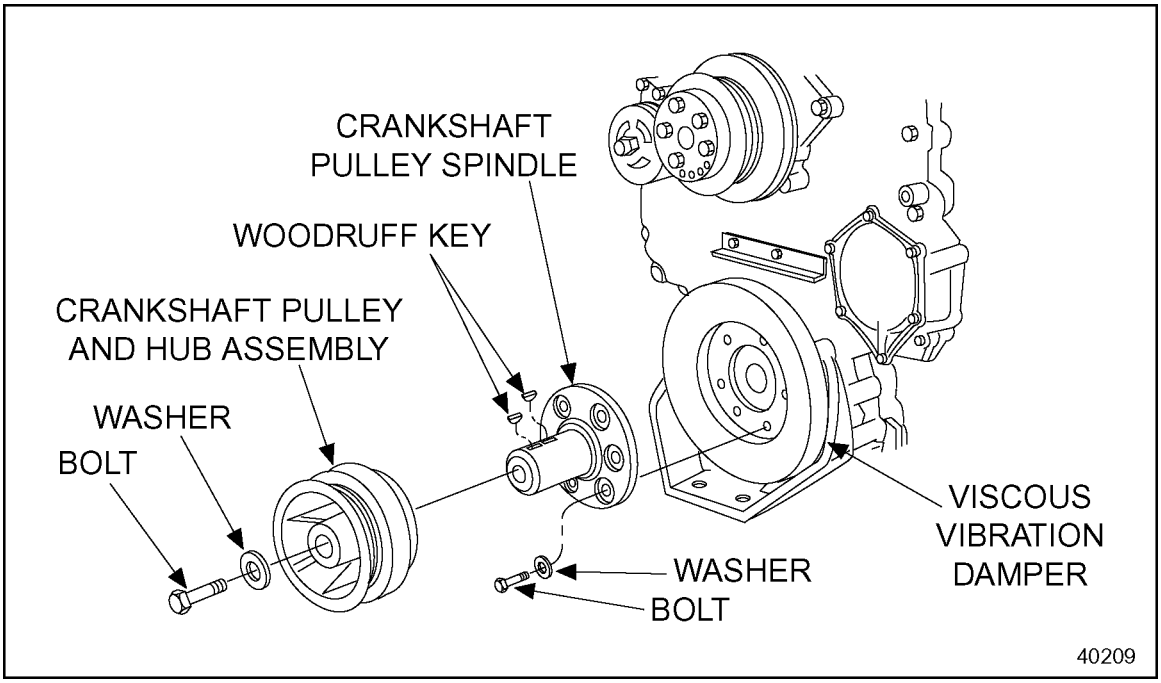

Figure 1-236 Crankshaft Pulley and Hub Assembly Installation with Spindle

7. With the pulley properly supported, remove the bolt and washer and pull the pulley and hub assembly off of the spindle.
8. Remove two of the six spindle-to-crankshaft attaching bolts and hardened washers that are 180 degrees apart. Discard the bolts. These bolts are not reusable.
9. Install two guide studs, J 36325, to the holes from which the bolts were removed.

(Rev. 2004) *All information subject to change without notice.*
6SE483 0401 Copyright © 2004 DETROIT DIESEL CORPORATION

NOTICE:
Use care when removing the spindle as the vibration damper, which is slip fitted over a pilot diameter of the crank, may come off. If the damper is allowed to fall, internal damage to the damper will result.

10. Remove the remaining four spindle attaching bolts and hardened washers. Discard all six bolts. These bolts are not reusable.
11. Remove the spindle by sliding it off the guide studs.

NOTE:
Leave the guide studs in place to prevent the vibration damper from falling off.

1.13.2.1 Inspection of Crankshaft Pulley or Spindle and Crankshaft Pulley and Hub Assembly

Inspect the crankshaft pulley, spindle or hub assembly components as follows:

1. Inspect the crankshaft pulley or spindle and crankshaft pulley and hub assembly.

NOTICE:
A loose or bent crankshaft pulley or spindle, after extended operation, may result in a cracked crankshaft.

   [a] Determine if the crankshaft pulley or spindle is bent, broken or has cracked edges.

   [b] If damage is detected, replace with a new part.

   [c] If damage to the crankshaft pulley, pulley and hub assembly or spindle is extensive, refer to section 1.12.2.1, and inspect the vibration damper. Inspect the crankshaft, refer to section 1.7.

2. Inspect the drive belt seat grooves.

   [a] Check drive belt seat grooves for bent flanges or a rough belt seating surface.

   [b] Smooth rough seating surfaces with an emery cloth or a stone.

   [c] If flanges are bent, replace the pulley.

3. Inspect the retaining bolt seat relief areas.

   [a] Check relief area for stress cracks.

   [b] If stress cracks are discovered, replace the pulley or spindle.

 Copyright © 2004 DETROIT DIESEL CORPORATION

NOTICE:
A loose or bent crankshaft pulley, after extended operation, may result in a cracked crankshaft.

4. Inspect the direct-mounted pulley (or spindle) and vibration damper inner contact surfaces. See Figure 1-237.
   [a] Check for galling or burrs. See Figure 1-237.
   [b] Minor galls or burrs may be smoothed with an emery cloth.
   [c] If galls or burrs are major, the pulley or spindle will need to be replaced.

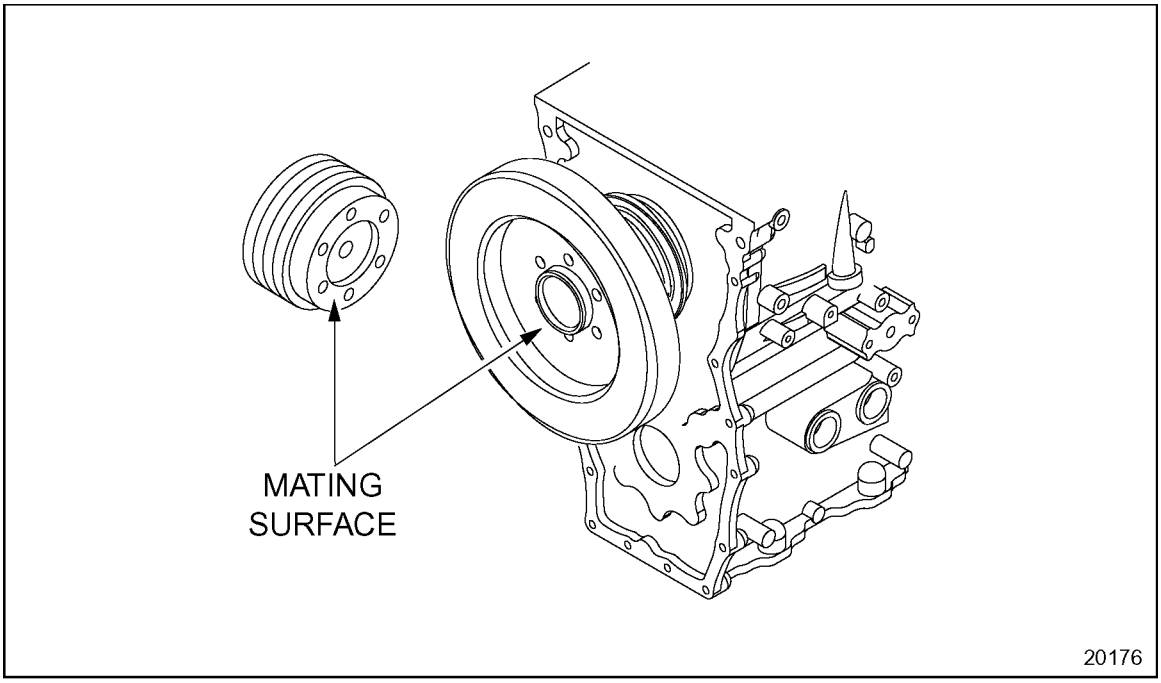

Figure 1-237 Crankshaft Pulley and Vibration Damper Inspection

(Rev. 2004) *All information subject to change without notice.*
6SE483 0401 Copyright © 2004 DETROIT DIESEL CORPORATION

1.13.3 Installation of Crankshaft Pulley

Install the crankshaft-mounted pulley as follows:

1. If removed, install the flywheel lock J 36375–Ato the inspection plug hole in the bottom of the flywheel housing. See Figure 1-235.
2. Thread the center screw of the tool until the tip of the tool rests between two teeth of the flywheel ring gear.

NOTE:
It may be necessary to bar the engine slightly using engine barring tool, J 36237, so that the tool center screw is exactly between two teeth.

3. Finger-tighten the knurled knob.

NOTICE:
Use care when installing the crankshaft pulley as the vibration damper, which is slip fitted over a pilot diameter of the crank, may come off. If the damper is allowed to fall, internal damage to the damper will result.

4. Install two guide studs to two of the holes in the crankshaft that are 180 degrees apart.
5. Install the vibration damper over the guide studs and onto the crankshaft. Refer to section 1.12.3.
6. Install the crankshaft pulley over the guide studs and onto the crankshaft. The crankshaft pulley may be installed in any position.

 Copyright © 2004 DETROIT DIESEL CORPORATION

NOTICE:

Crankshaft pulley and spindle mounting blots are considered single-use items and *must not be reused.*Always use new bolts when mounting the crankshaft pulley or spindle. Reusing bolts may result in excessive bolt stretch during installation, leading to breakage or loss of bolt torque and loosening during engine operation, which may cause severe damage.

7. Install four new special crankshaft pulley-to-crankshaft attaching bolts with hardened washers installed, through the pulley and damper and into the crankshaft. Finger tighten the bolts. See Figure 1-238.

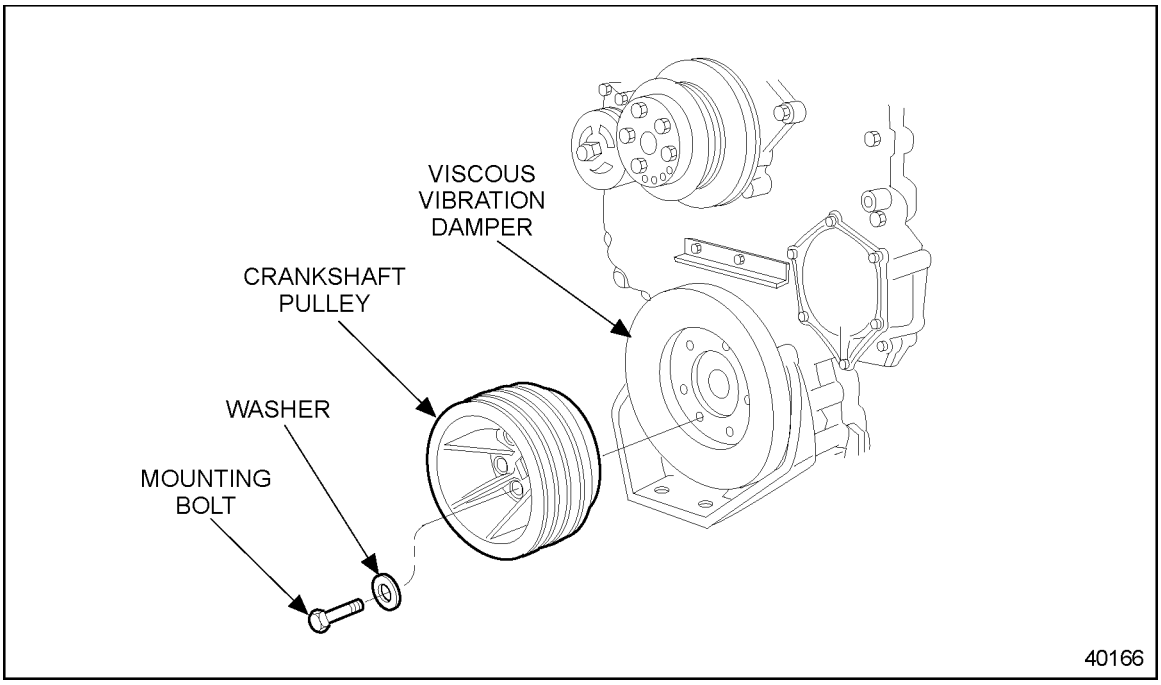

Figure 1-238 Crankshaft Pulley Mounted Directly to the Crankshaft

8. Remove the two guide studs.
9. Install the remaining two new special crankshaft pulley-to-crankshaft attaching bolts with hardened washers installed.
10. Torque the six new special bolts to 182-210 N·m (134-155 lb·ft). Proceed in a clockwise direction until all bolts are torqued.
11. Remove the flywheel lock tool.
12. Install the pipe plug to the inspection hole in the flywheel housing.
13. Install the drive belts to the crankshaft pulley. Adjust the belt tensions to the specifications. Refer to section 13.13.10.
14. Install any other components that were removed for this operation.

(Rev. 2004) *All information subject to change without notice.*
6SE483 0401 Copyright © 2004 DETROIT DIESEL CORPORATION

Install the spindle mounted pulley and hub assembly as follows:

1. Install the flywheel lock, J 36375-A. See Figure 1-239.

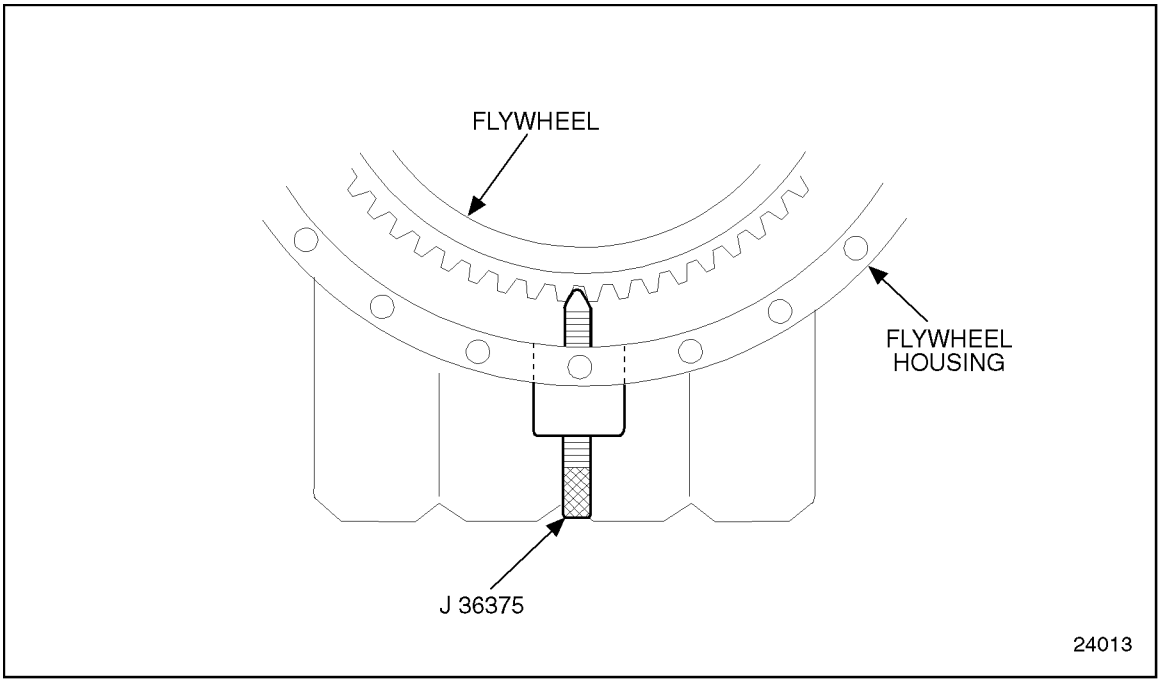

Figure 1-239 Flywheel Lock

2. Thread the center screw of the tool in until the top of the tool rests between two teeth of the flywheel ring gear.
3. Finger tighten the knurled knob.

NOTE:
It may be necessary to bar the engine over using the crankshaft pulley bolt so that the tool center screw is exactly between two teeth.

4. Install two guide studs to two of the holes in the crankshaft that are 180 degrees apart.
5. Install the vibration damper over the guide studs and onto the crankshaft. Refer to section 1.12.3.

 Copyright © 2004 DETROIT DIESEL CORPORATION

NOTICE:
Use care when installing the crankshaft pulley spindle as the vibration damper, which is slip fitted over a pilot diameter of the crank, may come off. If the damper is allowed to fall, internal damage to the damper will result.

6. Install the crankshaft pulley spindle over the guide studs, onto the crankshaft and against the vibration damper. The crankshaft pulley spindle may be installed in any position. See Figure 1-240.

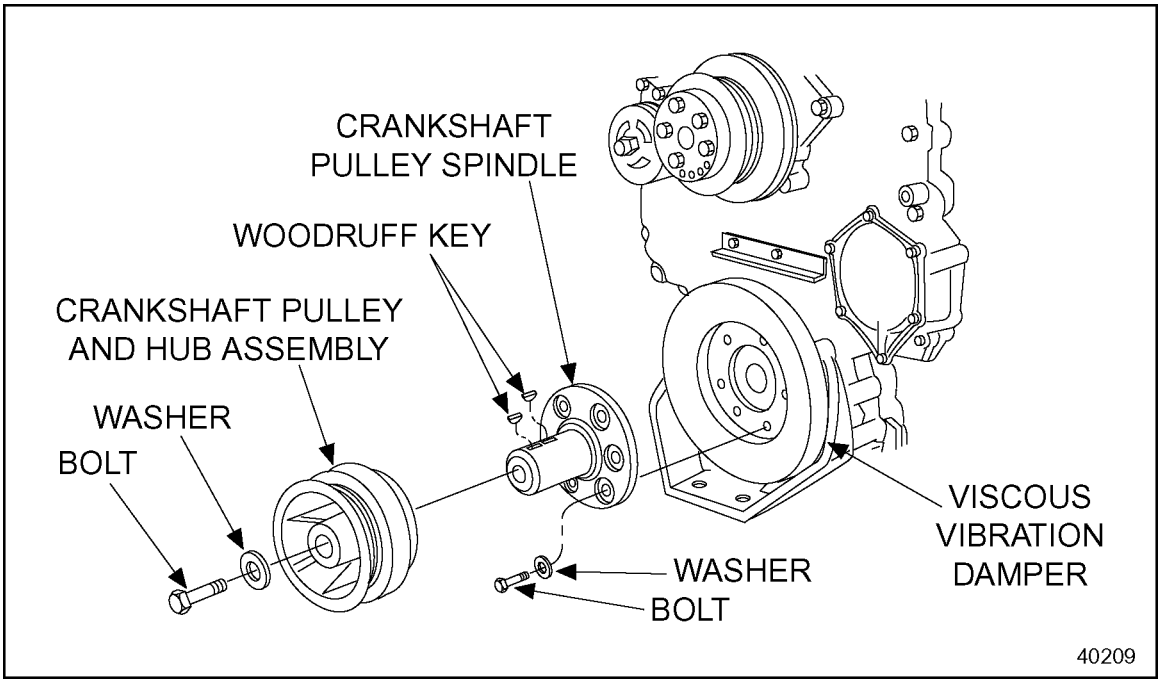

Figure 1-240 Crankshaft Pulley and Hub Assembly Installation with Spindle

7. Install four new special crankshaft pulley spindle-to-crankshaft attaching bolts with hardened washers installed.
8. Remove the two guide studs.
9. Install the remaining two new special crankshaft pulley spindle-to-crankshaft attaching bolts with hardened washers installed.
10. Torque the six new special bolts to 182-210 N·m (134-155 lb·ft). Proceed in a clockwise direction until all bolts are torqued.
11. With the pulley properly supported, install the bolt and washer and pull the pulley to the spindle.
12. Torque the center bolt holding the pulley to the spindle to 610 N·m (450 lb·ft).
13. Remove the flywheel lock tool.

(Rev. 2004) *All information subject to change without notice.*
6SE483 0401 Copyright © 2004 DETROIT DIESEL CORPORATION

14. Install the pipe plug to the inspection hole in the flywheel housing.
15. Install the drive belts to the crankshaft pulley. Adjust the belt tensions to the specifications. Refer to section13.13.10.
16. Install any other components that were removed for this operation.
17. Refer to section 11.3 for verification of proper crankshaft pulley installation.

 Copyright © 2004 DETROIT DIESEL CORPORATION

1.14 FLYWHEEL

The flywheel is attached to the rear end of the crankshaft with twelve bolts. The bolt holes in the crankshaft and flywheel are equally spaced. The flywheel is not indexed to the crankshaft, and may be installed in any position. A scuff plate is used between the flywheel and the bolt heads to prevent the bolt heads from scoring the flywheel surface. See Figure 1-241 for a typical Series 60G flywheel assembly or see Figure 1-242 for a typical diesel flywheel assembly.

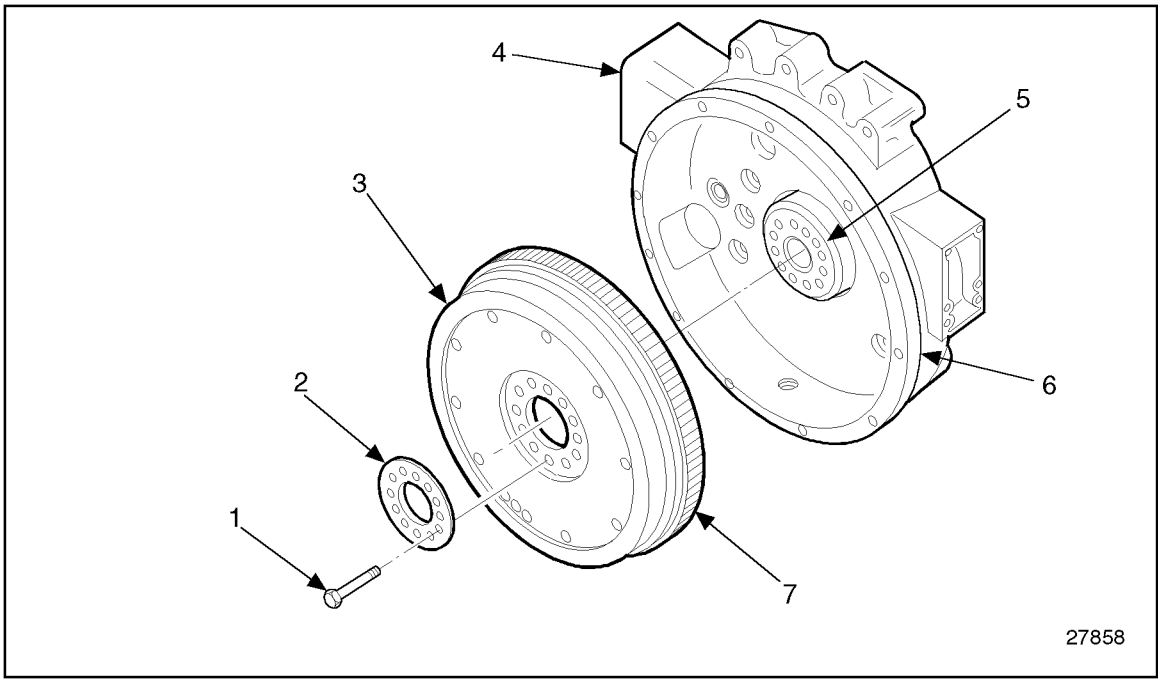

1. Bolt
2. Scuff Plate
3. Flywheel
4. Flywheel Housing
5. Crankshaft
6. Flywheel Housing Spacer
7. Ring Gear

Figure 1-241 Typical Flywheel Assembly (Series 60G Engine)

(Rev. 2004) *All information subject to change without notice.*
6SE483 0401 Copyright © 2004 DETROIT DIESEL CORPORATION

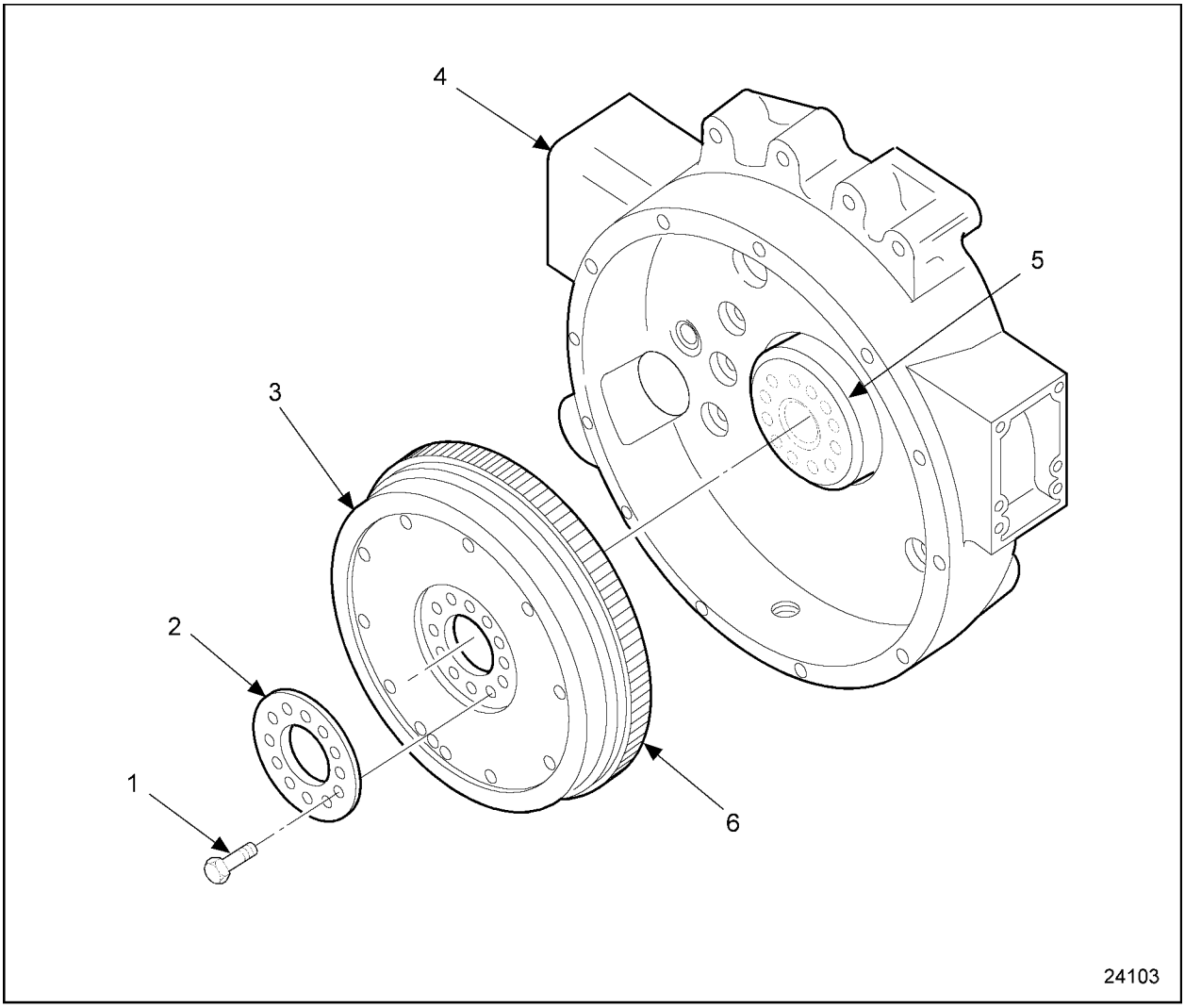

1. Bolt (12)
2. Scuff Plate
3. Flywheel
4. Flywheel Housing
5. Crankshaft
6. Ring Gear

Figure 1-242 Typical Flywheel Assembly (Diesel)

A steel ring gear, which meshes with the starting motor pinion, is shrunk onto the rim of the flywheel.

The flywheel is machined to provide true alignment with the clutch. The clutch plate, if used, is bolted to the flywheel with 3/8 in.-16 bolts.

The flywheel must be removed for service operations such as replacing the starter ring gear, crankshaft oil seal, crankshaft or the flywheel housing.

 Copyright © 2004 DETROIT DIESEL CORPORATION

1.14.1 Repair or Replacement of Flywheel

To determine if repair is possible or replacement is necessary, perform the following procedure. See Figure 1-243.

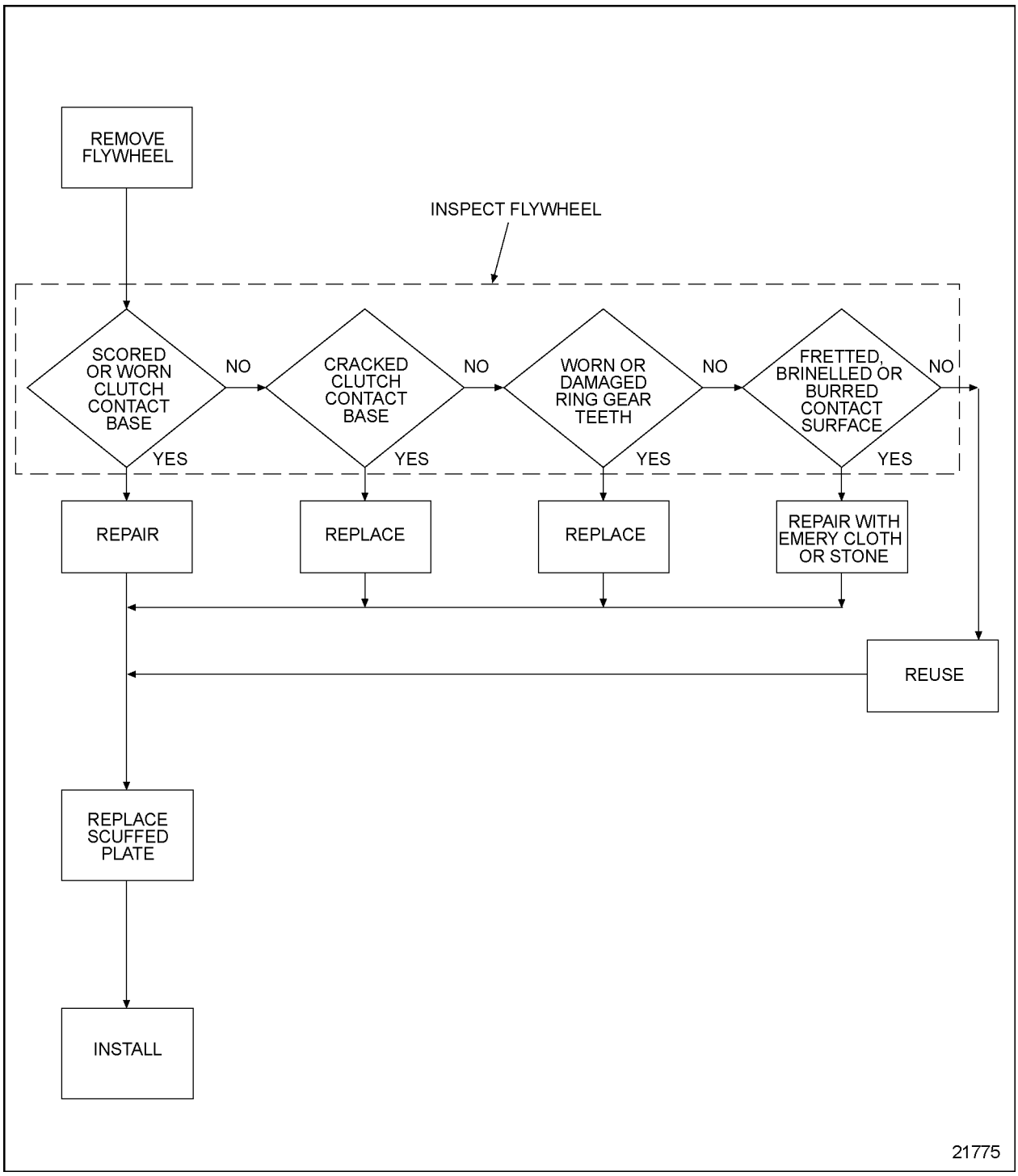

Figure 1-243 Flowchart for Repair or Replacement of Flywheel

(Rev. 2004) *All information subject to change without notice.*
6SE483 0401 Copyright © 2004 DETROIT DIESEL CORPORATION

1.14.2 Removal and Cleaning of Flywheel

Precleaning is not necessary.

Remove the flywheel as follows:

1. Remove the inspection plug in the bottom of the flywheel housing.
2. Install the flywheel lock, J 36375–A. See Figure 1-226.
3. Thread the center screw of the tool in until the tip of the tool rests between two teeth of the flywheel ring gear.

NOTE:
It may be necessary to bar the engine over (using the square hole in the middle of the crankshaft pulley) so that the tool center screw is exactly between two teeth.

4. Finger-tighten the knurled knob.
5. Remove eleven of the twelve flywheel attaching bolts, leaving one bolt at the 12 o'clock position.
6. Install two flywheel guide studs, J 36235, through the flywheel and into the crankshaft at the 3 and 9 o'clock positions. See Figure 1-244.

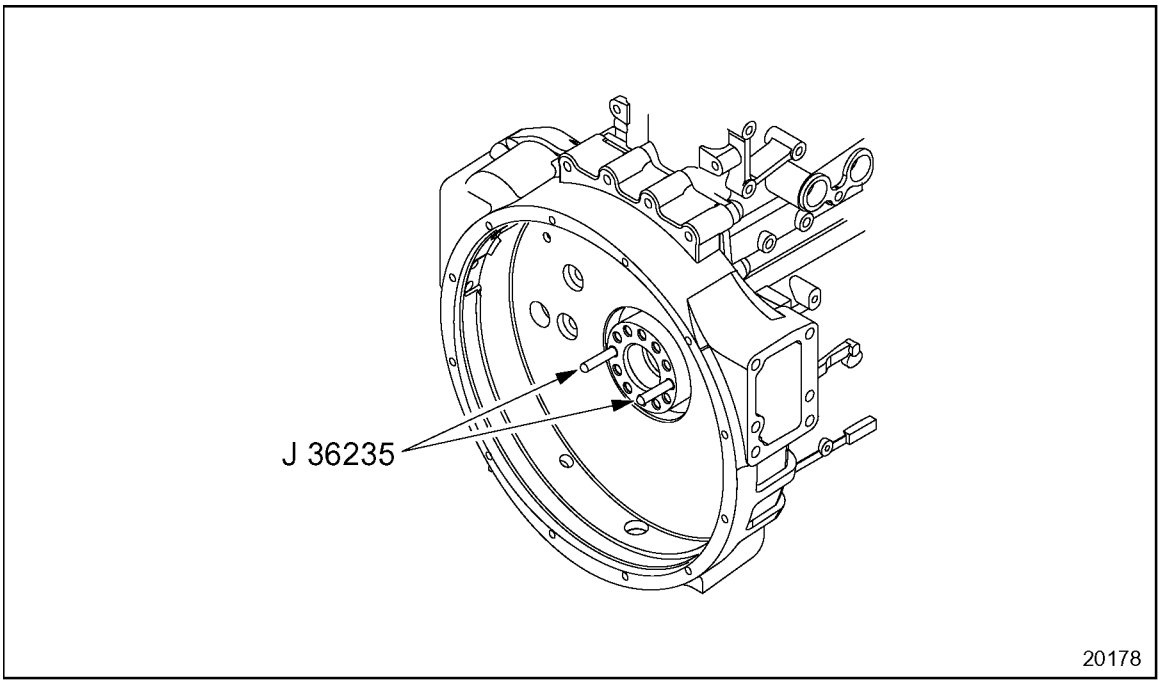

Figure 1-244 Flywheel Guide Studs

 Copyright © 2004 DETROIT DIESEL CORPORATION

7. Attach the flywheel lifting tool, J 25026, or some other suitable lifting device, to the flywheel. See Figure 1-245.

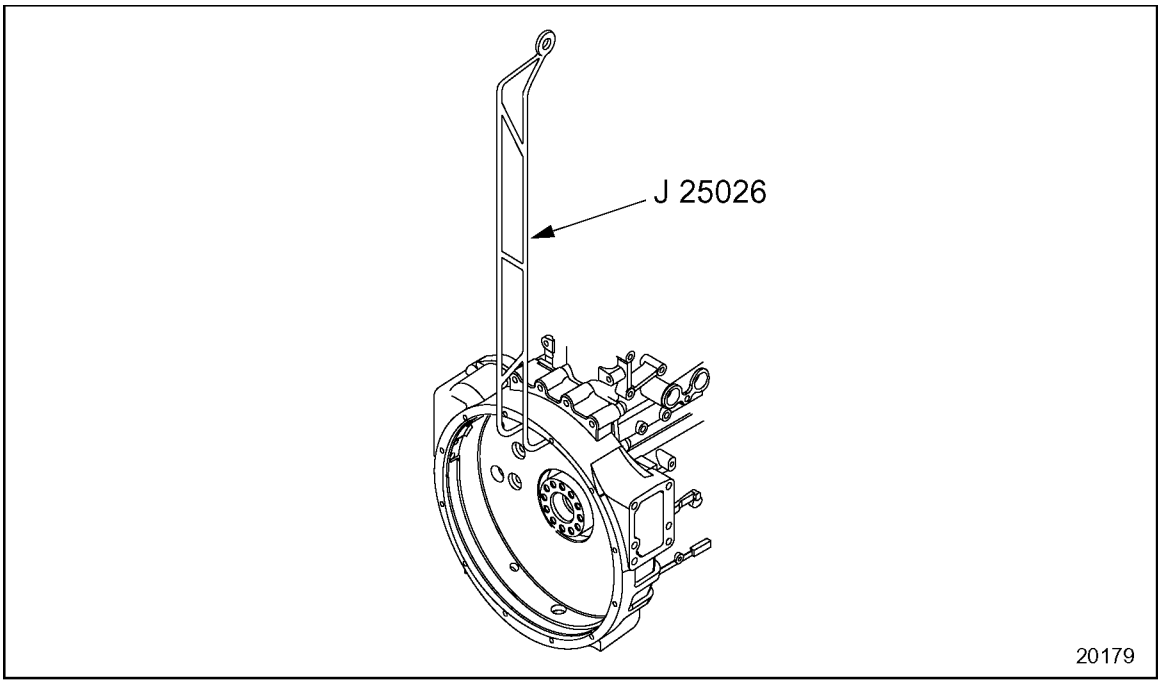

Figure 1-245 Flywheel Removal

8. Attach a chain hoist to the lifting tool.
9. Loosen, but do not remove the last flywheel attaching bolt.
10. Remove the flywheel lock.

CAUTION:

To avoid injury from a falling flywheel when removing the last bolt, hold the flywheel against the crankshaft by hand to prevent it from slipping off the crankshaft. The flywheel is not doweled to the crankshaft.

11. Remove the last flywheel attaching bolt and scuff plate. (Discard scuff plate.)
12. Remove flywheel.

(Rev. 2004) *All information subject to change without notice.*
6SE483 0401 Copyright © 2004 DETROIT DIESEL CORPORATION

1.14.2.1 Inspection of Flywheel

Inspect the flywheel as follows:

1. Inspect the clutch contact base of the flywheel.
   [a] Check clutch contact base for scoring, wear, or cracks.
   [b] The flywheel may be refaced, if the clutch contact face is scored or worn.

NOTE:
Do not remove more than 0.508 mm (0.020 in.) material from the flywheel. Maintain all of the radii when resurfacing.

   [c] The flywheel must be replaced, if the clutch contact face shows cracks.
2. Inspect the ring gear.
   [a] Check ring gear for excessively worn or damaged gear teeth.
   [b] If damaged gear teeth are detected, replace the ring gear. Refer to section 1.15.2.
3. Inspect crankshaft and flywheel contact surface.
   [a] Check the butt end of the crankshaft and flywheel contact surface for fretting, brinelling, or burrs. See Figure 1-246.
   [b] Lightly stone the contact surface to remove any fretting, brinelling, or burrs.

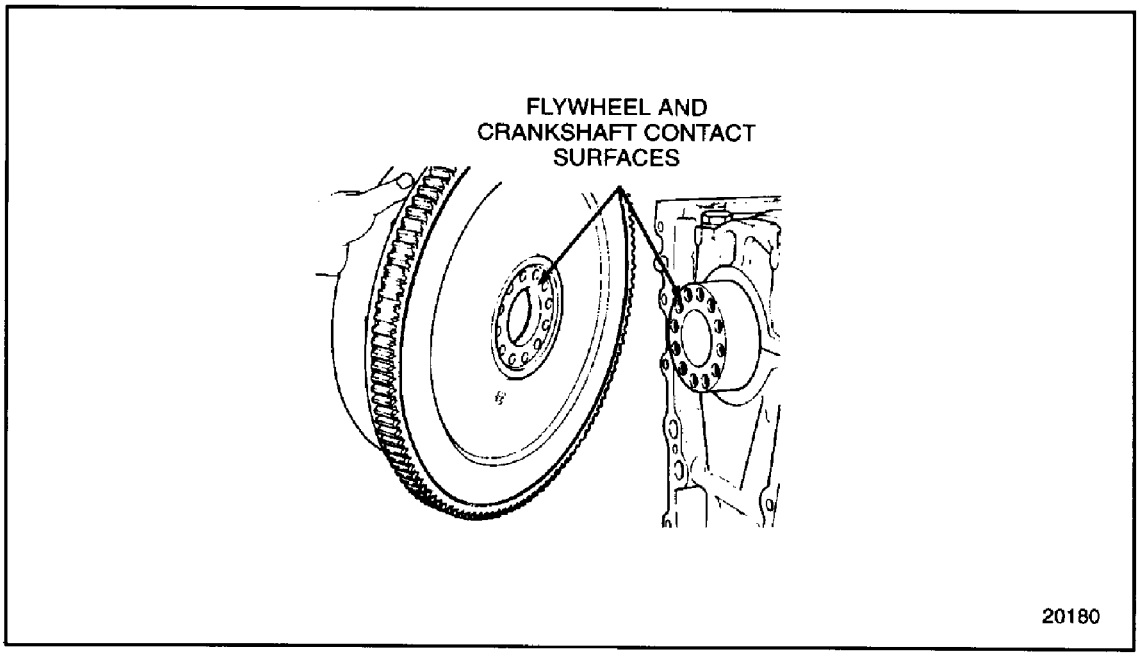

Figure 1-246 Crankshaft and Flywheel Mating Surfaces

 Copyright © 2004 DETROIT DIESEL CORPORATION

1.14.3 Installation of Flywheel

Install the flywheel as follows:

1. Install two flywheel guide studs, J 36235, into two of the tapped holes in the crankshaft at the 3 and 9 o'clock position.
2. Attach the flywheel lifting tool and, using a chain hoist, position the flywheel in the flywheel housing. Align the flywheel bolt holes with the crankshaft bolt holes.

NOTICE:
A new scuff plate must be used whenever the flywheel is removed. Failure to replace the scuff plate may cause the flywheel bolts to loosen, even when torqued correctly.

3. Using a new scuff, install two bolts with International Compound #2® (or equivalent) through the plate 180 degrees from each other.
4. Install the flywheel lock, J 36375–A. See Figure 1-226.
5. Remove the flywheel lifting tool and guide studs.

(Rev. 2004) *All information subject to change without notice.*
6SE483 0401 Copyright © 2004 DETROIT DIESEL CORPORATION

6. Apply International Compound #2® (or equivalent) to the threads and to the bolt head contact area (underside) of the remaining bolts. The bolt threads must be completely filled with International Compound #2® (or equivalent). Any excess must be wiped off. See Figure 1-247.

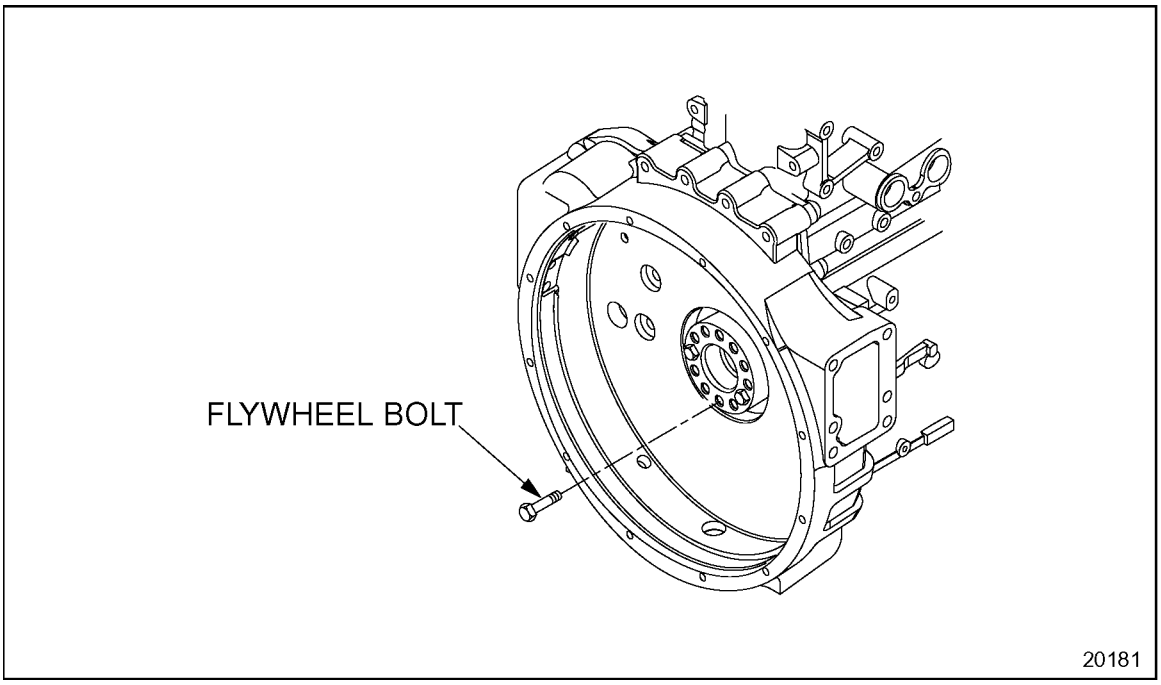

Figure 1-247 Flywheel Bolt Preparation

NOTE:
International Compound #2® or equivalent must never be used between two surfaces where maximum friction is desired, as between the crankshaft and the flywheel.

 Copyright © 2004 DETROIT DIESEL CORPORATION

7. Install the bolts and torque them to 75 N·m (55 lb·ft).
8. Turn the bolts an additional 120 degrees, or 2 flats on a six-point bolt. See Figure 1-248.

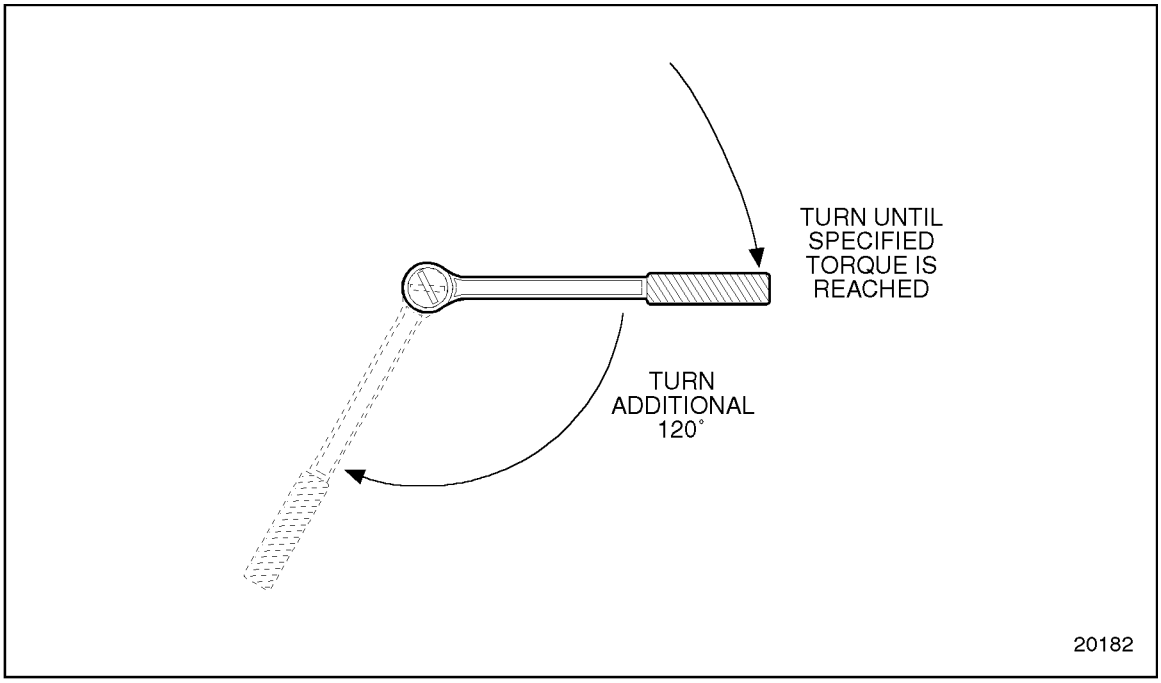

Figure 1-248 Torque Turn Limits

(Rev. 2004) *All information subject to change without notice.*
6SE483 0401 Copyright © 2004 DETROIT DIESEL CORPORATION

9. Remove the flywheel lock tool, J 36375–A.
10. Install the pipe plug and torque to 45-56 N·m (33-41 lb·ft).
11. Mount a dial indicator with a magnetic base on the flywheel housing. See Figure 1-249.

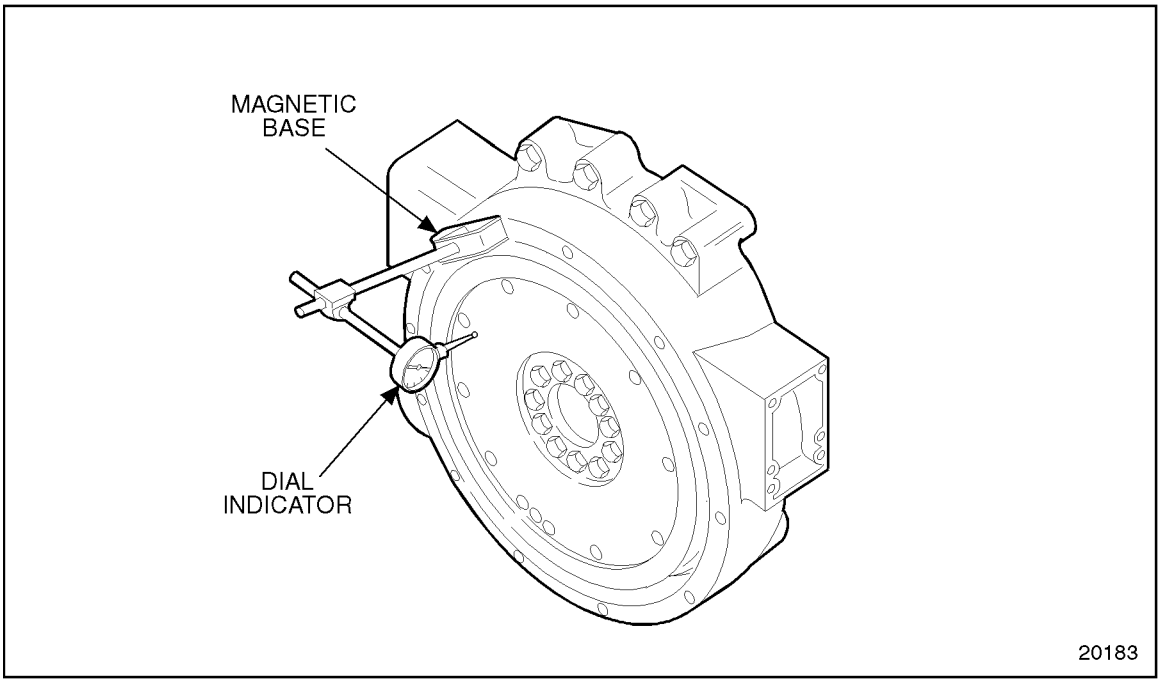

Figure 1-249 Measuring Flywheel Run-out

12. Check the run-out of the flywheel at the clutch contact face.
13. The maximum allowable run-out is 0.001 mm per millimeter of radius (0.001 in. per inch of radius) total indicator reading per inch of radius (or 0.001 mm per millimeter of radius). The radius is measured from the center of the flywheel to the outer edge of the clutch contact face of the flywheel. Example: A 14 in. clutch would allow 0.177 mm (0.007 in.) total indicator reading.
14. If maximum total indicator reading exceeds, 0.001 mm per millimeter of radius (0.001 in. per inch of radius), it may be necessary to repeat the assembly procedure until the cause can be detected and eliminated.

 Copyright © 2004 DETROIT DIESEL CORPORATION

1.15 RING GEAR

The steel ring gear, which meshes with the starting motor pinion, is shrunk onto the rim of the flywheel.

1.15.1 Repair or Replacement of Ring Gear

Inspection of the flywheel indicated that ring gear replacement is necessary. See Figure 1-250.

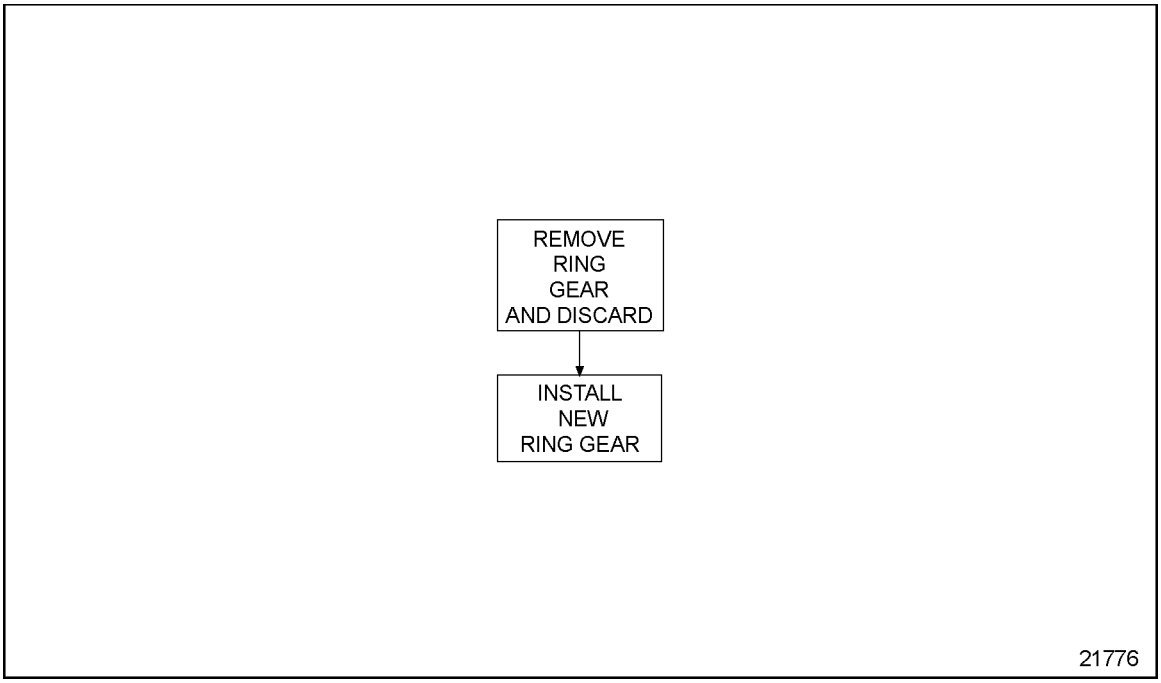

Figure 1-250 Flowchart for Repair or Replacement of Ring Gear

1.15.2 Removal and Cleaning of Ring Gear

Precleaning is not necessary.

Remove the ring gear as follows:

1. Using an acetylene torch, cut the ring gear 1/2 to 3/4 of the way through, without allowing the flame to touch the flywheel.
2. The uncut portion will now yield. Tap the ring gear to remove it from the flywheel.

(Rev. 2004) *All information subject to change without notice.*
6SE483 0401 Copyright © 2004 DETROIT DIESEL CORPORATION

1.15.3 Installation of Ring Gear

Install the ring gear as follows:

1. Support the flywheel, ring gear side up, on a solid flat surface.

CAUTION:

To avoid injury from burning, use lifting tools and heat-resistant gloves when handling heated components.

NOTICE:

Do not under any circumstances, heat the gear over 204°C (399°F). Excessive heat may destroy the original heat treatment. Heat indicating "crayons" which are placed on the ring gear and melt at a predetermined temperature, may be obtained from most tool vendors. Use of these "crayons" will ensure against overheating the gear.

2. Rest the ring gear on a flat METAL SURFACE, and heat the gear uniformly with an acetylene torch, keeping the torch moving around the gear to avoid hot spots.
3. Use a pair of tongs to place the gear on the flywheel with the chamfer, if any, facing the same direction as on the gear just removed.
4. Tap the gear in place against the shoulder on the flywheel. If the gear cannot be tapped into place readily so that it is seated all the way around, remove it, and apply additional heat.

 Copyright © 2004 DETROIT DIESEL CORPORATION

1.16 FLYWHEEL HOUSING

The flywheel housing is a one-piece casting mounted against the rear of the cylinder block. It provides a cover for the flywheel and serves as a support for the cranking motor and the transmission. See Figure 1-251.

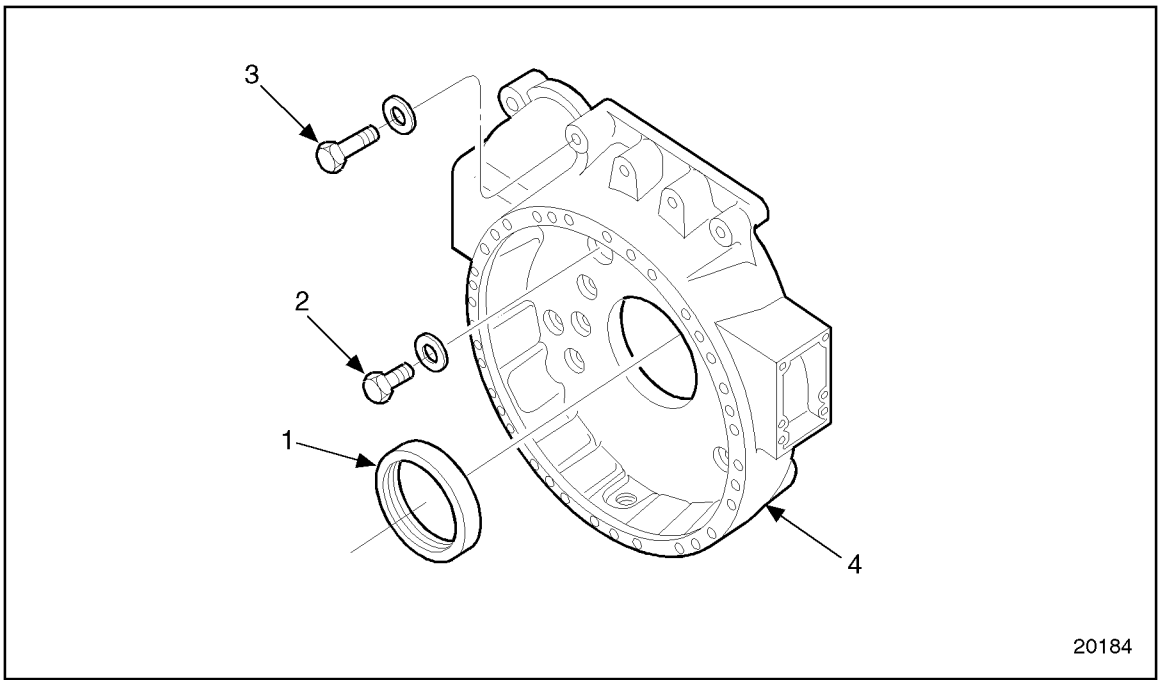

1. Crankshaft Rear Oil Seal
2. Inner Bolt (8 short)
3. Outer Bolt (4 long)
4. Flywheel Housing

Figure 1-251 Flywheel Housing and Related Parts

The crankshaft rear oil seal, which is pressed into the housing, may be removed or installed without removing the housing. Refer to section 1.8.2.

(Rev. 2004) *All information subject to change without notice.*
6SE483 0401 Copyright © 2004 DETROIT DIESEL CORPORATION

1.16.1 Repair or Replacement of Flywheel Housing

To determine if repair is possible or replacement is necessary, perform the following procedure. See Figure 1-252.

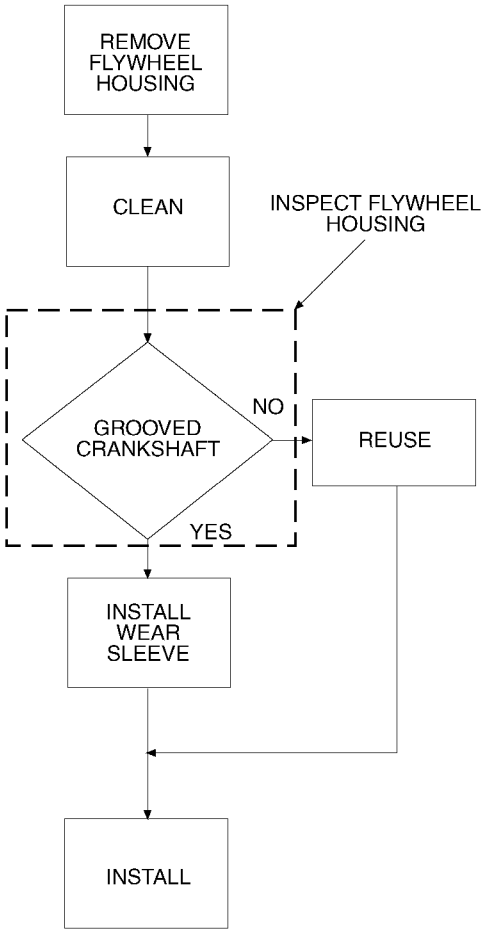

Figure 1-252 Flowchart for Repair or Replacement of Flywheel Housing

 Copyright © 2004 DETROIT DIESEL CORPORATION

1.16.2 Removal and Cleaning of Flywheel Housing

Precleaning is not necessary.

Remove the flywheel housing as follows:

1. If the engine is removed from the vehicle, mount the engine on an overhaul stand. Refer to section 1.1.2.
2. Drain the engine oil; refer to section 13.13.1, and remove the oil pan; refer to section 3.11.2.
3. Remove the flywheel and scuff plate. Refer to section 1.14.2.
4. Remove the four long outer bolts and the eight short inner bolts that secure the flywheel housing to the engine. See Figure 1-251.
5. To guide the flywheel housing until it clears the end of the crankshaft, thread two guide studs, J 35785 for 12 mm bolts, or J 43431 for 14 mm bolts, into the cylinder block. See Figure 1-253.

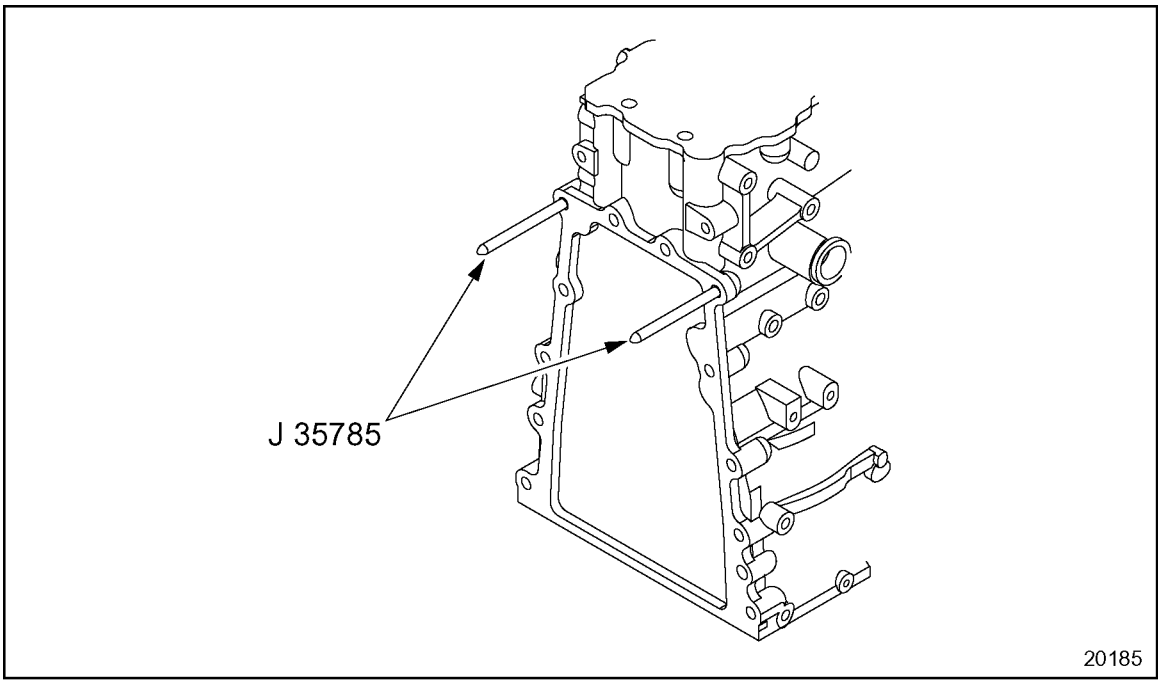

Figure 1-253 Pilot Stud Installation

NOTE:
The illustration is shown with the flywheel housing already removed for clarity.

(Rev. 2004) *All information subject to change without notice.*
6SE483 0401 Copyright © 2004 DETROIT DIESEL CORPORATION

6. Thread eye bolts into the tapped holes in the side pads of the flywheel housing.
7. Attach a suitable sling to the eye bolts and strike the front face of the housing alternately on each side with a soft hammer to loosen and work it off the dowel pins.
8. Remove and discard the crankshaft rear oil seal.
9. Remove all sealing material from the flywheel housing. Refer to section, "Cleaning" in the "General Information" section at the beginning of this manual.

1.16.2.1 Inspection of Flywheel Housing and Rear Oil Seal Area of Crankshaft

Inspect the flywheel housing as follows:

1. Inspect flywheel housing for cracks and any other damage.
   [a] If sealing surface is damaged, repair with emery cloth.
   [b] If cracked, repair is not possible.
2. Inspect the crankshaft where the rear oil seal makes contact.
   [a] Check for groove in crankshaft.
   [b] If crankshaft is grooved, install a wear sleeve over the crankshaft end. An oversized I.D. rear oil seal must be used with the rear sleeve. Refer to section 1.8.7.

 Copyright © 2004 DETROIT DIESEL CORPORATION

1.16.3 Installation of Flywheel Housing

Install the flywheel housing as follows:

1. Apply a continuous 1.6 mm (1/16 in.) bead of Loctite® 509 Gasket Eliminator®, or equivalent, to the cylinder block where it mates with the flywheel housing. See Figure 1-254.

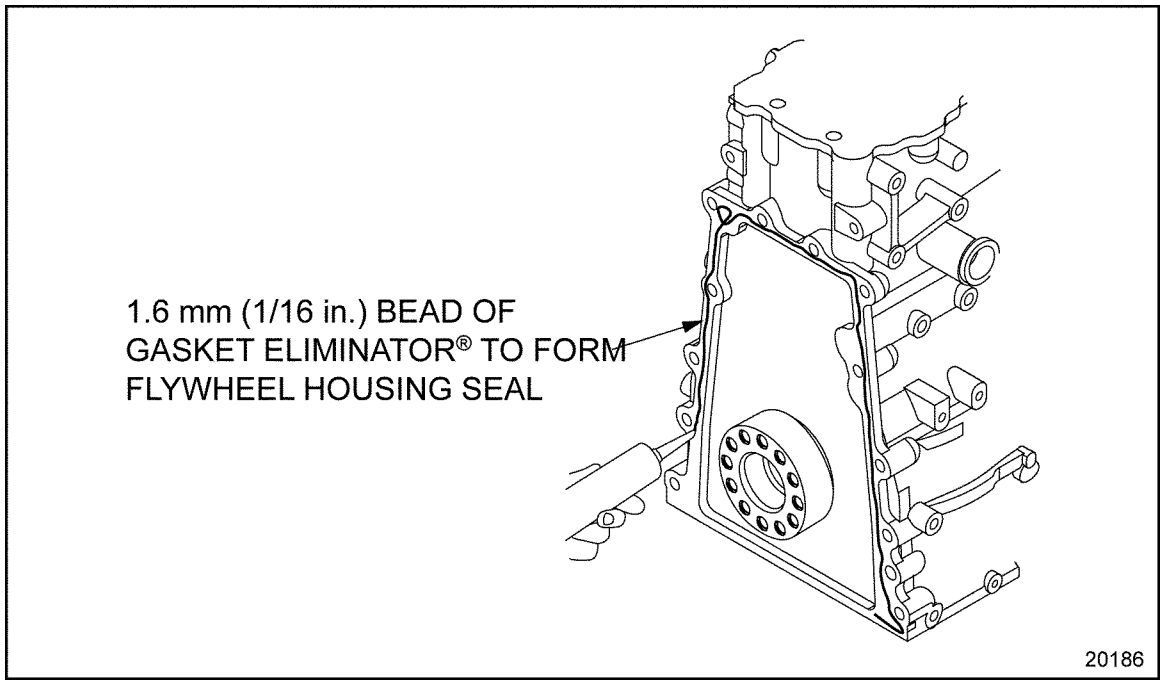

Figure 1-254 Gasket Eliminator® Installation

2. Thread two aligning studs, J 35785 for 12 mm bolts or J 43431 for 14 mm bolts, into the cylinder block to guide the housing in place. See Figure 1-253.
3. Support the housing and position it over the crankshaft and against the cylinder block.

NOTE:
Whenever crankshaft rear seal is put over the crankshaft, use crankshaft oil seal expander. Refer to section 1.8.7.

(Rev. 2004) *All information subject to change without notice.*
6SE483 0401 Copyright © 2004 DETROIT DIESEL CORPORATION

4. Install all of the housing bolts in their proper location, finger-tighten them.
5. Remove the pilot studs.
6. Torque the eight short and four long flywheel housing bolts using the proper tightening sequence. See Figure 1-255.
   [a] If the bolts are 12 mm, torque to 112-126 N·m (83-93 lb·ft).
   [b] If the bolts are 14 mm, torque to 160-200 N·m (118–148 lb·ft).

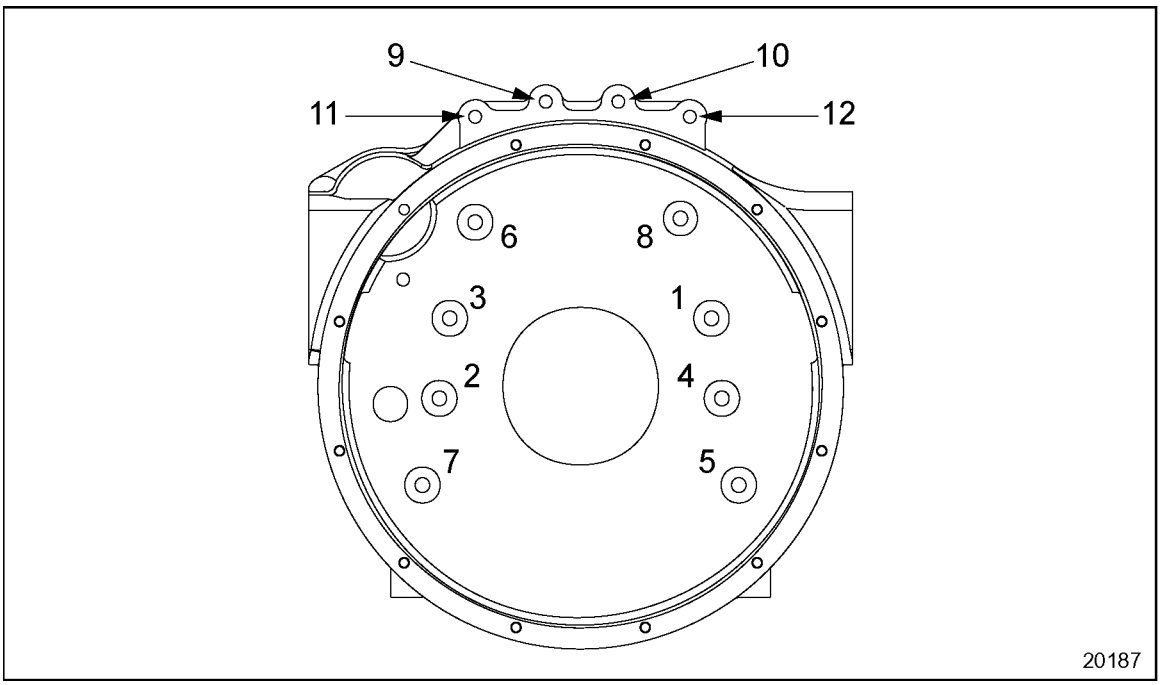

Figure 1-255 Flywheel Housing Bolt Torque Sequence

7. Install the crankshaft rear main oil seal. Refer to section 1.8.7.
8. Install the flywheel. Refer to section 1.14.3.
9. Install oil pan; refer to section 3.11.4, and refill the engine with new oil; refer to section 13.13.1.

 Copyright © 2004 DETROIT DIESEL CORPORATION

1.16.3.1 Test for Flywheel Housing Bore Concentricity

Check the flywheel housing bore concentricity, and bolting flange run-out with tool set, J 9737-C, as follows:

1. Thread the base post, J 9737-3 part of J 9737–D, into one of the tapped holes on the outer edge of the flywheel.
2. Assemble the dial indicators on the base post with the attaching parts provided in the tool set.
3. Position the dial indicators straight and square with the flywheel housing bell face and inside bore of the bell. Make sure each indicator has adequate travel in each direction. See Figure 1-256.

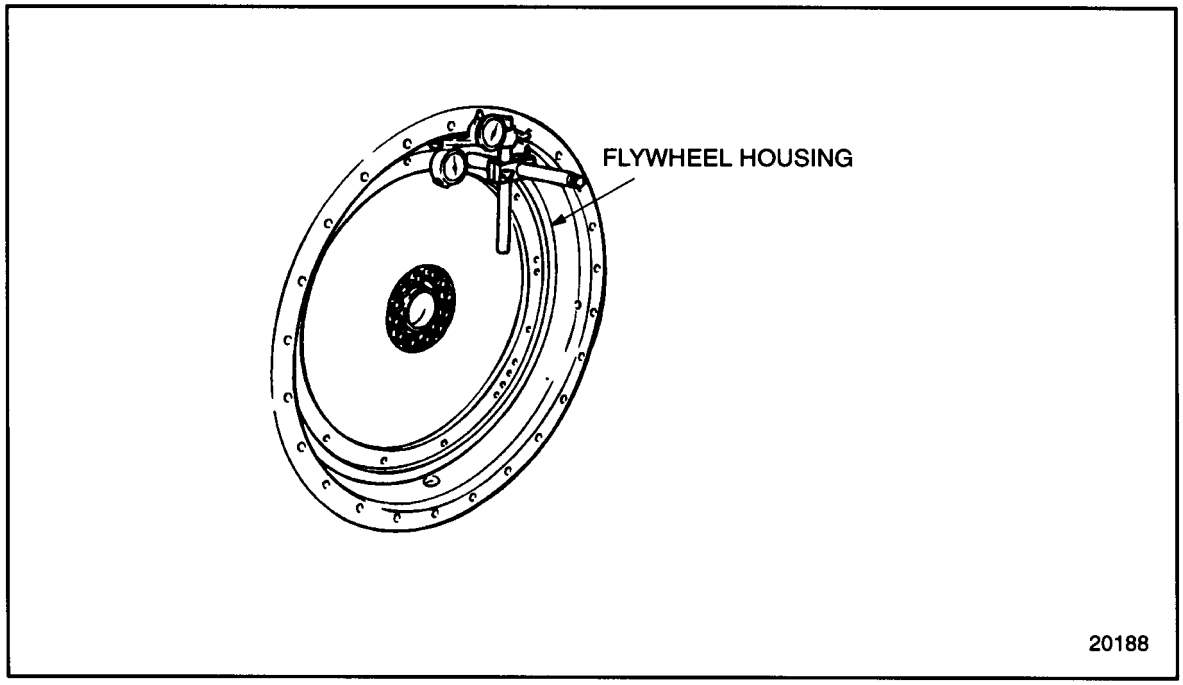

Figure 1-256 Measuring Flywheel Housing Bore Concentricity and Bolting Flange Run-out

4. Tap the end of the crankshaft (not the crankshaft pulley) with a soft hammer to force it toward one end of the block to ensure end play is in one direction only.
5. Adjust each dial indicator to read zero at the twelve o'clock position.

(Rev. 2004) *All information subject to change without notice.*
6SE483 0401 Copyright © 2004 DETROIT DIESEL CORPORATION

6. Bar the engine and rotate the crankshaft one complete revolution, taking readings at 90 degree intervals (four readings each for the bore and bolting flange face). See Figure 1-257.

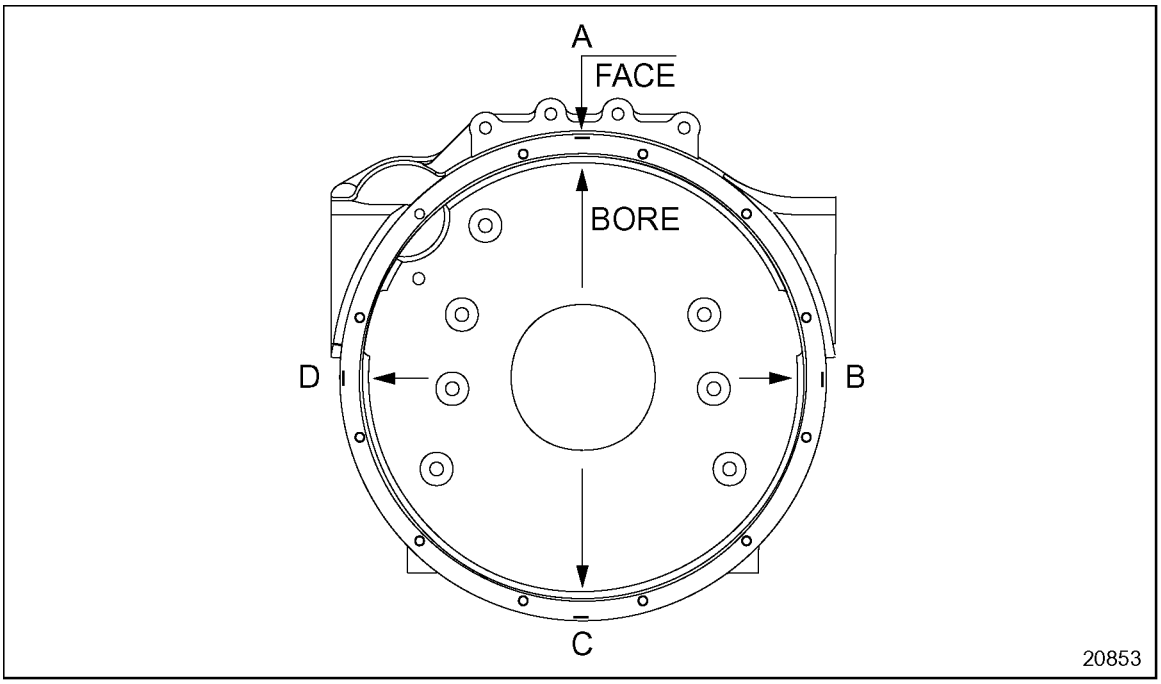

Figure 1-257 Flywheel Housing

7. Remove the wrench or cranking bar before recording each reading to ensure accuracy.
   [a] The maximum total indicator reading must not exceed 0.33 mm (0.013 in.) for either the bore or the face.
   [b] If the run-out exceeds the maximum limits, remove the flywheel and flywheel housing and check for dirt or foreign material between the flywheel housing and the cylinder block or oil pan.
8. Clean the mating surfaces once again. Refer to section "General Information, Cleaning" in the beginning of this manual.
9. Install flywheel housing. Torque the eight short and four long bolts to the cylinder block using the proper tightening sequence. See Figure 1-255.
   [a] If the bolts are 12 mm, torque to 112-126 N·m (83-93 lb·ft).
   [b] If the bolts are 14 mm, torque to 160-200 N·m (118-148 lb·ft).
10. Install the flywheel. Refer to section 1.14.3.
11. Check the run-out again. If desired run-out cannot be accomplished, replace the flywheel housing.

 Copyright © 2004 DETROIT DIESEL CORPORATION

1.17 PISTON AND PISTON RING

Series 60 engines currently use two types of pistons. Non-premium engines use pistons with cast iron domes and skirts and open-end connecting rods. Premium engines (identified by the letters "PK" or "BK" in the fifth and sixth positions of the model number) built on or after March 16, 1998 use pistons with forged steel domes, aluminum skirts, and closed-end connecting rods. High torque engines (identified with "FK" or "HK" in the model number) also uses a steel piston, but of a larger diameter (14L).

NOTE:
Steel and cast iron cylinder components must not be mixed in an engine.

The cast iron cross-head piston is a two-piece piston consisting of a dome and a skirt. The dome and skirt are held together by the piston pin. Ring grooves are machined in the piston dome. See Figure 1-258.

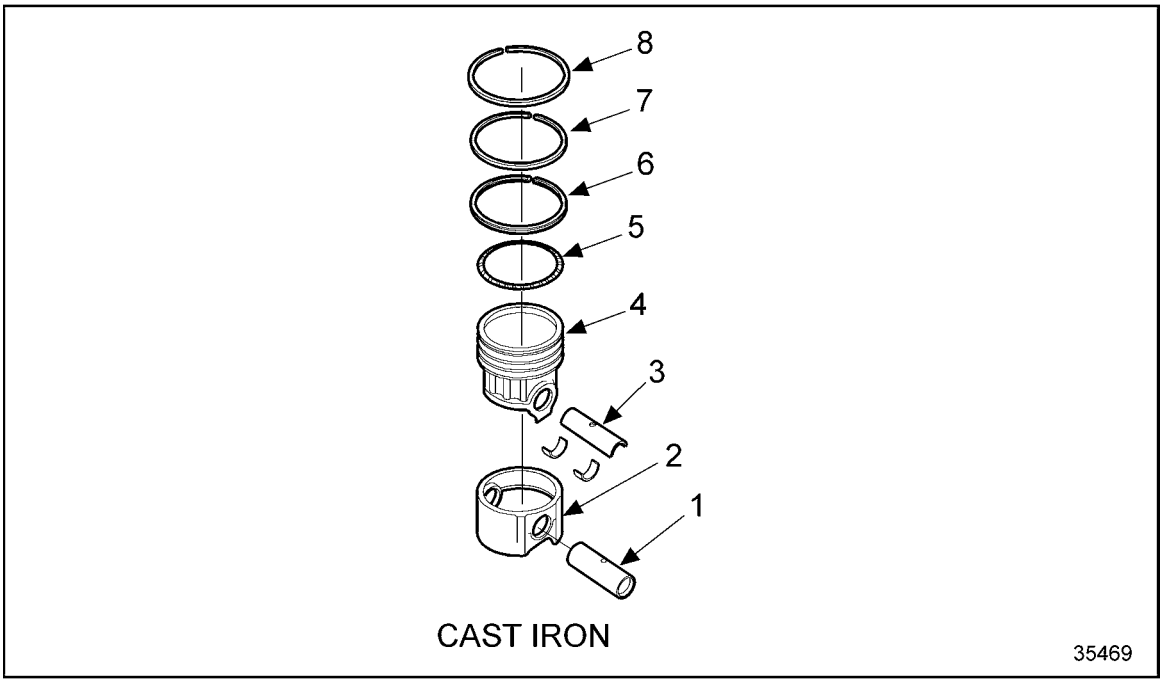

1. Piston Pin
2. Piston Skirt
3. Three-piece Bushing
4. Piston Dome
5. Oil Ring Expander
6. Oil Control Ring
7. Compression Ring
8. Fire Ring

Figure 1-258 Cast Iron Piston and Related Parts

NOTE:
Series 60G engine incorporates a 3.5 mm fire ring, a rectangular cut compression ring and a three-piece oil ring. See Figure 1-259. The compression ring is identified with a purple stripe.

(Rev. 2004) *All information subject to change without notice.*
6SE483 0401 Copyright © 2004 DETROIT DIESEL CORPORATION

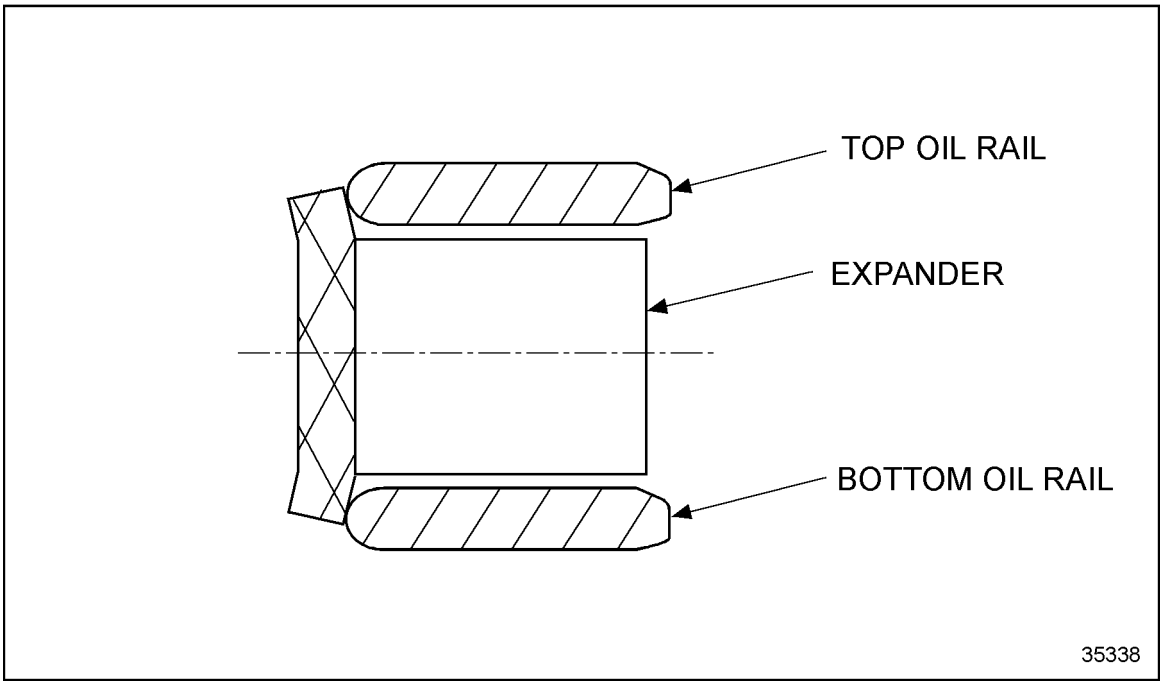

Figure 1-259 Three–piece Gas Oil Ring

 Copyright © 2004 DETROIT DIESEL CORPORATION

Each piston is fitted with a fire ring, compression ring and one-piece oil control ring with expander. See Figure 1-260, and see Figure 1-261.

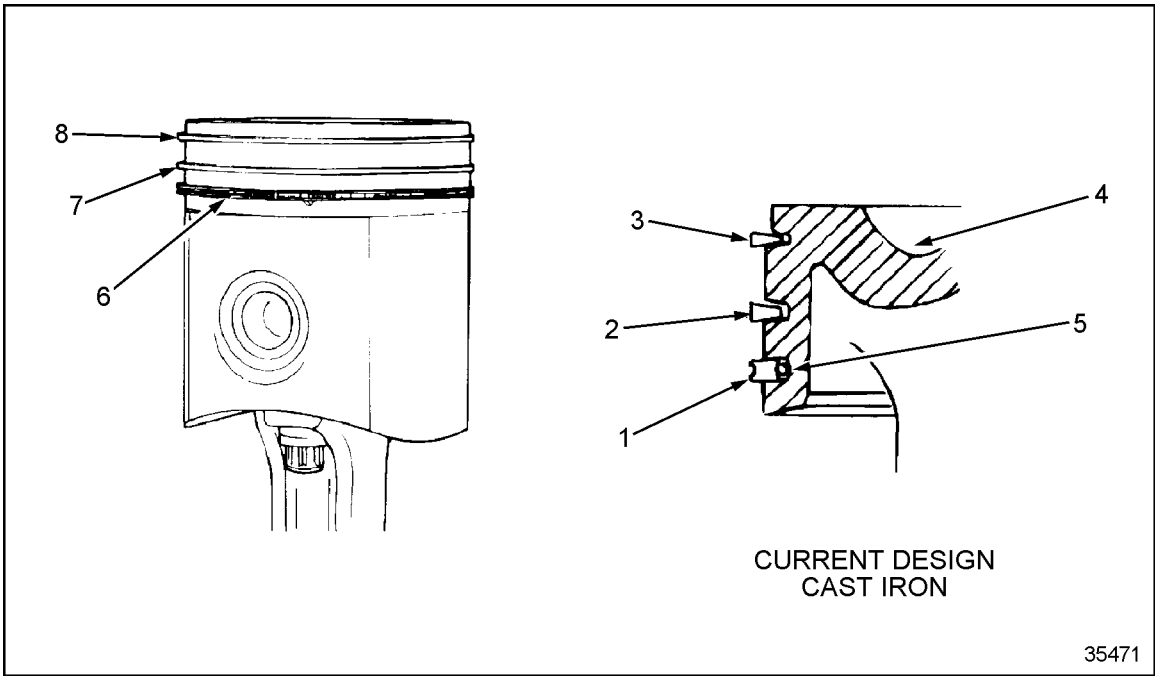

1. Oil Control Ring
2. Compression Ring*
3. Fire Ring
4. Piston Dome
5. Oil Ring Expander
6. Oil Control Ring
7. Compression Ring*
8. Fire Ring*

* Identification Mark to Face Top of Dome

Figure 1-260 Piston Ring Location

(Rev. 2004) *All information subject to change without notice.*
6SE483 0401 Copyright © 2004 DETROIT DIESEL CORPORATION

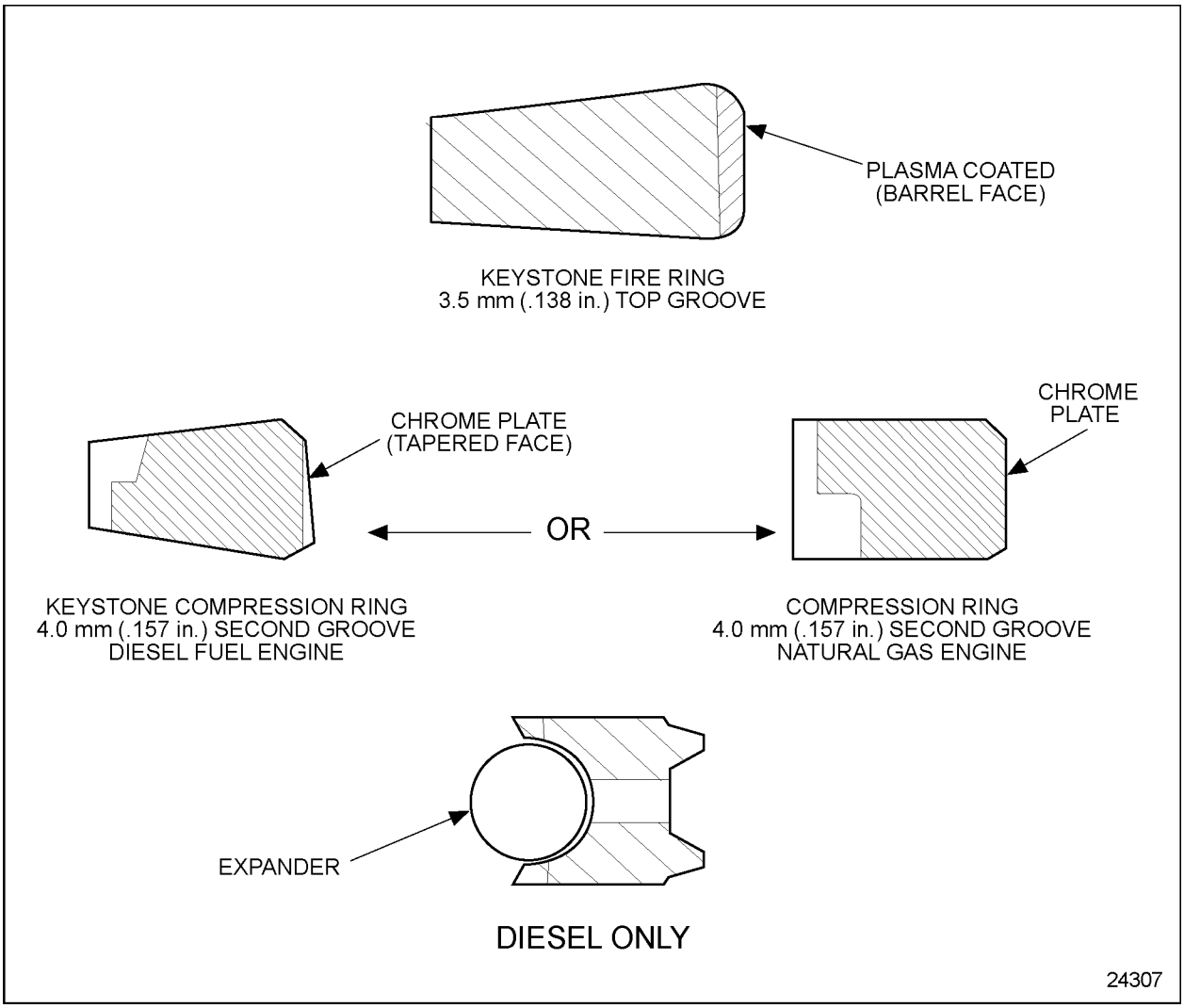

Figure 1-261 Comparison of Piston Ring Packs

 Copyright © 2004 DETROIT DIESEL CORPORATION

The forged steel cross-head piston is two-piece piston consisting of a dome and a skirt. The dome and skirt are held together by the piston pin. Ring grooves are machined in the piston dome. See Figure 1-262.

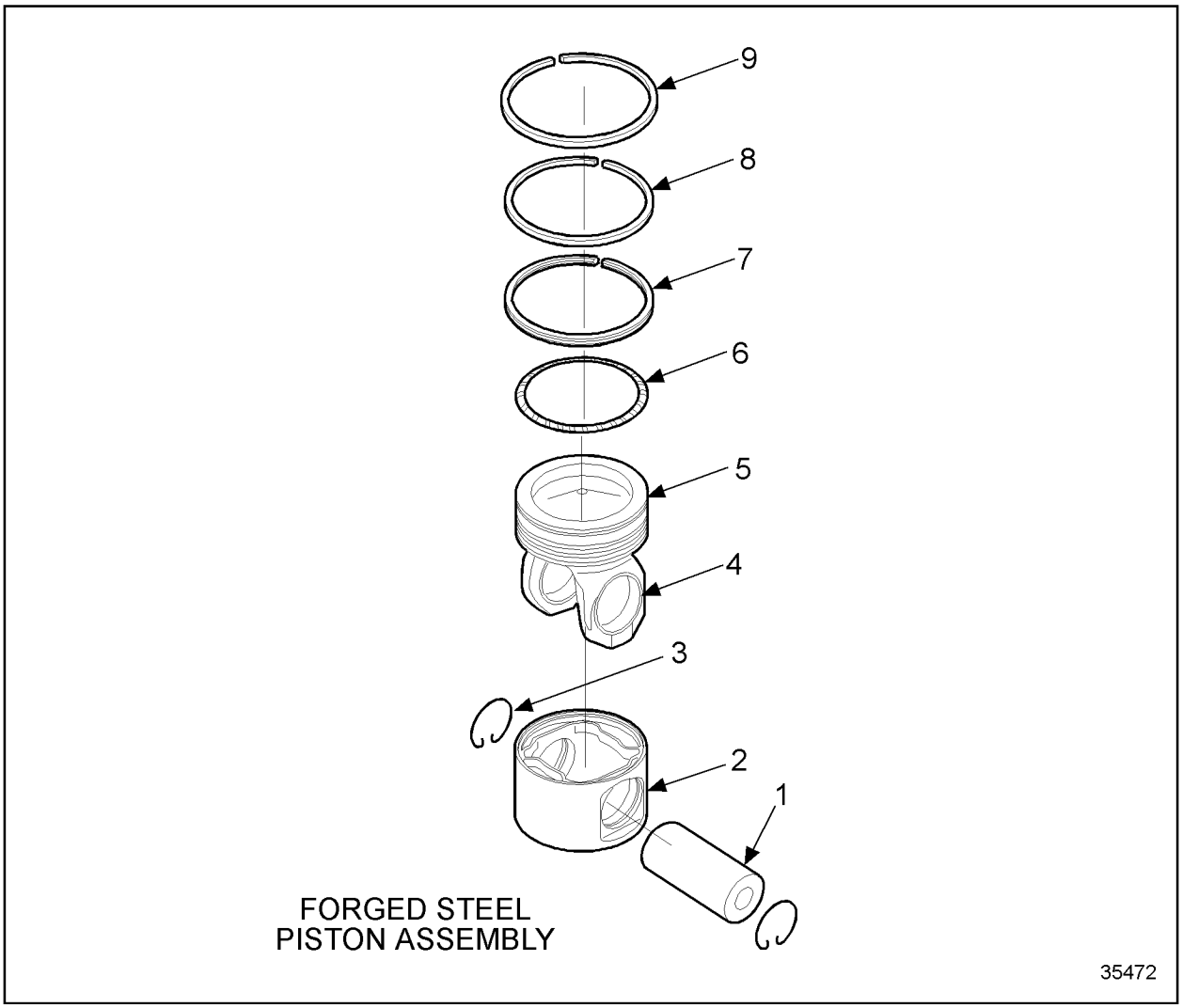

1. Piston Pin
2. Piston Skirt
3. Snap Ring
4. Piston Pin Bushing
5. Piston Dome
6. Oil Ring Expander
7. Oil Control Ring
8. Compression Ring
9. Fire Ring

Figure 1-262 Forged Steel Piston and Related Parts

(Rev. 2004) *All information subject to change without notice.*
6SE483 0401 Copyright © 2004 DETROIT DIESEL CORPORATION

Each piston is fitted with a fire ring, compression ring, and one-piece oil control ring with expander.

The fire and compression rings are installed with the "football" mark facing up, see Figure 1-263.

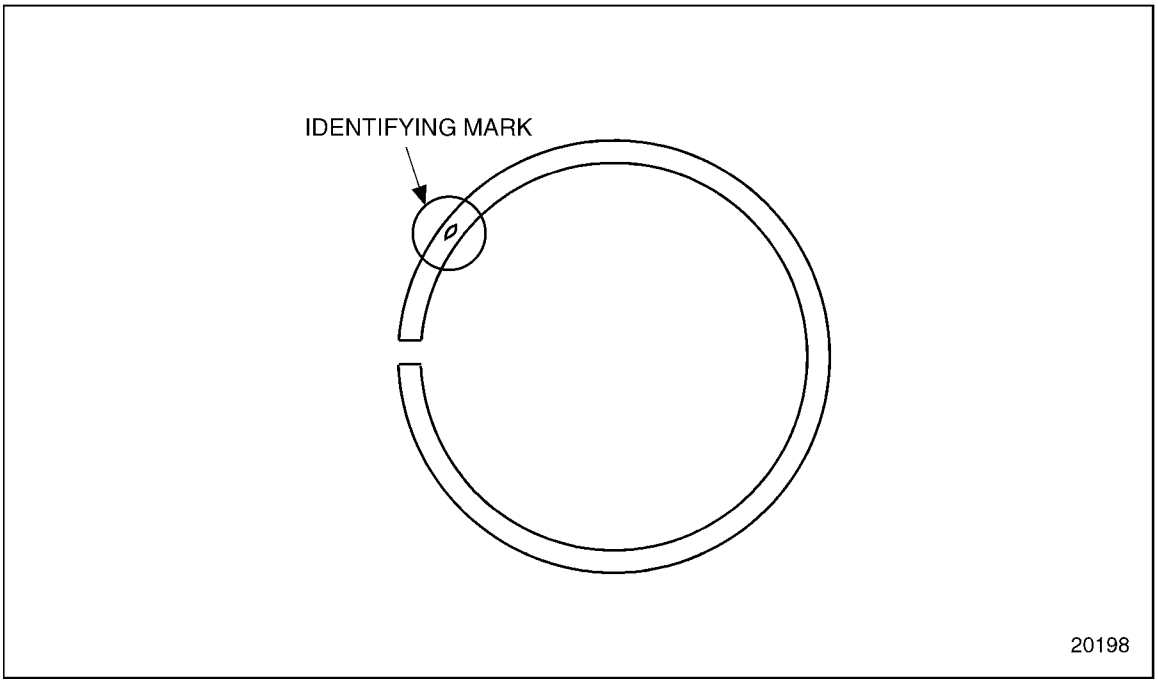

Figure 1-263 Fire and Compression Ring Identification

A one-piece oil control ring is used in the third groove. The expander is of Spira-Lox construction.

The forged steel piston uses a floating piston pin which rides on the one-piece bushing pressed into the end of the connecting rod.

The connecting rod and solid-core piston pin do not have drilled center orifices for lubrication. Oil for lubrication and cooling is supplied by oil spray from piston-cooling nozzles installed at the bottom of each piston bore.

During engine operation, gas loads pushing down on the piston dome are taken directly by the piston pin and connecting rod bushing. The piston skirt, being separate, is free from vertical load distortion. Thermal distortion is also reduced as the piston dome expands. As the connecting rod swings to one side on the downward travel of the piston, the major portion of the side thrust is taken by the piston skirt.

 Copyright © 2004 DETROIT DIESEL CORPORATION

Two oil relief channels are drilled into the oil ring groove area, on each side of the dome, just above the piston pin bore. These channels are not drilled through the piston. The channels help the excess oil, scraped from the cylinder walls, return to the crankcase. See Figure 1-264.

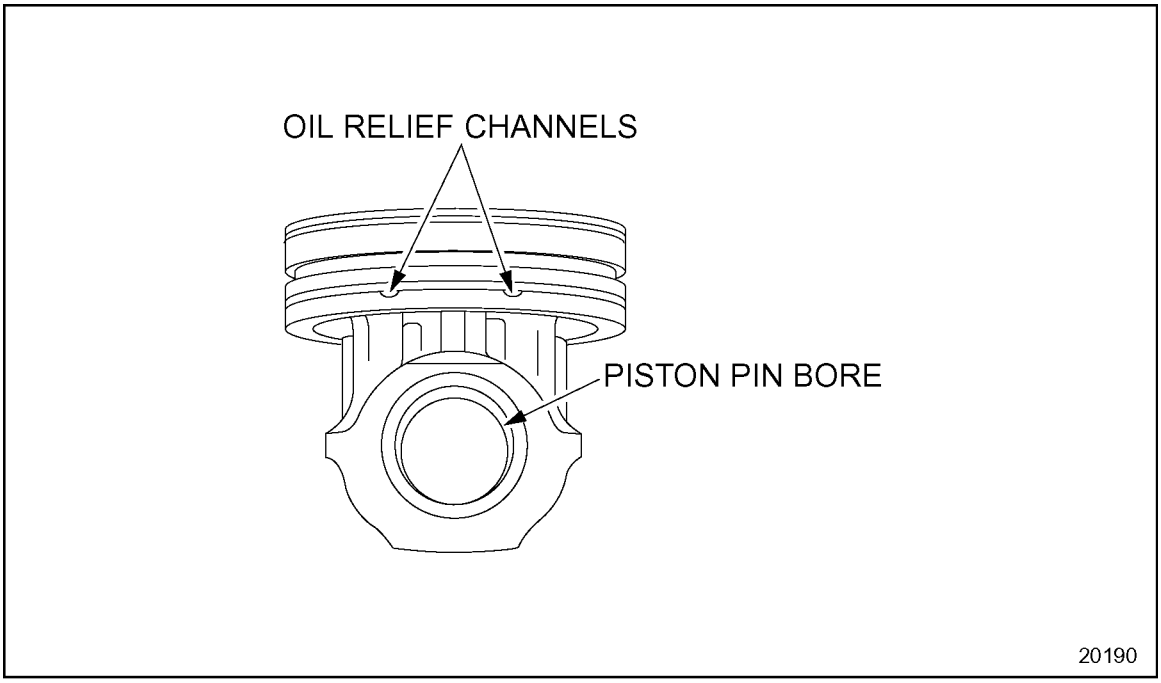

Figure 1-264 Piston Oil Relief Channels

Two cast iron dome designs have been used in Series 60 engines. The earlier design had a non-serviceable bearing. The piston dome and piston pin bearing of the most recent design are separate parts and may be serviced separately.

Two special bolts and spacers are used to attach the connecting rod to the piston pin.

(Rev. 2004) *All information subject to change without notice.*
6SE483 0401 Copyright © 2004 DETROIT DIESEL CORPORATION

The solid-core piston pin has a drilled hole through the center to provide lubricating oil to the piston dome for cooling. A threaded hole on each side of the oil hole receives the connecting rod attaching bolts. See Figure 1-265.

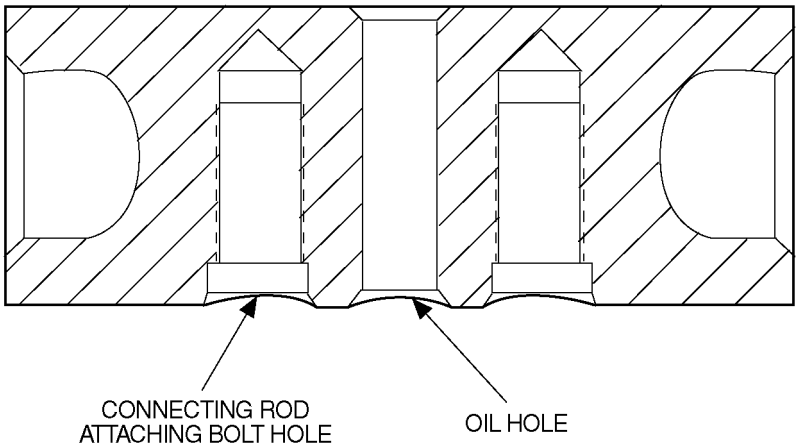

Figure 1-265 Piston Pin Cross Section

Internal parts of the piston are lubricated and cooled by the engine lubricating oil. Oil is pressure-fed up the drilled passage in the connecting rod, through the piston pin, then through the center hole in the bearing to the underside of the piston dome. A portion of the oil lubricates the piston pin and bearing.

During engine operation, gas loads pushing down on the piston dome are taken directly by the piston pin and bearing. The piston skirt, being separate, is free from vertical load distortion. Thermal distortion is also reduced as the piston dome expands. As the connecting rod swings to one side on the downward travel of the piston, the major portion of the side thrust is taken by the piston skirt.

 Copyright © 2004 DETROIT DIESEL CORPORATION

1.17.1 Repair or Replacement of Piston and Piston Ring

To determine if repair is possible or replacement is necessary, perform the following procedure. See Figure 1-266.

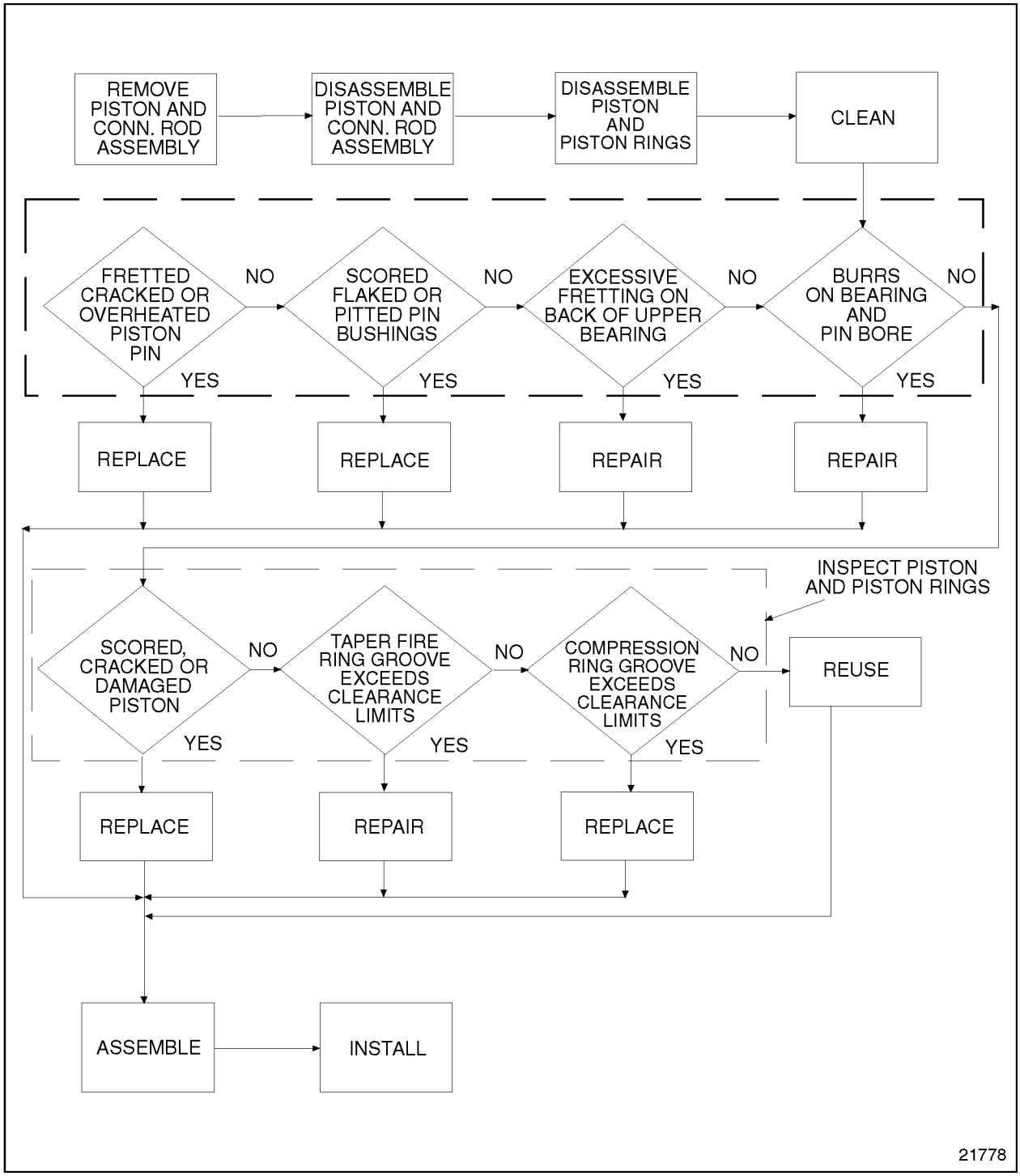

Figure 1-266 Flowchart for Repair or Replacement of Piston and Piston Rings

(Rev. 2004) *All information subject to change without notice.*
6SE483 0401 Copyright © 2004 DETROIT DIESEL CORPORATION

1.17.2 Removal and Cleaning of Piston and Piston Ring

Refer to section 1.19.2 for piston and connecting rod assembly removal procedure.

1.17.3 Disassembly of Piston and Piston Ring

Disassemble the piston and piston rings as follows:

1. Remove the piston rings with tool J 22405-02. See Figure 1-267.

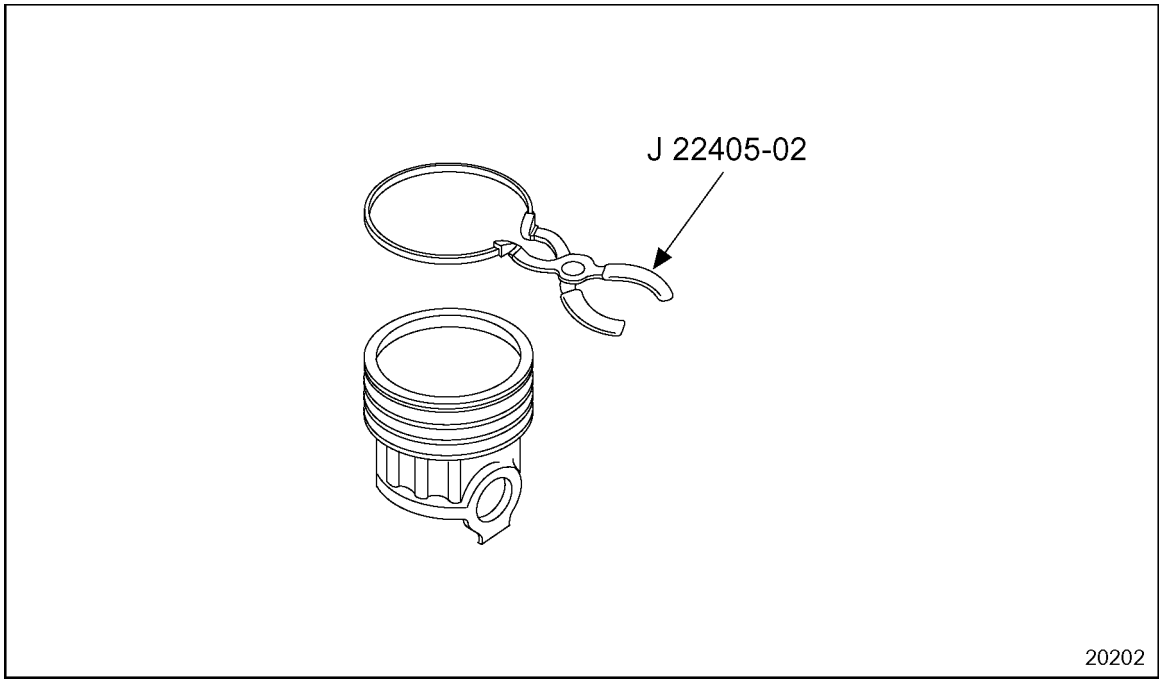

Figure 1-267 Removal of Piston Rings

NOTICE:
The pin, bushing, skirt and dome must be match-marked to assure proper position and orientation.

2. Withdraw the piston pin and mark the front of the piston with a paint pencil, so it can be returned to the correct cylinder location.

NOTE:
Steel pistons will require the removal of the circlip before withdrawing the piston pin.

 Copyright © 2004 DETROIT DIESEL CORPORATION

3. Perform the following steps on current cast iron domes:
   [a] Separate the piston skirt from the piston dome and mark the front of the dome ear and skirt with a paint pencil, so they can be returned to the correct location.
   [b] Remove the piston pin bearings, marking the front of them with a paint pencil, so they can be returned to the correct location.

NOTE:
Bearings are not serviced separately on steel pistons.

NOTE:
The lower pin bore bearings are removed from the pin bore first, by pushing the bearing legs outward by hand at the split lines from inside the dome saddle ear. The upper bearing may be held in the bore by oil on the back of the bearing, making removal from the pin bore by hand difficult.

CAUTION:

To avoid injury from flying debris when using compressed air, wear adequate eye protection (face shield or safety goggles) and do not exceed 40 psi (276 kPa) air pressure.

NOTICE:

Prying between the bearing back and dome bore may damage the dome saddle bore or raise burrs which will make installation of new bearings difficult.

DDC recommends that compressed air be directed between the dome pin bore and back of the bearing at one end until the bearing pops up out of the bearing retaining hole.

(Rev. 2004) *All information subject to change without notice.*
6SE483 0401 Copyright © 2004 DETROIT DIESEL CORPORATION

1.17.3.1 Inspection of Piston and Piston Rings

Clean the piston and piston rings prior to inspection as follows:

NOTICE:

Do not attempt to clean the piston skirt by glass beading. It will remove the tinplating. Do not refinish or polish the piston pin.

1. Clean the piston components with fuel oil.

CAUTION:

To avoid injury from flying debris when using compressed air, wear adequate eye protection (face shield or safety goggles) and do not exceed 40 psi (276 kPa) air pressure.

2. Dry the piston components with compressed air.
3. If fuel oil does not remove the carbon deposits, use a chemical solvent that will not harm the tinplate on the piston skirt.

NOTICE:

After cleaning, do not leave glass beads in the piston dome. **Do not allow the glass beading to contact any area of the piston pin bushing or pin bore.** Glass beading will remove the tinplating.

4. The piston dome, including the compression ring grooves, is not tin-plated and may be wire-brushed to remove any hard carbon. Glass beading can be used to clean a piston dome. Micro Bead Glass Shot MS-M 0.0736-0.1473 mm (0.0029 -0.0058 in.) is recommended. The machine used for this process must be able to withstand air pressures of 552-689 kPa (80-100 lb/in.^{2}).

NOTE:
Do not wire-brush the piston skirt.

5. Clean the ring grooves with a suitable tool or a piece of an old compression ring that has been ground to a bevel edge.
6. Clean the inside surfaces of the piston dome and skirt and the oil relief channels in the oil ring grooves.

 Copyright © 2004 DETROIT DIESEL CORPORATION

Inspect the piston and piston rings as follows:

1. Inspect the piston skirt and dome.
   [a] Check the skirt and dome for score marks, cracks, damaged ring grooves or overheating indications.
   [b] If any of these indications are present, replace the piston.

NOTE:
Burn spots may indicate an obstruction in the connecting rod or piston pin oil passage.

2. Inspect the tapered fire ring groove (top) in the piston dome.
   [a] Using the piston ring land step gage, J 35884-A (2.5 mm ring groove) or J 38609 (3.5 mm ring groove), check tapered fire ring groove. See Figure 1-268.
   [b] Insert the center tang of the tool gage into the top piston ring groove ash. See Figure 1-268.
   [c] Hold the tool at a 90 degree angle to the ring groove to prevent false readings.
   [d] With the center tang into the ring groove as far as it will go, there should be no contact of the piston with the shoulders of the gage. If the gage makes contact at point A or point B, the fire ring groove is worn beyond usable limits. Check the groove clearance at four spots, at 90 degree intervals. Measure the ring land parallel to and at 90 degrees to the wrist pin.
   [e] If fire ring groove is worn beyond usable limits, replace piston dome.

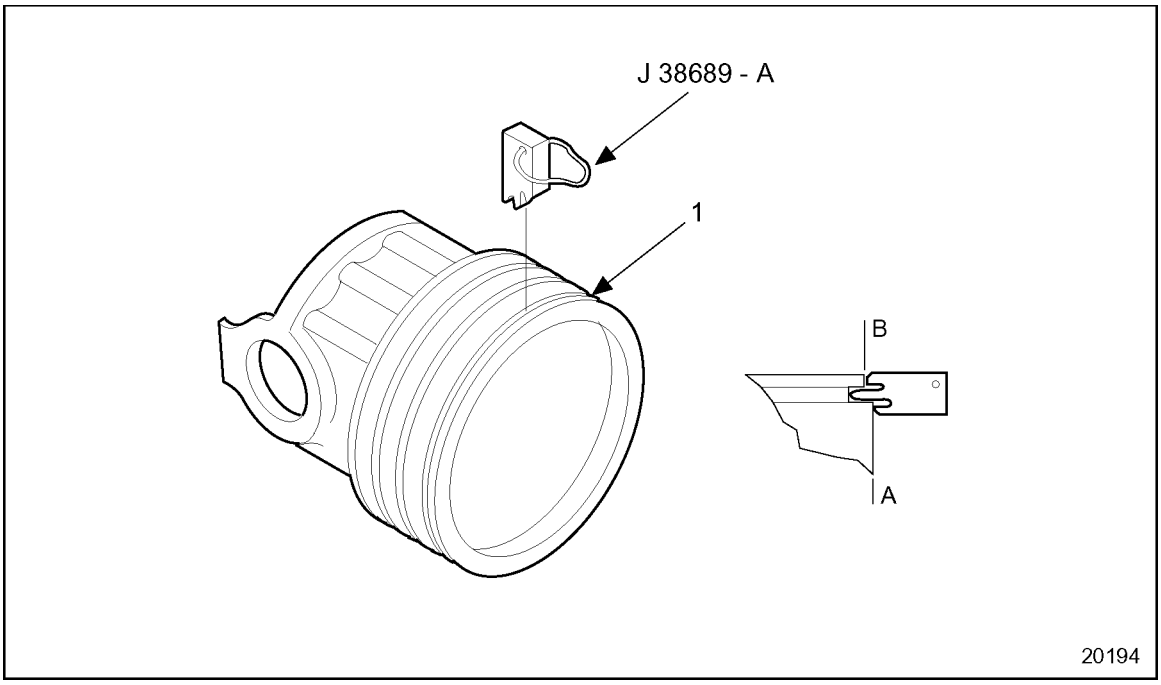

1. Fire Ring Groove

Figure 1-268 Checking Fire Ring Groove

(Rev. 2004) *All information subject to change without notice.*
6SE483 0401 Copyright © 2004 DETROIT DIESEL CORPORATION

3. Inspect tapered compression ring groove (second) in the piston dome.
   [a] Using piston ring land step gage, check the groove as in the compression ring groove.
   [b] If the compression ring groove is worn beyond usable limits, replace piston dome.
4. Inspect the piston pin.
   [a] Check the piston pin for fretting, cracking or signs of overheating.
   [b] If these are detected, replace piston pin.
   [c] Measure piston pin outside diameter. Specifications are listed in Table 1-22.
   [d] If piston pin is out of specifications, replace with new part.

NOTE:
If piston pin used with a cast iron piston is replaced for any reason, the piston pin bushing for that cylinder must also be replaced.

NOTE:
If the piston pin used on steel dome engines is replaced for any reason, the dome must also be replaced for that cylinder.

5. Inspect the piston pin bushings as follows:
   [a] Check the piston pin bushings for scoring, pitting, flaking, cracking, excessive wear, or signs of overheating.
   [b] If these conditions are present, the bearings must be replaced.

NOTE:
On steel dome engines, if bearing replacement is necessary then the dome assembly must be replaced as well.

NOTE:
Early second keystroke ring (SKR) design piston domes have an integral piston pin bushing. The piston pin bushing cannot be replaced in these piston domes. If there is distress to the piston pin bushing, the entire piston dome assembly must be replaced, with current cast iron design.

NOTICE:
If a piston pin bushing is replaced for any reason, the piston pin for that cylinder must also be replaced.

6. Inspect the back of the upper bushing.
   [a] Check the bushing for excessive fretting.
   [b] If excessive fretting is evident, replace all three bushings.
   [c] The corresponding fretting in the piston dome can be removed using crocus cloth, wet with fuel oil.

 Copyright © 2004 DETROIT DIESEL CORPORATION

7. On steel piston engines, inspect the connecting rod bushing.
   [a] Check the bushing for excessive fretting.
   [b] If excessive fretting is evident, replace the connecting rod assembly.
8. Inspect the edges of the bearings and piston dome pin bore.
   [a] Check the edges of the bearing and piston dome pin bore for dents and dings.
   [b] If any are found, it is acceptable to remove burrs at the bearings or pin bore edges by careful filing.

NOTE:
Remove any dirt or debris on the backs of the bearing or dome pin bore that may take up clearance required for bearing or piston pin installation.

9. If the piston pin used with a forged steel piston is replaced for any reason, the connecting rod bushing *must* be inspected for wear before the rod is installed. If the bushing is worn beyond limits, the connecting rod *must* be replaced. Refer to section 1.17.3.1 for connecting rod bushing inspection procedure.
10. Check the cylinder liner and block bore for excessive out-of-round, taper and high spots which could cause failure of the piston. Specifications are listed in Table 1-18.
11. Check the block bore for excessive out-of-round, taper, and high spots that could cause failure of the piston. Specifications are listed in Table 1-17.

(Rev. 2004) *All information subject to change without notice.*
6SE483 0401 Copyright © 2004 DETROIT DIESEL CORPORATION

1.17.4 Assembly of Piston and Piston Rings

Prior to installing the piston rings, the ring gap of each piston ring must be measured.

1. Insert the piston rings inside of the cylinder liner one at a time, using a piston dome (inserted upside down into the liner) to push the ring down. The piston dome should be inserted into the liner, to the same depth as the ring being positioned.
2. For the oil control ring, insert the piston dome down into the liner, until the oil control ring land is just into the liner. This will ensure that the rings are parallel with the top of the liner, and that they are positioned in the liner within the normal area of ring travel.
3. After the three rings have been positioned in the liner, measure the ring gap of the top ring with a feeler gage. See Figure 1-269. Remove the ring from the liner after the measurement is complete.

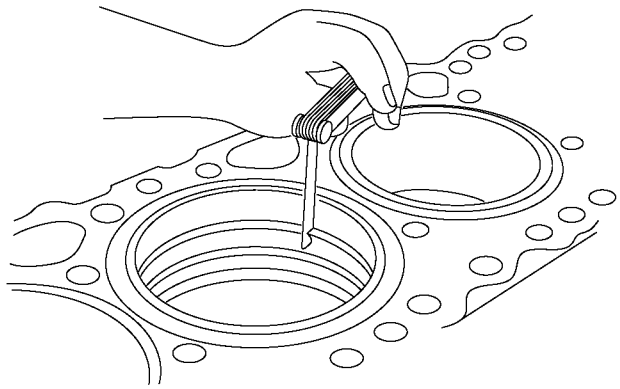

Figure 1-269 Piston Ring Gap Measurement

 Copyright © 2004 DETROIT DIESEL CORPORATION

4. Repeat this procedure for each ring, and record your measurements. Allowable ring end gaps are listed in Table 1-5and listed in Table 1-6.

Ring	Ring End Gap
Fire Ring (2.5 mm [0.098 in.] chrome)	0.40 - 0.87 mm (0.016 - 0.034 in.)
14L Fire Ring: 3.0 mm (0.118 in.)	0.60 - 0.85 mm (0.024 - 0.033 in.)
Fire Ring (3.5 mm [0.138 in.] plasma)	0.51 - 0.87 mm (0.020 - 0.034 in.)
Compression Ring	0.81 - 1.31 mm (0.032 - 0.051 in.)
14L Compression Ring	0.63 - 0.98 mm (0.025 - 0.039 in.)
Oil Control Ring	0.40 - 0.81 mm (0.016 - 0.032 in.)
14L Oil Control Ring	0.21 - 0.51 mm (0.008 - 0.020 in.)

Table 1-5 Allowable Ring End Gap — All Diesel (Except Pleasure Craft Marine) Engines

Ring	Ring End Gap
12.7L Fire Ring: 3.0 mm (0.118 in.)	0.60 - 0.80 mm (0.024 - 0.031 in.)
Compression Ring	0.81 - 1.31 mm (0.032 - 0.051 in.)
Oil Control Ring	0.40 - 0.81 mm (0.016 - 0.032 in.)

Table 1-6 Allowable Ring End Gap — Pleasure Craft Marine Engine

5. Refer to section 1.17.5for assembly of rings for diesel engines or refer to section 1.17.6for Series 60G engines.

(Rev. 2004) *All information subject to change without notice.*
6SE483 0401 Copyright © 2004 DETROIT DIESEL CORPORATION

1.17.5 Assembly of S60 Diesel Piston Rings

Assemble the piston and piston pin rings as follows:

1. Install the ring expander in the oil control ring groove in the piston. See Figure 1-270.

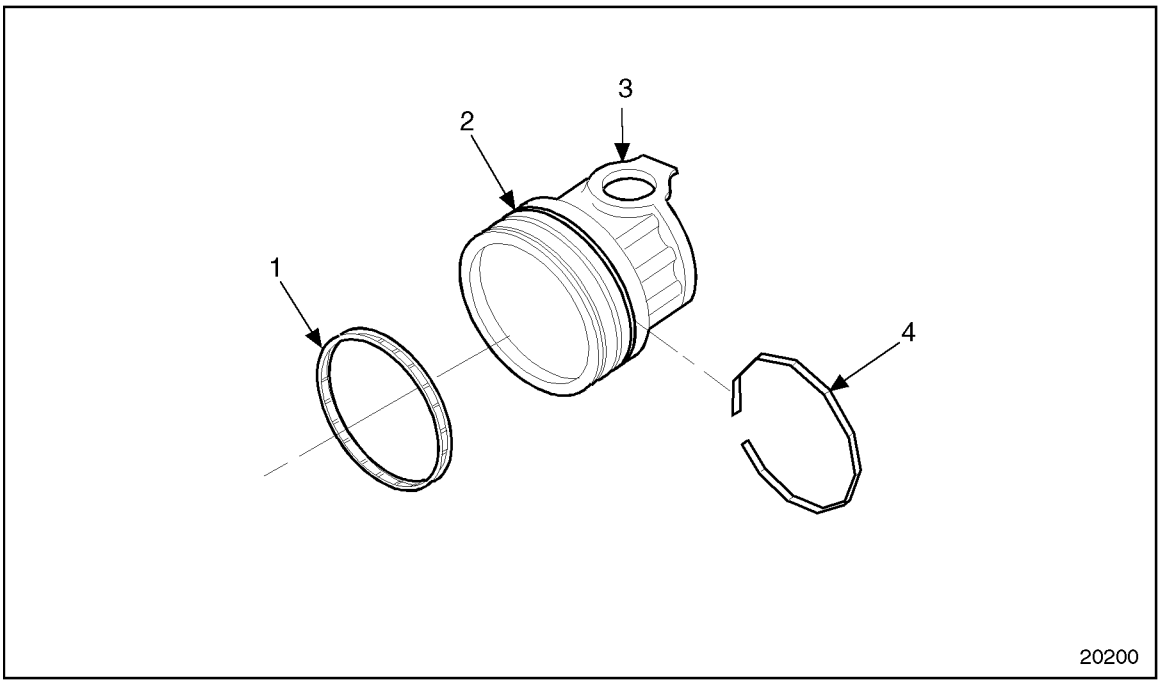

1. Oil Control Ring
2. Oil Control Ring Groove
3. Piston
4. Oil Control Ring Expander

Figure 1-270 Piston Ring Installation (Diesel)

 Copyright © 2004 DETROIT DIESEL CORPORATION

2. Install the oil control ring by hand. See Figure 1-271.

NOTE:
The oil control ring may be installed in either direction.

NOTE:
Install expander into inside diameter groove of ring with expander spring gap located 180° from the oil control ring gap.

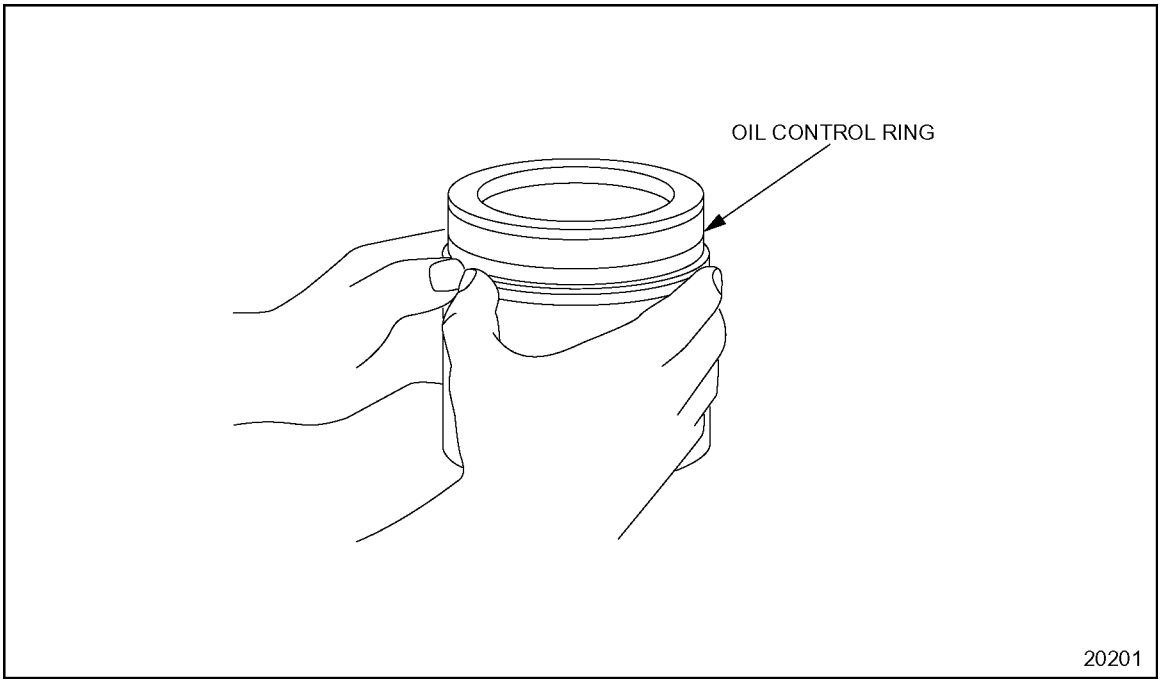

Figure 1-271 Oil Control Ring Installation (Diesel)

NOTE:
The oil control ring expander has a white paint stripe. Make sure the paint mark can be seen after the oil control ring is installed at ring gap.

(Rev. 2004) *All information subject to change without notice.*
6SE483 0401 Copyright © 2004 DETROIT DIESEL CORPORATION

Install the fire and compression rings as follows:

NOTICE:
To avoid breaking or overstressing the rings, do not spread them any more than necessary to slip them over the piston dome.

1. Starting with the compression ring (second groove), install the compression ring and fire ring with tool J 22405-02. See Figure 1-272. Make sure the identifying dimple on the rings is installed up, toward the dome of the piston. See Figure 1-263for ring identification and locations.
2. Stagger the ring gaps around the piston. See Figure 1-272.

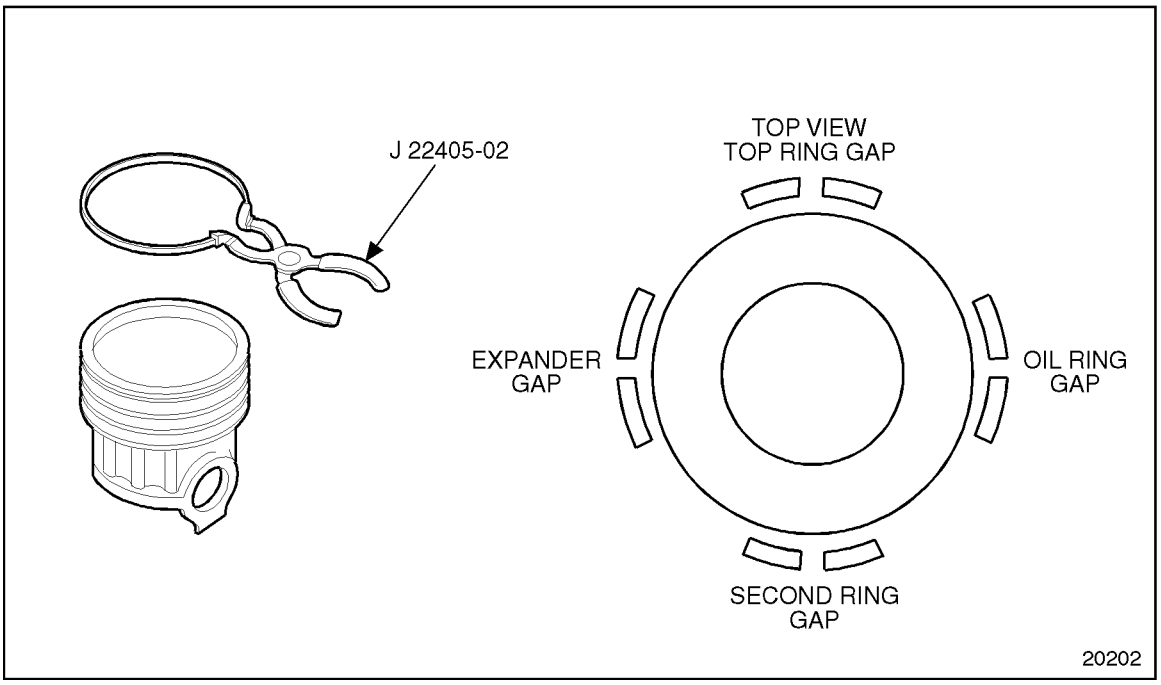

Figure 1-272 Piston Ring Positioning (Diesel)

3. Refer to section 1.19.4 for piston and connecting rod assembly procedure.

 Copyright © 2004 DETROIT DIESEL CORPORATION

1.17.6 Assembly of Series 60G Piston Rings

Install the oil control ring for the Series 60G engine as follows:

1. Install the expander in the bottom groove of the piston.
2. Install the upper and lower rails ensuring one is on the upper side of the expander and the other is on the lower side of the expander.

NOTE:
The expander and both rails may be installed with either side up. There is no "football" mark on any of the three oil ring components for natural gas engines.

3. Orient the ring gaps of the rails 180 degrees apart so that they align with the paint marks on the expander. The expander should be 90 degrees from the oil ring gaps.

Install the compression and fire ring for the Series 60G engine as follows:

1. Install the compression ring (rectangular cut shape) in the second groove of the piston, using tool J 22405-02. See Figure 1-273.

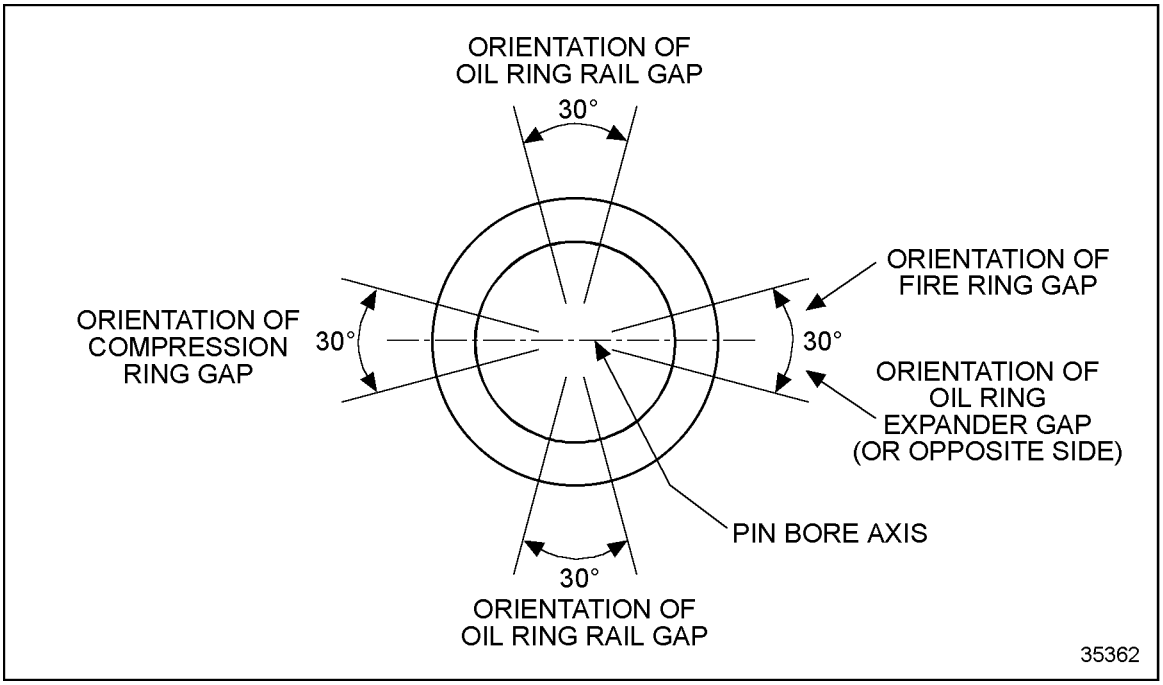

Figure 1-273 Installation of Compression Ring with J 22405–02

2. Install the fire ring in the top groove of the piston, using tool J 22405-02.

(Rev. 2004) *All information subject to change without notice.*
6SE483 0401 Copyright © 2004 DETROIT DIESEL CORPORATION

3. Stagger the ring gaps around the piston. See Figure 1-274.

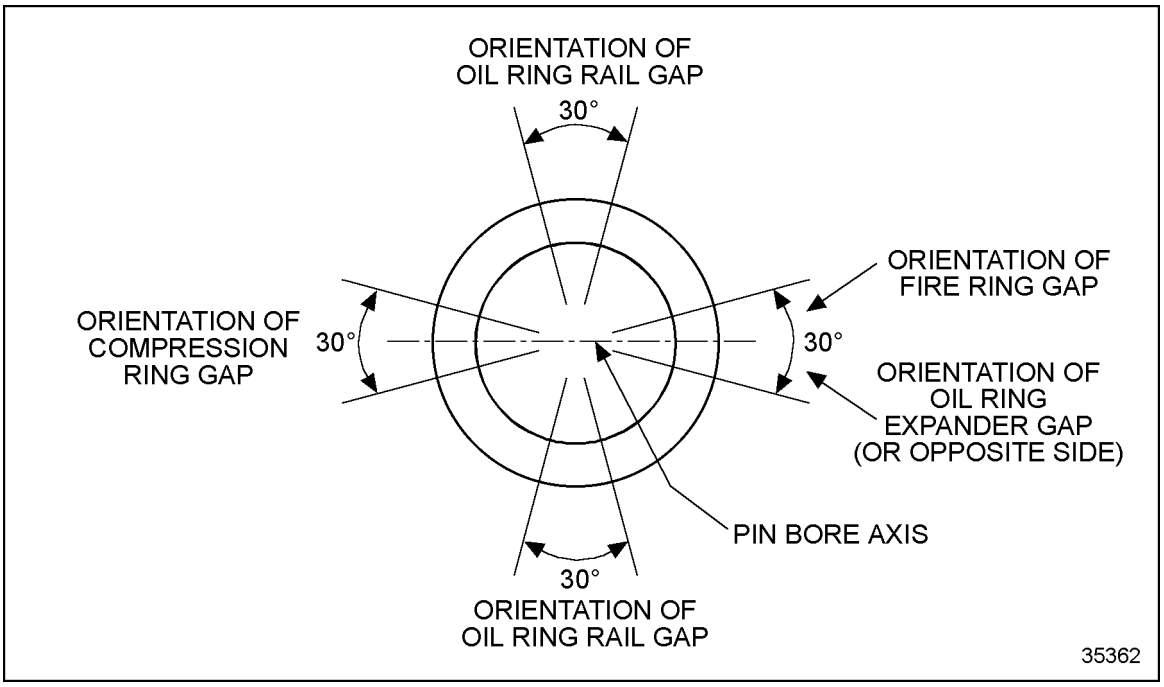

Figure 1-274 Top View of Piston Dome

4. Refer to section 1.19.4 for piston and connecting rod assembly procedure.

 Copyright © 2004 DETROIT DIESEL CORPORATION

(Rev. 2004) *All information subject to change without notice.*
6SE483 0401 Copyright © 2004 DETROIT DIESEL CORPORATION

1.18 FORGED STEEL ONE PIECE PISTON ASSEMBLY AND PISTON RING

Series 60 engines with Exhaust Gas Recirulation (EGR) systems built after December 1, 2003 will use a forged steel one piece piston assembly, incorporating the dome and skirt. The new piston reduces friction, improves ring cooling and has a higher compression ratio of 17.25:1 for 12L and 16.75:1 for 14L.

NOTE:
The forged steel one piece piston assembly is to be used only for On-Highway applications.

Ring grooves are machined into the piston assembly. The forged steel piston will not require the use of bushings see Figure 1-275.

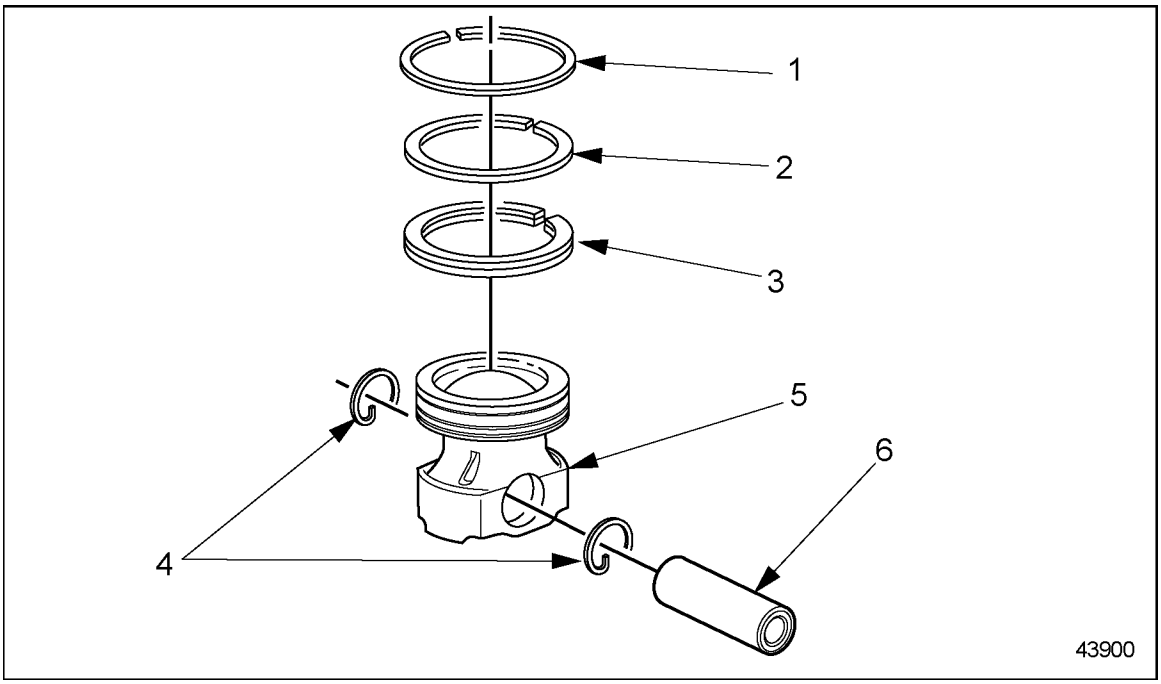

1. Fire Ring
2. Compression Ring
3. Oil Control Ring with Expander
4. Retainer
5. Piston Assembly
6. Piston Pin

Figure 1-275 One Piece Forged Steel Piston Assembly

 Copyright © 2004 DETROIT DIESEL CORPORATION

Each diesel piston is fitted with a fire ring, compression ring and one-piece oil control ring with expander. See Figure 1-276 and see Figure 1-277.

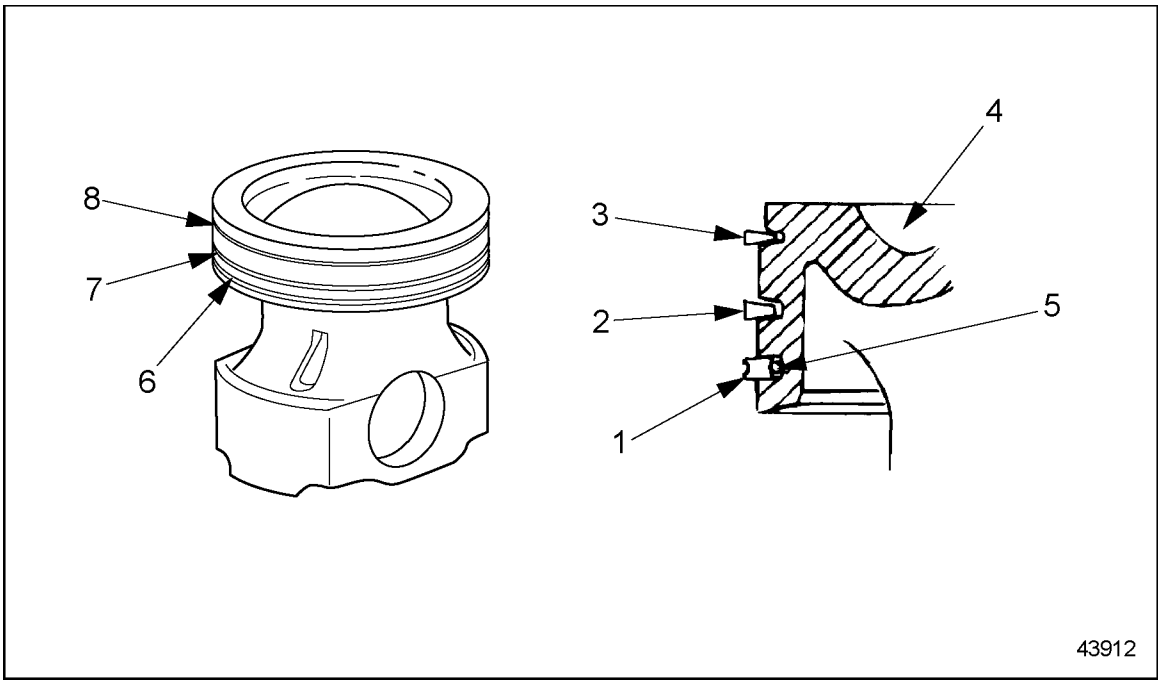

1. Oil Control Ring
2. Compression Ring*
3. Fire Ring*
4. Piston Assembly
5. Oil Ring Expander
6. Oil Control Ring
7. Compression Ring*
8. Fire Ring*

* Identification Mark to Face Top of Dome

Figure 1-276 Forged Steel One Piece Piston Assembly Ring Location

(Rev. 2004) *All information subject to change without notice.*
6SE483 0401 Copyright © 2004 DETROIT DIESEL CORPORATION

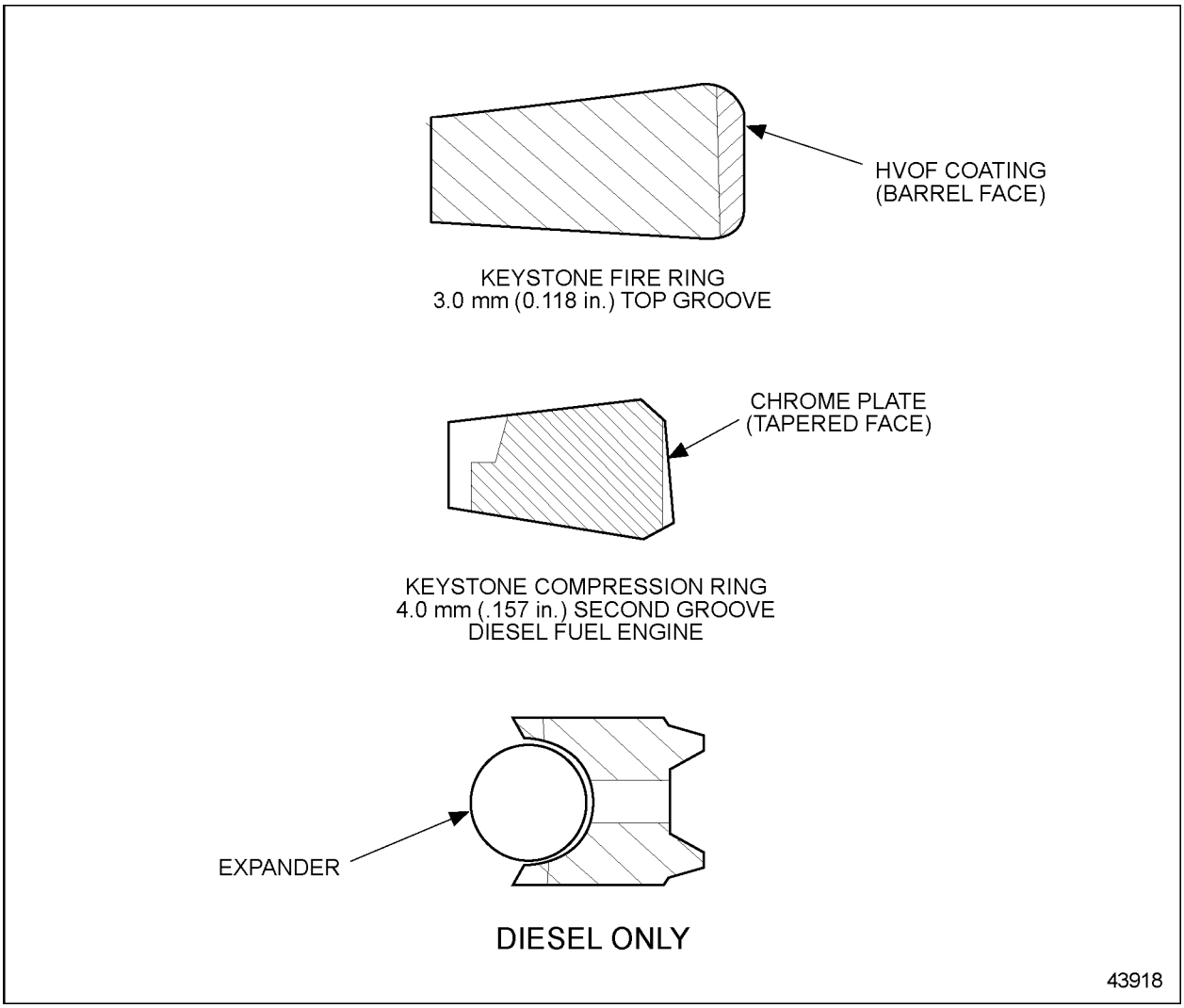

Figure 1-277 Comparision of Piston Ring Packs

 Copyright © 2004 DETROIT DIESEL CORPORATION

The fire and compression rings are installed with the “identification” mark facing up, see Figure 1-278.

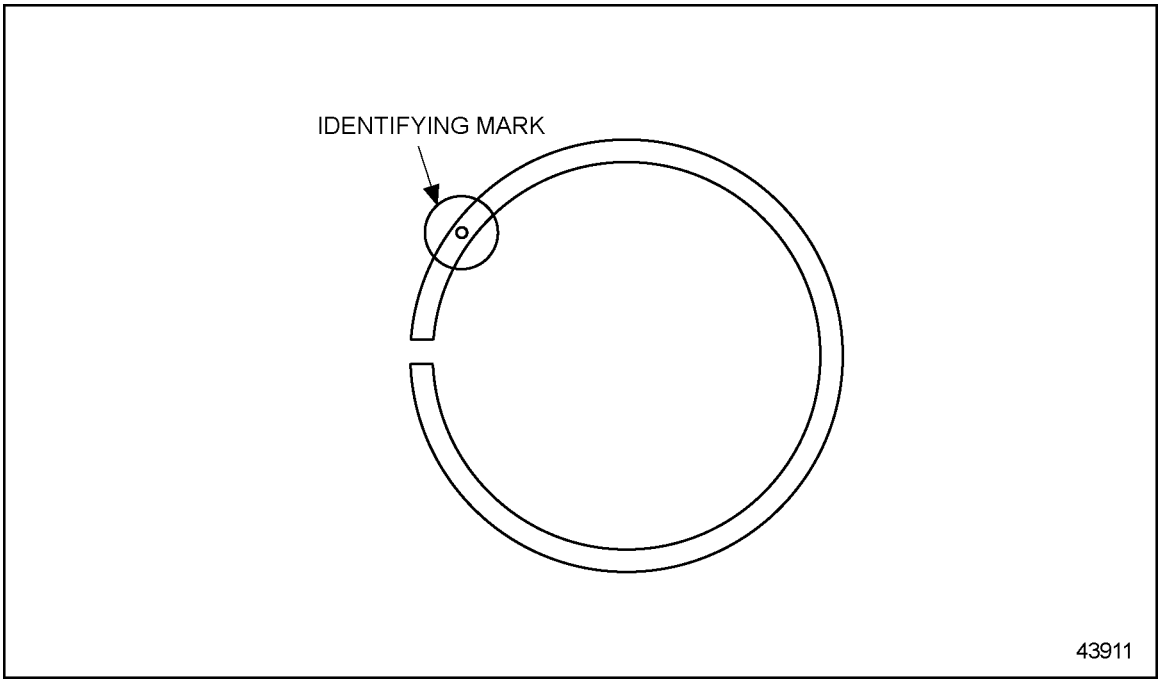

Figure 1-278 Fire and Compression Ring Identification

A one-piece oil control ring is used in the third groove. The expander is of Spira-Lox construction.

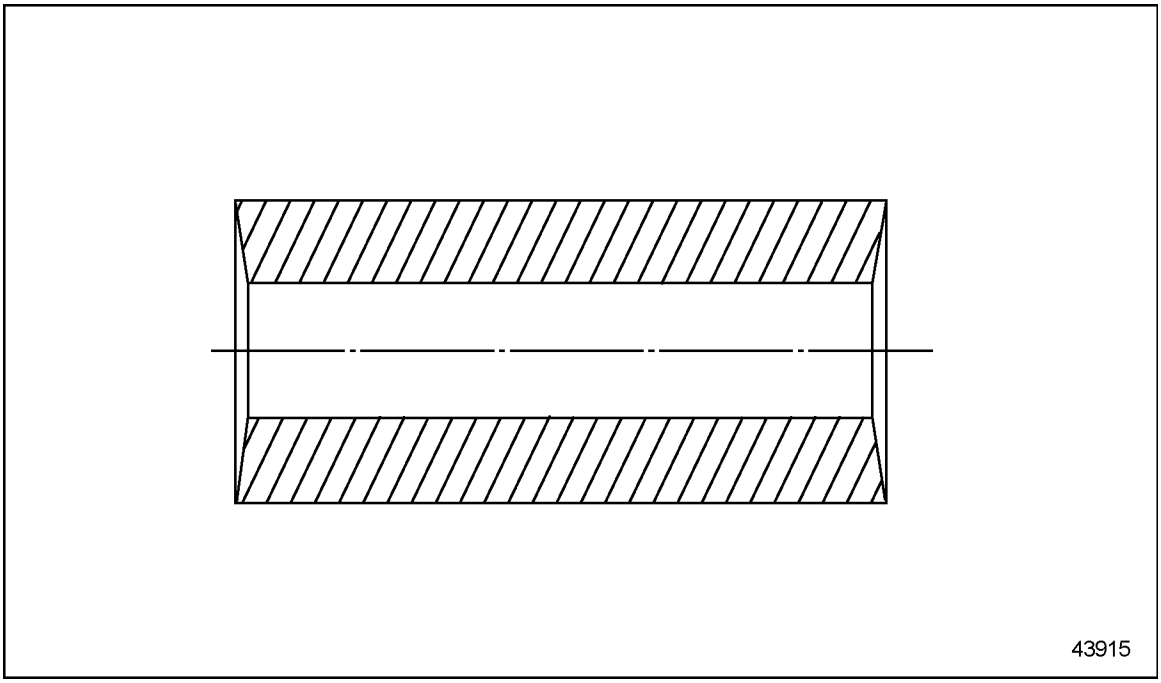

Figure 1-279 Solid Core Piston Pin Cross Section

(Rev. 2004) *All information subject to change without notice.*
6SE483 0401 Copyright © 2004 DETROIT DIESEL CORPORATION

The one piece forged steel piston assembly uses a floating piston pin which rides on the one piece bushing pressed into the end of the connecting rod. The original closed end connecting rod and solid core piston pin do not have drilled center orifices for lubrication. Oil for lubrication and steel piston cooling is supplied by oil spray from piston cooling nozzles at the bottom of each piston bore. For model year 2000 engines, an oil passage was incorporated into the connecting rod design to improve lubrication to the piston pin.

 Copyright © 2004 DETROIT DIESEL CORPORATION

1.18.1 Repair or Replacement of Piston and Piston Ring

To determine if repair is possible or replacement is necessary, perform the following procedure. See Figure 1-280.

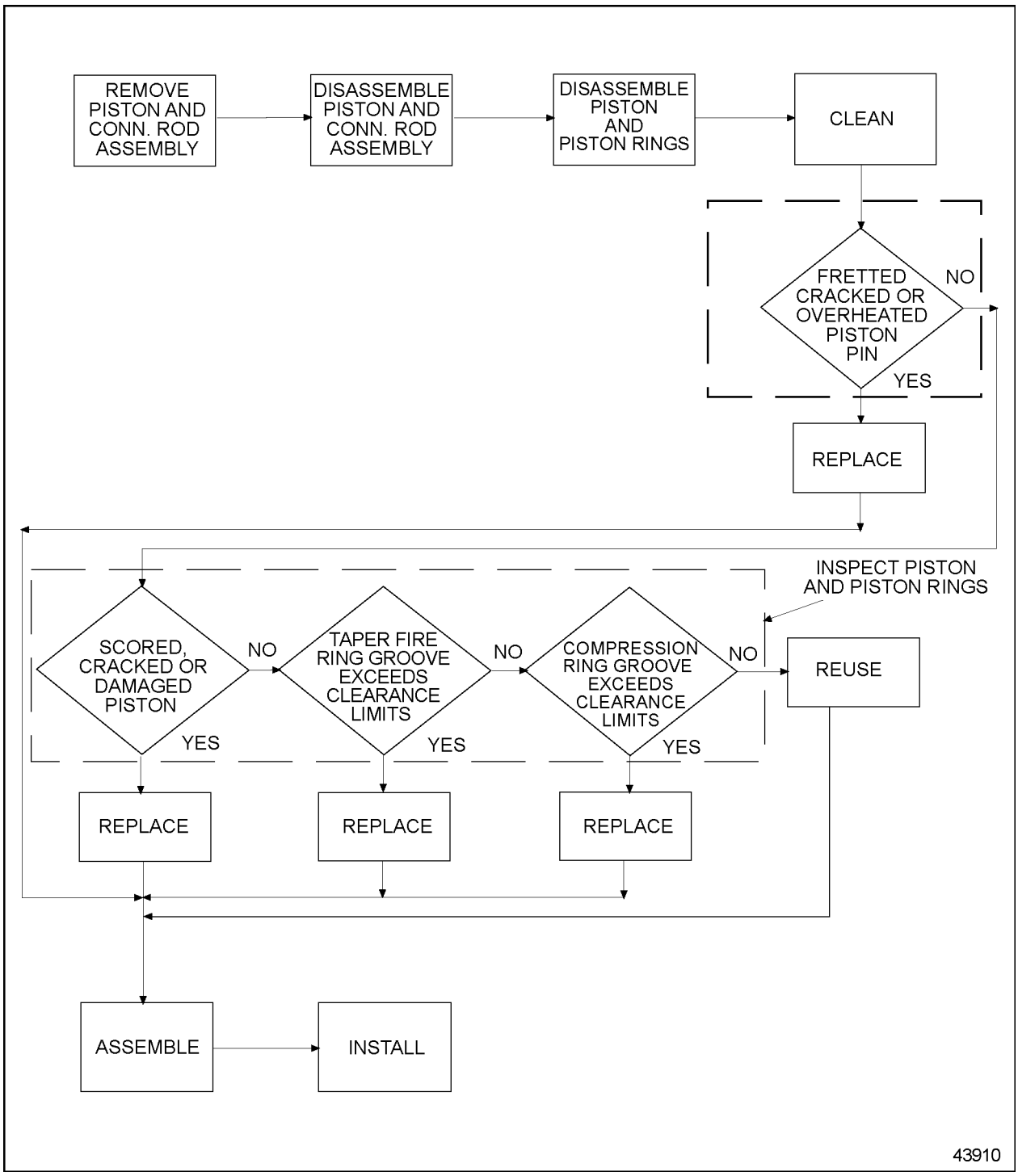

Figure 1-280 Flowchart for Repair or Replacement of Piston and Piston Rings

(Rev. 2004) *All information subject to change without notice.*
6SE483 0401 Copyright © 2004 DETROIT DIESEL CORPORATION

1.18.2 Removal and Cleaning of Piston Assembly and Piston Ring

Refer to section 1.19.2 for piston and connecting rod assembly removal procedure.

1.18.3 Disassembly of Piston Assembly and Piston Ring

Disassemble the piston and piston rings as follows:

1. Remove the piston rings with tool J 8128. See Figure 1-281.

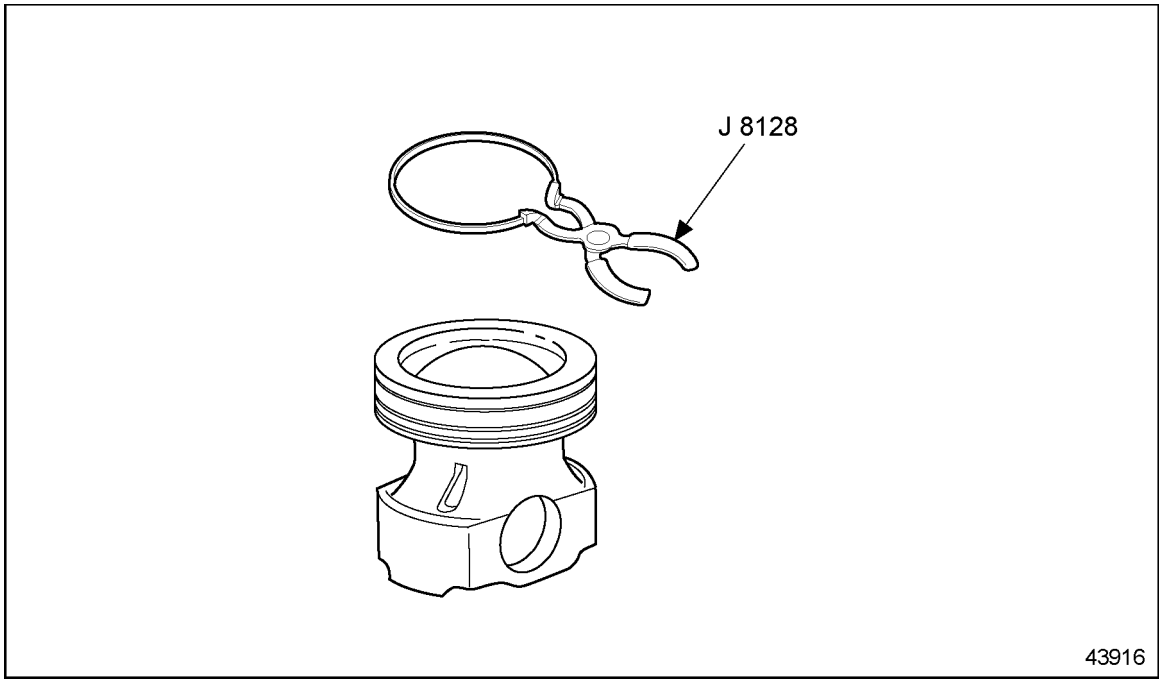

Figure 1-281 Removal of Piston Rings

2. Remove oil control ring expander from oil control ring.

NOTICE:
The pin and piston assembly must be match-marked to assure proper position and orientation.

3. Withdraw the piston pin and mark the front of the piston assembly with a paint pencil, so it can be returned to the correct cylinder location.

NOTE:
The forged steel one piece piston assembly require the removal of the retainer before withdrawing the piston pin.

 Copyright © 2004 DETROIT DIESEL CORPORATION

1.18.3.1 Inspection of Piston Assembly and Piston Rings

Clean the piston assembly and piston rings prior to inspection as follows:

NOTICE:

Do not attempt to clean the one piece forged steel piston by glass beading. Glass beading will remove the surface treatment. Do not refinish or polish the piston pin.

1. Clean the piston components with fuel oil.

CAUTION:

To avoid injury from flying debris when using compressed air, wear adequate eye protection (face shield or safety goggles) and do not exceed 40 psi (276 kPa) air pressure.

2. Dry the piston components with compressed air.
3. If fuel oil does not remove the carbon deposits, use a chemical solvent that will not harm the coating on the piston assembly. However if a chemical solvent is to be used for the cleaning of the piston, remove the rings, some solvents can damage the top ring coating material.

NOTICE

Do not glass bead the pin bushing or pin bore.

4. The piston assembly, including the compression ring grooves, is not tin-plated and may be wire-brushed to remove any hard carbon.
5. Clean the ring grooves with a suitable tool or a piece of an old compression ring that has been ground to a bevel edge.
6. Clean the inside surfaces of the piston dome and the oil relief channels in the oil ring grooves.

Inspect the piston assembly and piston rings as follows:

1. Inspect the piston assembly.
   [a] Check the piston assembly for score marks, cracks, damaged ring grooves or overheating indications.
   [b] If any of these indications are present, replace the piston assembly.

NOTE:
Burn spots may indicate an obstruction in the connecting rod oil passage.

2. Inspect the piston pin.

(Rev. 2004) *All information subject to change without notice.*
6SE483 0401 Copyright © 2004 DETROIT DIESEL CORPORATION

[a] Check the piston pin for fretting, cracking or signs of overheating.

[b] If these are detected, replace piston pin.

[c] Measure piston pin outside diameter. Specifications are listed in Table 1-22.

[d] If the articulated steel piston pin is out of specification, replace with new part.

NOTICE:
If the piston pin used on forged steel one piece piston assemblies is replaced for any reason, the piston assembly must also be replaced.

3. Inspect the bushingless piston pin bore as follows.

   [a] Check the bushingless pin bores for scoring, pitting, flaking, cracking, excessive wear or signs of overheating.

   [b] If these conditions are present the piston assembly must be replaced.

4. Inspect the edges of the piston assembly pin bore.

   [a] Check edges of the piston assembly pin bore for dents and dings.

   [b] If any are found it is acceptable to remove burrs at the pin bore edges by careful filing.

5. Inspect the connecting rod bushing.

   [a] Check the bushing for excessive fretting.

   [b] If excessive fretting is evident, replace the connecting rod assembly.

NOTE:
Remove any dirt or debris on the back of the piston pin bore that may take up clearance required for piston pin installation.

6. If the piston pin used with a forged steel piston is replaced for any reason, the connecting rod bushing must be inspected for wear before the rod is installed. If the bushing is worn beyond limits, the connecting rod must be replaced. Specifications are listed in Table 1-23.

7. Check the cylinder liner for excessive out-of-round and high spots which could cause failure of the piston. Specifications are listed in Table 1-18.

8. Check the block bore for excessive out-of-round, taper, and high spots that could cause failure of the piston. Specifications are listed in Table 1-17.

 Copyright © 2004 DETROIT DIESEL CORPORATION

1.18.4 Assembly of Forged Steel Piston Assembly and Piston Rings

Prior to installing the piston rings, the ring gap of each piston ring must be measured.

1. Insert the piston rings inside of the cylinder liner one at a time, using a piston dome (inserted upside down into the liner) to push the ring down. The piston dome should be inserted into the liner, to the same depth as the ring being positioned.
2. For the oil control ring, insert the piston dome down into the liner, until the oil control ring land is just into the liner. This will ensure that the rings are parallel with the top of the liner, and that they are positioned in the liner within the normal area of ring travel.
3. After the three rings have been positioned in the liner, measure the ring gap of the top ring with a feeler gage. See Figure 1-282. Remove the ring from the liner after the measurement is complete.

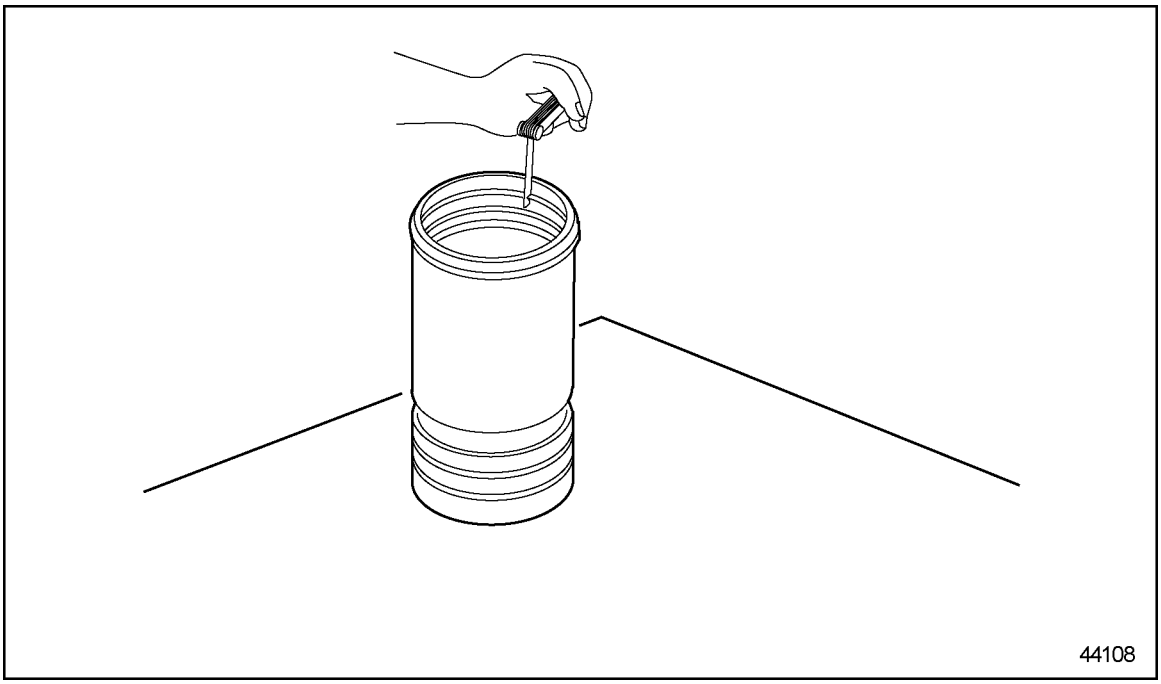

Figure 1-282 Piston Ring Gap Measurement

(Rev. 2004) *All information subject to change without notice.*
6SE483 0401 Copyright © 2004 DETROIT DIESEL CORPORATION

4. Repeat this procedure for each ring, and record your measurements. Allowable ring end gaps are listed in Table 1-7 and listed in Table 1-8

Ring	Ring End Gap
Fire Ring (2.5 mm [0.098 in.] chrome)	0.50 - 0.85 mm (0.020 - 0.033 in.)
Fire Ring (3.0 mm [0.118 in.] HVOF)	0.55 - 0.85 mm (0.022 - 0.033 in.)
Fire Ring (3.5 mm [0.138 in.] plasma)	0.50 - 0.85 mm (0.020 - 0.033 in.)
Compression Ring	0.80 - 1.15 mm (0.031 - 0.045 in.)
Oil Control Ring	0.40 - 0.65 mm (0.016 - 0.026 in.)
14L Fire Ring: (3.0 mm [0.118 in.] chrome)	0.60 - 0.86 mm (0.024 - 0.034 in.)
14L Fire Ring: (3.0 mm [0.118 in.] HVOF)	0.55 - 0.85 mm (0.022 - 0.033 in.)
14L Compression Ring	0.63 - 0.98 mm (0.025 - 0.039 in.)
14L Oil Control Ring	0.21 - 0.51 mm (0.008 - 0.020 in.)

Table 1-7 Allowable Ring End Gap — All Diesel (Except Pleasure Craft Marine) Engines

Ring	Ring End Gap
12.7L Fire Ring: 3.0 mm (0.118 in.)	0.60 - 0.80 mm (0.024 - 0.031 in.)
Compression Ring	0.80 - 1.15 mm (0.031 - 0.045 in.)
Oil Control Ring	0.40 - 0.81 mm (0.016 - 0.032 in.)

Table 1-8 Allowable Ring End Gap — Pleasure Craft Marine Engine

5. Refer to section 1.17.5 for assembly of rings for diesel engines.

 Copyright © 2004 DETROIT DIESEL CORPORATION

1.18.5 Assembly of S60 Diesel Piston Rings

Assemble the piston rings as follows:

1. Install the ring expander in the oil control ring groove in the piston. See Figure 1-283.

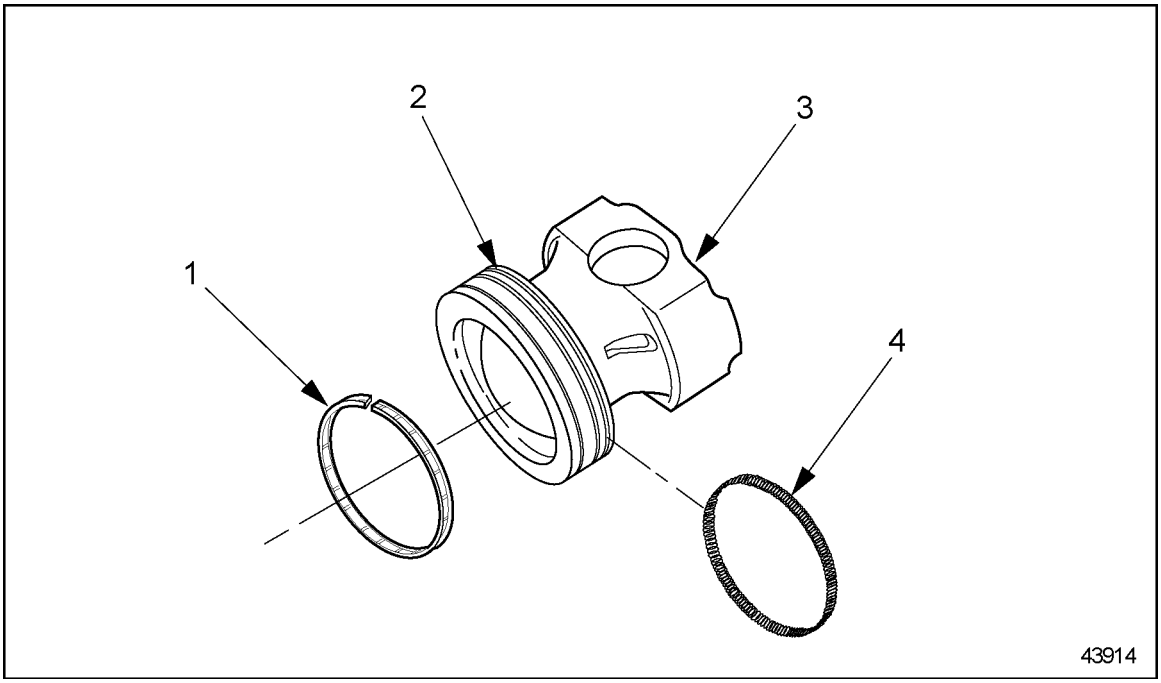

1. Oil Control Ring
2. Oil Control Ring Groove
3. Piston Assembly
4. Oil Control Ring Expander

Figure 1-283 Forged Steel Piston Assembly Installation

(Rev. 2004) *All information subject to change without notice.*
6SE483 0401 Copyright © 2004 DETROIT DIESEL CORPORATION

2. Install the oil control ring by hand. See Figure 1-271.

NOTE:
The oil control ring may be installed in either direction.

NOTE:
Install expander into inside diameter groove of ring with expander spring gap located 180° from the oil control ring gap.

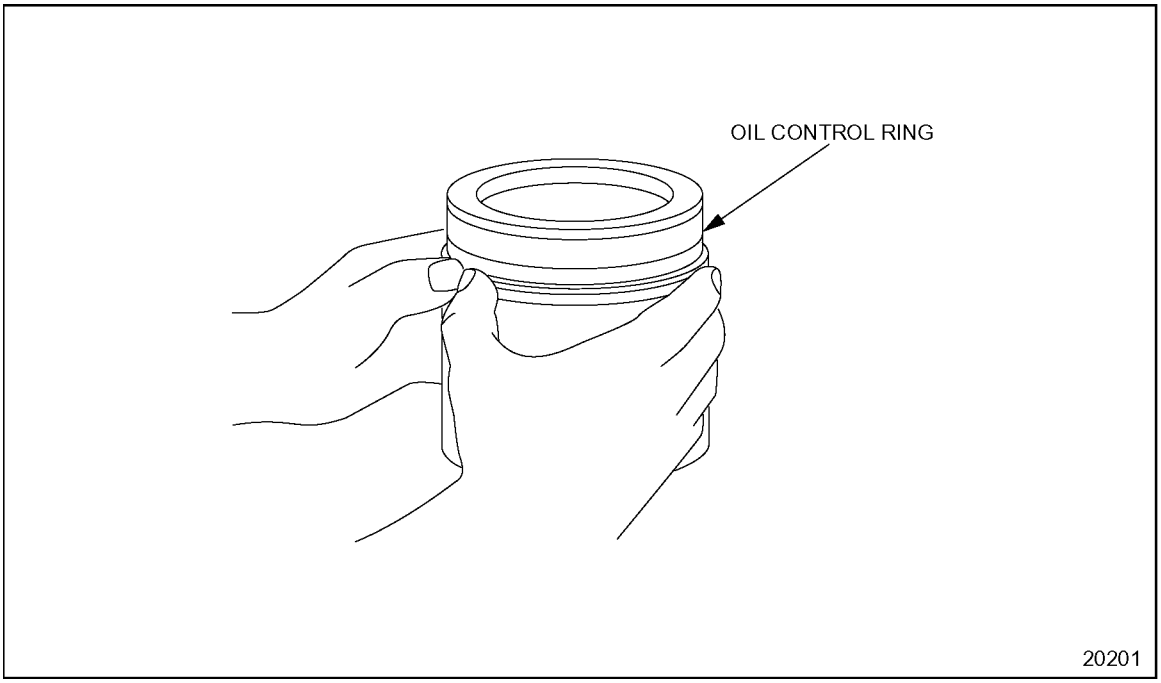

Figure 1-284 Oil Control Ring Installation (Diesel)

NOTE:
The oil control ring expander has a identifying paint stripe. Make sure the paint mark can be seen after the oil control ring is installed at ring gap.

 Copyright © 2004 DETROIT DIESEL CORPORATION

Install the fire and compression rings as follows:

NOTICE:
To avoid breaking or overstressing the rings, do not spread them any more than necessary to slip them over the piston dome.

1. Starting with the compression ring (second groove), install the compression ring and fire ring with tool J 8128. See Figure 1-285. Make sure the identifying dimple on the rings is installed up, toward the dome of the piston. See Figure 1-278 for ring identification and locations.
2. Stagger the ring gaps around the piston. see Figure 1-285.

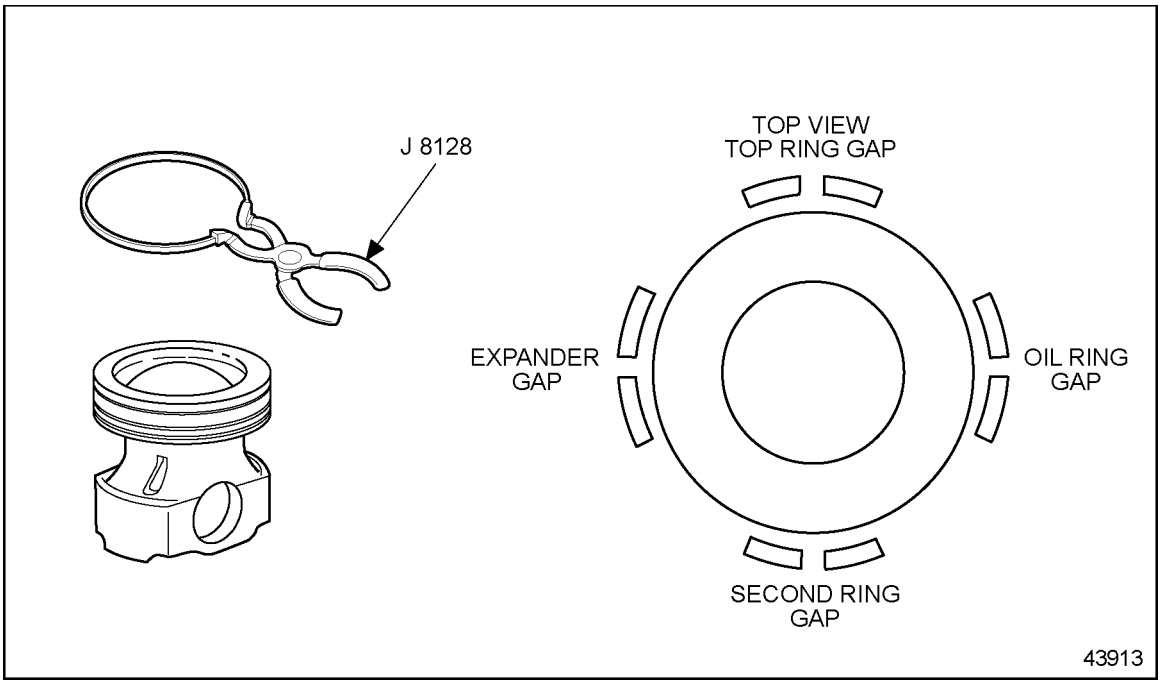

Figure 1-285 Forged Steel Piston Ring Positioning (Diesel)

3. Refer to section 1.19.4 for piston and connecting rod assembly procedure.

(Rev. 2004) *All information subject to change without notice.*
6SE483 0401 Copyright © 2004 DETROIT DIESEL CORPORATION

 Copyright © 2004 DETROIT DIESEL CORPORATION

1.19 PISTON AND CONNECTING ROD ASSEMBLY

Since the piston and connecting rod assembly is one unit made of two separate components, the components will be addressed in separate sections.

For general piston information, refer to section 1.17.

For general connecting rod assembly information, refer to section 1.20. The 14L and 12.7L On-Highway engines built after December 1, 2003 requires that the piston, connecting rod, and cylinder liner be removed as an assembly.

NOTE:
Some 14L and steel cylinder kit procedures differ from the cast iron procedures. Information regarding 14L and steel cylinder kits will follow cast iron procedures when different.

(Rev. 2004) *All information subject to change without notice.*
6SE483 0401 Copyright © 2004 DETROIT DIESEL CORPORATION

1.19.1 Repair or Replacement of Piston and Connecting Rod

To determine if repair is possible or replacement is necessary, perform the following procedure. See Figure 1-286.

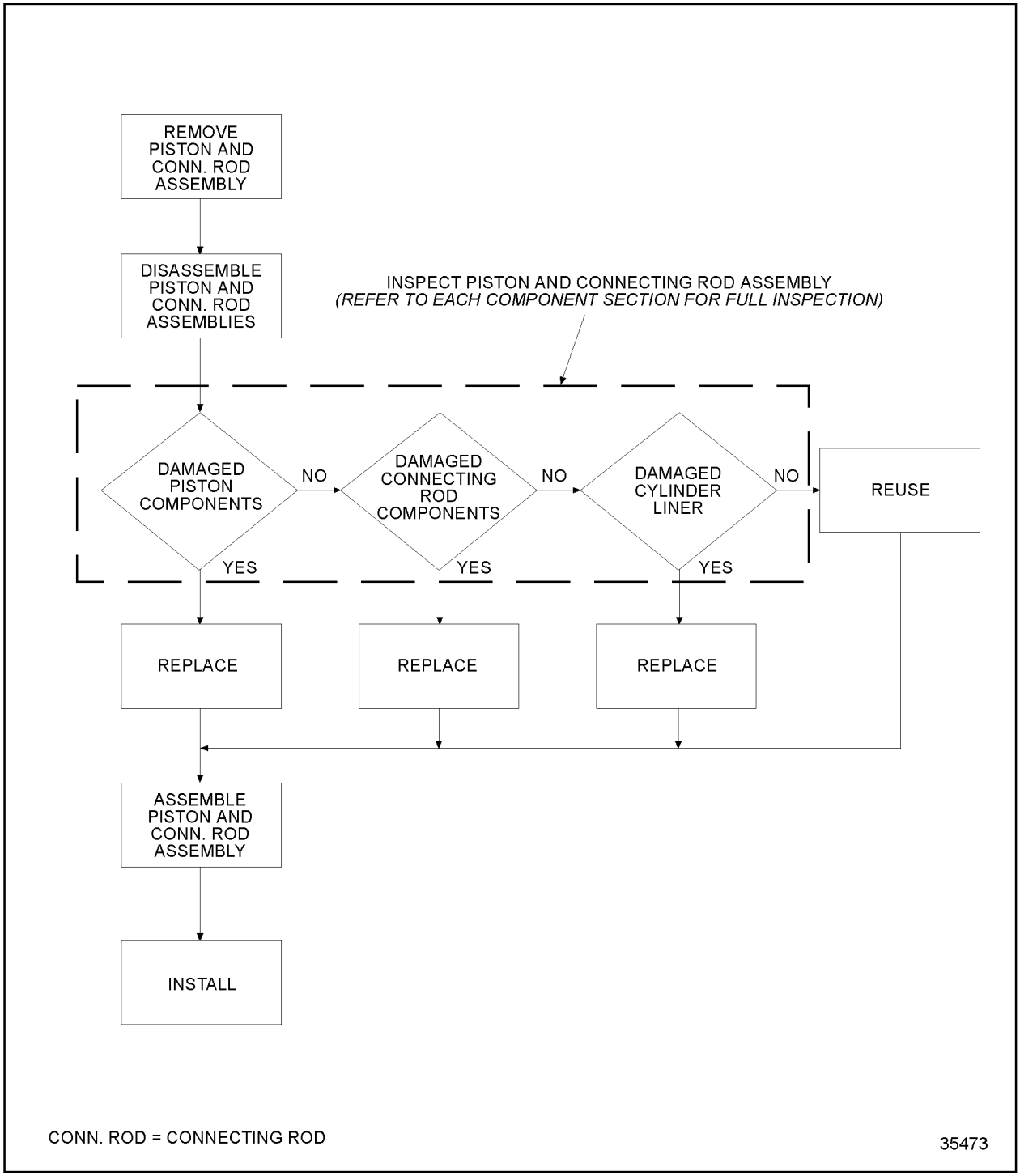

Figure 1-286 Flowchart for Repair or Replacement of Piston and Connecting Rod

 Copyright © 2004 DETROIT DIESEL CORPORATION

1.19.2 Removal and Cleaning of Piston and Connecting Rod

Precleaning is not necessary.

Remove the piston and connecting rod assembly as follows (except 14L and 12.7 EGR On-Highway engines):

1. Drain the engine cooling system. Refer to section 13.13.4.
2. Drain the engine oil. Refer to section 13.13.1.
3. Remove the oil pan. Refer to section 3.11.2.
4. For pre-1991 engines, disconnect and remove the lubricating oil pump inlet pipe and screen assembly, oil pump outlet pipe and lubricating oil pump. Refer to section 3.2.2. See Figure 1-287.

NOTE:
It is not necessary to remove the oil pump on 1991 and later model year engines.

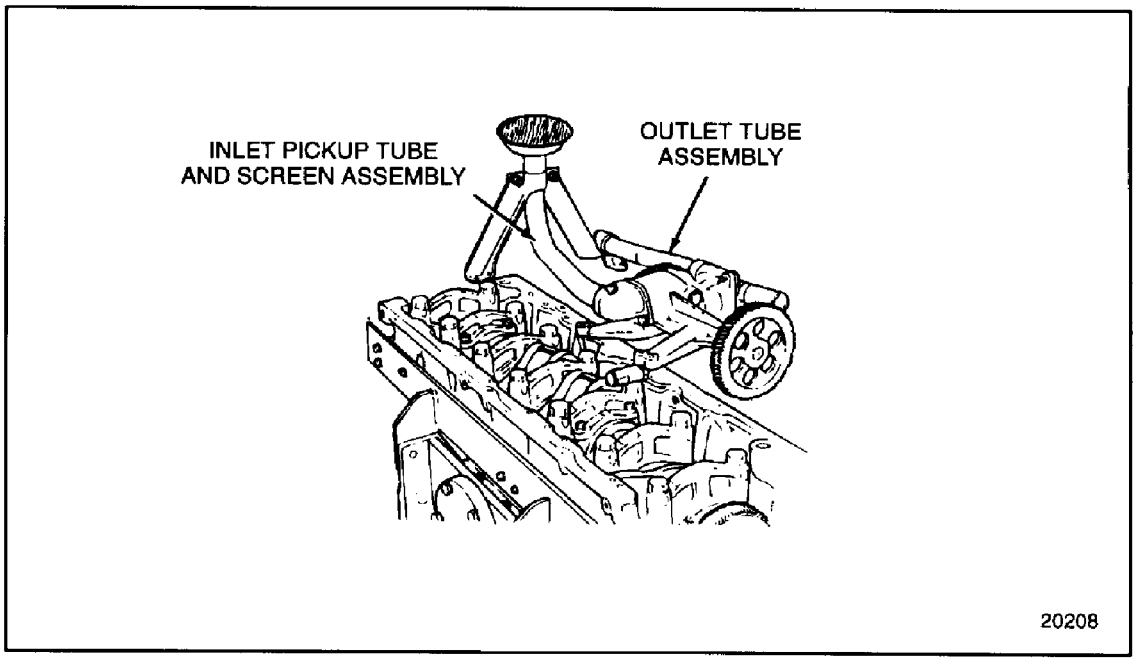

Figure 1-287 Oil Pump Removal (Pre-1991 Engines)

(Rev. 2004) *All information subject to change without notice.*
6SE483 0401 Copyright © 2004 DETROIT DIESEL CORPORATION

5. Remove the cylinder head. Refer to section 1.2.2.
6. Use an emery cloth to remove any carbon deposits from the upper surface of the cylinder liner.

NOTICE:
If installed, remove the piston cooling nozzles from the base of the cylinder bores to prevent nozzle damage, during piston removal.

7. Remove the bearing cap and lower bearing shell from the connecting rod.
8. Install connecting rod guides, J 35945 (or equivalent) for removing cast iron pistons or J 43661(or equivalent) for removing forged steel pistons, to protect the crankshaft journals.
9. Push the piston and rod assembly out through the top of the cylinder block.

NOTE:
The piston cannot be removed from the bottom of the cylinder block.

 Copyright © 2004 DETROIT DIESEL CORPORATION

10. Assemble the bearing cap and lower bearing shell to the connecting rod after removal. If not already marked, match-mark the rod and cap (on the tang side) with the cylinder number from where they were removed. See Figure 1-288.

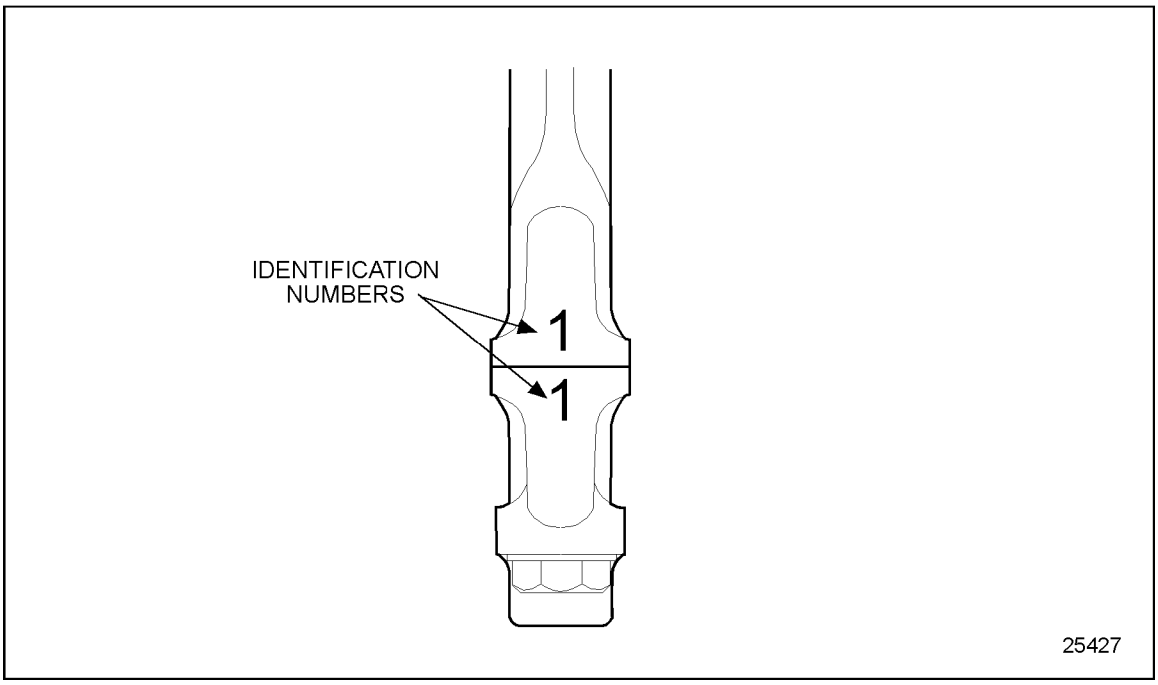

Figure 1-288 Connecting Rod and Cap Identification

NOTE:
When removed, the bearing cap and the bearing shell must be reinstalled on the original connecting rod before another connecting rod bearing cap is removed.

NOTE:
If removing the piston and connecting rod assembly to work on the cylinder liner, stop here. Refer to section 1.21.2 for cylinder liner removal procedure.

(Rev. 2004) *All information subject to change without notice.*
6SE483 0401 Copyright © 2004 DETROIT DIESEL CORPORATION

Remove the 14L and 12.7L EGR On-Highway cylinder liner, piston and connecting rod assembly as follows::

1. Drain the engine cooling system. Refer to section 13.13.4.
2. Drain the engine oil. Refer to section 13.13.1.
3. Remove the oil pan. Refer to section 3.11.2.
4. Remove the cylinder head. Refer to section 1.2.2.
5. Position the crankshaft journal for the cylinder kit assembly to be removed at bottom dead center.
6. Remove the bearing cap.
7. Insert cylinder kit removal tool J 45876 in the bore of the cylinder to be removed. Tighten the bolt snug. (Do not overtighten.). See Figure 1-289.

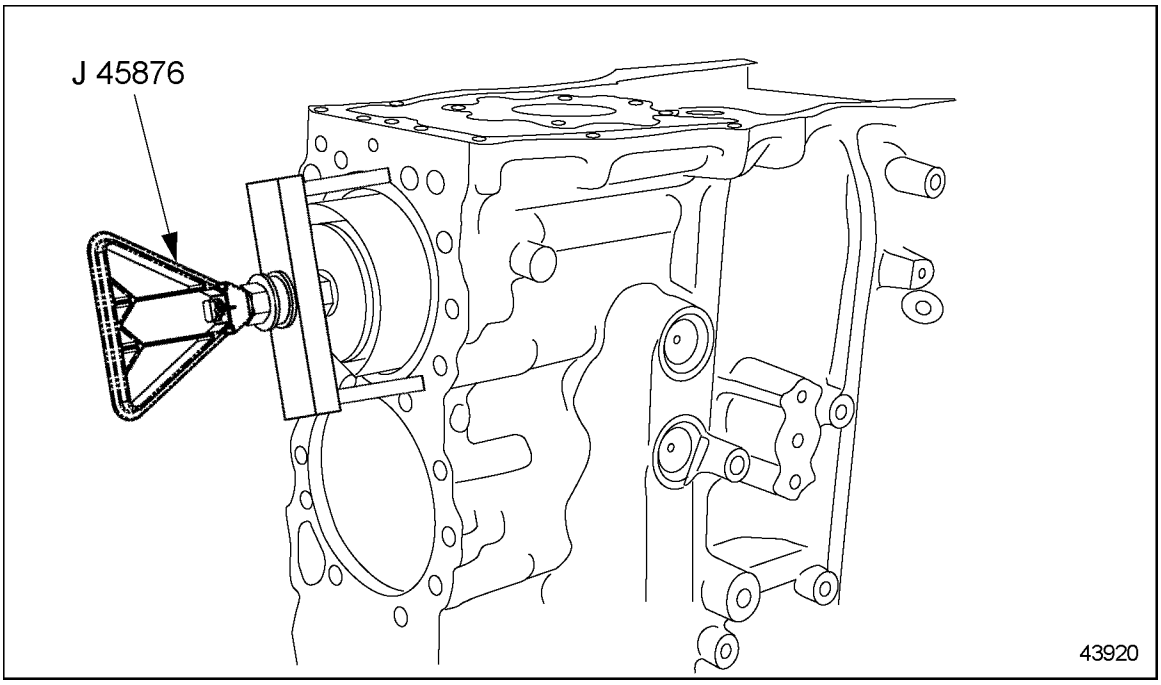

Figure 1-289 Cylinder Kit Removal Tool J 45876

8. Install the oil nozzle protectors, J 34317. Close the air valve in the removal tool.
9. Rotate the engine by hand until the entire cylinder kit assembly is pushed up where the liner can be removed by grabbing the tool to pull the kit completely out of the engine block.

 Copyright © 2004 DETROIT DIESEL CORPORATION

10. Assemble the bearing cap and lower bearing shell to the connecting rod after removal. If not already marked, match-mark the rod and cap (on the tang side) with the cylinder number from where they were removed. See Figure 1-290.

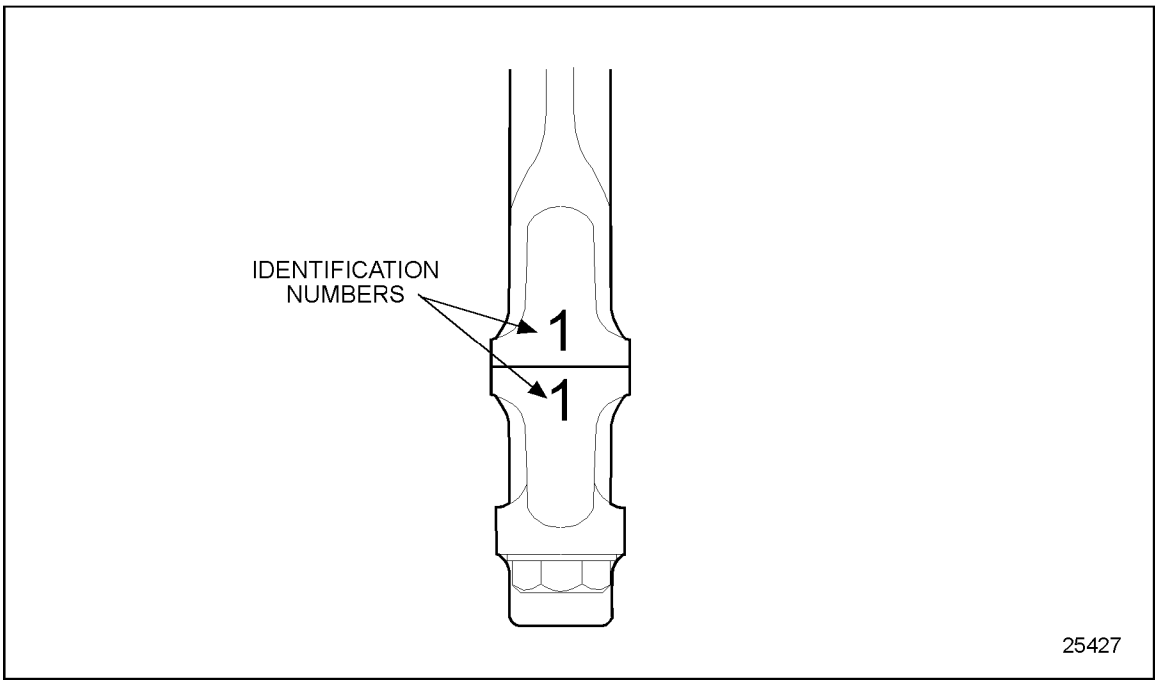

Figure 1-290 Connecting Rod and Cap Identification

NOTE:
When removed, the bearing cap and the bearing shell must be reinstalled on the original connecting rod before another connecting rod bearing cap is removed.

11. Withdraw the piston and rod assembly through the bottom of the cylinder liner.

NOTE:
The rod will not fit through the inside diameter of the cylinder liner.

(Rev. 2004) *All information subject to change without notice.*
6SE483 0401 Copyright © 2004 DETROIT DIESEL CORPORATION

1.19.3 Disassembly of Piston and Connecting Rod Assembly

Piston assembly components should be segregated by cylinder and match-marked during disassembly to ensure they are assembled in the same position and orientation.

NOTICE:
Stamping cylinder numbers on the piston assembly will damage the components.

It is best to use a paint pencil. For cast iron pistons, mark the pin, skirt, bushing, and dome ear at the front. For forged steel pistons, mark the pin, skirt, and dome. For forged steel piston assemblies mark the pin and the dome/skirt assembly.

If the second ring on the cast iron piston is a rectangular section, the engine should be fitted with the current cast iron piston assemblies that contain a Second Keystone Ring (SKR) configuration. Former piston rings must **NOT** be used in the SKR configuration.

Disassemble the cast iron piston and connecting rod assembly as follows:

1. Place the piston, dome down, on the round plate of the piston and connecting rod holding fixture, J 36211. See Figure 1-291.

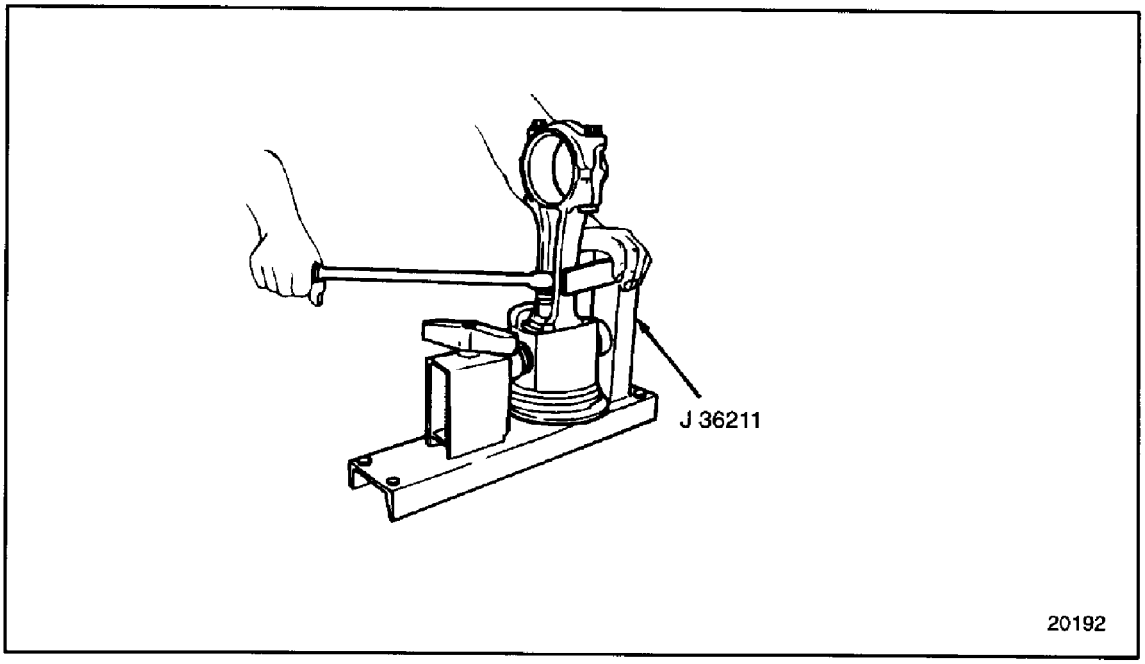

Figure 1-291 Piston Connecting Rod Holding Fixture

2. Slide the movable portion of the fixture until it contacts the piston pin and tighten the handle.

 Copyright © 2004 DETROIT DIESEL CORPORATION

3. Loosen the two bolts that secure the connecting rod to the piston pin and remove the two bolts and spacers.
4. Remove the connecting rod.
5. Remove the piston, pin and skirt from the holding fixture.

Disassemble the 12.7L and 14L forged steel piston and connecting rod assembly as follows:

1. Place the piston, dome down, on the table. See Figure 1-292.

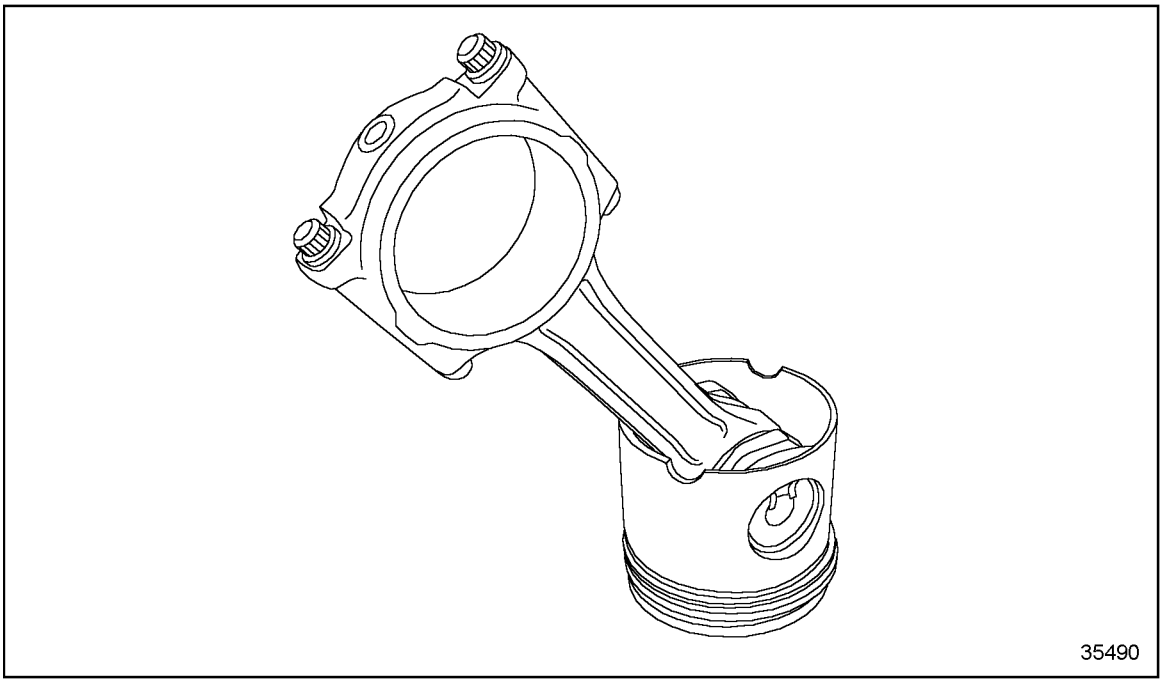

Figure 1-292 Positioning of the Piston and Connecting Rod Assembly

2. Using the required snap ring pliers, remove the circlip-type snap rings from the piston skirt.

NOTE:
For forged steel one piece piston assemblies skip to step 5.

3. Slide out the piston pin and remove the rod from the piston.
4. Disassemble the piston dome from the skirt.
5. Slide out the piston pin and remove the connecting rod from piston assembly.

(Rev. 2004) *All information subject to change without notice.*
6SE483 0401 Copyright © 2004 DETROIT DIESEL CORPORATION

1.19.3.1 Inspection of Piston and Connecting Rod Assembly

Refer to section 1.17.3 for disassembly of the piston and piston ring.

Refer to section 1.17.3.1 for inspection of the piston and piston ring.

Refer to section 1.20.3 for disassembly of the connecting rod.

Refer to section 1.20.3.1 for inspection of the connecting rod.

NOTE:
Steel dome piston pin bearings and bushingless pin bores are not serviced. If they are found damaged then the replacement of the dome is required. The same is true for the rod bearings. If they are found damaged then the replacement of the rod is required as well.

1.19.4 Assembly of Piston and Connecting Rod Assembly

Assemble the cast iron piston and connecting rod assembly as follows:

NOTICE:
The connecting rod-to-piston pin attaching bolts and spacers are specially designed components. No other bolts or spacers may be used. Piston pin bolts are considered one-use items and **must** be replaced with new bolts when removed for any reason. Failure to observe this precaution may result in bolt loosening or breaking during engine operation, which may cause serious engine damage.

1. Discard used piston pin bolts and replace with new bolts.
2. Because of the low clearance fit between the piston pin and three-piece pin bearing, care in handling and cleanliness of piston dome bore, bearings, and piston pin are important. Otherwise, assembly may be impossible. The specifications on reusing piston assembly components are listed in Table 1-19 and listed in Table 1-22.
3. The pin bore and bearing backs should be wiped clean prior to installation of the bushings in the piston dome.
4. Installing piston pin bearings (with the piston dome standing on the rim) requires the upper bearing piece to be inserted through the end of the pin bore and dropped over the retaining pin.
5. The lower bearing pieces are inserted flat side in by tilting the bearing at approximately a 30 degree angle from the vertical away from the dome ear.
6. Set the edge of the bearing parting line on the edge of the upper piece notch and rotate the lower bushing up and into place. The lower bearing can then be pushed full into the bore.
7. Lubricate the piston pin bearings with clean engine oil. (Straight 30 weight oil is recommended.)

 Copyright © 2004 DETROIT DIESEL CORPORATION

8. Set the piston skirt on the piston dome.
9. Align the piston pin holes in the dome and skirt.
10. Check the piston pin for foreign matter in the bolt holes.
11. Lubricate the pin with clean engine oil and install in the bores with the bolt holes facing the connecting rod, away from the dome.

NOTE:
The piston pin may feel considerably tighter than with conventional designs and possibly may not be turned easily by hand. Proper pin and bearing installation should result in a piston assembly in which the pin can be turned with the connecting rod while the piston dome is standing on the rim and the piston skirt is held with the other hand.

12. Apply a small amount of International Compound #2®, or equivalent, to the bolt threads and bolt head contact surfaces and both ends of the spacers.

NOTICE:
The connecting rod-to-piston pin attaching bolts and spacers are specially designed components. No other bolts or spacers may be used. Piston pin bolts are considered one-time use items and must be replaced with new bolts when removed for any reason. Failure to observe this precaution may result in bolt loosening or breakage during engine operation, which may cause serious engine damage.

13. Install the spacers on the two special connecting rod-to-piston attaching bolts.
14. After clamping the connecting rod in holding fixture, J 36211, torque each piston pin bolt to 95-122 N·m (70-90 lb·ft). See Figure 1-291.
15. Complete the process by tightening the bolts to 150.2–163.8 N·m (110–120 lb·ft) final torque.

(Rev. 2004) *All information subject to change without notice.*
6SE483 0401 Copyright © 2004 DETROIT DIESEL CORPORATION

Assemble the steel piston and connecting rod assembly as follows:

1. Position the piston dome on it's rim. See Figure 1-293.

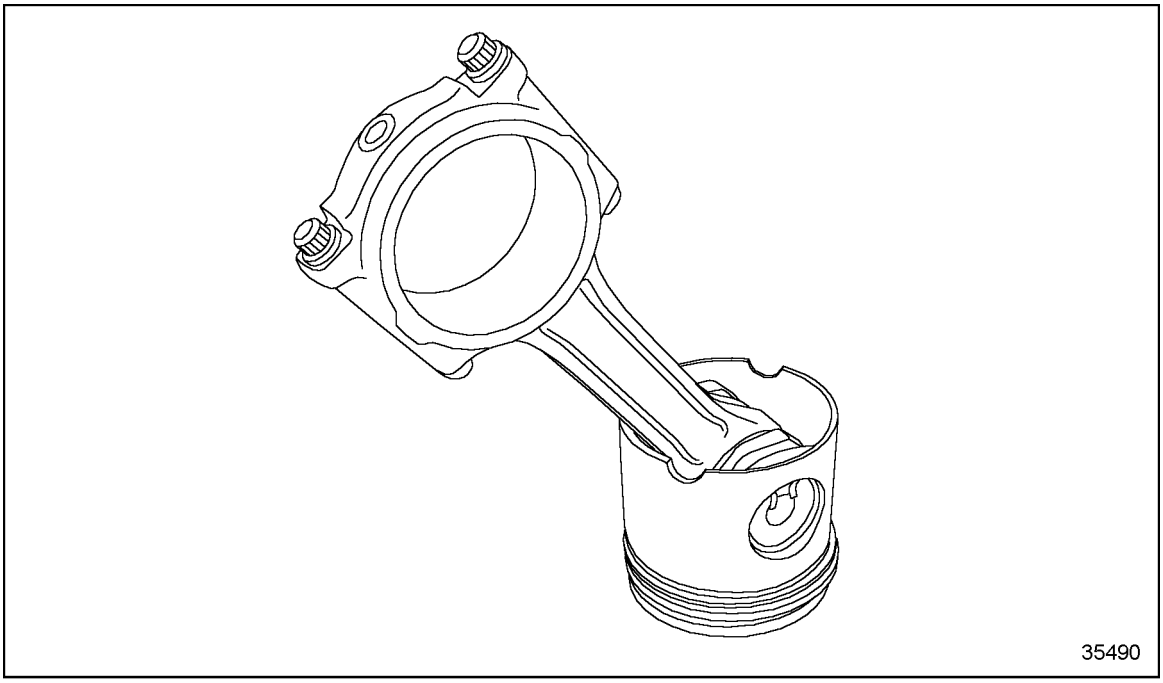

Figure 1-293 Positioning of Piston Dome

NOTE:
If piston is a one piece forged steel piston assembly proceed to step 5.

2. Set the piston skirt on the piston dome.
3. Place the piston skirt on the piston dome with the notches facing away from the dome.
4. Align the piston pin bores of the dome and skirt.
5. Liberally lubricate the piston pin bearings or brushingless pin bore in the dome and connecting rod bearing with clean engine oil.
6. Using the required snap ring pliers, install one of the circlip-type snap rings into the recess in the piston skirt. Orient the snap ring gap to either the 12 o'clock or 6 o'clock position.
7. Lubricate the pin with clean engine oil.
8. Position the end of the connecting rod inside the piston dome.

 Copyright © 2004 DETROIT DIESEL CORPORATION

NOTICE:
Do not mix piston pins in an engine. Failure to install the same piston pins in an engine may result in an unbalance condition indicated by severe vibration. Excessive vibration will have a detrimental effect on engine life. To avoid this situation, always check the part number on the end of the existing piston pin or measure the piston pin I.D. before installing the new pin.

9. ***Piston pins must not be mixed in an engine.*** Install piston pin into the pin bores through rod until it rests against the previously installed snap ring.
10. Using the required snap ring pliers, install the other circlip-type snap ring into the recess in the piston skirt to lock the pin in place. Orient the snap ring gap to either the 12 o'clock or 6 o'clock position.

(Rev. 2004) *All information subject to change without notice.*
6SE483 0401 Copyright © 2004 DETROIT DIESEL CORPORATION

1.19.5 Installation of Piston and Connecting Rod Assembly

To install the piston and connecting rod assembly to the engine (except 14L and 12.7 L), perform the following:

1. If the rings have been removed, install them onto the dome, refer to section 1.17.4. If the piston rings are installed, proceed to step 2.
2. Add clean engine oil to a clean pan at least 305 mm (12 in.) in diameter, until the level reaches approximately 76 mm (3 in.).
3. Place the piston and connecting rod assembly into pan, with the dome of the piston on the bottom of the pan. See Figure 1-294.
4. Coat the piston liberally with the engine oil, saturating the piston rings and lands.

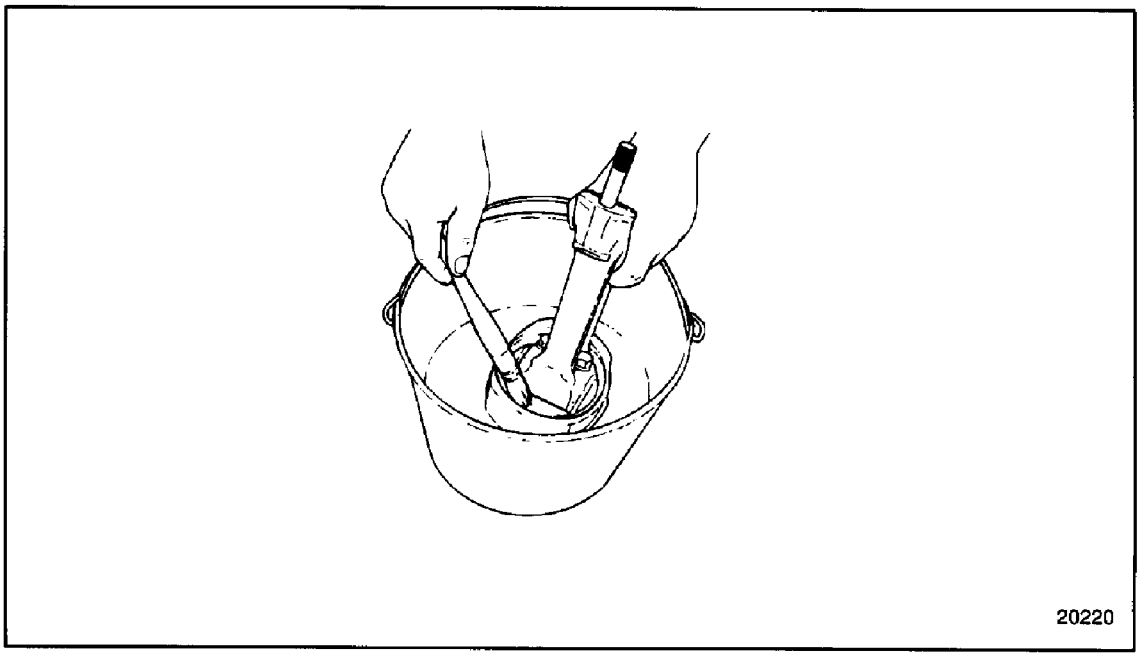

Figure 1-294 Piston and Connecting Rod Assembly Lubrication

 Copyright © 2004 DETROIT DIESEL CORPORATION

5. Position (stagger) the piston ring gaps properly on the piston at 90 degree intervals. See Figure 1-295 for diesel engines and see Figure 1-296 for natural gas engines.

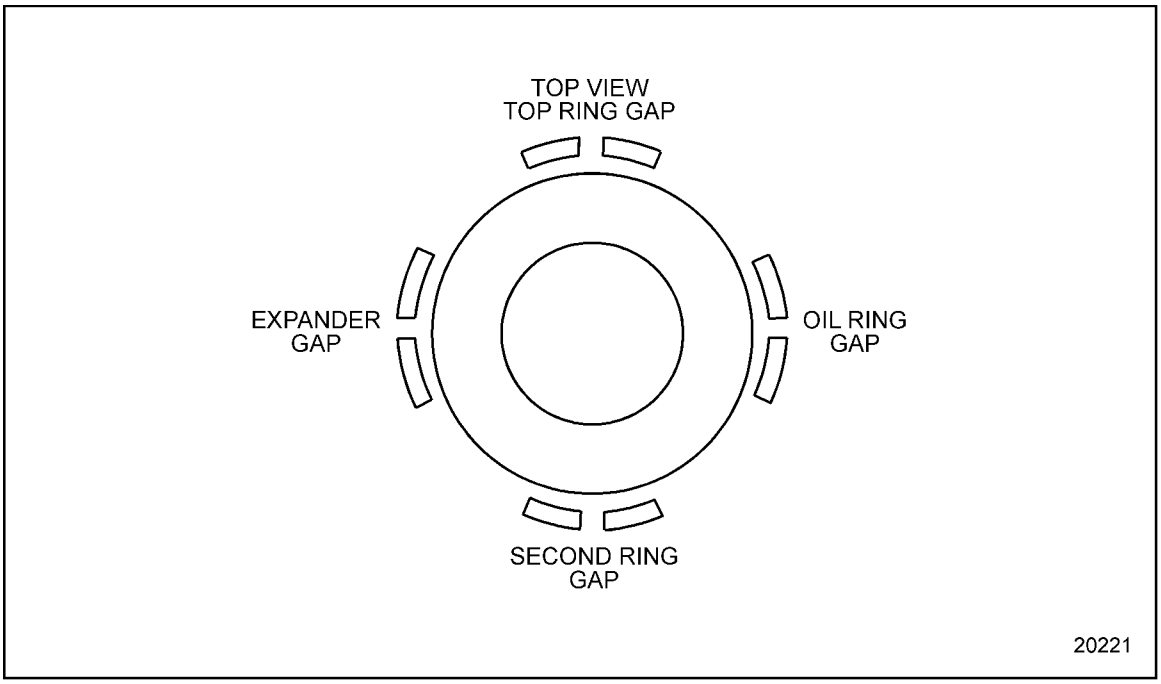

Figure 1-295 Piston Ring Positioning (Diesel)

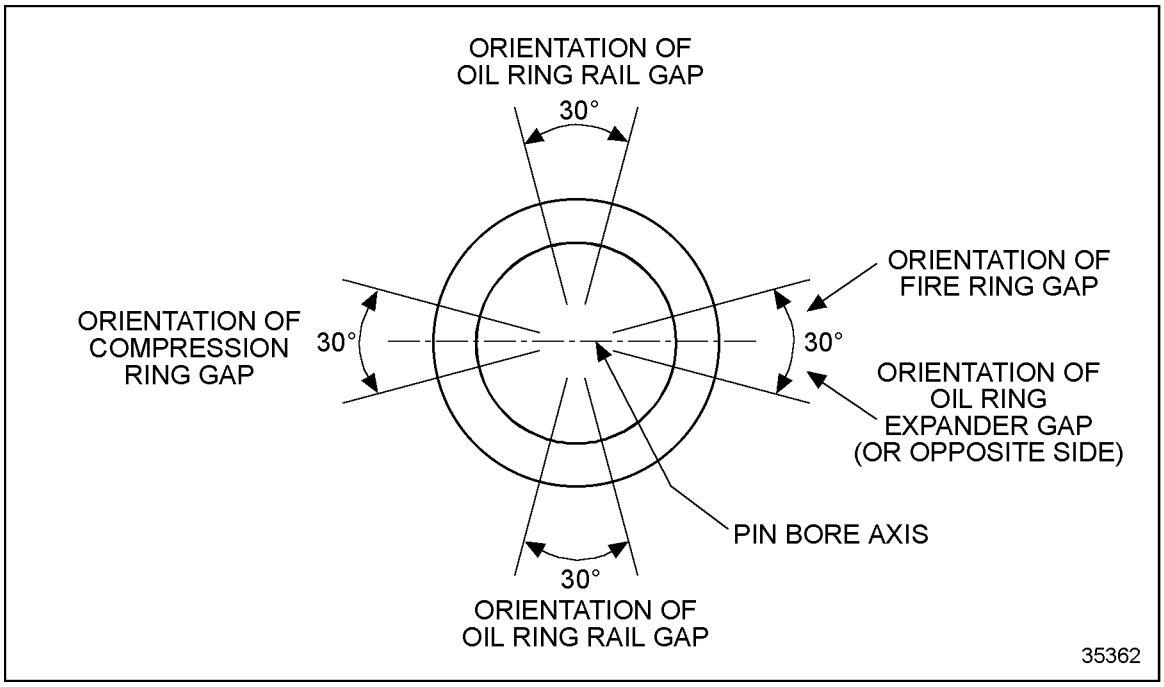

Figure 1-296 Piston Ring Positioning (Natural Gas)

(Rev. 2004) *All information subject to change without notice.*
6SE483 0401 Copyright © 2004 DETROIT DIESEL CORPORATION

6. Place the piston, dome down, in the bottom of the pan. Center the dome of the piston within the pan.
7. Coat the inside diameter of the ring compression tool, J 35598–A, liberally with clean engine oil from the pan.

NOTICE:
Inspect the piston ring compressor for nicks or burrs, especially at the non-tapered inside diameter end. Nicks or burrs on the inside diameter of the ring compressor may result in damage to the piston rings.

8. Install the tapered end of the piston ring compression tool over the end of the connecting rod, and down onto the piston. As the compression tool slides down the piston to the piston ring area, apply slow, even pressure on both sides of the compression tool to compress the rings. See Figure 1-297.

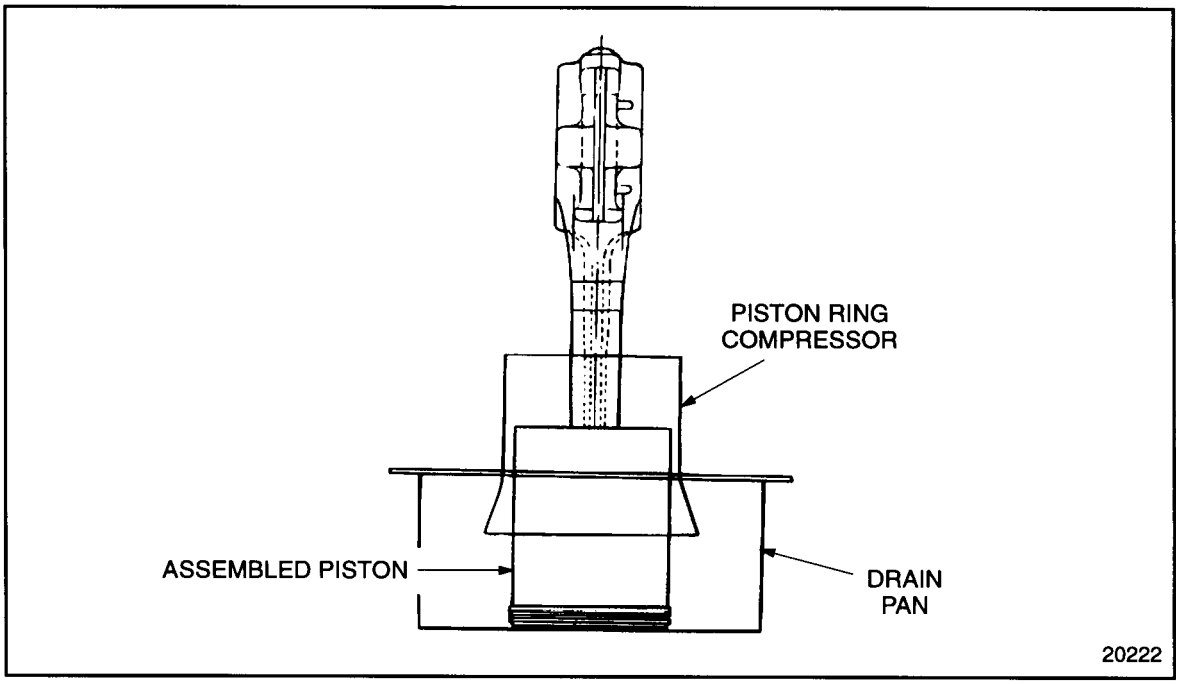

Figure 1-297 Installing Piston and Connecting Rod Assembly into Ring Compressor

9. Slide the compression tool down until it contacts the bottom of the drain pan.
10. Position the crankshaft so that the connecting rod journal for the cylinder being worked on is at bottom-dead-center.
11. Remove the cap from the connecting rod.

 Copyright © 2004 DETROIT DIESEL CORPORATION

NOTICE:

Do not allow the connecting rod to contact the cylinder liner on installation, or damage to the liner may occur. The numbers on the side of the connecting rod and cap identify the rod with the cap and indicate the particular cylinder in which they are used. If a new service connecting rod is to be installed, the same identification numbers must be stamped in the same location (on the tang side of the rod and cap) as on the connecting rod that was replaced.

12. Install connecting rod guide, (J 35945 for cast iron piston or J 43661 for forged steel piston) over the ends of the connecting rod bolts to prevent damaging the crankshaft journals or the joint face of the rod. The guides also prevent the connecting rod from contacting the liner and damaging the surface. See Figure 1-298.

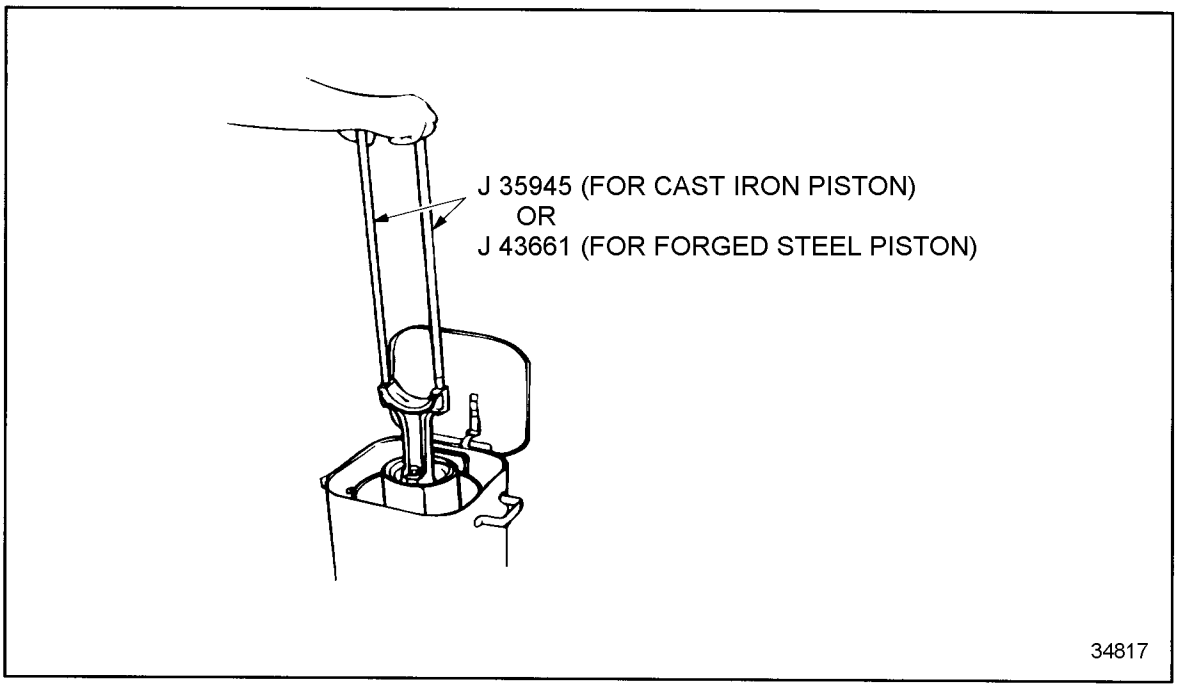

Figure 1-298 Connecting Rod Guides Installation

NOTE:
The connecting rod guides are threaded at the upper end and attach to the rod bolts.

(Rev. 2004) *All information subject to change without notice.*
6SE483 0401 Copyright © 2004 DETROIT DIESEL CORPORATION

NOTICE:
Do not lift the assembly using the connecting rod guides. The assembly could dislodge from the connecting rod guides and could cause engine damage.

13. Grasp the connecting rod assembly with one hand, and the piston ring compressor with the other. Lift the assembly out of the pan, and allow excess oil to drain back into the pan.

NOTE:
Do not allow the piston to slide out of the bottom of the ring compressor.

14. With the crankshaft throw in the bottom position, ensure the number on the connecting rod is towards the cooler side of the engine, place the ring compressor and the piston and connecting rod assembly over the cylinder where it is to be installed. See Figure 1-299.

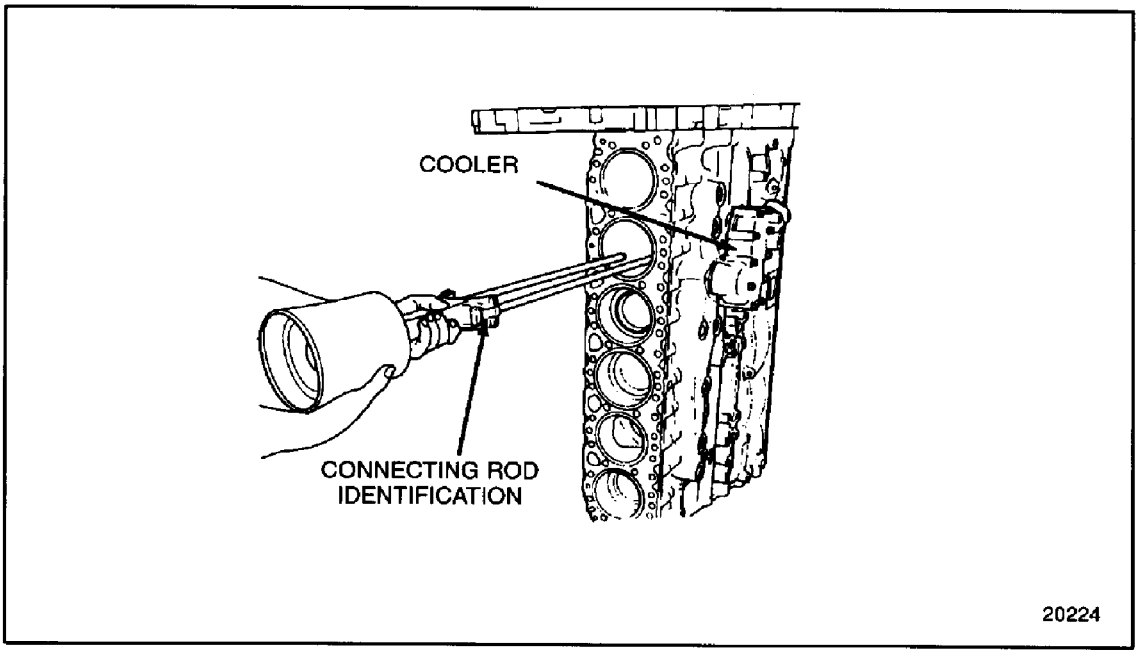

Figure 1-299 Connecting Rod Indexing

NOTE:
There are orientation lugs cast into one side of the upper and lower sections of the connecting rod. These orientation lugs face the front of the engine. See Figure 1-300.

 Copyright © 2004 DETROIT DIESEL CORPORATION

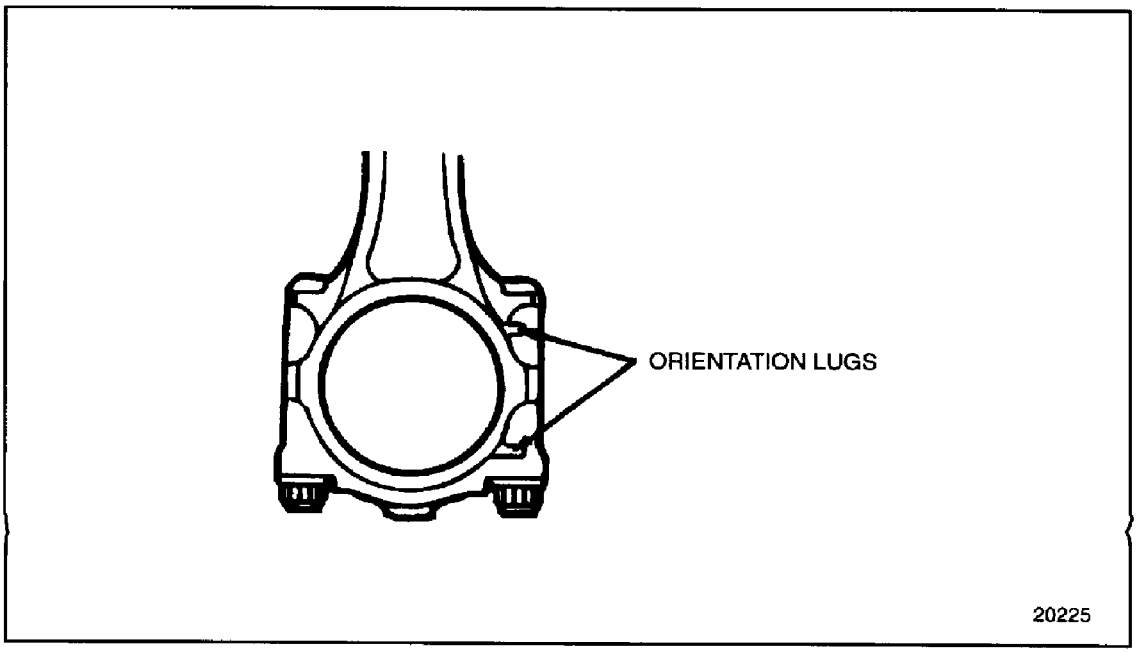

Figure 1-300 Orientation Lugs

(Rev. 2004) *All information subject to change without notice.*
6SE483 0401 Copyright © 2004 DETROIT DIESEL CORPORATION

NOTICE:

When installing a forged steel piston into the engine, care must be taken to avoid damaging the piston cooling nozzle installed at the base of the cylinder bore. Before loading the piston into the liner, turn the connecting rod so that the bearing end is offset approximately 10–15 degrees and not perpendicular to the crankshaft, as is the case with cast iron pistons. This will ensure that the rod end does not strike the nozzle when the piston is pushed in. Once the rod end is past the nozzle, turn the rod so that the bearing end is perpendicular to the crankshaft journal.

NOTICE:

Failure to orient the piston connecting rod properly during forged steel piston installation may result in the bearing end of the rod striking the nozzle, causing damage to the nozzle or loosening it from the block. A damaged, bent, or loosened nozzle may cause a loss of main gallery oil pressure. In these cases, piston overheating or lack of adequate lubrication may result in severe engine damage.

15. Position the ring compressor, with piston and connecting rod inside, into the proper cylinder until the ring compressor is resting squarely on the cylinder liner. See Figure 1-301.

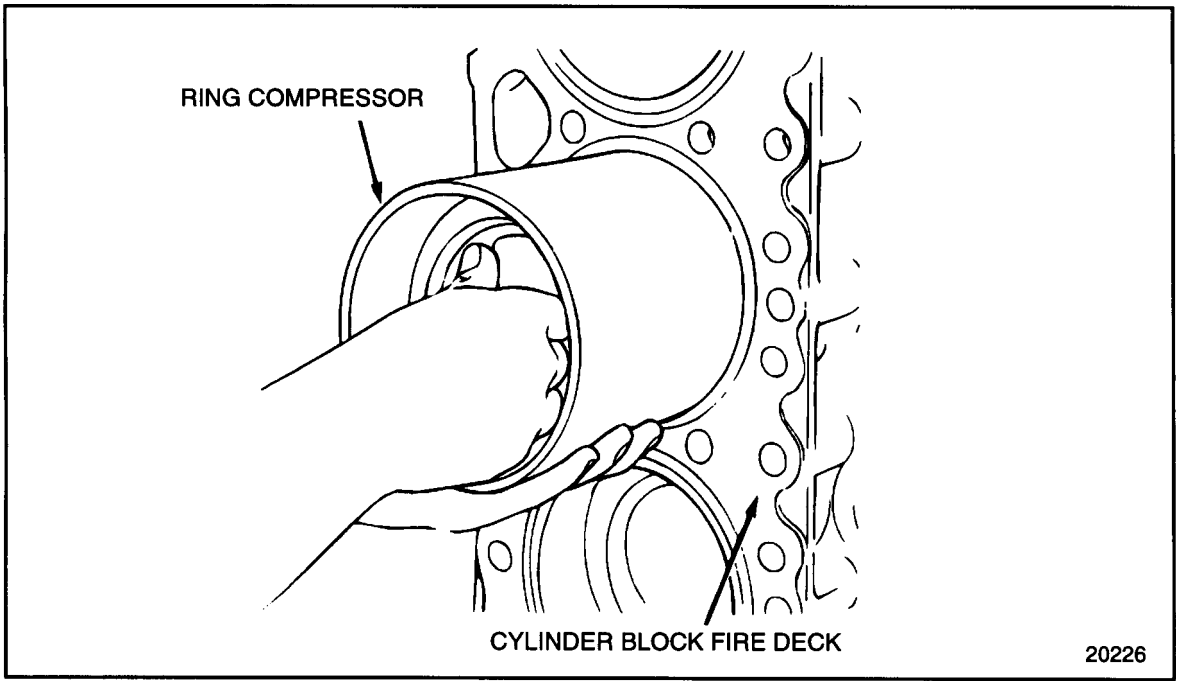

Figure 1-301 Use of Ring Compressor

 Copyright © 2004 DETROIT DIESEL CORPORATION

NOTICE:
Do NOT force the piston into the liner. The oil ring expander applies considerable force on the oil ring. Therefore, care must be taken during the loading operation to prevent ring breakage.

16. Push the piston and connecting rod assembly down into the liner until the piston is free of the ring compressor.
17. Remove the piston ring compressor.
18. Push or tap the piston and connecting rod assembly into the liner, turning the rod, if necessary, until the upper bearing shell is firmly seated on the appropriate crankshaft journal.
19. Remove the connecting rod guide from the ends of the connecting rod bolts.

NOTE:
Be sure the connecting rod bolts have not been unseated or turned and the bearing locating tang is in its proper location.

20. Place the lower bearing shell in the connecting rod cap, indexing the tang on the bearing with the notch in the cap.
21. Lubricate the bearing shell with clean engine oil.
22. Install the bearing cap. The number on the cap and rod should be on the same (oil cooler) side. See Figure 1-302.

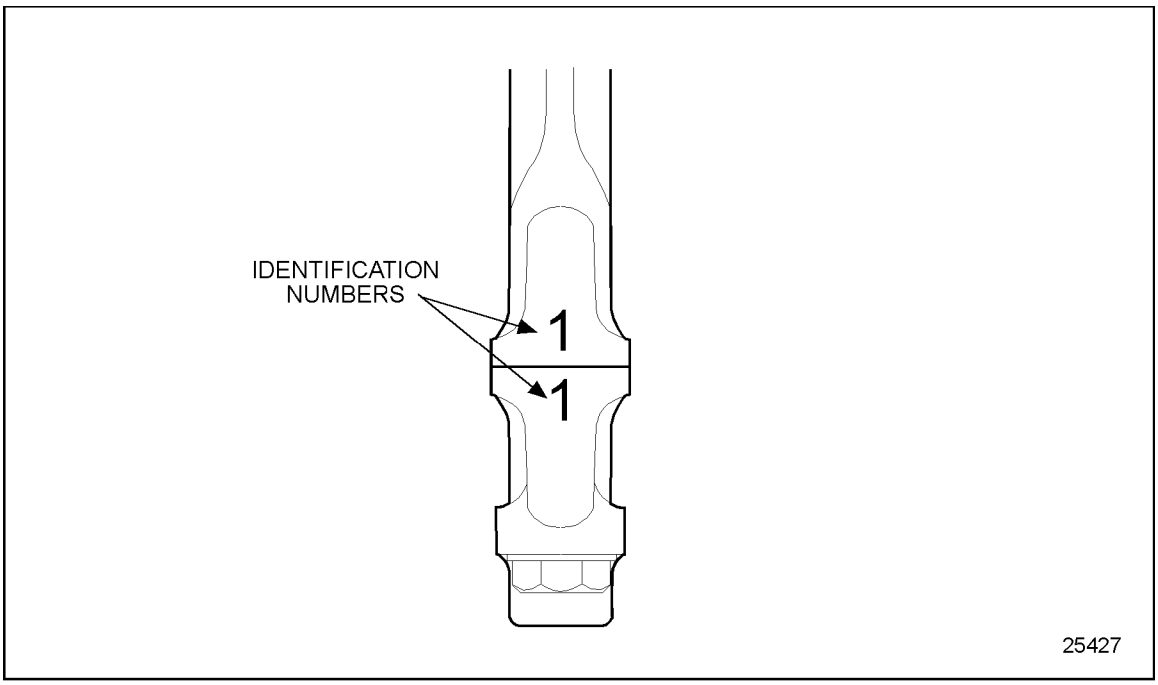

Figure 1-302 Connecting Rod and Cap Identification

(Rev. 2004) *All information subject to change without notice.*
6SE483 0401 Copyright © 2004 DETROIT DIESEL CORPORATION

23. Torque the connecting rod bolts alternately to 160-185 N·m (118-137 lb·ft).
24. Check connecting rod side clearance by moving the rod from crank cheek to crank cheek. If there is no clearance, check for proper bearing cap installation.
25. Install the remaining piston and rod assemblies in the same manner.
26. Install a new head gasket. Refer to section 1.2.5.
27. Install the cylinder head. Refer to section 1.2.5.
28. If previously removed, install the piston cooling nozzles at the base of the cylinder bores.
29. Install the lubricating oil pump inlet pipe and screen assembly, and the lubricating oil pump. Refer to section 3.2.6.
30. Install the oil pan. Refer to section 3.11.4.
31. Complete any other engine assembly as necessary.
32. After the engine has been completely assembled, refill the crankcase to the proper level on the dipstick. Refer to section 13.13.1.
33. Close the drain cocks and fill the engine with the recommended coolant. Refer to section 13.13.4, for refilling procedure and refer to section 5.4.

NOTE:
Coolant system maintenance is very important. Bleed off all the air from the system and top off.

34. Perform the following steps for verifying repairs made to the piston and connecting rod assembly:
    [a] If new parts such as pistons, rings, cylinder liners or bearings were installed, operate the engine on the run-in schedule. Refer to section 11.8.3.2.
    [b] If used parts such as pistons, rings, cylinder liners or bearings were installed, refer to section 11.3 for verification of proper piston and connecting rod assembly installation.

Install the 14L and 12.7 EGR On-Highway liner, piston and connecting rod assembly as follows:

1. If the rings have been removed, install them onto the dome, refer to section 1.17.4. If the piston rings are installed, proceed to step 2.
2. Add clean engine oil to a clean pan at least 305 mm (12 in.) in diameter, until the level reaches approximately 76 mm (3 in.).
3. Place the piston and connecting rod assembly into pan, with the dome of the piston on the bottom of the pan. See Figure 1-303.

 Copyright © 2004 DETROIT DIESEL CORPORATION

4. Coat the piston liberally with the engine oil, saturating the piston rings and lands.

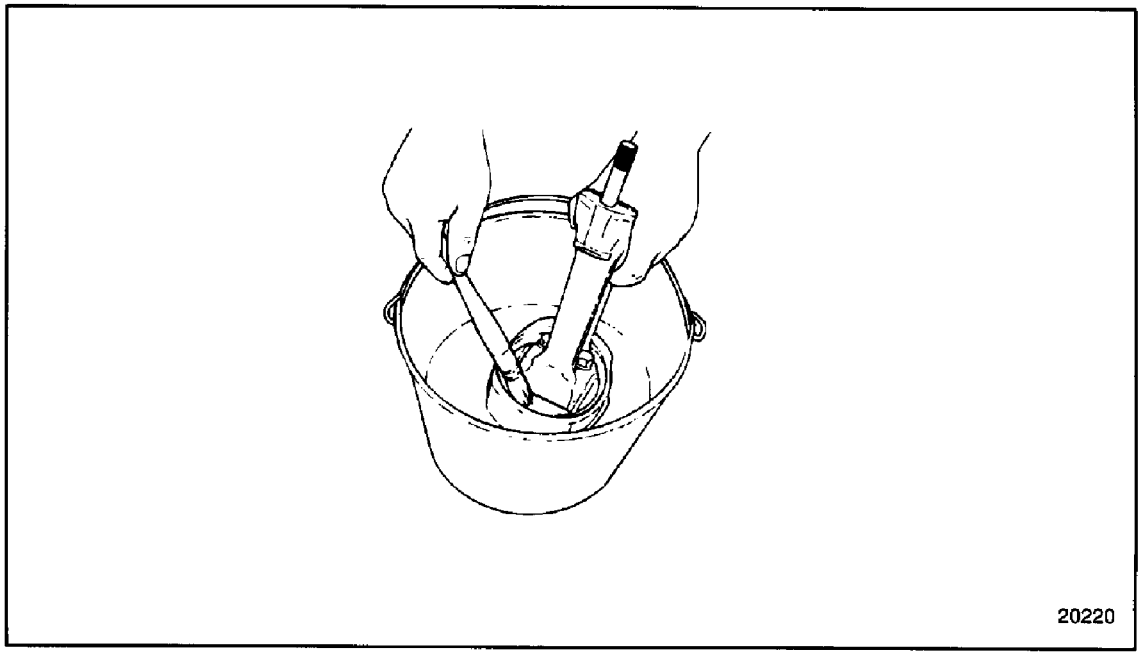

Figure 1-303 Piston and Connecting Rod Assembly Lubrication

5. Remove assembly from pan and position (stagger) the piston ring gaps properly on the piston at 90 degree intervals. See Figure 1-304 for diesel engines.

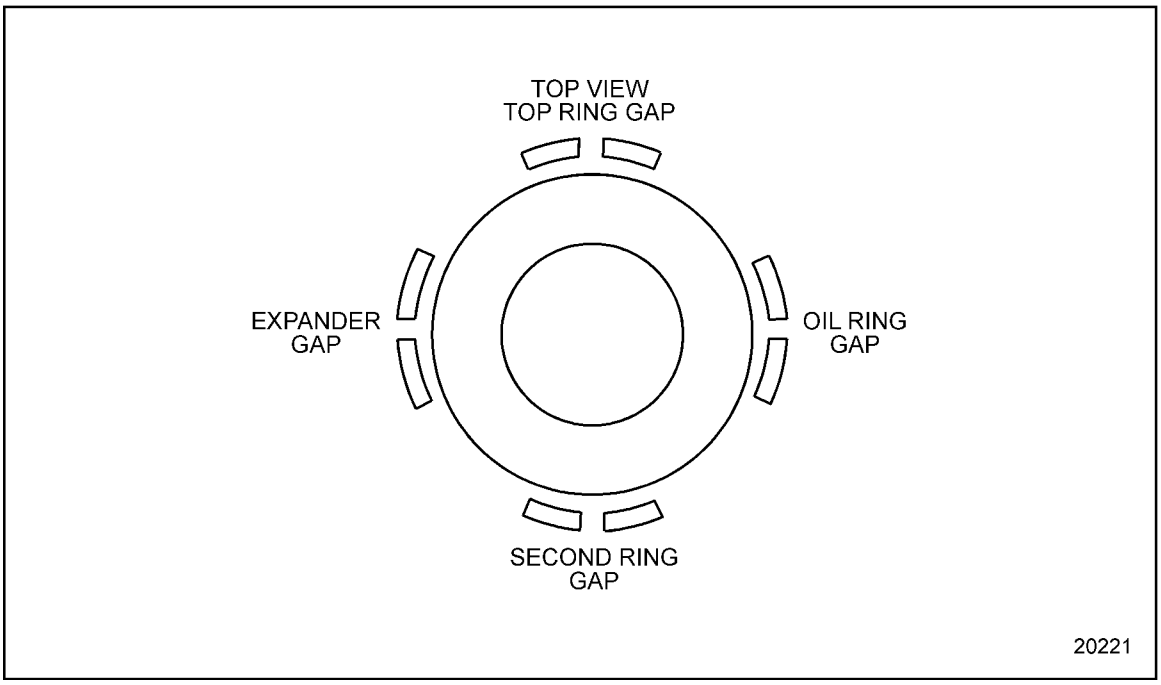

Figure 1-304 Piston Ring Positioning (Diesel)

(Rev. 2004) *All information subject to change without notice.*
6SE483 0401 Copyright © 2004 DETROIT DIESEL CORPORATION

6. Place the piston, dome down, in the bottom of the pan. Center the dome of the piston within the pan.
7. Coat the inside diameter of the ring compression tool, J 43397 liberally with clean engine oil from the pan. For 12.7L and 14L On-Highway forged steel piston assemblies procede to step 8.
8. For 12.7L and 14L On-Highway piston assemblies only, coat the inside diameter of the ring compression tool J 46927 for 12.7L engines and J 46929 for 14L engines.
9. Clamp the ring compressor, with groove (pilot bore) of the compressor facing away from the connecting rod, around the dome and rings.
10. Once the compressor is "clamped," ensure the piston can rotate freely. If rotation is hindered, remove the compressor and reposition the dome and rings, or inspect for ring damage.
11. Lubricate and install cylinder liner seals.
12. Lubricate the inside of the cylinder liner.
13. Position the liner so it rests on its flange.

 Copyright © 2004 DETROIT DIESEL CORPORATION

14. Position the ring compressor clamped around the dome and rod assembly so the groove rests on the bottom of the cylinder liner. See Figure 1-305 and see Figure 1-306.

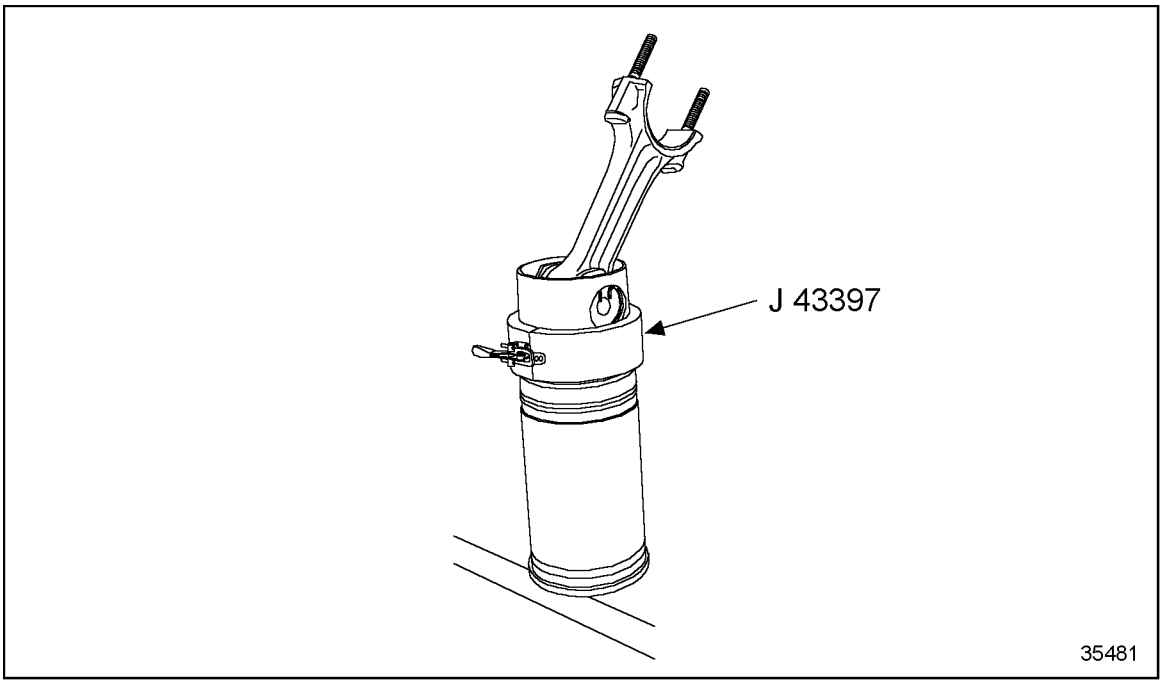

Figure 1-305 Installation of Ring Compressor

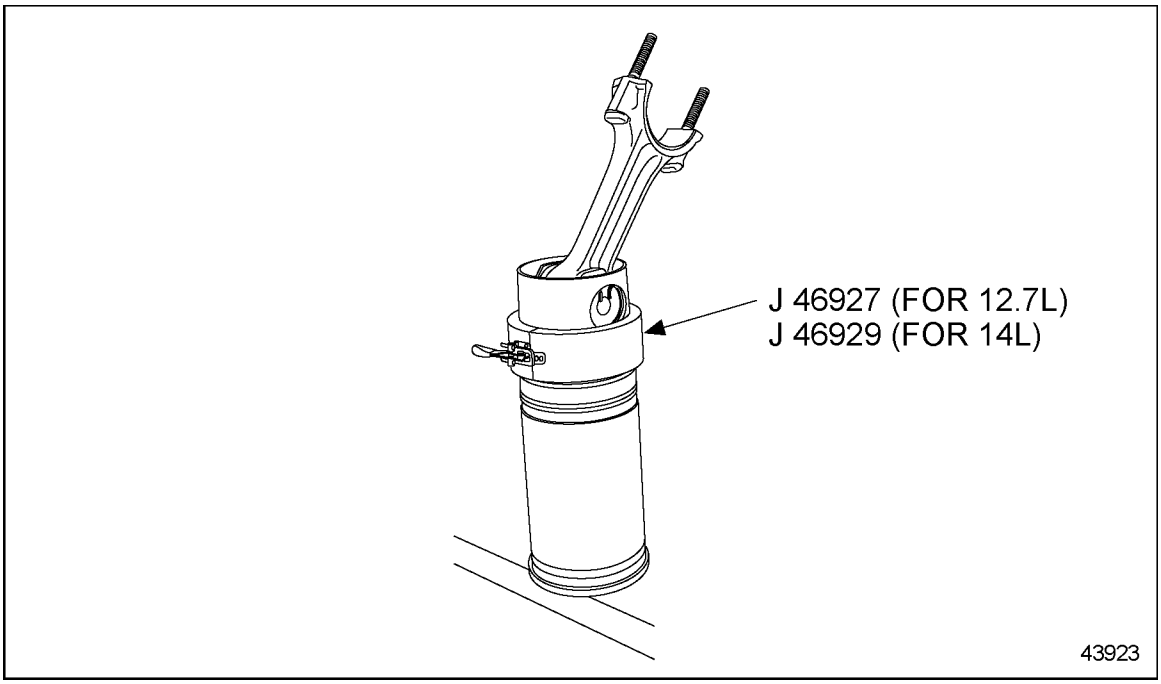

Figure 1-306 Installation of Ring Compressor for One piece Forged Steel Piston Assembly

(Rev. 2004) *All information subject to change without notice.*
6SE483 0401 Copyright © 2004 DETROIT DIESEL CORPORATION

NOTICE:
Do NOT force the dome into the liner. Considerable force on the dome could scratch or otherwise damage the inside of the cylinder liner. Therefore, care must be taken during the installation of the dome to prevent damage.

15. With care and moderate pressure, press the dome into the liner until the dome is approximately half way into the liner. See Figure 1-307.

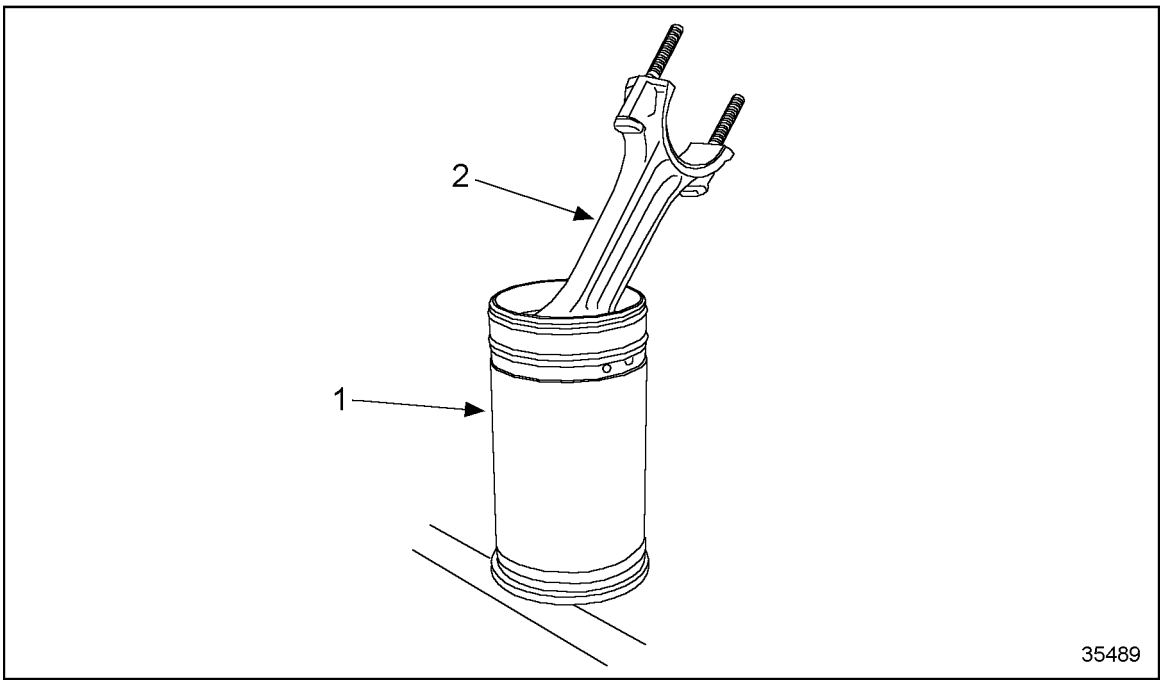

1. Cylinder
2. Piston Rod

Figure 1-307 Installation of Piston and Rod Assembly

16. Remove the ring compressor.
17. Remove the cap from the connecting rod.
18. Install oil nozzle protectors, J 43661.
19. Position the throw of the crankshaft journal to bottom dead center for the cylinder being installed with the liner, piston and connecting rod assembly.

 Copyright © 2004 DETROIT DIESEL CORPORATION

NOTICE:

When installing a forged steel piston into the engine, care must be taken to avoid damaging the piston-cooling nozzle installed at the base of the cylinder bore. Before loading the piston/rod liner assembly into the block, turn the connecting rod so that the bearing end is offset approximately 10-15 degrees and not perpendicular to the crankshaft, as is the case with cast iron pistons. This will ensure that the rod end does not strike the nozzle when the piston is pushed in the cylinder liner. Once the rod end is past the nozzle, turn the rod so that the bearing end is perpendicular to the crankshaft journal.

Notice

Failure to orient the piston connecting rod properly during forged steel piston installation may result in the bearing end of the rod striking the nozzle, causing damage to the nozzle or loosening it from the block. A damaged, bent, or loosened nozzle may cause a loss of main gallery pressure. In these cases piston overheating or lack of adequate lubrication may result in severe engine damage.

20. For steel forged one piece piston assemblies, ensure arrow on piston dome is pointing toward the front of the engine during installation. See Figure 1-308.

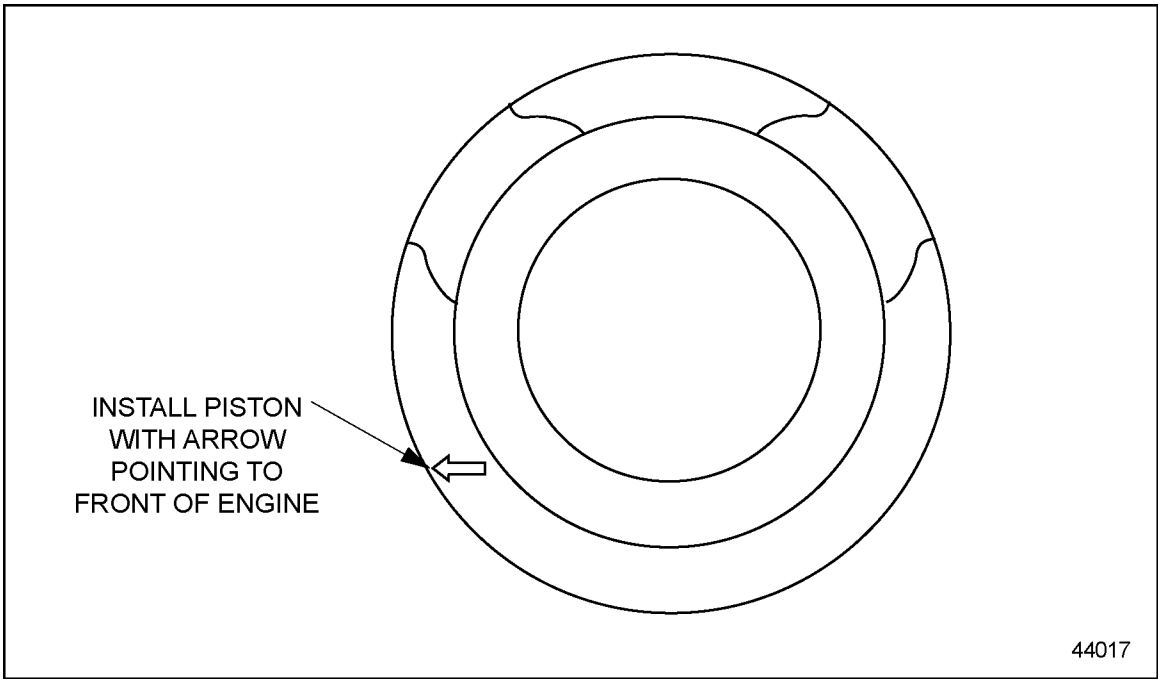

Figure 1-308 Piston Dome Steel Forged One Piece Piston Assembly

(Rev. 2004) *All information subject to change without notice.*
6SE483 0401 Copyright © 2004 DETROIT DIESEL CORPORATION

21. Slide the cylinder kit assembly into the cylinder block noting the position of the connecting rod to ensure the rod is assembled to the same position as it was when removed. Push by hand until resistance is felt. See Figure 1-309.

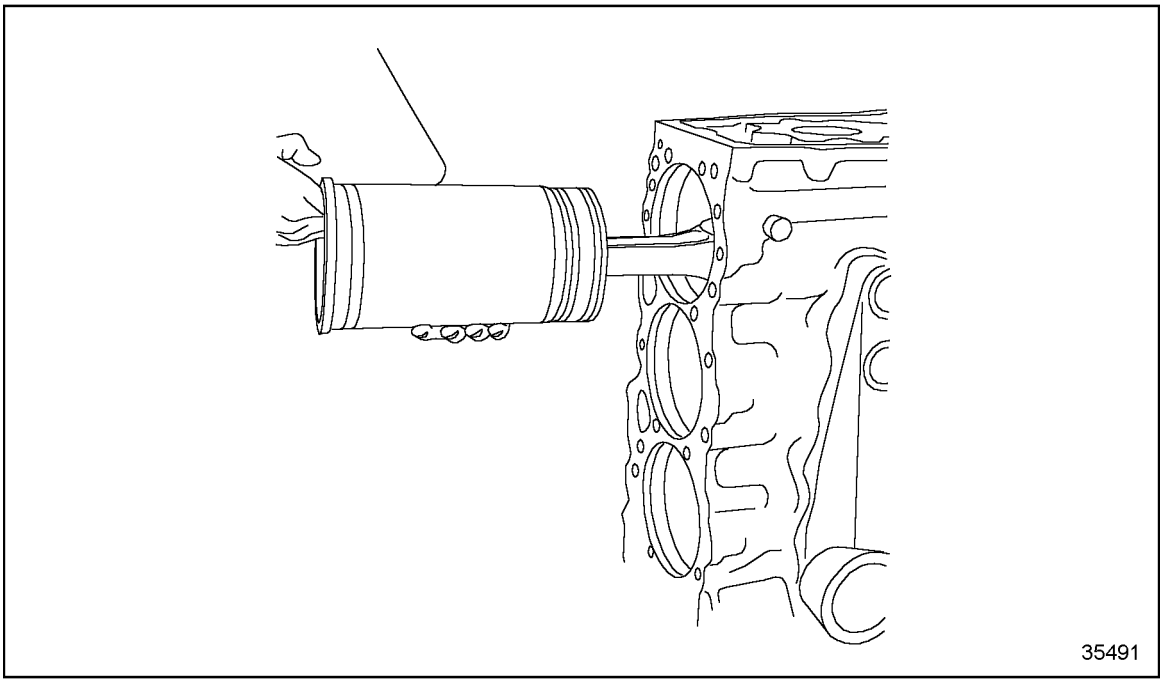

Figure 1-309 Installation of Liner, Piston and Rod Assembly into Engine Block

 Copyright © 2004 DETROIT DIESEL CORPORATION

22. Install J 35597-A , over the kit to be installed. See Figure 1-310.

NOTE:
It is necessary to leave the cylinder kit installation tool in place until after the liner protrusion is measured.

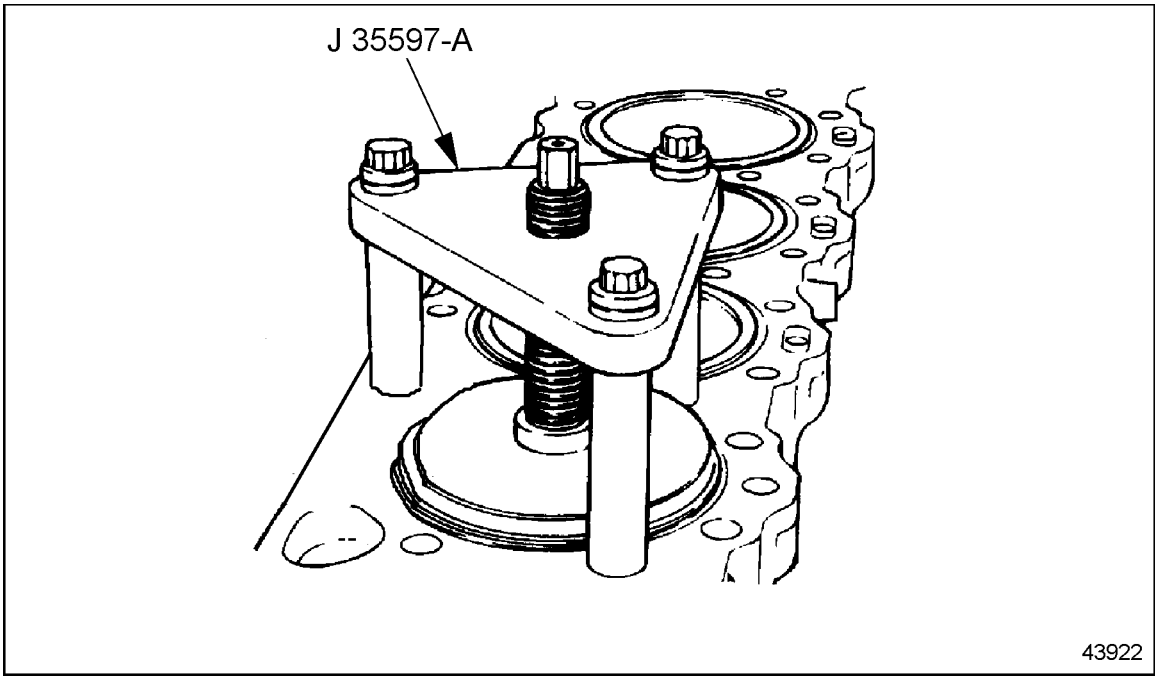

Figure 1-310 Cylinder Liner Installation Tools

23. Thread three cylinder head bolts through the tool and into a head bolt hole, so that the round shoe of the tool is centered over the liner.
24. Tighten the three bolts.

NOTE:
It is not necessary to torque the bolts.

25. Turn the threaded center bolt in a clockwise direction. As the round shoe of the tool reaches the liner, ensure that the shoe is properly positioned into the cylinder liner.

NOTE:
Use care for proper rod positioning during installation.

26. Continue turning the bolt until the liner bottoms in the cylinder counterbore. Apply a tightening torque of 60 N·m (44 lb·ft) to the installation tool center bolt.
27. Install a dial indicator sled gage. See Figure 1-311.
28. Measure the distance from the top of the liner flange to the top of the block. See Figure 1-311.

(Rev. 2004) *All information subject to change without notice.*
6SE483 0401 Copyright © 2004 DETROIT DIESEL CORPORATION

[a] Allowable liner protrusion is -0.0127-0.076 mm (-0.0005 -0.003 in.) with no more than 0.0508 mm (0.002 in.) variation between any two adjacent cylinders. Specifications are listed in Table 1-18.

[b] If the liner protrusion exceeds the maximum allowable, remove the kit and check for debris under the liner flange.

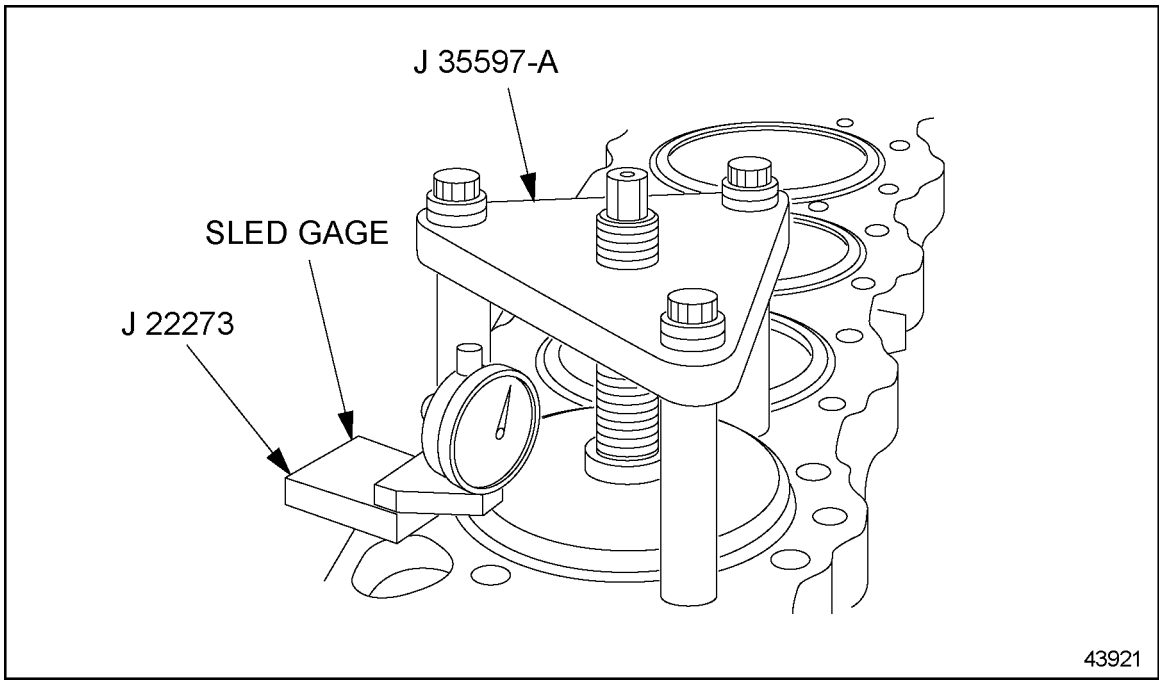

Figure 1-311 Cylinder Liner Protrusion

29. Remove the cylinder liner tool.
30. Push or tap the piston and connecting rod within the liner until the upper rod bearing is firmly seated on the appropriate crankshaft journal.
31. Remove the rod bolt protectors.
32. Lubricate the lower bearing shell with clean engine oil.
33. Install the bearing cap. The number on the cap and rod should be on the same (oil cooler) side.
34. Torque the connecting rod bolts alternately to 160-185 N·m (118-137 lb·ft).
35. Check connecting rod side clearance by moving the rod from crank cheek to crank cheek. If there is no clearance, check for proper bearing cap installation.
36. Install the remaining piston and rod assemblies in the same manner.
37. Install a new head gasket. Refer to section 1.2.5.
38. Install the cylinder head. Refer to section 1.2.5.
39. If previously removed, install the piston cooling nozzles at the base of the cylinder bores.

 Copyright © 2004 DETROIT DIESEL CORPORATION

40. Install the lubricating oil pump inlet pipe and screen assembly, and the lubricating oil pump. Refer to section 3.2.6.
41. Install the oil pan. Refer to section 3.11.4.
42. Complete any other engine assembly as necessary.
43. After the engine has been completely assembled, refill the crankcase to the proper level on the dipstick. Refer to section 13.13.1.
44. Close the drain cocks and fill the engine with the recommended coolant. Refer to section 13.13.4, for refilling procedure and refer to section 5.4.

NOTE:
Coolant system maintenance is very important. Bleed off all the air from the system and top off.

(Rev. 2004) *All information subject to change without notice.*
6SE483 0401 Copyright © 2004 DETROIT DIESEL CORPORATION

1.20 CONNECTING ROD

Two types of connecting rod are used in Series 60 engines. The open end or saddle type connecting rod is used with cast iron pistons which have bolt-on, style piston pins. The closed end or trunk type connecting rod is used with forged steel pistons which have floating, trunk style piston pins.

NOTICE:
Do not mix forged steel pistons used with closed end connecting rods and cast iron pistons used with open-end connecting rods in the same engine. This will cause severe engine damage.

OPEN-END CONNECTING ROD: The open-end connecting rod is forged to an "I" section with an open or saddle type contour at the upper end and a bearing cap at the lower end. The surface of the connecting rod is shot-peened for added strength. Therefore, no grinding is permitted since it will remove the benefits of shot-peening.

The upper end of the connecting rod is machined to match the contour of the piston pin. The piston pin is secured to the connecting rod with two special bolts and spacers. The lower bearing cap is secured to the connecting rod by two specially machined bolts and nuts. See Figure 1-312.

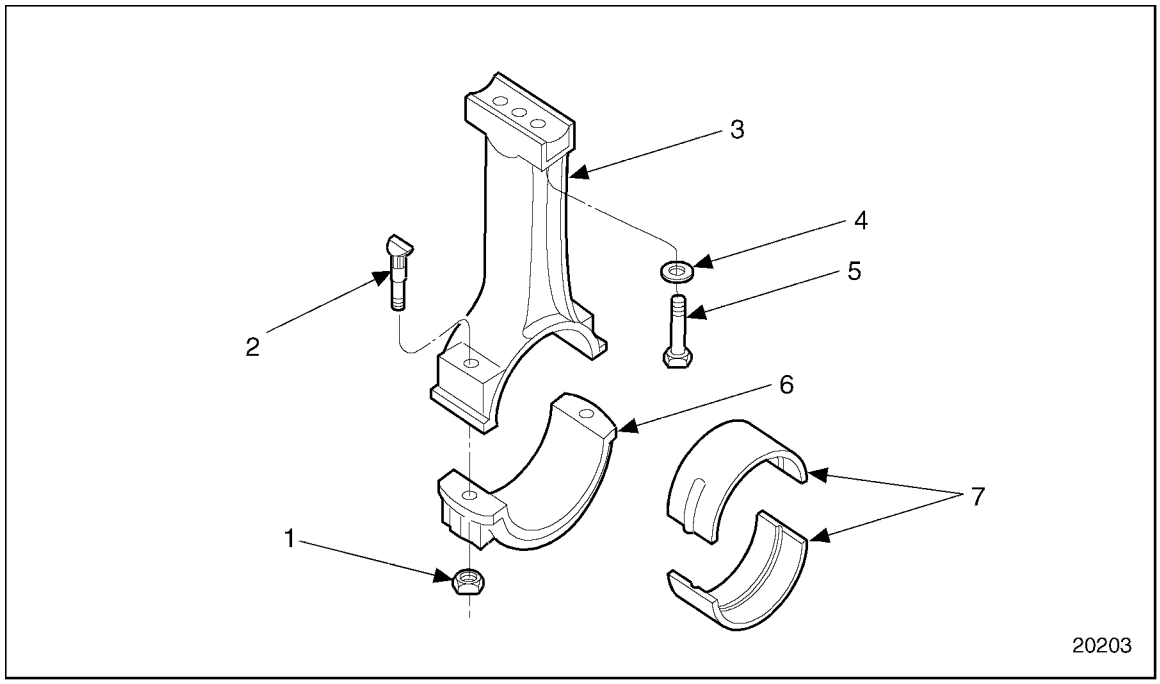

1. Connecting Rod Nut (2)
2. Notched Bolt (2)
3. Connecting Rod
4. Spacer Washer (2)
5. Piston Pin Bolt (2)
6. Connecting Rod Bearing Cap
7. Bearing Shells

Figure 1-312 Connecting Rod and Bearing Shells (Open-End Rod)

 Copyright © 2004 DETROIT DIESEL CORPORATION

The two special bolts locate the cap relative to the upper end. The assembly is machined as a unit and must not be used in the engine with any other cap or upper end. Orientation of the cap to the upper end is identified by stamped numbers.

NOTE:
The Series 60G engine connecting rod is shorter in length and identified by "Natural Gas" on the side.

The current connecting rods with smaller rod chamfers replaced the former connecting rods, effective with the following engine serial numbers: (listed in Table 1-9.)

Engine Model	Engine Serial Number
6067WK60 (11.1L)	6R184522
6067GK60 (12.7L)	6R188251

Table 1-9 New Connecting Rod Replacements

This change was made to allow installation of new, wider connecting rod bearings that provide improved oil film thickness and reduced bearing pressures.

The rod chamfers on the current connecting rods are smaller than those on the former rods. This has been done to provide proper support for the wider bearings. To conform with this change, new crankshafts with smaller fillet radii have been released. Refer to section 1.7 for information on the new crankshafts.

NOTE:
The current connecting rods, bearings, and crankshafts *must* be used together to ensure interchangeability. Former parts cannot be mixed with new parts in the same engine. The former connecting rods will continue to be available for engines built prior to the unit serial numbers as listed in Table 1-9.

The connecting rod bearing shells are precision made and are of the replaceable type. The upper bearing shell is seated in the connecting rod and a lower bearing shell is seated in the connecting rod cap. These bearings are not identical. The upper and lower bearing shells are located in the connecting rod by a tang at the parting line at one end of each bearing shell. See Figure 1-312.

The tri-metal bearing wear surfaces use a steel backing. First, an optimum composition (copper, tin and lead) lining is bonded to the steel back. A nickel barrier above the lining and the overlay serves to prevent tin migration. A soft lead overlay, 0.025 mm (0.001 in.) thick, provides run-in protection, and an initial wear surface. A flash tin plate, front and back, is for added corrosion protection and resistance during shipping and handling. These bearings are identified by the satin silver sheen of the tin when new, and a dull gray of the overlay after being in service.

(Rev. 2004) *All information subject to change without notice.*
6SE483 0401 Copyright © 2004 DETROIT DIESEL CORPORATION

The oil hole through the upper bearing shell supplies oil to the oil passage in the connecting rod, thereby providing a supply of lubricating oil from the crankshaft to the connecting rod bearings, piston-pin bushing, and underside of the piston dome. The upper shell is grooved from one edge to the oil hole. The lower shell has a full-length (180 degree) groove. See Figure 1-313.

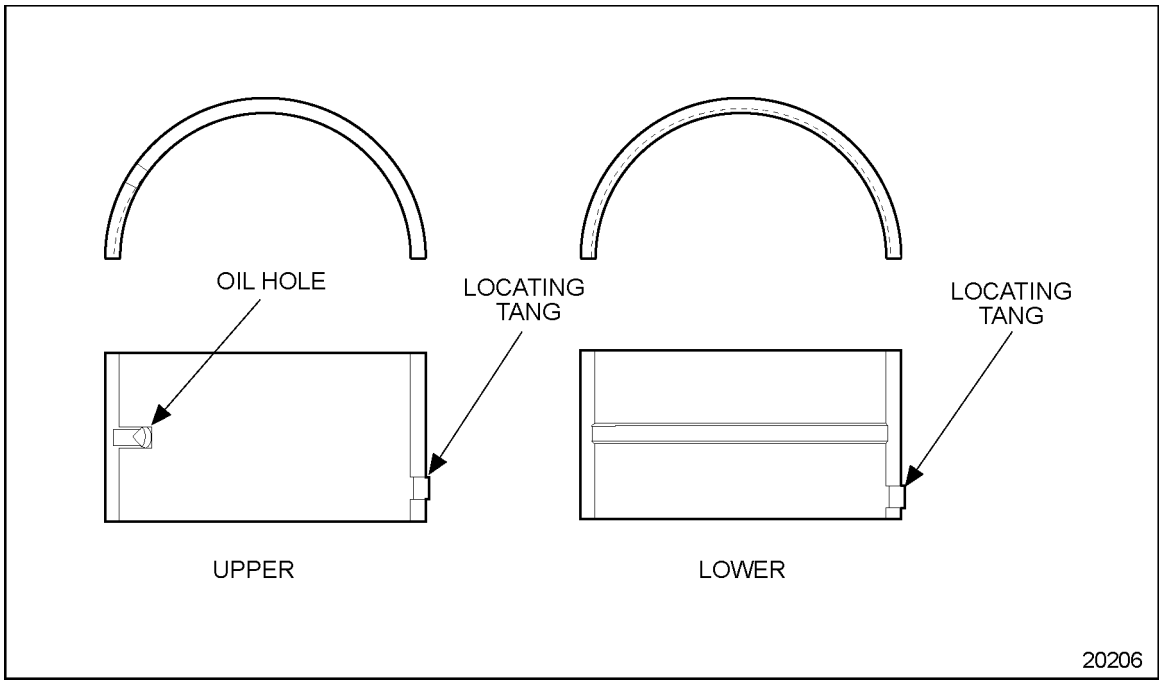

Figure 1-313 Connecting Rod Bearing Detail (Open-End Rod)

The connecting rods bearing caps are numbered according to the cylinder position with matching numbers stamped on the connecting rod tang side.

The current, wider connecting rod bearings replaced the former connecting rod bearings as listed in Table 1-26.

This change was made to improve oil film thickness and reduce bearing pressures. The current bearings are 47.44-47.14 mm (1.868-1.856 in.) wide. The former bearings were 43.44-43.13 mm (1.710-1.698 in.) wide. To provide full support for the wider bearings, new connecting rods with smaller rod chamfers and current crankshafts with smaller fillet radii were also released. Refer to section 1.7 for information on the current crankshafts.

NOTE:
The current connecting rod bearings, connecting rods, and crankshafts *must* be used together to ensure interchangeability. Former parts cannot be mixed with new parts in the same engine. The former bearing shells will be available for engines built prior to the unit serial numbers as listed in Table 1-9.

 Copyright © 2004 DETROIT DIESEL CORPORATION

CLOSED-END CONNECTING ROD: Each connecting rod is forged to an "I" section with a closed hub at the upper end and a bearing cap at the lower end. See Figure 1-315. Unlike the open-end connecting rod, the closed end rod is not drilled prior to model year 2000. Lubrication for the piston and piston pin is supplied by a spray nozzle bolted to the block at the base of each cylinder bore. (Current blocks are drilled and tapped for installation of the cooling nozzles into the main oil gallery.) These nozzles spray crankcase oil upwards onto the piston and piston pin during engine operation, providing the required lubrication and cooling.

NOTE:
The current connecting rod for 14 L engines and model year 2000 12.7 L engines use a drilled passage way through the rod to lubricate the piston pin bushing. These connecting rods can be mixed within an engine with the former non-drilled connecting rod. See Figure 1-314.

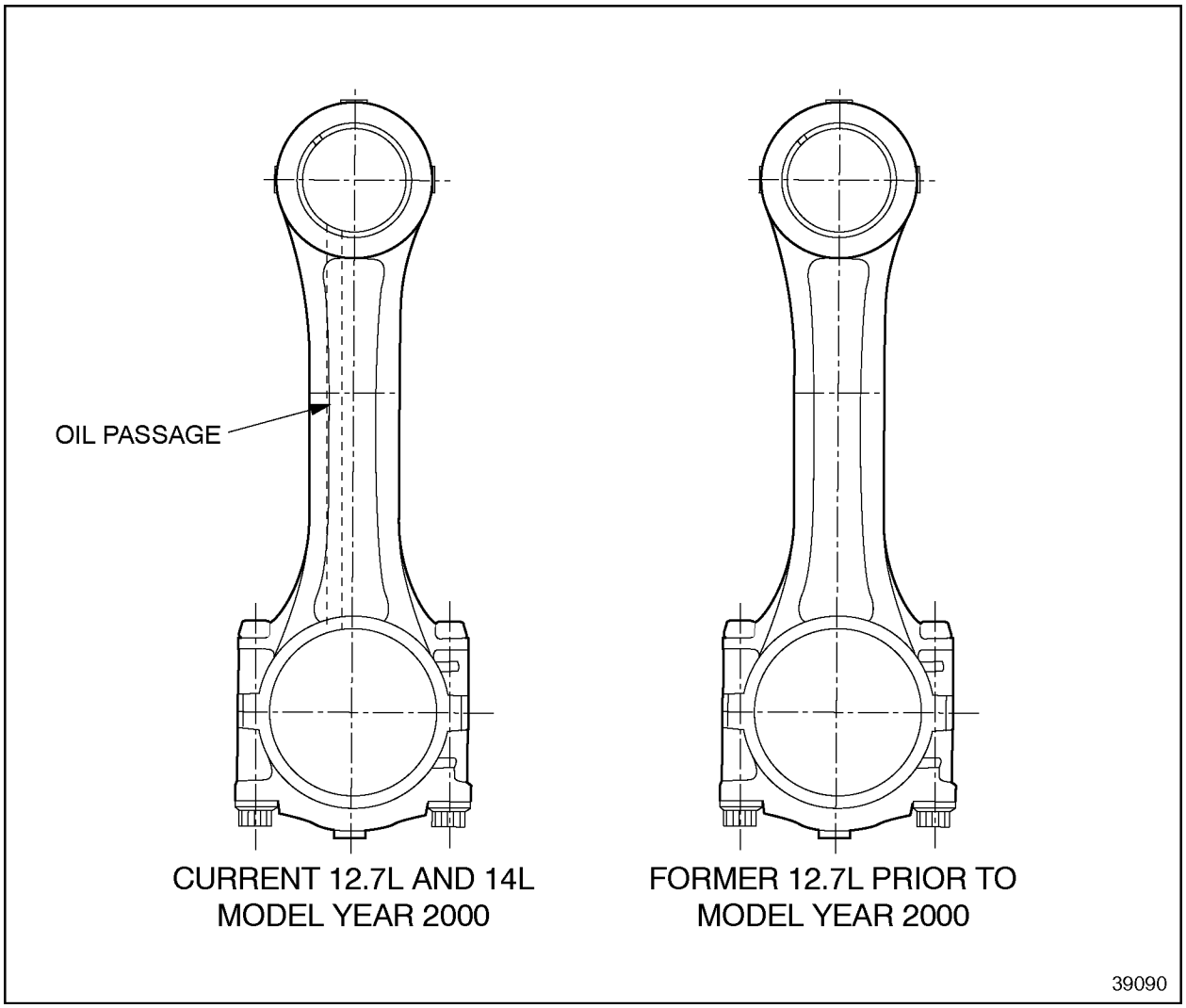

Figure 1-314 Current and Former Closed-End Connecting Rods

(Rev. 2004) *All information subject to change without notice.*
6SE483 0401 Copyright © 2004 DETROIT DIESEL CORPORATION

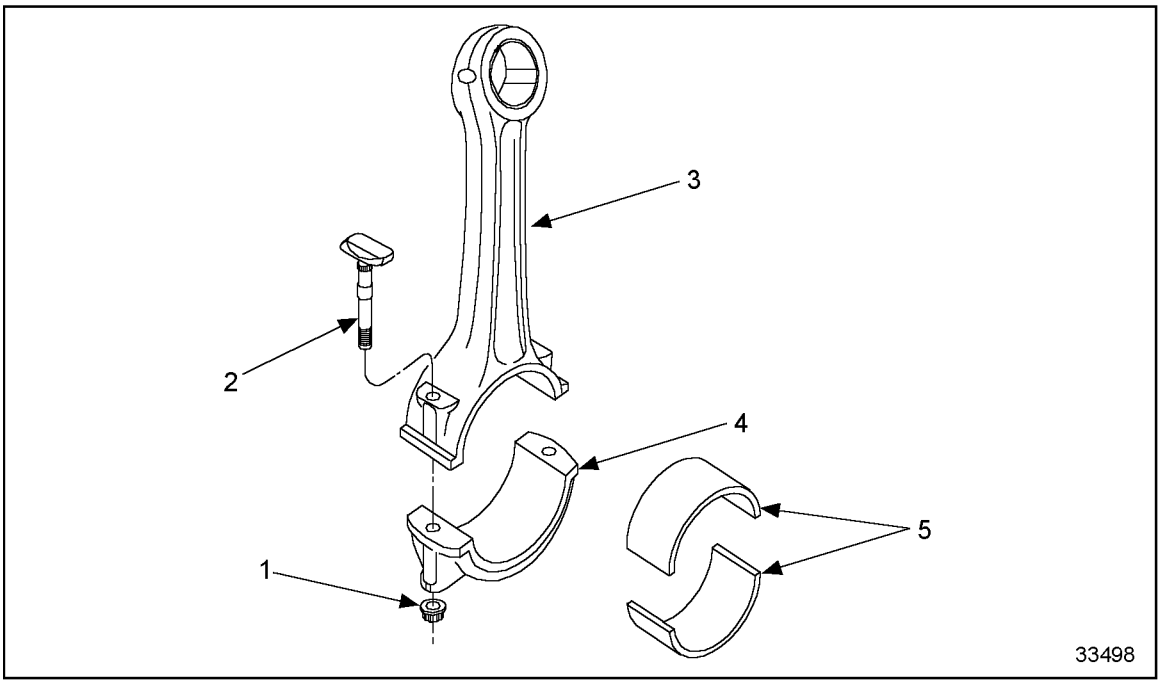

1. Connecting Rod Nut (2)
2. Notched Bolt (2)
3. Connecting Rod
4. Connecting Rod Bearing Cap
5. Bearing Shells

Figure 1-315 Connecting Rod and Bearing Shells (Closed-end Rod)

The upper end of the rod has a pressed-in, machined bushing with two scallops, 180 degrees apart. Spray oil entering these scallops lubricates the piston pin and bushing during engine operation. The piston pin floats in the bushings of both the piston and the connecting rod.

The lower bearing cap is secured to the connecting rod by two specially machined bolts and nuts. See Figure 1-315.

The two special bolts locate the cap relative to the upper end. The assembly is machined as a unit and must not be used in the engine with any other cap or upper end. Orientation of the cap to the upper end is identified by stamped numbers.

 Copyright © 2004 DETROIT DIESEL CORPORATION

Closed-end connecting rods prior to model year 2000 have no center-drilled lubricating oil passage. See Figure 1-316, see Figure 1-317 and see Figure 1-318.

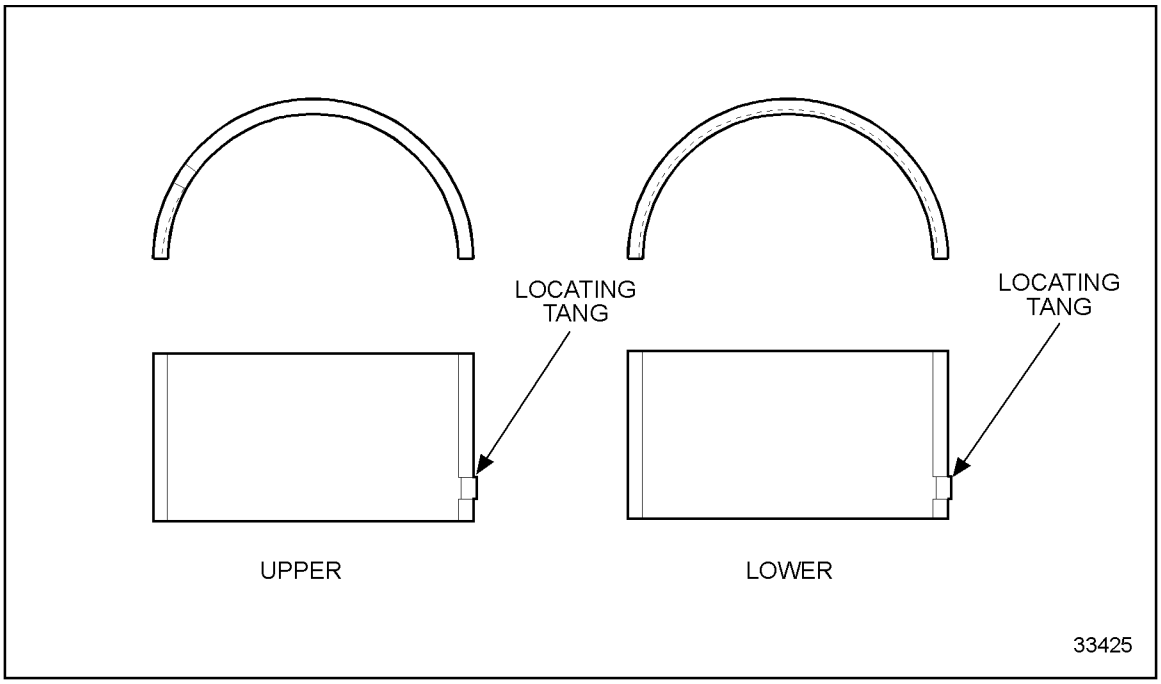

Figure 1-316 Connecting Rod Bearing Detail (Closed End Rod Without a Drilled Passage)

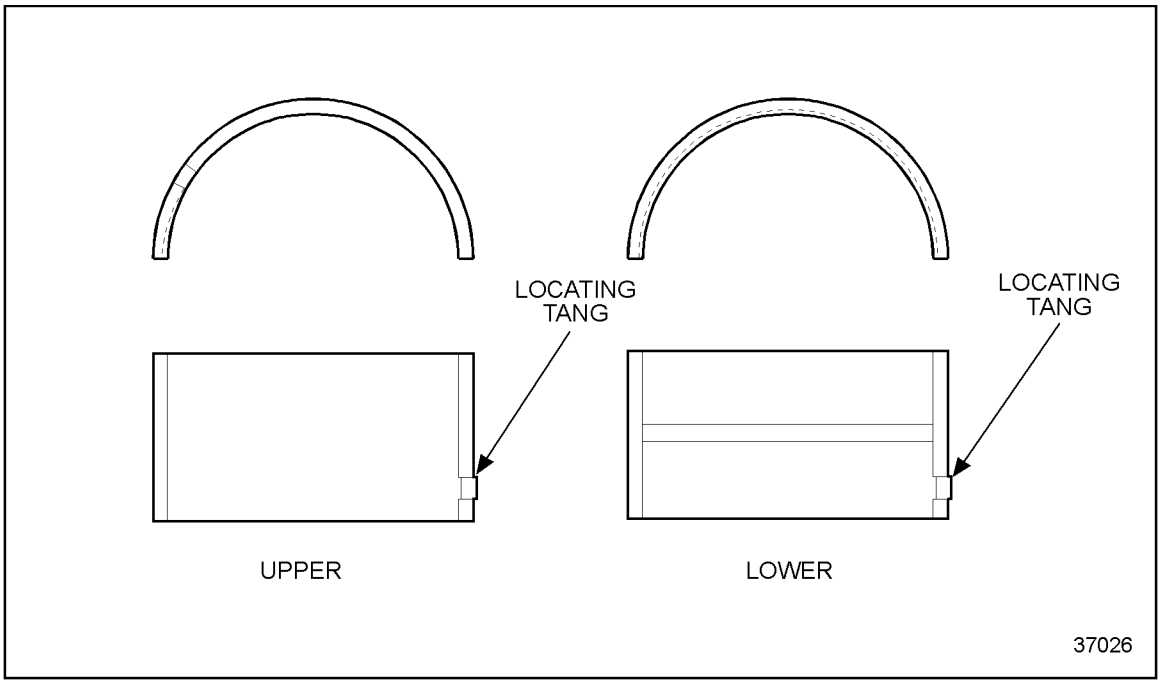

Figure 1-317 Connecting Rod Bearing Detail for Pleasure Craft Marine (Closed End Rod Without a Drilled Passage)

(Rev. 2004) *All information subject to change without notice.*
6SE483 0401 Copyright © 2004 DETROIT DIESEL CORPORATION

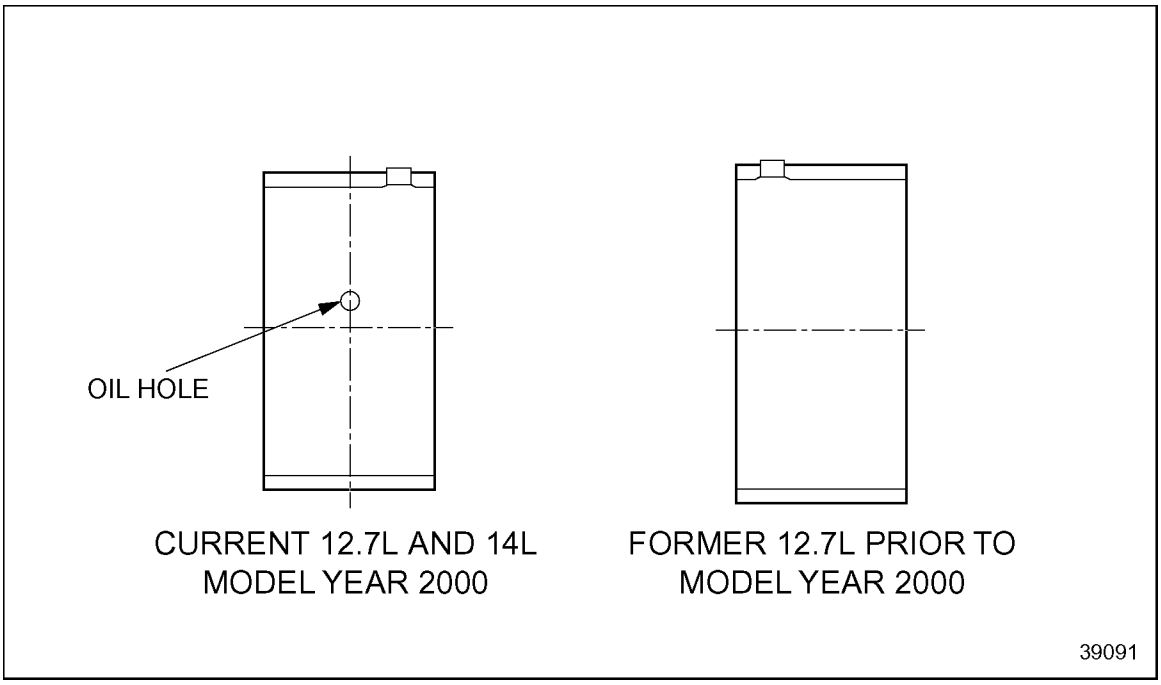

Figure 1-318 Connecting Rod Bearings for 14 L and 12.7 L Engines

The connecting rod bearing caps are numbered according to the cylinder position with matching numbers stamped on the connecting rod tang side.

The connecting rod bearing shells are precision made and are of the replaceable type. The upper bearing shell is seated in the connecting rod and a lower bearing shell is seated in the connecting rod cap. The upper and lower bearings are identical (except for marine applications see Figure 1-317). The upper and lower bearing shells are located in the connecting rod by a tang at the parting line at one end of each bearing shell.

The tri-metal bearing wear surfaces use a steel backing. First, an optimum composition (copper, tin and lead) lining is bonded to the steel back. A nickel barrier above the lining and the overlay serves to prevent tin migration. A soft lead overlay, 0.025 mm (0.001 in) thick, provides run-in protection, and an initial wear surface. A flash tin plate, front and back, is for added corrosion protection and resistance during shipping and handling. These bearings are identified by the satin silver sheen of the tin when new and a dull gray of the overlay after being in service.

 Copyright © 2004 DETROIT DIESEL CORPORATION

1.20.1 Repair or Replacement of Connecting Rod

To determine if repair is possible or replacement is necessary, perform the following procedure. See Figure 1-319.

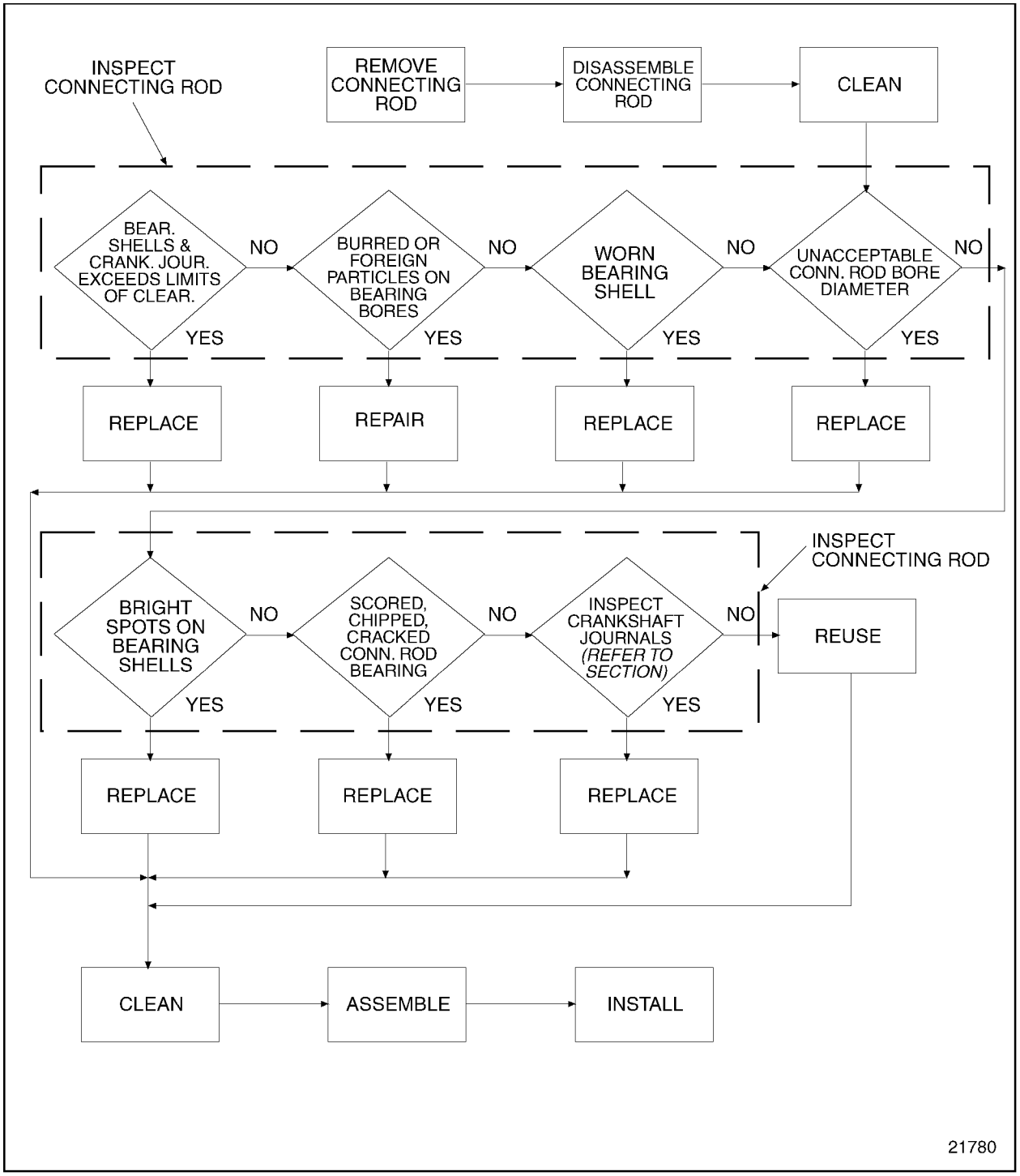

Figure 1-319 Flowchart for Repair or Replacement of Connecting Rod

(Rev. 2004) *All information subject to change without notice.*
6SE483 0401 Copyright © 2004 DETROIT DIESEL CORPORATION

1.20.2 Removal and Cleaning of the Connecting Rod

Before removal, make sure the connecting rods and caps are stamped with their correct cylinder location. If not marked, stamp location (1-6) on the tang side (cooler side) of the rod and cap.

Refer to section 1.19.2 for piston and connecting rod assembly removal procedure.

1.20.3 Disassembly of Connecting Rod

Disassemble the connecting rod as follows:

NOTE:
It is best to disassemble, inspect and assemble each connecting rod separately. It is very important to keep the connecting rod cap, and the upper and lower bearing shells to the original connecting rod.

1. Loosen and remove the two connecting rod nuts. See Figure 1-312.
2. Remove connecting rod cap and bearings shells. See Figure 1-312.

1.20.3.1 Inspection of Connecting Rod

Clean the bearings prior to inspection as follows:

1. Clean the bearings with fuel oil.

CAUTION:

To avoid injury from flying debris when using compressed air, wear adequate eye protection (face shield or safety goggles) and do not exceed 40 psi (276 kPa) air pressure.

2. Dry the bearings with compressed air.

Inspect the open-end connecting rod as follows:

1. Inspect the connecting rod saddle at the piston pin contact surface for traces of fretting and corrosion.
2. To repair, wet with fuel oil and smooth with crocus cloth.

 Copyright © 2004 DETROIT DIESEL CORPORATION

Inspect the closed-end connecting rod as follows:

NOTICE:
Reusing a connecting rod with a damaged or loose bushing may result in severe cylinder kit damage.

1. Inspect the piston pin bushing for indications of scoring. If scoring is found, replace the rod.
2. Inspect the piston pin bushing for indications of overheating. A bushing that has overheated may become loose. If a loose bushing is found, the rod *must be replaced.*

1.20.4 Assembly of Connecting Rod

Assemble connecting rod as follows:

1. Install the connecting rod cap with the numbers on the same (oil cooler) side on the connecting rod.
2. Lubricate the bolt threads with clean engine oil.

NOTICE:
Do not over torque the connecting rod bolt nuts. Over torque may permanently distort the connecting rod cap.

NOTICE:
Be sure the connecting rod bolt has not turned in the connecting rod before torque is applied to the nut.

3. Torque the bolt nuts to 160-185 N·m (118-137 lb·ft).

(Rev. 2004) *All information subject to change without notice.*
6SE483 0401 Copyright © 2004 DETROIT DIESEL CORPORATION

1.20.4.1 Inspection of Assembled Connecting Rod

Measure the connecting rod bearing diameter at five locations. See Figure 1-320.

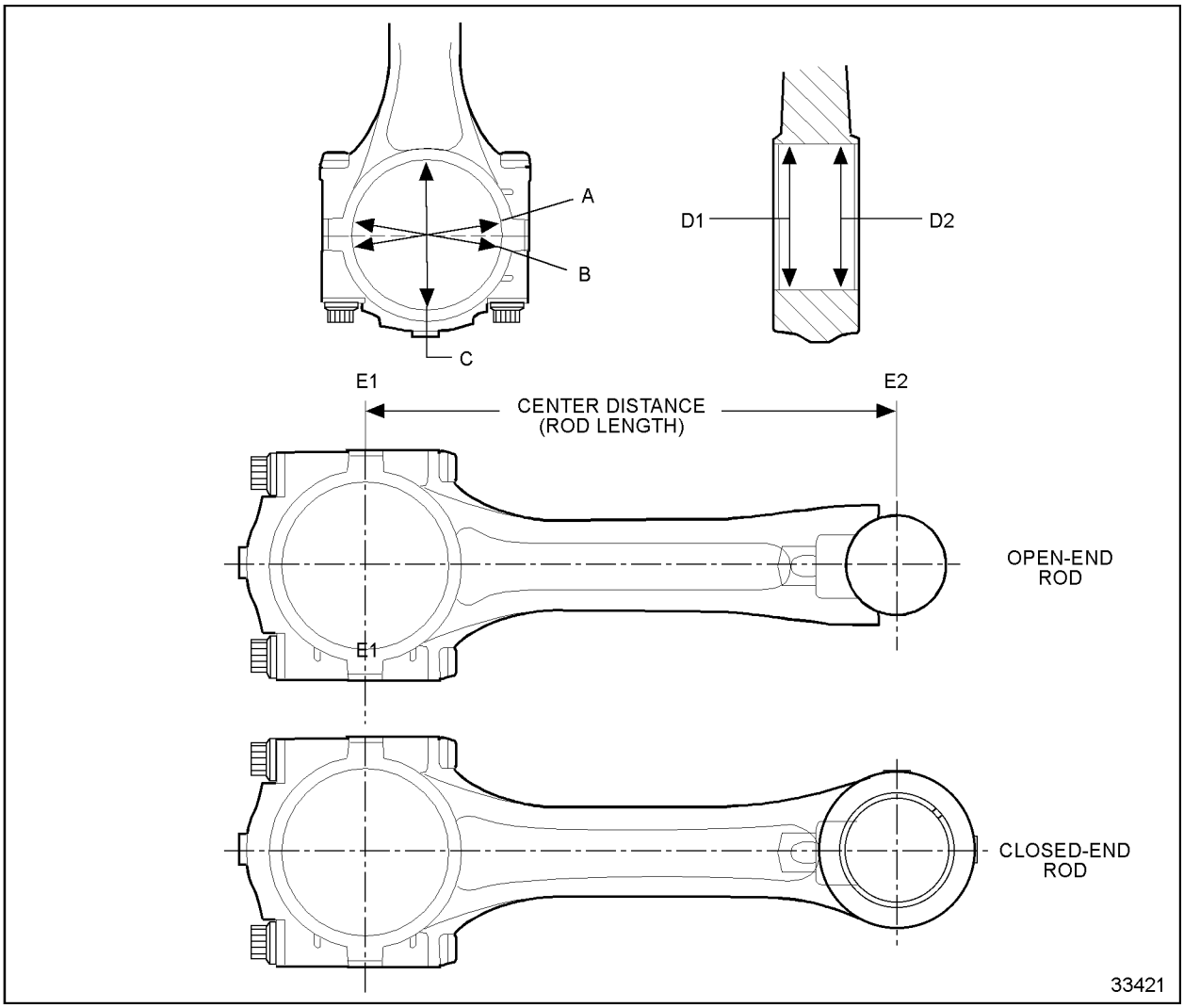

Figure 1-320 Dimensional Inspection of Connecting Rods

1. Calculate size of diameter at split line, W. [W= (A+B) ÷ 2]
2. Calculate the average bore out-of-round, X. [X=W-C] X must be between -0.012 and 0.012 mm (-0.0005 and 0.0005 in.).
3. Calculate the average connecting rod bearing bore size, Y. [Y= (W+X) ÷ 2] Y must be between:

   [a] For 12.7 and 11.1 L; 91.288 and 91.313 mm (3.594 and 3.595 in.).

   [b] For 14L and 12.7 EGR On-Highway; 101.288 and 101.3133 mm (3.988 and 3.989 in.).

 Copyright © 2004 DETROIT DIESEL CORPORATION

4. Determine taper, Z. [Z=D2-D1] Z must be between -0.012 and 0.012 mm (-0.0005 and 0.0005 in.).
5. Determine the rod length by finding the distance between E1 and E2. See Figure 1-320.
   [a] The acceptable rod length specification for 11.1 Liter connecting is: 281.95-282.05 mm (11.1004-11.1043 in.).
   [b] The acceptable rod length specification for both 12.7 Liter and 14 Liter connecting rods is: 269.25-269.35 mm (10.6004-10.6043 in.).
   [c] The acceptable rod length specification for Series 60G Engines is: 262.90-263.00 mm (10.3504-10.3543 in.).
   [d] If the connecting rod bore is not to specifications, the rod must be scrapped and cannot be machined.
6. If a new connecting rod is required, stamp the cylinder number on the connecting rod and cap. Refer to section 1.18.3.

1.20.4.2 Inspection of Connecting Rod Bearings and Bearing Bores

Inspect the connecting rod bearing as follows:

CAUTION:

To avoid injury from flying debris when using compressed air, wear adequate eye protection (face shield or safety goggles) and do not exceed 40 psi (276 kPa) air pressure.

1. Check connecting rod bearing wear surfaces for scoring, pitting, flaking, chipping, cracking, loss of overlay, or signs of overheating.
   [a] Overlay plated bearings may develop very small cracks or small isolated cavities ("checking") on the bearing surface during engine operation. These are characteristics of and are NOT detrimental to this type of bearing. The bearings should not be replaced for these minor surface imperfections. The upper bearing shells, which carry most of the load, will normally show signs of distress before the lower bearing shells do. If the overlay is worn through to the copper across the bearing shell, all the bearing shells must be replaced.
   [b] If any of these conditions are detected, replace the bearings.

(Rev. 2004) *All information subject to change without notice.*
6SE483 0401 Copyright © 2004 DETROIT DIESEL CORPORATION

2. Inspect the backs of the connecting rod bearing shells.
   [a] Check for bright spots that indicate shells have been shifting in their bores.
   [b] If bright spots are evident, replace the bearings shells.
3. Inspect the connecting rod bearing bores, if using a service replacement connecting rod, clean rod to remove rust preventative.
   [a] Check large end bore for burrs or foreign particles. If possible use an emery cloth to smooth bore surface, otherwise replace part.

CAUTION:

To avoid injury from flying debris when using compressed air, wear adequate eye protection (face shield or safety goggles) and do not exceed 40 psi (276 kPa) air pressure.

   [b] Blow compressed air through the drilled oil passage to ensure the passage is clean of obstructions. Make sure the split line (cap to rod) is throughly clean.
   [c] On a closed end rod inspect the piston pin bearing for wear, scoring, surface defects (dents scratches) or out of round condition. Refer to section Specifications.
4. Inspect the bearings shells.
   [a] Measure the thickness of the bearing shells, using a micrometer and ball attachment, J 4757. Refer to section 1.18.3. The minimum thickness of a worn standard connecting rod bearing shell should not be less than 3.086 mm (0.1215 in.).
   [b] If either bearing shell is thinner than this dimension, replace both bearing shells.
5. Inspect the bearing shells and the crankshaft journals.
   [a] Check the clearance between the connecting rod bearing shells and the crankshaft journals using a soft plastic measuring strip which is squeezed between the journal and the bearing. Refer to section ADDITIONAL INFORMATION , "Checking Bearing Clearances" in "Shop Notes" section.

 Copyright © 2004 DETROIT DIESEL CORPORATION

[b] If the connecting rod bearing-to-journal clearance exceeds 0.152 mm (0.006 in.) with used parts, replace with a new bearing.

NOTE:
The current bearing shells for 14 L engines and 12.7 L engines for model year 2000 have an oil hole in them to allow oil to flow into the connecting rod.See Figure 1-321

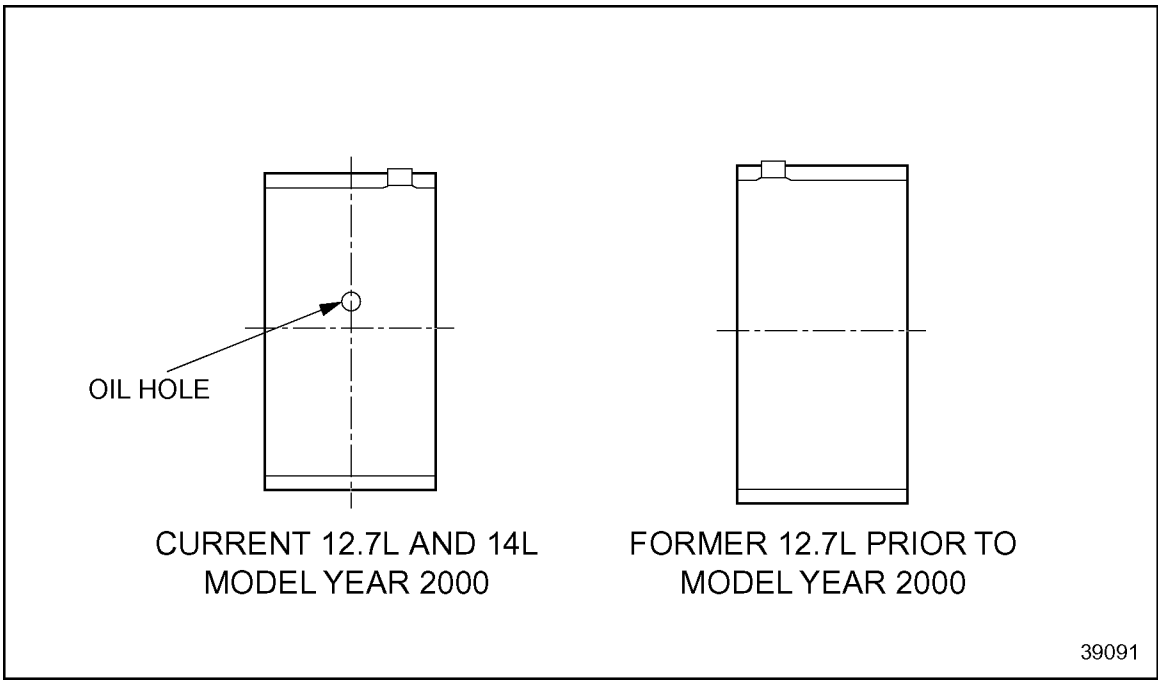

Figure 1-321 Connecting Rod Bearings for 14 L and 12.7 L Engines

NOTE:
Before installing the bearings, inspect the crankshaft journals. Refer to section 1.7.2.4. Do NOT replace one connecting rod bearing shell alone. If one bearing shell requires replacement, install both new upper and lower bearing shells. Also, if a new or reground crankshaft is to be used, install all new bearing shells.

NOTE:
Bearing shells are NOT reworkable from one undersize to another under any circumstances.

Bearing shells are available in 0.254, 0.508 and 0.762 mm (approximately 0.010, 0.020, and 0.030 in.) undersize for service with reground crankshafts. The bearing size specifications are listed in Table 1-24.

(Rev. 2004) *All information subject to change without notice.*
6SE483 0401 Copyright © 2004 DETROIT DIESEL CORPORATION

1.20.5 Installation of Connecting Rod

Refer to section 1.18.5 to install the piston and connecting rod assembly.

 Copyright © 2004 DETROIT DIESEL CORPORATION

1.21 CYLINDER LINER

The cylinder liner is of the replaceable wet type, made of alloy cast iron, and is slip fit in the cylinder block. See Figure 1-322.

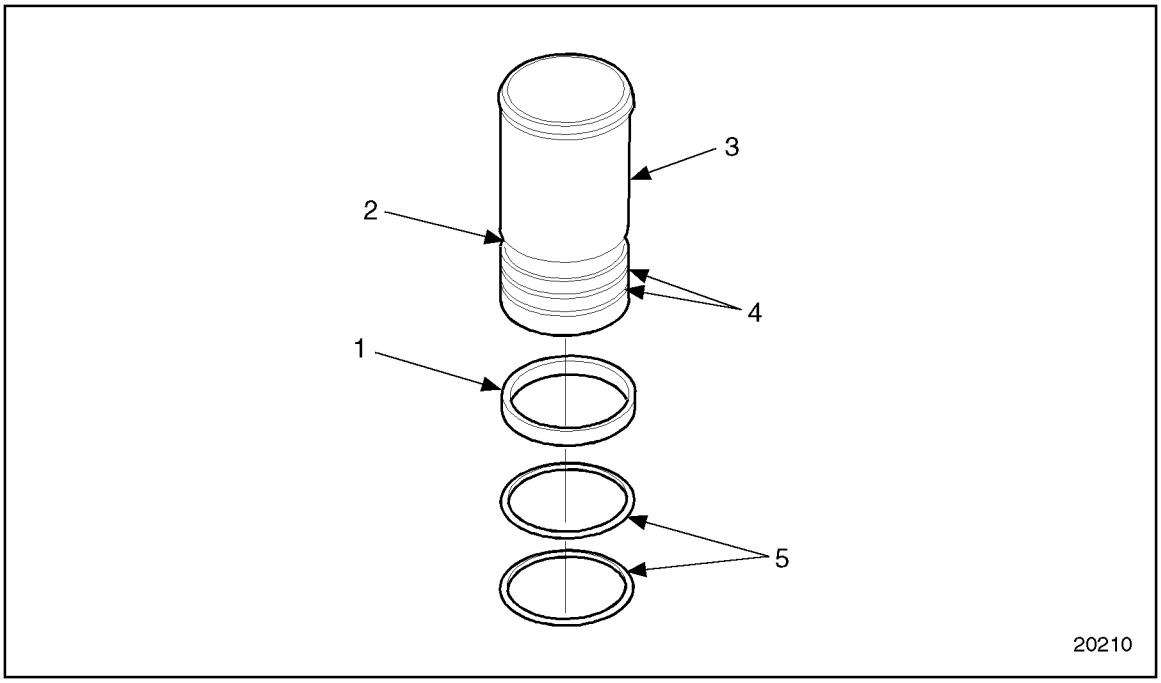

1. Crevice Seal
2. Crevice Seal Groove
3. Cylinder Liner
4. O-ring Grooves
5. D-ring Seals

Figure 1-322 Cylinder Liner and Related Parts

Coolant in the cylinder block water jacket surrounds the liner and cools it directly. A cooling channel is also cut into the liner immediately below the flange. Coolant flow through this channel and around the rest of the liner controls critical ring and liner temperatures for long cylinder component life.

(Rev. 2004) *All information subject to change without notice.*
6SE483 0401 Copyright © 2004 DETROIT DIESEL CORPORATION

The liner is inserted in the cylinder bore from the top of the cylinder block. The flange at the top of the liner fits into a counter bore in the cylinder block. See Figure 1-323.

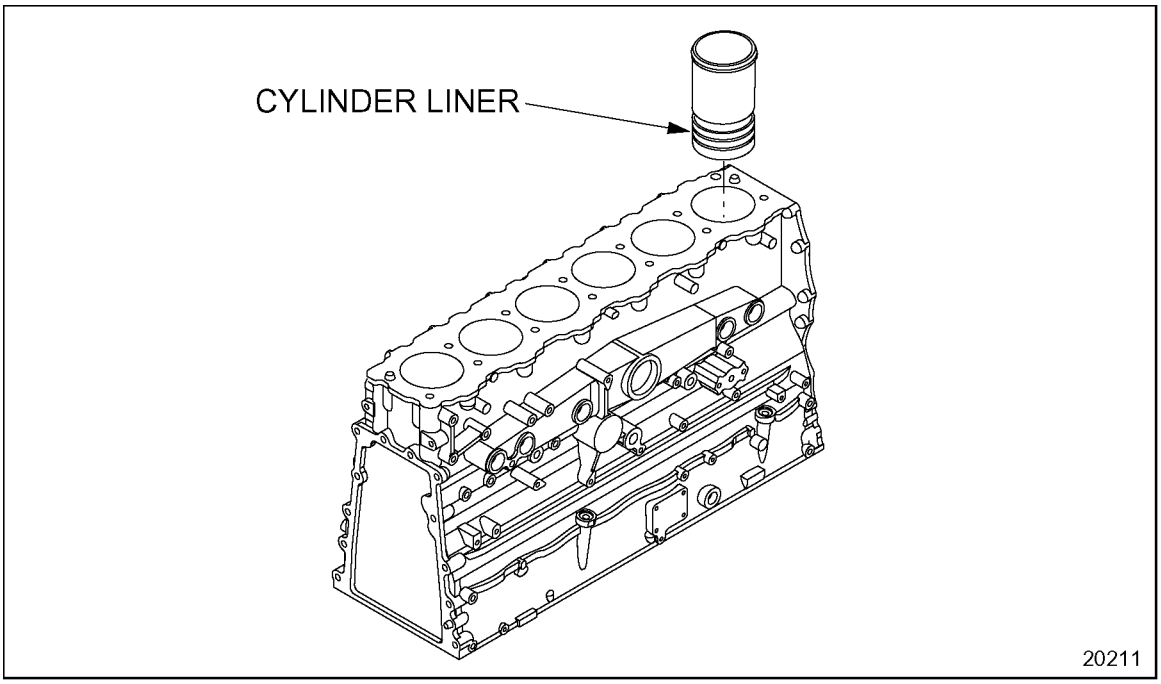

Figure 1-323 Cylinder Liner to Block Positioning

NOTE:
The cylinder liner, piston and connecting rod must be installed as a assembly in 14L engines and 12.7L EGR On-Highway engines. Refer to section 1.19.

 Copyright © 2004 DETROIT DIESEL CORPORATION

NOTICE:
The crevice seal prevents coolant from being pumped in and out of the area adjacent to the liner lower block location which could result in cavitation and corrosion damage to the liner and the block.

A crevice seal, fitting in the wide uppermost groove in the liner helps to stabilize the liner in the cylinder block bore. This system also keeps any debris that is in the cooling system from causing abrasion damage to the upper "D" liner seal ring. See Figure 1-324.

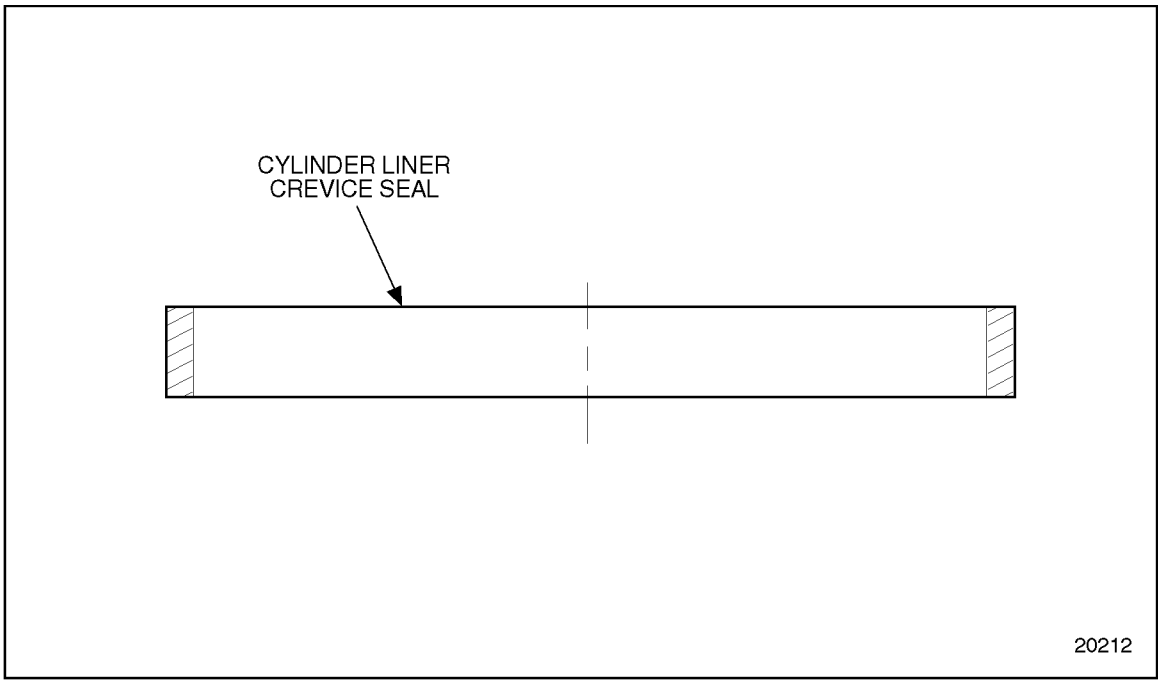

Figure 1-324 Cylinder Liner Crevice Seal Cross-Section

(Rev. 2004) *All information subject to change without notice.*
6SE483 0401 Copyright © 2004 DETROIT DIESEL CORPORATION

Two teflon-coated, D-shaped seal rings, recessed in the lower two grooves in the cylinder liner, are used between the liner and the block to prevent coolant and oil leakage. See Figure 1-325.

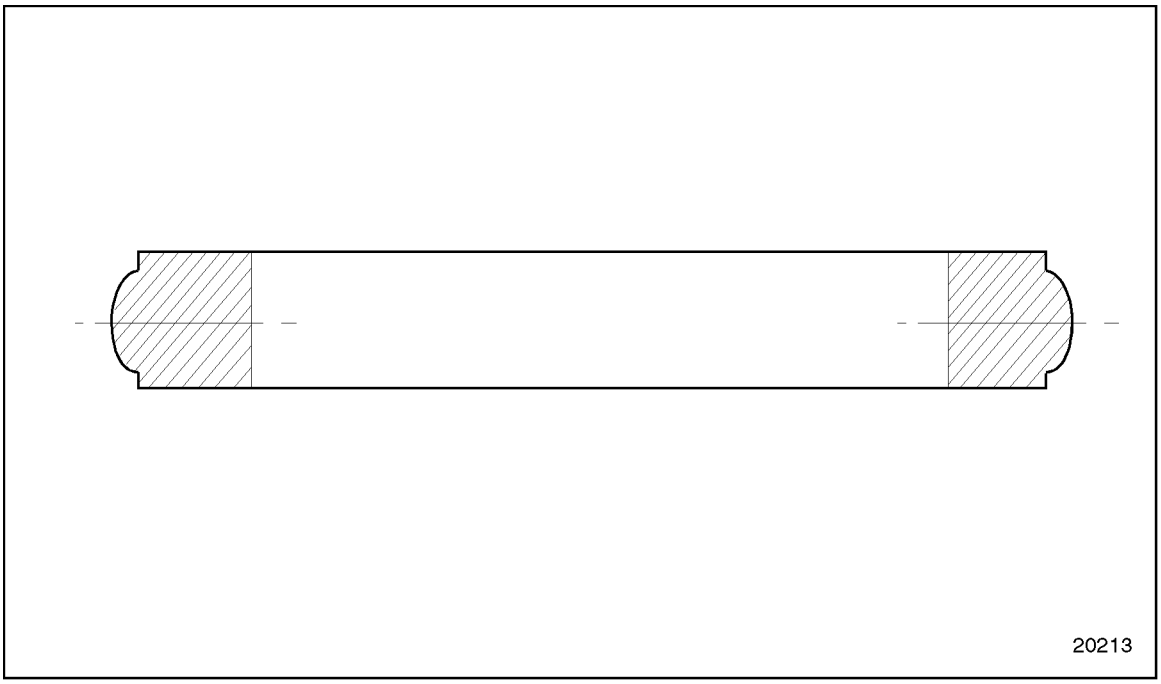

Figure 1-325 Cylinder Liner Seal Ring Cross-section

 Copyright © 2004 DETROIT DIESEL CORPORATION

A weep hole for each cylinder is drilled through the cylinder block exterior, into the cylinder bore area. This weep hole is located between the two D-shaped seal rings. It is used to determine if engine coolant is leaking past the upper liner seal, or if oil is leaking past the lower liner seal. See Figure 1-326. A special rubber plug prevents dirt from getting into the "D" seal ring areas and causing abrasive damage. At the same time it allows leaking oil or coolant a path out of the engine for detection.

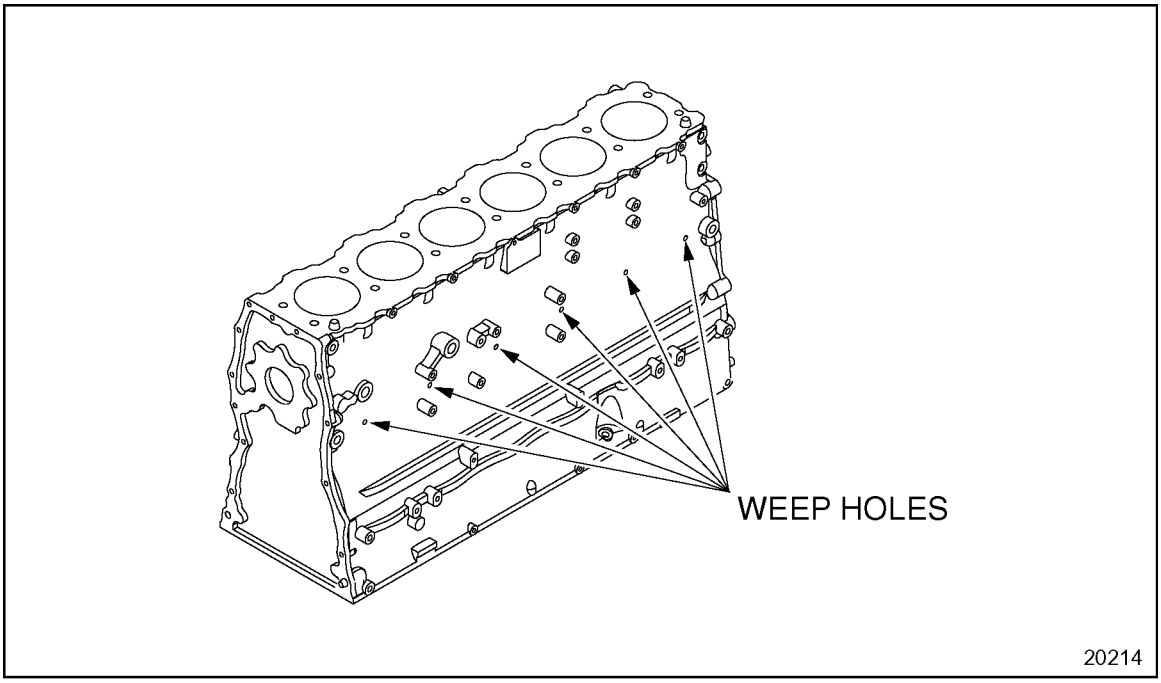

Figure 1-326 Weep Hole Plug Locations

(Rev. 2004) *All information subject to change without notice.*
6SE483 0401 Copyright © 2004 DETROIT DIESEL CORPORATION

1.21.1 Repair or Replacement of Cylinder Liner

To determine if repair is possible or replacement is necessary, perform the following procedure. See Figure 1-327.

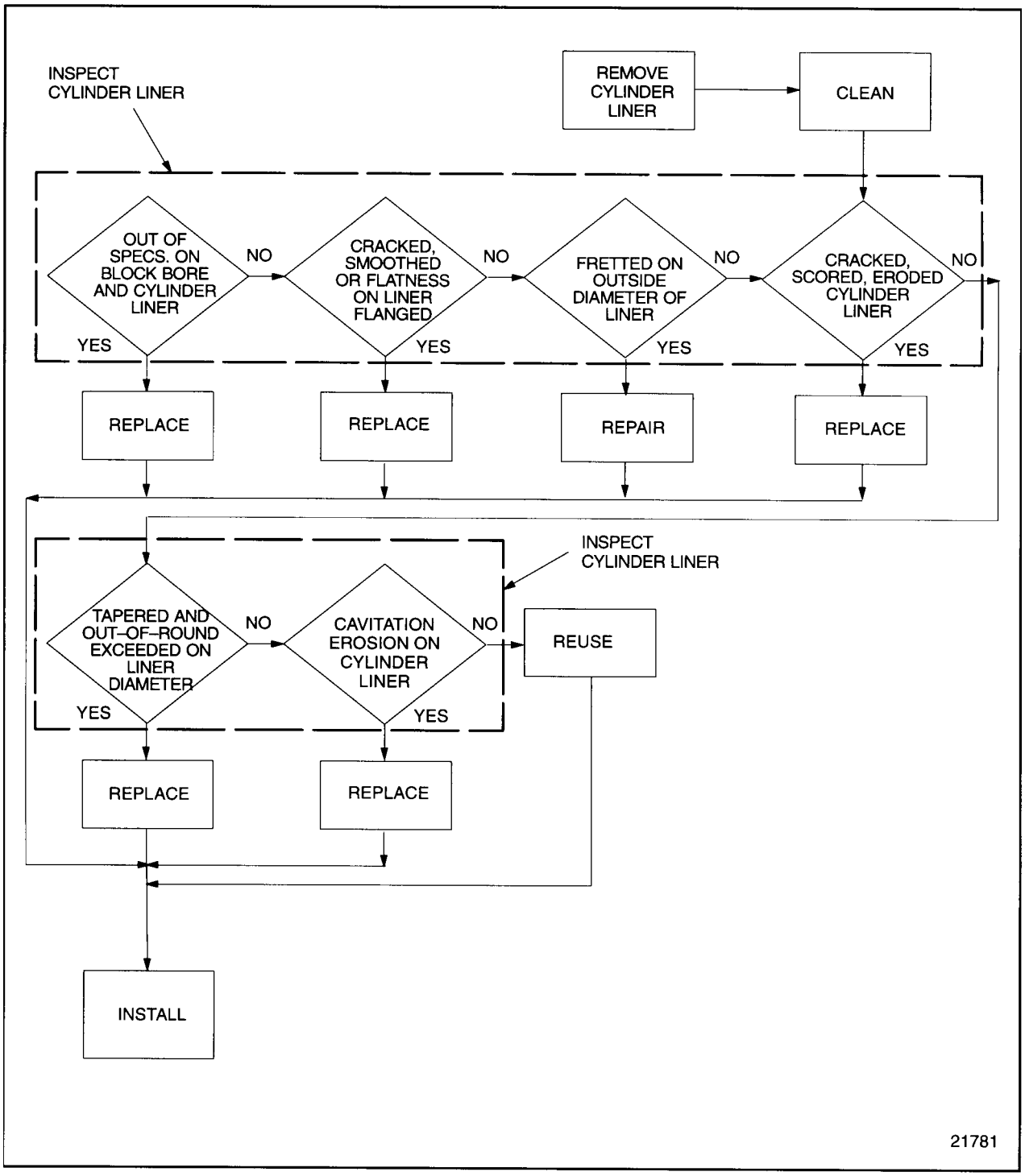

Figure 1-327 Flowchart for Repair or Replacement of Cylinder Liner

 Copyright © 2004 DETROIT DIESEL CORPORATION

1.21.2 Removal and Cleaning of Cylinder Liner

Precleaning is not necessary.

NOTICE:
Refer to Section 1.19.2 for removal of 14L and 12.7L EGR ON-Highway Cylinder Liner, Piston and Connecting Rod assembly.

NOTICE:
The proper method must be followed when removing a cylinder liner. Damage to the liner and the cylinder block may occur if the proper tools and procedures are not used.

1. Remove the piston and connecting rod as an assembly. Refer to section 1.19.2.

(Rev. 2004) *All information subject to change without notice.*
6SE483 0401 Copyright © 2004 DETROIT DIESEL CORPORATION

2. Remove the cylinder liner with cylinder liner remover, J 45876. See Figure 1-328.

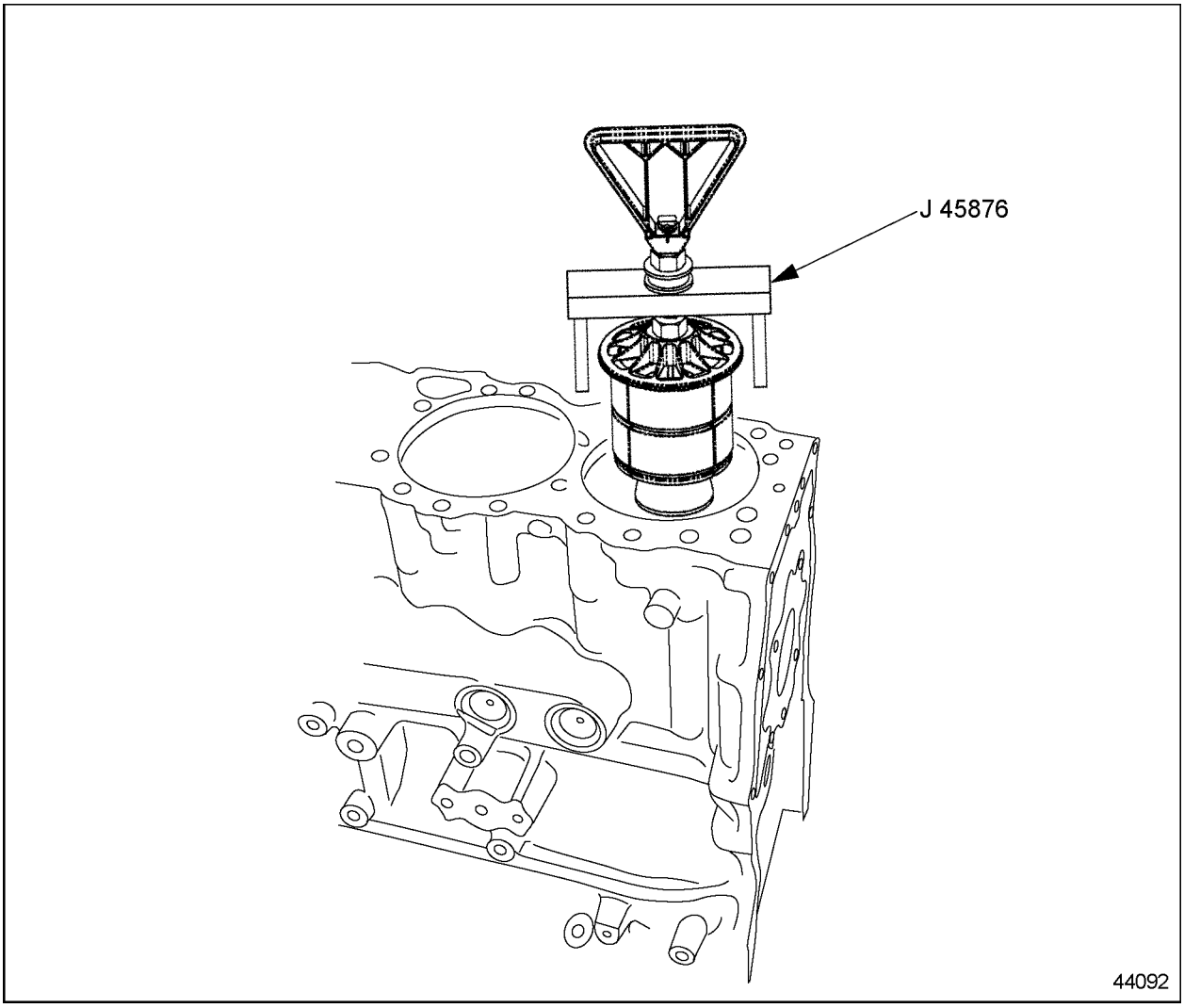

Figure 1-328 Cylinder Liner Removal Tool J 45876

[a] Ease the liner removal tool down into the liner.

[b] Turn the nut on tool J 45876. in a clockwise direction to remove liner from the block.

NOTE:
After removing liners from an engine and prior to installing liners, always store them in an upright position until ready for use. Liners left on their side for any length of time can become egg-shaped and distorted, making installation in cylinder bores difficult or impossible. If the cylinder liners are to be reused, they should be marked for cylinder location and engine orientation, a paint mark can be used to indicate the front of engine so they may be installed to the same cylinder from which they were removed.

[c] Remove the tool from the liner.

 Copyright © 2004 DETROIT DIESEL CORPORATION

[d] Remove the seals (all three) from the liner and discard them.

1.21.2.1 Cleaning of the Cylinder Liner

Clean the cylinder liner prior to inspection as follows:

1. If cleaning a new or used liner, wash the liner with a strong detergent and warm water solution, scrubbing with a non-metallic bristle brush.
2. Rinse with hot water or steam.

CAUTION:

To avoid injury from flying debris when using compressed air, wear adequate eye protection (face shield or safety goggles) and do not exceed 40 psi (276 kPa) air pressure.

3. Dry the liner with compressed air.

NOTICE:

If the liners are not to be installed at this time, oil them lightly with clean engine lubricating oil and store them upright in a clean, dry area. Do not allow the liners to rest on their sides and do not store anything on top of the liners.

4. Coat the bore of the liner with clean engine lubricating oil.
5. Allow the liner to sit for 10 minutes (to allow the oil to work into the surface finish).
6. Wipe the inside of the liner with clean, white paper towels.
7. If a dark residue appears on the towels, repeat the oiling and wiping procedure until residue no longer appears.

1.21.2.2 Inspection of Cylinder Liner

Inspect the cylinder liner as follows:

1. Inspect the cylinder liner.
   [a] Check the cylinder liner for cracks or scoring.
   [b] If any of these are detected, replace with a new part.

(Rev. 2004) *All information subject to change without notice.*
6SE483 0401 Copyright © 2004 DETROIT DIESEL CORPORATION

NOTICE:
Erosion is due to poor cooling system maintenance. If uncorrected, it will eventually make holes through the liner. This can result in combustion gases blowing water out of the radiator, oil in the coolant, or when the engine is stopped will allow water to flow into the cylinder and result in major engine damage due to water in the oil or hydraulic lockup.

[c] Check the cylinder liner for cavitation erosion. See Figure 1-329.

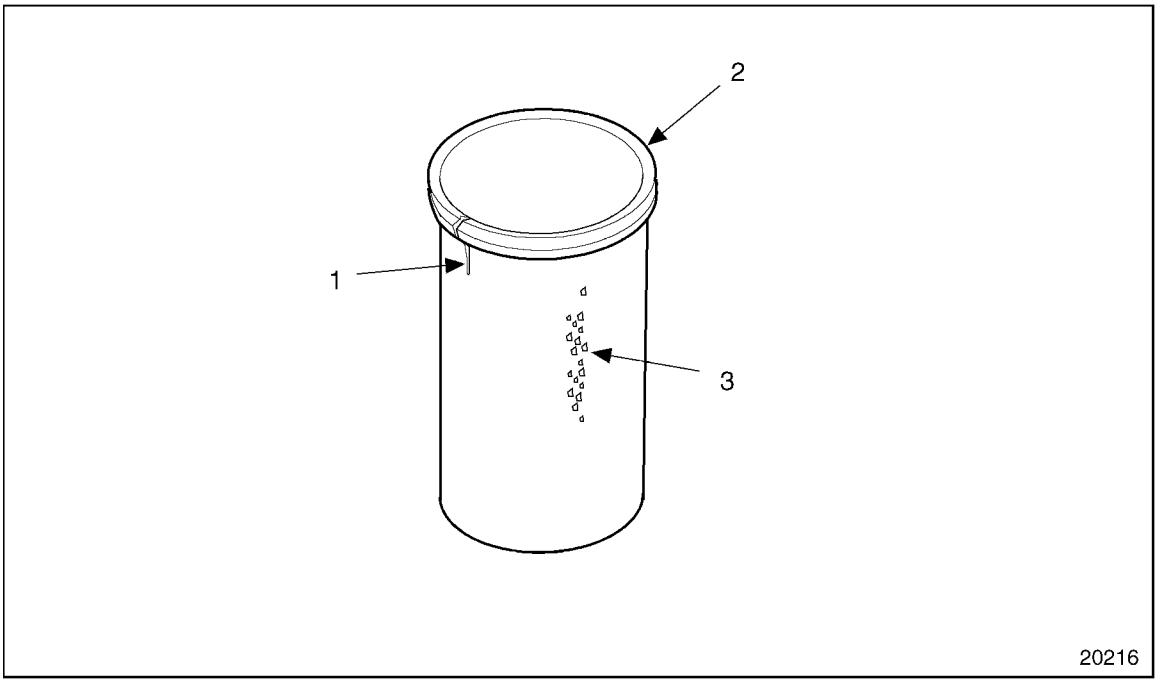

1. Cracks
2. Cylinder Liner
3. Erosion

Figure 1-329 Cylinder Liner Cavitation Erosion

[d] If cavitation erosion occurs, replace with a new part. Refer to section 1.21.3.

NOTICE:
Series 60 cylinder liners are honed at the factory with a process that cannot be duplicated in the field. For this reason, honing of used liners should not be attempted.

2. Inspect the outside diameter of the liner.

[a] Check liner for fretting.

[b] If any fretting is found, remove it from the surface of the liner with a coarse, flat stone.

 Copyright © 2004 DETROIT DIESEL CORPORATION

3. Inspect the liner flange.
   [a] Check the liner flange for cracks, smoothness and flatness on both the top and bottom surfaces.
   [b] If these are detected, replace with a new part.
4. Inspect the block bore and cylinder liner.
   [a] Measure the block bore and the outside diameter of the liner. The liner specifications are listed in Table 1-18. The block specifications are listed in Table 1-17. Refer to section 1.1.3.3 for procedures.
   [b] If the liner does not meet specification, replace with a new part.

(Rev. 2004) *All information subject to change without notice.*
6SE483 0401 Copyright © 2004 DETROIT DIESEL CORPORATION

5. Inspect inside diameter of cylinder liners.

   [a] Set the cylinder bore gage on zero in master setting fixture. Use cylinder bore gage, J 5347-B, to measure the inside diameter of the liner of various points. The maximum diameter of a used liner is 130.100 mm (5.122 in.) for 12.7 and 11.1 L and 133.100 mm (5.244 in.) for 14L at any measurement location. See Figure 1-330. Also check the liner for taper and out-of-round.

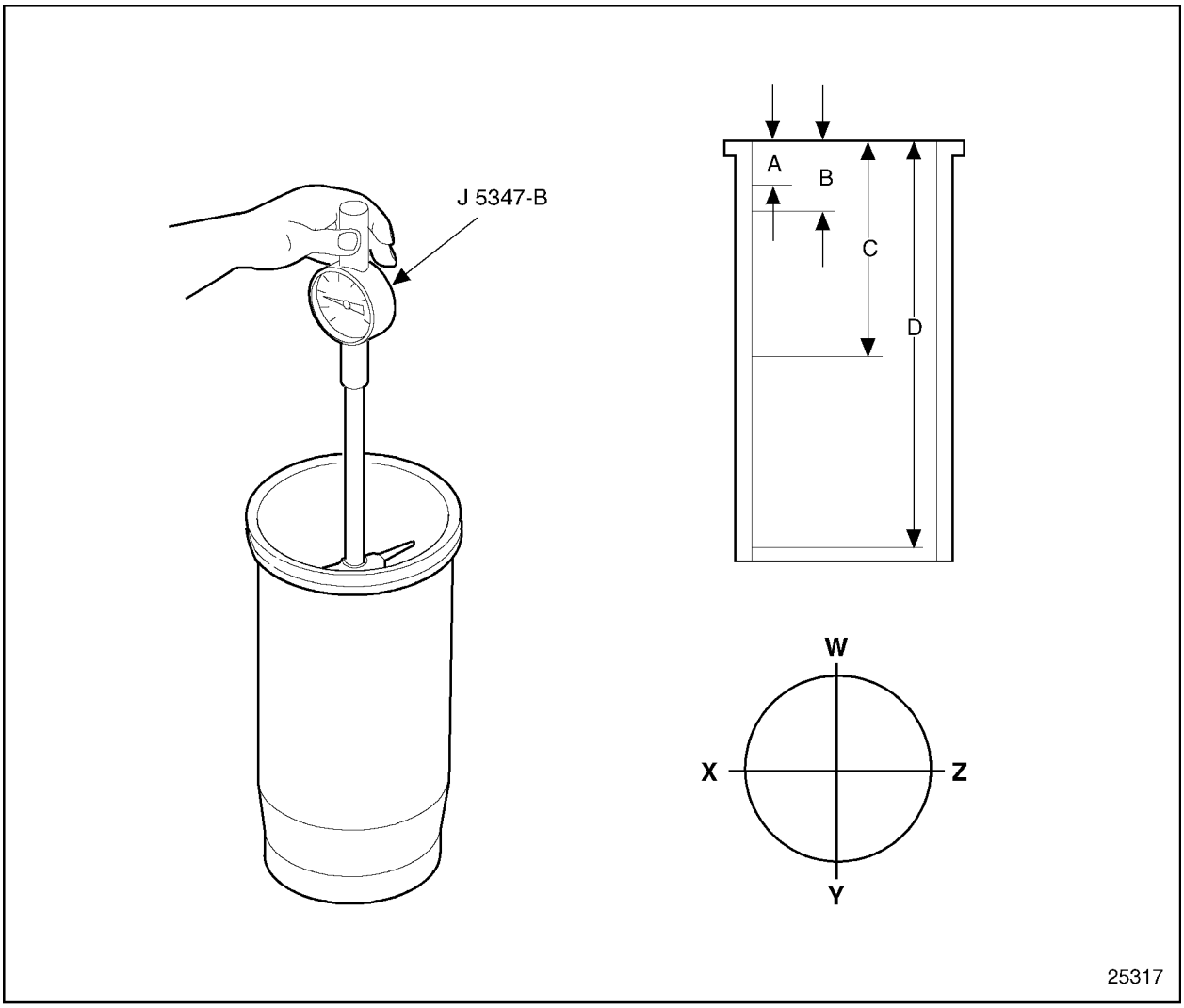

Figure 1-330 Cylinder Liner Measurement Diagram

   [b] If the taper and out-of-round exceed 0.025 mm (0.001 in.), replace with a new part.

6. Inspect the cylinder liner.

   [a] Check the seal ring and crevice seal grooves for burrs or sharp edges.

   [b] If any are detected, smooth with an emery cloth.

 Copyright © 2004 DETROIT DIESEL CORPORATION

1.21.3 Installation of Cylinder Liner

Install the cylinder liner as follows:

NOTE:
Refer to section 1.19 for 14L and 12.7L EGR On-Highway liner, piston and connecting rod procedure.

1. Wipe the inside and outside of the liner clean. Be sure the block bore and counter bore are clean, so the liner flange will seat properly. The block counter bore depth must be 8.9255-8.9662 mm (0.3514 -0.3530 in.) and must not vary more than 0.04 mm (0.0015 in.) in depth around the circumference. No two adjacent block counter bores may range in depth more than 0.025 mm (0.001 in.) when gaged along the longitudinal cylinder block centerline. Specifications are listed in Table 1-17, and listed in Table 1-18.

NOTE:
Thoroughly clean the cylinder block liner counter bores to remove any foreign material. Foreign material in the cylinder liner counter bores can cause the liner to seat improperly.

2. Lubricate the seal rings and crevice seal with clean petroleum jelly.
3. Install two new seal rings and a new crevice seal into their respective grooves in the liner.
4. Insert the cylinder liner into the cylinder bore.

NOTE:
Do not exert excessive force on the liner, while pushing it down.

(Rev. 2004) *All information subject to change without notice.*
6SE483 0401 Copyright © 2004 DETROIT DIESEL CORPORATION

5. Install J 35597-A, over the liner to be installed. See Figure 1-331.

NOTE:
It is necessary to leave the cylinder liner installation tool in place until after the liner protrusion is measured.

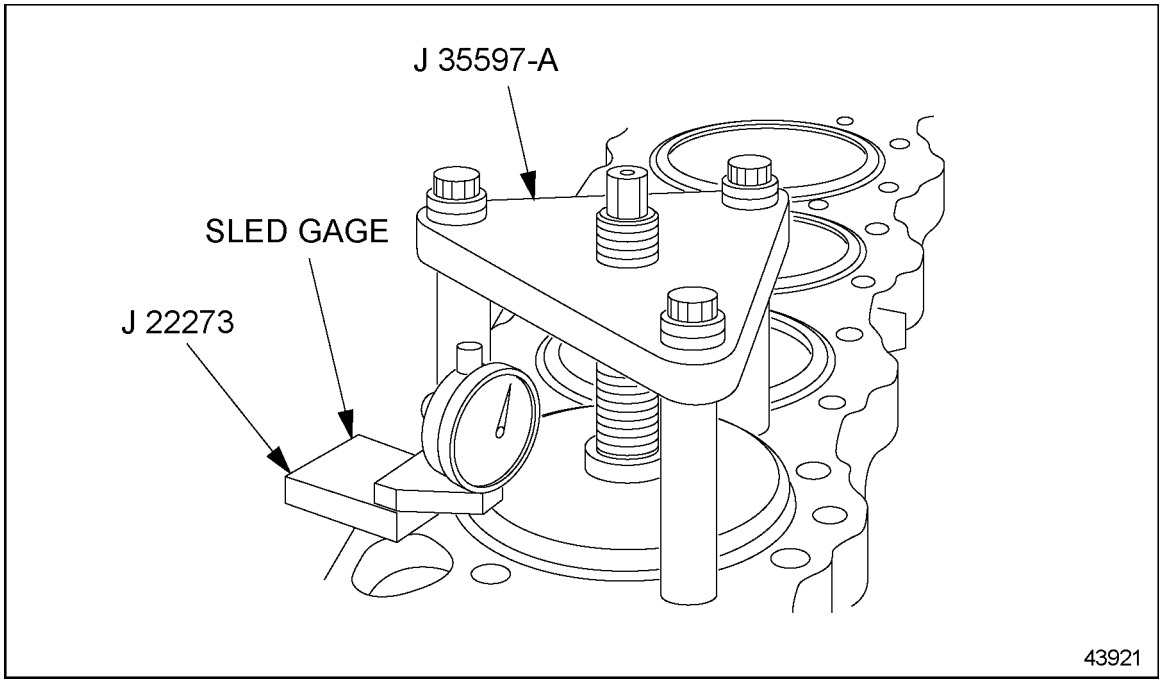

Figure 1-331 Cylinder Liner Installation Tools

6. Thread three cylinder head bolts through the tool and into a head bolt hole, so that the round shoe of the tool is centered over the liner.
7. Tighten the bolts.

NOTE:
It is not necessary to torque the bolts.

8. Turn the threaded center bolt in a clockwise direction. As the round shoe of the tool reaches the liner, ensure that the shoe is properly positioned into the cylinder liner.
9. Continue turning the bolt until the liner bottoms in the cylinder counterbore. Apply a tightening torque of 60 N·m (44 lb·ft) to the installation tool center bolt.
10. Install a dial indicator sled gage. See Figure 1-311.

 Copyright © 2004 DETROIT DIESEL CORPORATION

11. Measure the distance from the top of the liner flange to the top of the block. See Figure 1-332

    [a] Allowable liner protrusion is -0.0127-0.0762 mm (-0.0005-0.003 in.) with no more than 0.0508 mm (0.002 in.) variation between any two adjacent cylinders. Specifications are listed in Table 1-18.

    [b] If the liner protrusion exceeds the maximum allowable, remove the liner and check for debris under the liner flange.

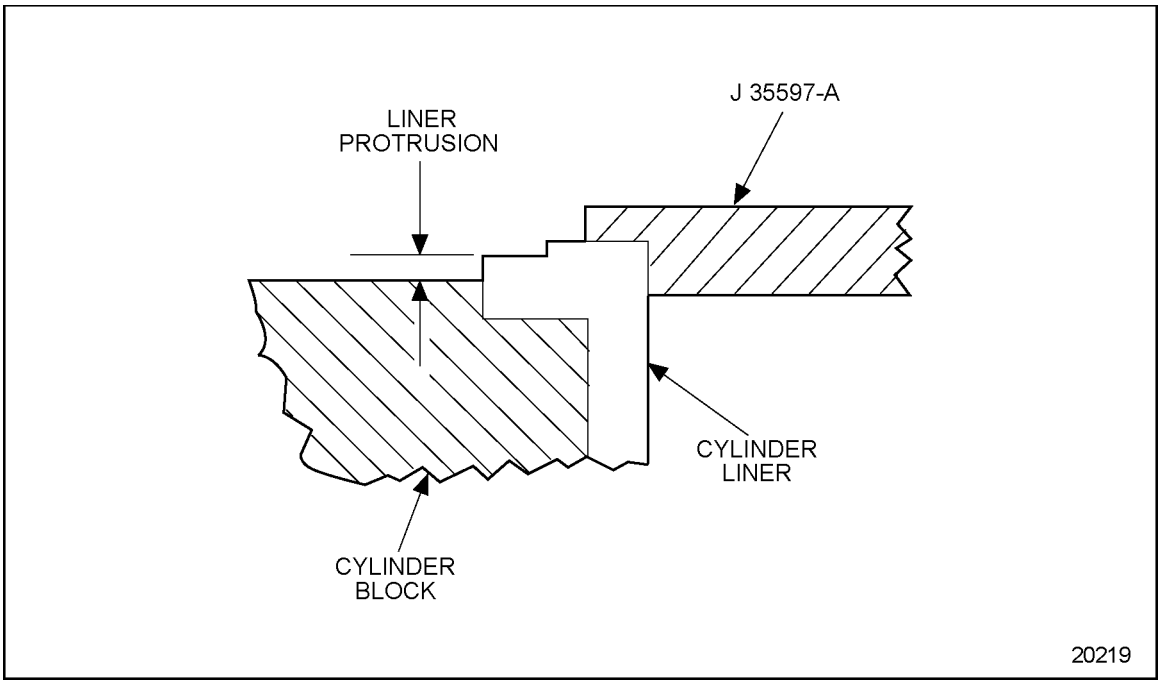

Figure 1-332 Cylinder Liner Protrusion

12. Remove the cylinder liner tool.
13. With all of the cylinder liners installed and the liner protrusion measurements within specifications, install the piston and connecting rod assemblies. Refer to section 1.19.5.

(Rev. 2004) *All information subject to change without notice.*
6SE483 0401 Copyright © 2004 DETROIT DIESEL CORPORATION

1.22 GEAR TRAIN AND ENGINE TIMING

The gear train is completely enclosed between the gear case and gear case cover and is located at the front of the engine. The gear train consists of a camshaft drive gear, camshaft idler gear, fuel pump drive gear, air compressor and power steering pump drive gear, bull gear, oil pump drive gear, crankshaft timing gear, water pump drive gear, accessory pulley drive gear, and adjustable idler gear. The gear ratio of each gear in relationship to the crankshaft timing gear is shown directly below the gear title. See Figure 1-333.

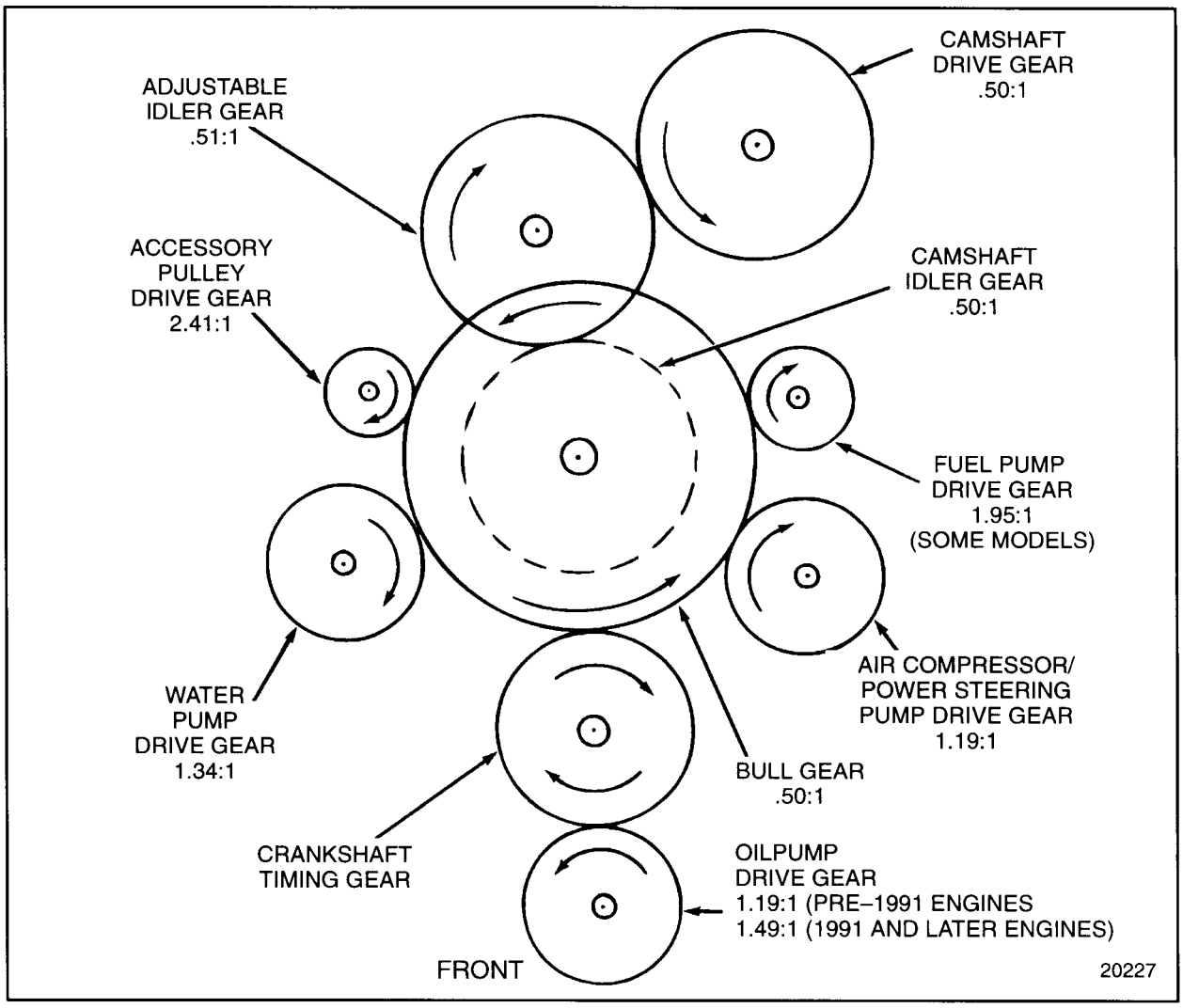

Figure 1-333 Engine Gear Train

The crankshaft timing gear, pressed onto the front end of the crankshaft, directly drives the bull gear and oil pump drive gear, and indirectly (through the bull gear), drives the fuel pump drive gear, air compressor and power steering pump drive gear, accessory pulley drive gear and water pump drive gear.

 Copyright © 2004 DETROIT DIESEL CORPORATION

The camshaft idler gear is mounted to the rear of the bull gear on the same carrier, and rotates along with the bull gear at the same speed. This camshaft idler gear drives the adjustable idler gear, which in turn, drives the camshaft drive gear. See Figure 1-334.

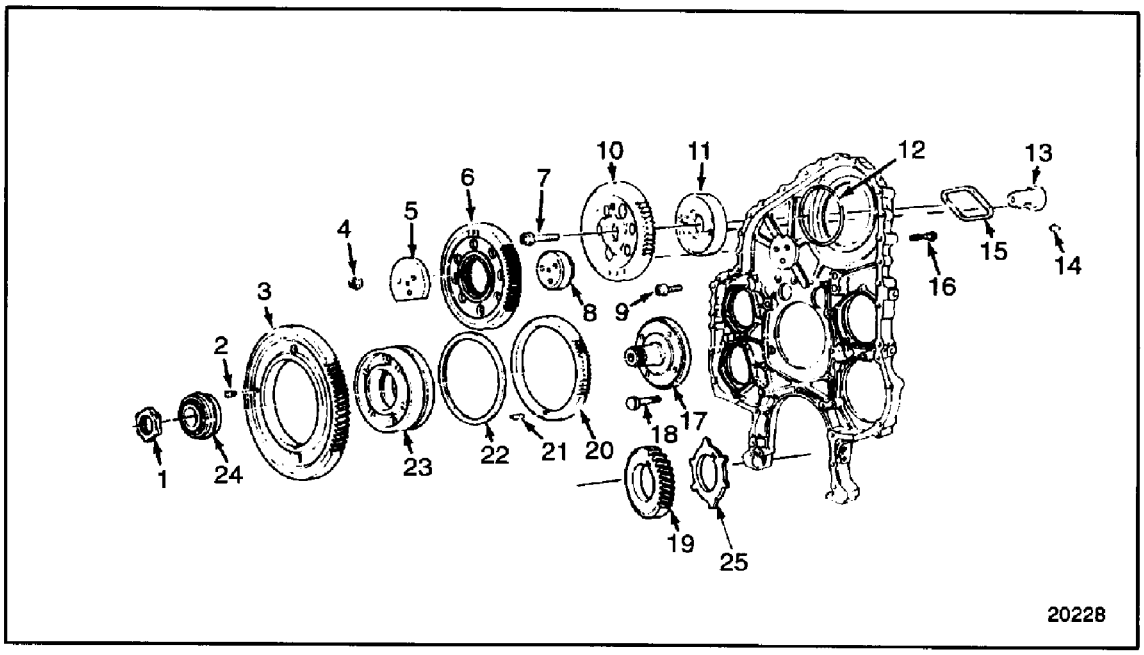

1. Bull Gear Retaining Nut
2. Timing Pin
3. Bull Gear
4. Adjustable Idler Gear Retaining (3) Locknut
5. Adjustable Idler Gear Plate
6. Adjustable Idler Gear
7. Camshaft Retaining Bolt
8. Adjustable Idler Gear Hub
9. Thrust Plate Retaining (2) Bolt
10. Camshaft Drive Gear
11. Camshaft Thrust Plate
12. Camshaft Thrust Plate Seal O-ring
13. Camshaft Drive Gear Hub
14. Camshaft Drive Gear Hub Key
15. Camshaft Thrust Plate Seal
16. Adjustable Idler Gear Hub Retaining Stud
17. Bull Gear and Idler Gear Hub
18. Bull Gear Hub Retaining (4) Bolt
19. Crankshaft Timing Gear
20. Camshaft Idler Gear
21. Bull Gear and Idler Gear Key
22. Spacer
23. Bull Gear and Idler Gear Carrier
24. Bull Gear and Idler Gear Bearings
25. Crankshaft Timing Rings

Figure 1-334 Gear Train and Related Parts

The bull gear and camshaft idler gear are a press-fit to the bull gear and camshaft idler gear carrier. Both gears are keyed to the carrier by the same key. The carrier is supported by two tapered roller bearings, which ride on a hub bolted to the engine block by four bolts. The bull gear and camshaft idler gear assembly is retained to the hub by a **left-hand threaded nut**.

(Rev. 2004) *All information subject to change without notice.*
6SE483 0401 Copyright © 2004 DETROIT DIESEL CORPORATION

The camshaft idler gear drives the camshaft drive gear through an adjustable idler gear. The adjustable idler gear is supported by a bushing and is mounted on an adjustable hub secured by three studs pressed into the gear case from the rear.

The camshaft must be in time with the crankshaft timing gear. Since there are three gears between them, timing marks have been stamped or etched on the face of the gears to facilitate correct gear train timing. See Figure 1-335.

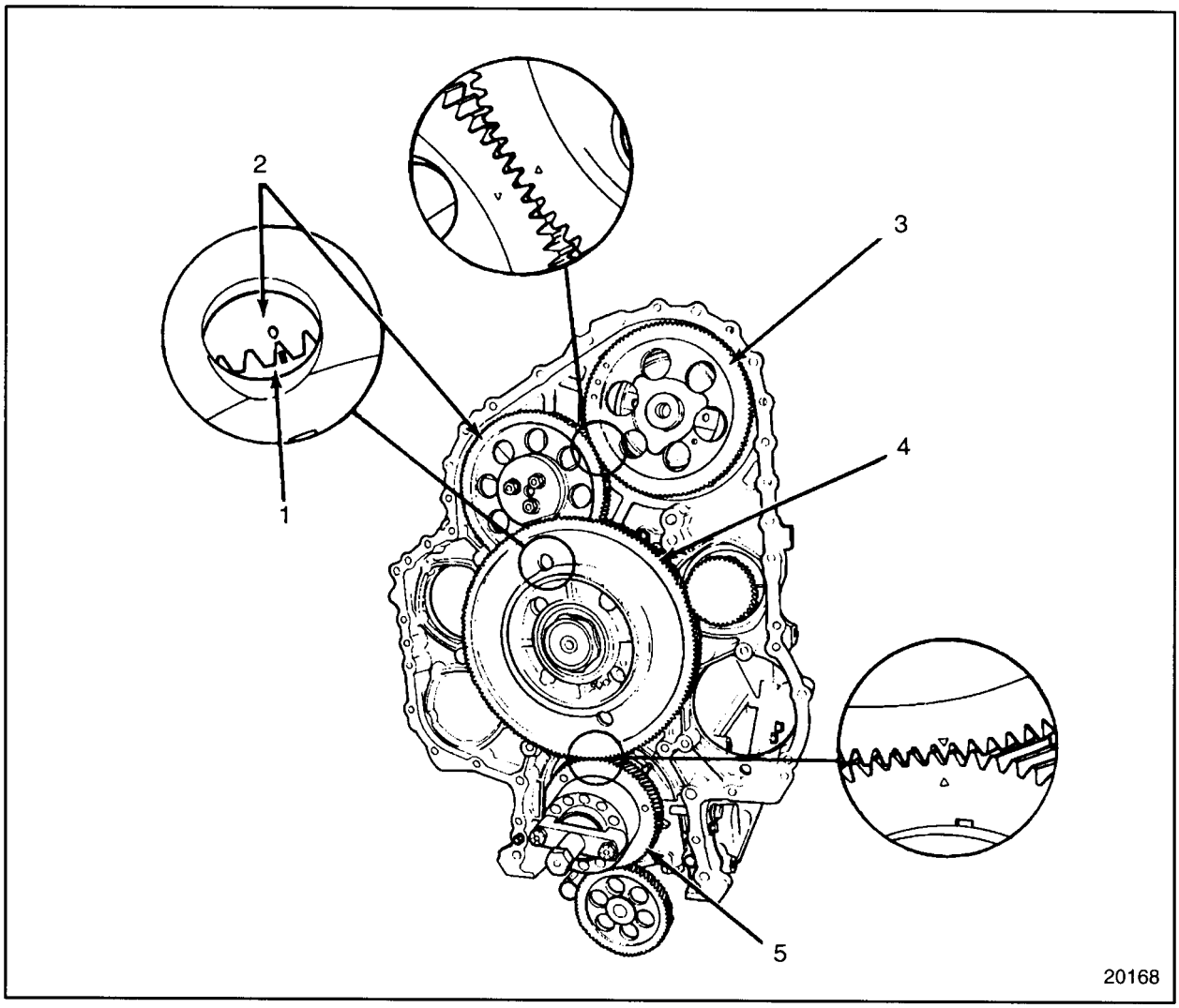

1. Camshaft Idler Gear
2. Adjustable Idler Gear
3. Camshaft Drive Gear
4. Bull Gear
5. Crankshaft Timing Gear

Figure 1-335 Engine Gear Train and Timing Marks

 Copyright © 2004 DETROIT DIESEL CORPORATION

The symbol system of marking the gears makes gear train timing a comparatively easy operation. When assembling the engine, work from the crankshaft timing gear to the camshaft drive gear and line up the appropriate symbols on the gears as each gear assembly is installed on the engine.

There are no timing marks on the drive gears for the fuel pump, air compressor and power steering pump, water pump or accessory drive pulley. Therefore, it is not necessary to align these gears in any particular position during their installation.

The backlash between the various mating gears in the gear train should be 0.051 - 0.229 mm (0.002 - 0.009 in.) and should not exceed 0.305 mm (0.012 in.) backlash between worn gears.

Gear train noise is usually an indication of excessive gear lash, chipped, pitted or burred gear teeth or excessive bearing wear. Therefore, when noise develops in a gear train, the gear case cover should be removed and the gear train and its bearings inspected. A rattling noise usually indicates excessive gear lash whereas a whining noise indicates too little gear lash.

The gear train is lubricated by oil splash. The bull gear and camshaft idler gear are pressure-fed lubricating oil through two holes in the bull gear recess area of the engine block. See Figure 1-336.

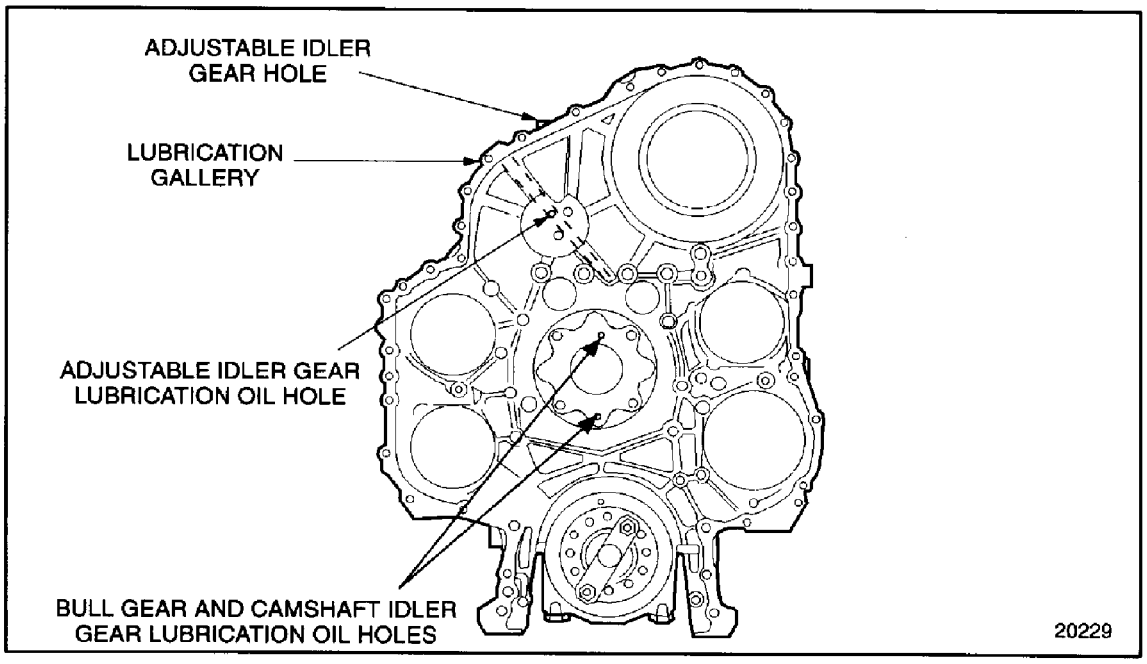

Figure 1-336 Gear Train Lubricating Oil Hole Locations

(Rev. 2004) *All information subject to change without notice.*
6SE483 0401 Copyright © 2004 DETROIT DIESEL CORPORATION

These two holes are connected to the main oil gallery. The adjustable idler gear assembly is pressure-fed by an oil gallery in the gear case that indexes with a hole in the engine block. The hole in the engine block is connected to the main oil gallery.

The correct relationship between the crankshaft and the camshaft must be maintained to properly control the opening and closing of the intake and exhaust valves, and the operation of the fuel injectors and to help maintain engine balance.

The crankshaft and camshaft gears can only be mounted in one position as they are both keyed to their mating parts. Therefore, when the engine is properly timed, the timing marks on the various gears will match. See Figure 1-335.

An "out of time" engine may result in valve-to-piston dome contact, a no-start condition or loss of power.

1.22.1 Repair or Replacement of Gear Train and Engine Timing

To determine if repair is possible or replacement is necessary, perform the following procedure. See Figure 1-337.

 Copyright © 2004 DETROIT DIESEL CORPORATION

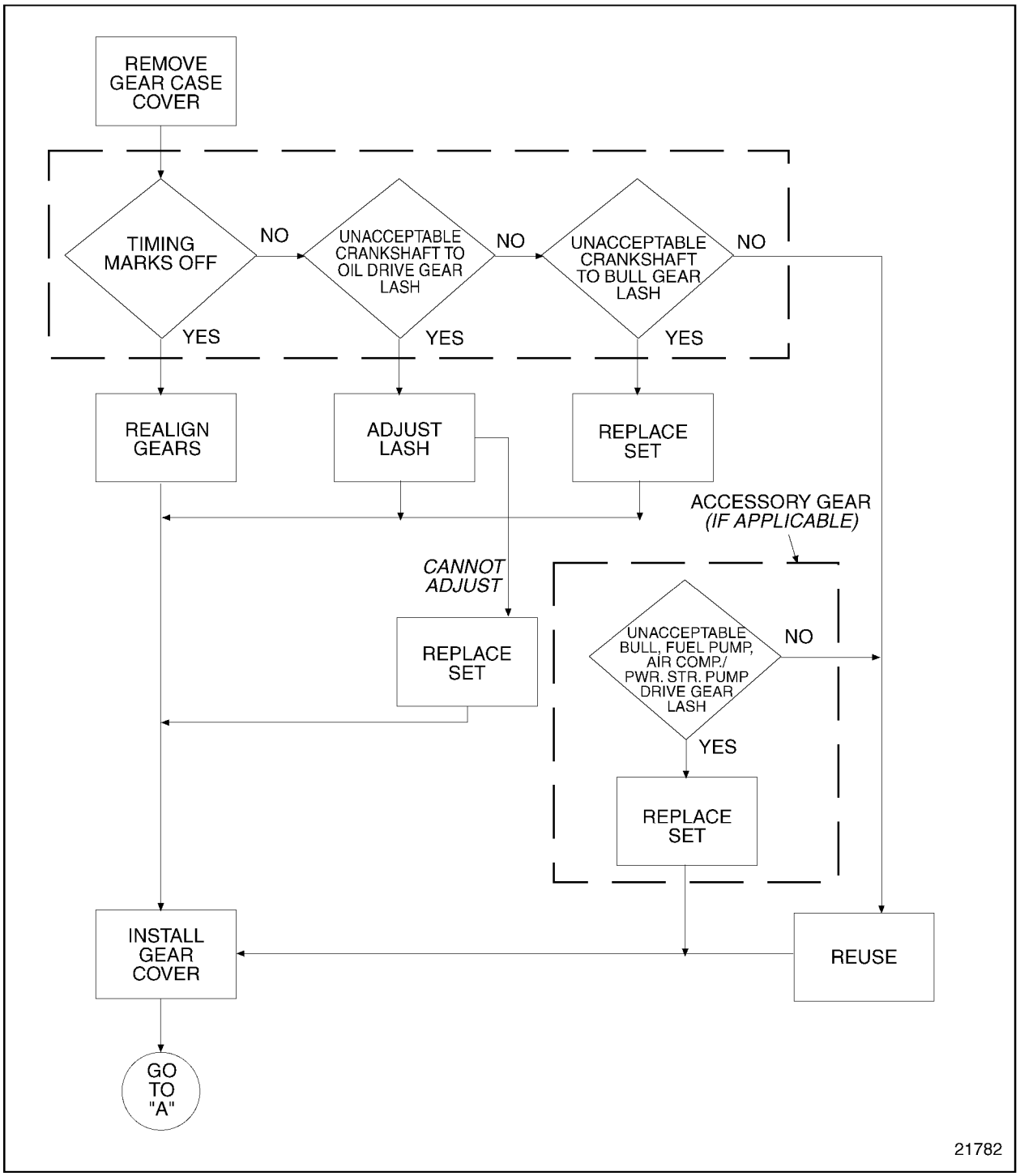

Go to "A", see Figure 1-338.

Figure 1-337 Flowchart for Repair or Replacement of Gear Train and Engine Timing - Part 1 of 3

(Rev. 2004) *All information subject to change without notice.*
6SE483 0401 Copyright © 2004 DETROIT DIESEL CORPORATION

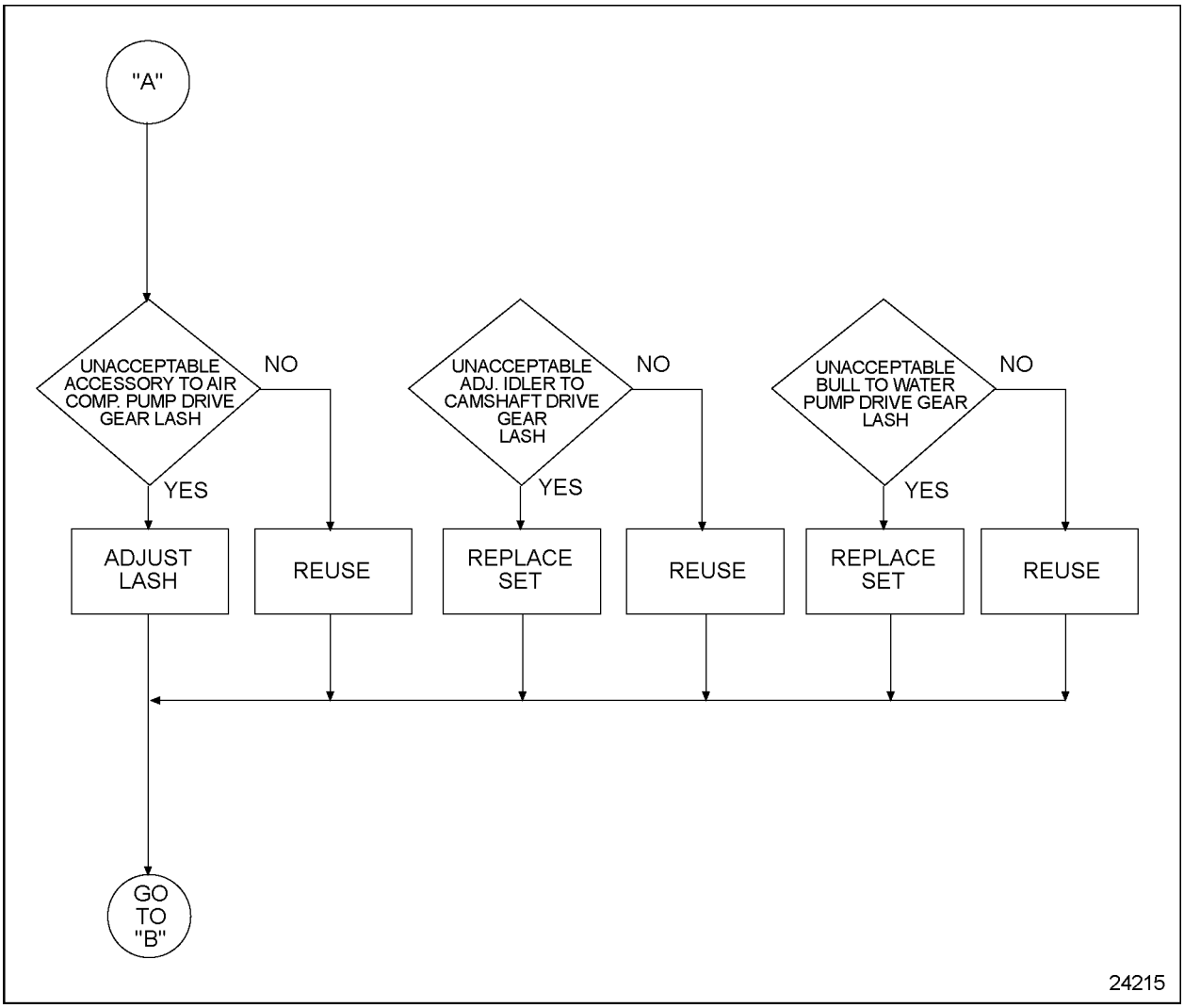

Go to "B", see Figure 1-339.

Figure 1-338 Flowchart for Repair or Replacement of Gear Train and Engine Timing - Part 2 of 3

 Copyright © 2004 DETROIT DIESEL CORPORATION

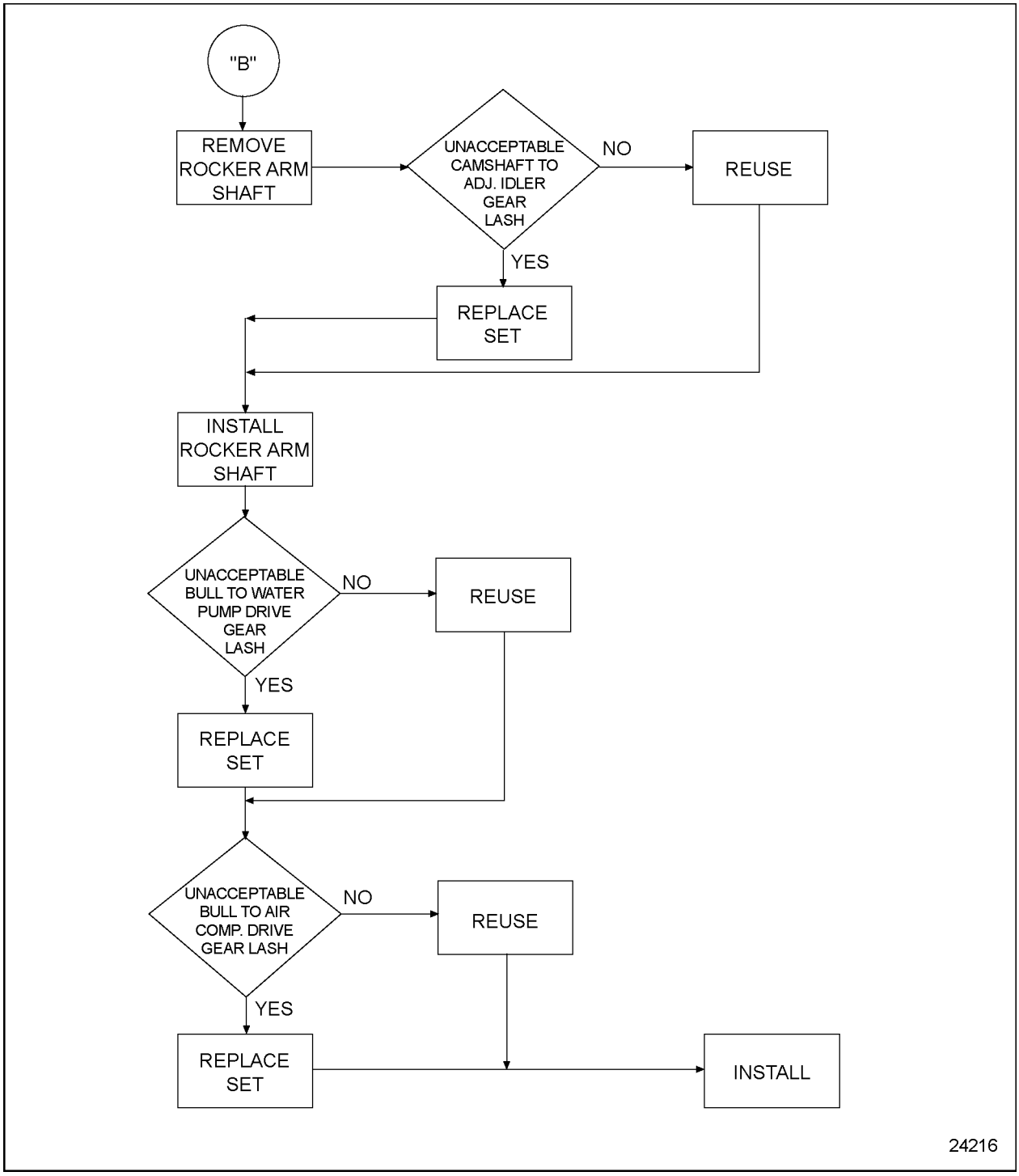

Figure 1-339 Flowchart for Repair or Replacement of Gear Train and Engine Timing - Part 3 of 3

(Rev. 2004) *All information subject to change without notice.*
6SE483 0401 Copyright © 2004 DETROIT DIESEL CORPORATION

1.22.2 Cleaning of Gear Train and Engine Timing

When an engine is out of time, the camshaft timing can be checked by following the camshaft timing check procedure. Refer to section 1.24.6.1. If the engine is out of time, a visual inspection of the gear train is required. Refer to section 1.10.2and perform all of the steps under "Removal of Gear Case Cover" **.**

1.22.2.1 Check Engine Timing

Gear train noise is usually an indication of excessive gear lash, chipped, pitted or burred gear teeth, or excessive bearing wear. Therefore, when noise develops in a gear train, the gear case cover should be removed and the gear train and its bearings inspected. A rattling noise usually indicates excessive gear lash. A whining noise indicates too little gear lash.

1. Check engine timing as follows:

   [a] Examine all timing marks to ensure they are aligned. See Figure 1-335.

   [b] It may be necessary to remove the gears to align the timing marks. Refer to section 1.27.2.

NOTE:
The gear ratio between the adjustable idler gear and the camshaft drive gear causes a "hunting-tooth" situation. Therefore, the bull gear and rocker arm assemblies should be removed to align the timing marks. See Figure 1-335.

   [c] If any gears are removed or installed, or if lash between any two gears is out of specification, check the lash between the mating gears.

 Copyright © 2004 DETROIT DIESEL CORPORATION

2. Check the crankshaft timing gear-to-oil pump idler gear lash measurement as follows:

   [a] Fasten a dial indicator and magnetic base to the cylinder block so that the stem of the dial indicator rests on a tooth of the oil pump drive gear. See Figure 1-340.

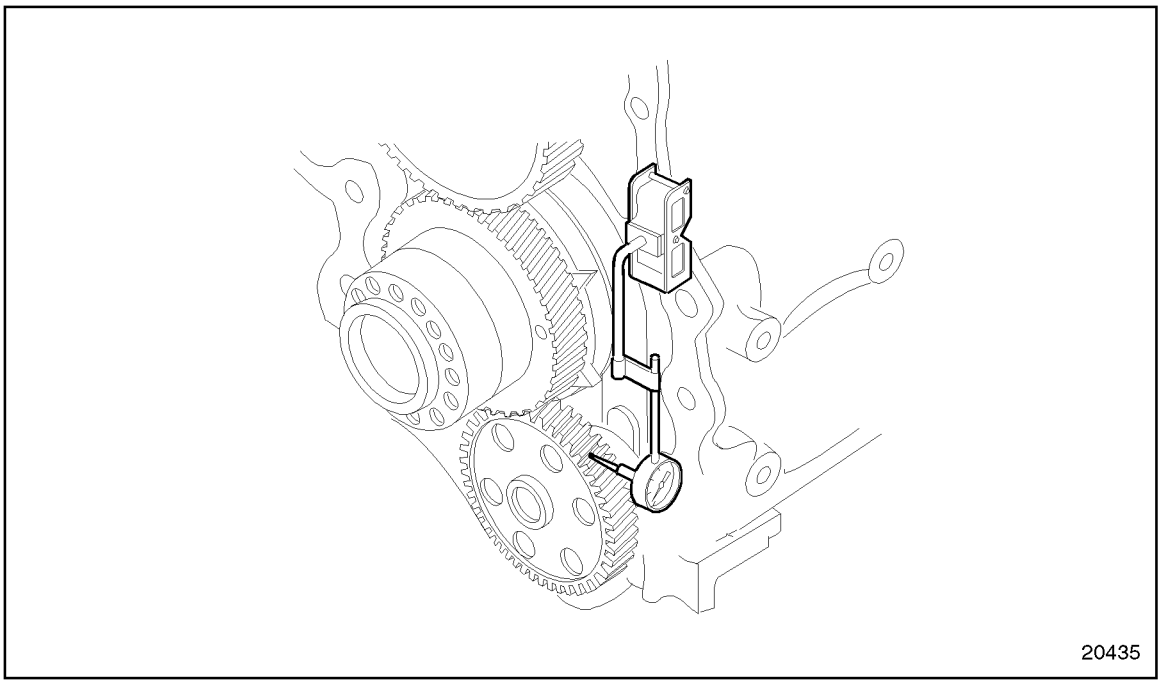

Figure 1-340 Crankshaft Timing Gear-to-Oil Pump Idler Gear Lash Measurement

NOTE:
The oil pump design changed effective with 1991 model year engines. However, the oil pump gear lash measurement procedure is the same for both style pumps.

   [b] Hold the crankshaft timing gear stationary, and rotate the oil pump drive gear in one direction, as far as it will go, without moving the crankshaft timing gear.

   [c] Zero the dial indicator.

   [d] Move the oil pump drive gear in the opposite direction, as far as it will go, without moving the crankshaft timing gear.

   [e] Read and record the total gear lash.

NOTE:
The gear lash must be checked in four positions 90 degrees apart.

NOTE:
The lash between the crankshaft timing gear and oil pump drive gear must be measured with the engine in a running position. See Figure 1-340.

(Rev. 2004) *All information subject to change without notice.*
6SE483 0401 Copyright © 2004 DETROIT DIESEL CORPORATION

Proper lash between the crankshaft timing gear and oil pump drive gear is 0.051-0.229 mm (0.002 -0.009 in.).

The gear lash between the crankshaft timing gear and the oil pump drive gear can be adjusted utilizing shims inserted between the oil pump body and the cylinder block. See Figure 1-341.

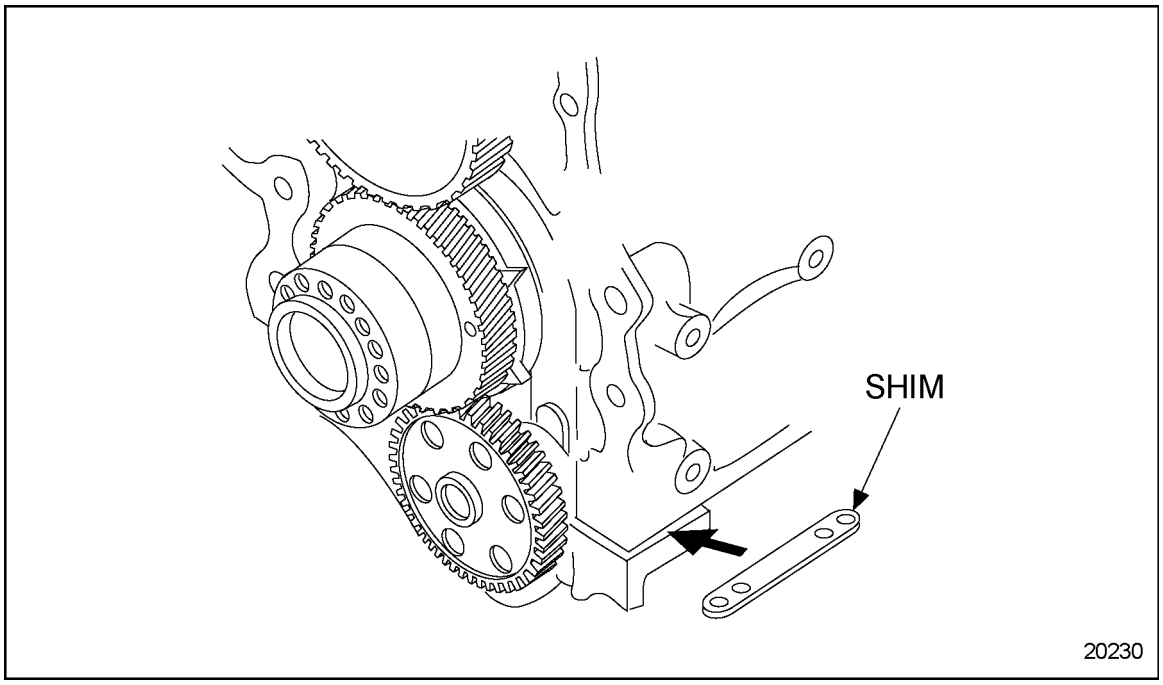

Figure 1-341 Lubricating Oil Pump Shim Installation

[f] Remove or install shims as necessary to obtain the proper gear lash clearance.

NOTE:
When adjusting for gear tooth lash by installing or removing shims, the same number of shims must be changed under each foot so that the pump will always be level on the engine block. The insertion or removal of one 0.127 mm (0.005 in.) shim will change the gear tooth lash by approximately 0.102 mm (0.004 in.).

NOTE:
If it is necessary to remove the oil pump, refer to section 3.2.2.

[g] If the use of shims cannot bring gear lash within acceptable limits, the gear or gears for that gear set must be replaced.

 Copyright © 2004 DETROIT DIESEL CORPORATION

3. Check the crankshaft timing gear-to-bull gear lash measurement as follows:

   [a] Install a dial indicator and magnetic base. See Figure 1-342.

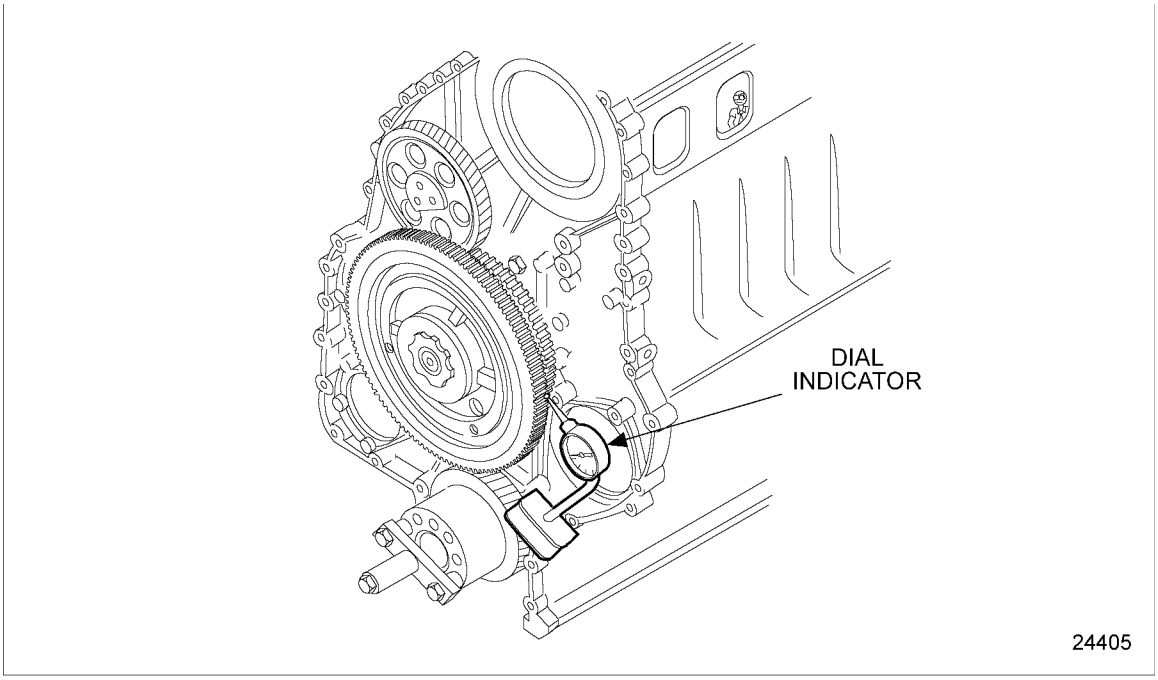

Figure 1-342 Crankshaft Timing Gear-to-Bull Gear Lash Measurement

   [b] Adjust the stem of the dial indicator to rest on the center of a tooth on the bull gear.

   [c] Preload the bull gear.

   [d] Zero the dial indicator pointer.

   [e] Hold the crankshaft timing gear stationary with one hand. Rotate the bull gear and check the total gear lash in four positions of crank gear, approximately 90 degrees apart.

   [f] Although gear lash for the remaining gear sets is not adjustable, the lash must still be measured. Lash specifications is 0.051-0.229 mm (0.002 -0.009 in.) for new parts and a maximum of 0.305 mm (0.012 in.) for used parts.

   [g] If lash measurement is exceeded, replace gear with a new part.

(Rev. 2004) *All information subject to change without notice.*
6SE483 0401 Copyright © 2004 DETROIT DIESEL CORPORATION

4. The procedure for measuring the lash between the bull gear and the fuel pump drive gear (if applicable) and the air compressor and power steering pump drive gear is similar to the steps just mentioned. Refer to step 3 and perform step 3[a], as the first step and refer to step 3[g], as the final step. Gear case cover must be installed to continue on checking the engine timing. Refer to section 1.10.3and perform all of the steps under gear case cover installation.

NOTE:
Due to the possibility of damaging the crankshaft front oil seal, whenever the gear case cover is removed, the front crankshaft oil seal must be replaced. Replace the crankshaft front oil seal after the gear case cover is installed. Refer to section 1.8.1.

5. The procedure for measuring the lash between the accessory drive gear and air compressor pump drive gear (on vehicle without power steering) is similar to the steps just mentioned. Refer to step 3and perform step 3[a], as the first step and refer to step 3[g], as the final step.

NOTE:
Lash can be measured with the gear case cover installed. Access covers are provided for checking the lash between these gears and the bull gear. For engines with no access cover for accessory drive, gear lash is to be measured off the accessory drive pulley.

6. The procedure for measuring the lash between the adjustable idler gear and camshaft drive gear is similar to the steps just mentioned. Refer to step 3 and perform step 3[a], as the first step and refer to step 3[g], as the final step.

NOTE:
These gears are measured and adjusted with the gear case cover installed.

7. The procedure for measuring the lash between the bull gear and the water pump drive gear is similar to the steps just mentioned. Refer to step 3 and perform step 3[a], as the first step and refer to step 3[g], as the final step.

NOTE:
These gears can be measured with the pump installed.

 Copyright © 2004 DETROIT DIESEL CORPORATION

NOTICE
For engines equipped with the compact gear train assembly go to step 9 for measuring and adjusting gear lash procedures.

8. When measuring or adjusting the gear lash between the adjustable idler gear and the camshaft drive gear, the valve and injector spring pressures must be removed from the camshaft lobes. Use the following procedure for this adjustment:

NOTE:
The front and rear rocker shafts look identical, but must not be interchanged due to different oil passage patterns. The outboard ends of the rocker arm shafts are marked for identification with the DDC logo. See Figure 1-343. Use care to ensure that the rocker arm shaft assemblies are replaced exactly as removed.

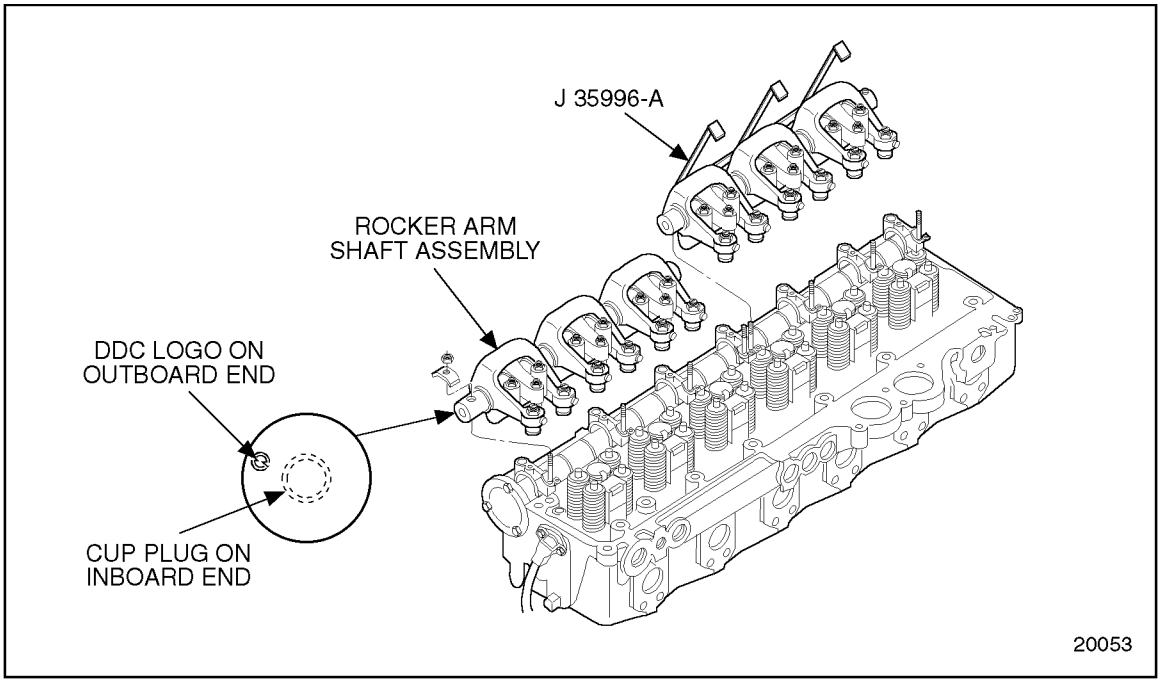

Figure 1-343 Rocker Arm Shaft Identification Mark

(Rev. 2004) *All information subject to change without notice.*
6SE483 0401 Copyright © 2004 DETROIT DIESEL CORPORATION

[a] Install the gear lash pedestal, J 35596-15, into the threaded hole of the camshaft drive gear. See Figure 1-344. Bar the engine over until the tool is at the three o'clock position.

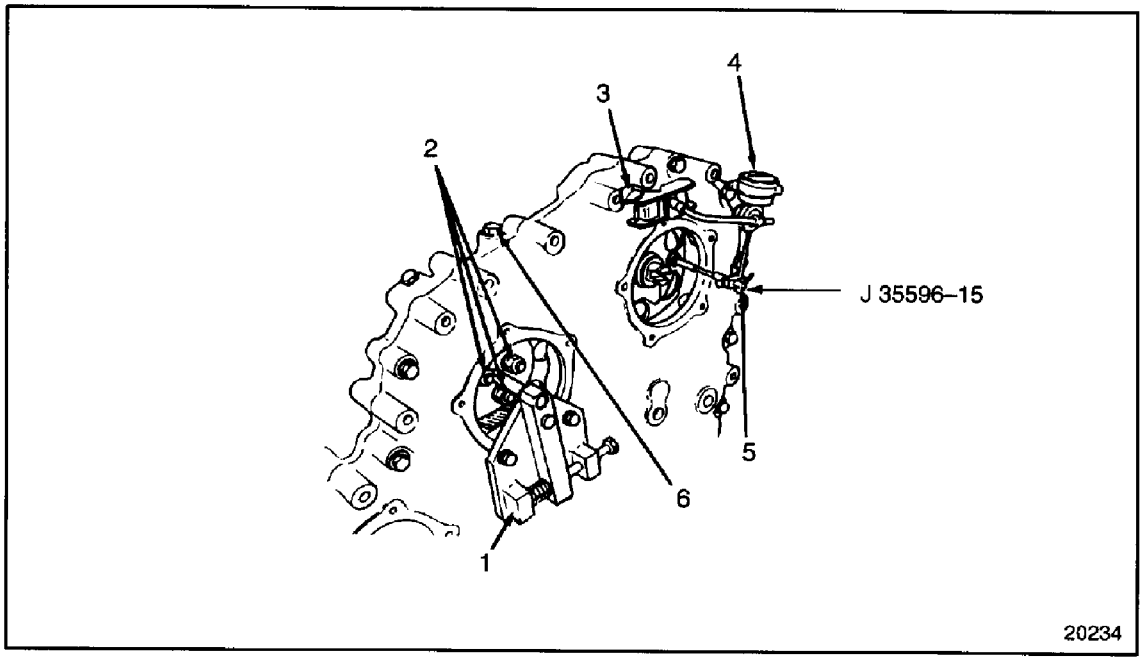

1. Gear Lash Adjustment Tool
2. Adjustable Idler Gear Retaining Nut
3. Magnetic Base
4. Dial Indicator
5. Pedistal Idler Gear Hole
6. Adjustable Idler Gear Retaining Nut

Figure 1-344 Camshaft Drive Gear-to-Adjustable Idler Gear Lash Measurement

NOTE:
Since the teeth of the camshaft drive gear are not accessible with the gear case cover installed, the lash is measured on the pedestal installed in the threaded hole, which is located exactly half-way between the center and edge of the camshaft drive gear. For this reason, the reading obtained will be exactly 1/2 of the actual gear lash.

[b] Mount a dial indicator adaptor and dial indicator. See Figure 1-344.

[c] Adjust the stem of the dial indicator to rest on the flat of the pedestal.

[d] If the adjustable idler gear has been removed, torque the three flanged nuts that retain the adjustable idler gear hub to the gear case to 57-67 N·m (42-49 lb·ft) to seat the assembly before proceeding.

[e] Loosen the three locknuts that retain the adjustable idler gear hub to the gear case until they are hand tight.

[f] Insert the dowel portion of the gear lash adjusting tool, J 35596, through the hole in the adjustable idler gear retaining plate and into the adjustable idler gear hub, using the bottom two adjustable idler gear cover bolt holes. See Figure 1-344.

 Copyright © 2004 DETROIT DIESEL CORPORATION

[g] Turn the adjusting screw of the tool in a clockwise direction to force the adjustable idler gear against the camshaft drive gear, until there is zero lash between the two gears. See Figure 1-345.

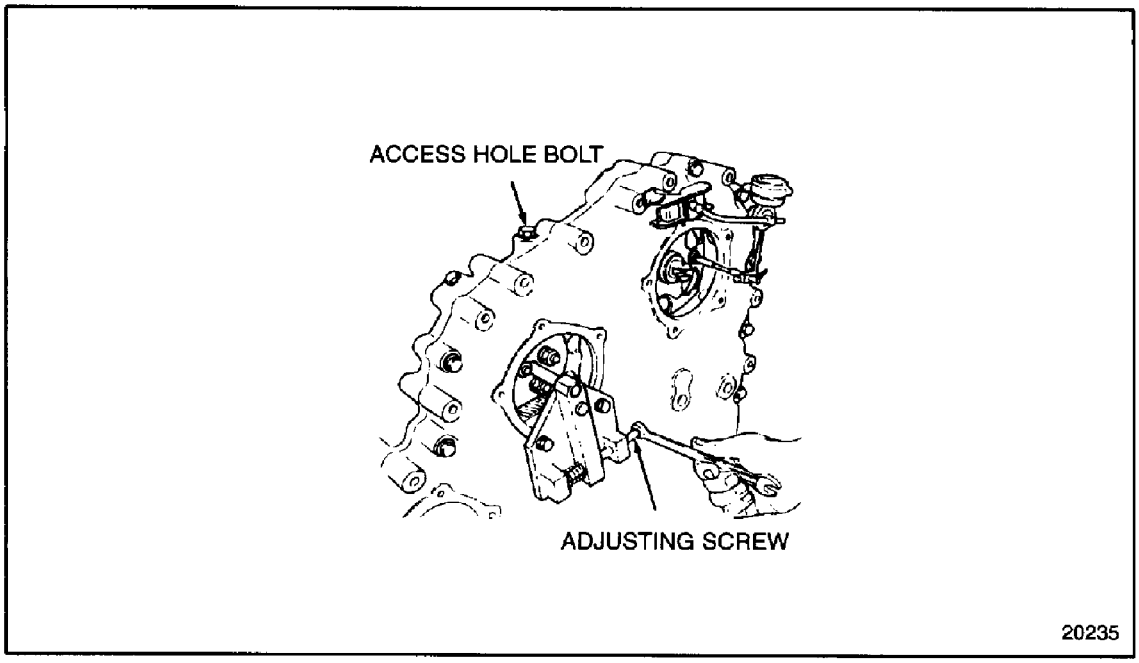

Figure 1-345 Adjustable Idler Gear-to-Camshaft Drive Gear Lash Adjustment

[h] Zero the dial indicator.

[i] Hold the adjustable idler gear by inserting a screwdriver through the hole provided in the gear case. Engage one of the adjustable idler gear teeth and apply pressure on the screwdriver to move the gear in a counterclockwise direction. This will prevent the gear from moving.

[j] Attempt to turn the camshaft drive gear, and watch the dial indicator pointer.

NOTE:
If there is zero lash between the two gears, the dial indicator pointer will not move from zero.

[k] Turn the adjusting screw of the gear lash adjusting tool, J 35596, approximately 1-1/2 turns or until the proper gear lash is obtained.

(Rev. 2004) *All information subject to change without notice.*
6SE483 0401 Copyright © 2004 DETROIT DIESEL CORPORATION

[l] When checking gear lash, hold the adjustable idler gear stationary . Refer to step 8[i] as the first step and refer to step 8[j]as the final step, and rotate the camshaft drive gear with your right hand. See Figure 1-346.

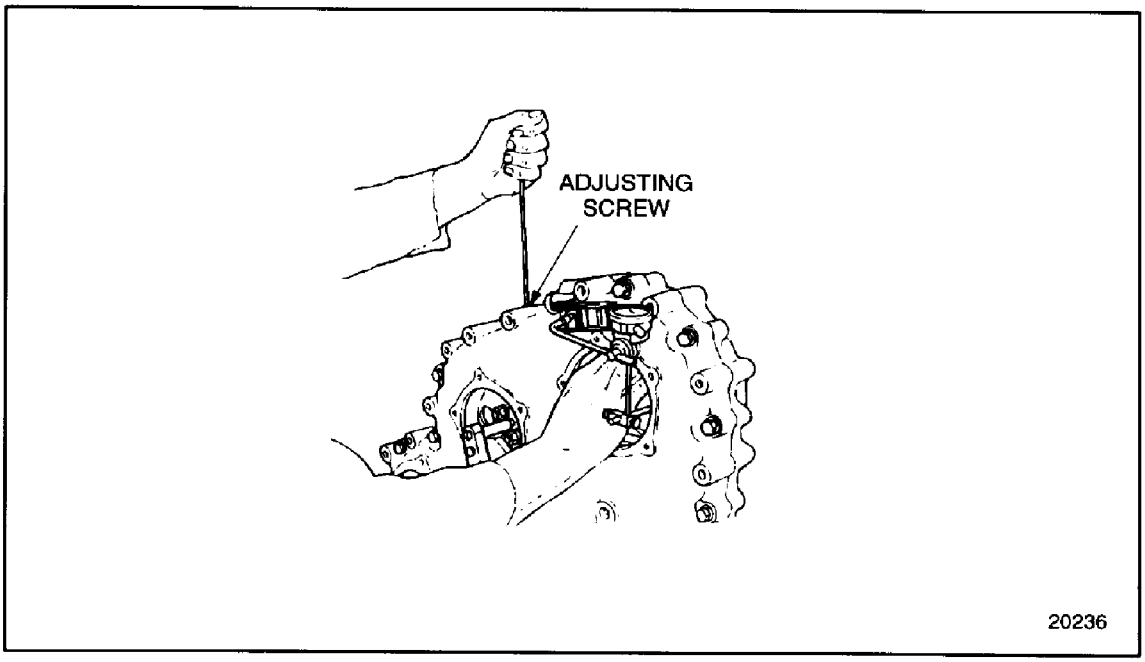

Figure 1-346 Checking Adjustable Idler Gear-to-Camshaft Drive Gear Lash

NOTE:
Remember to multiply the reading obtained by two to get the actual lash measurement. The specification of gear lash is 0.051-0.229 mm (0.002 -0.009 in.) with a maximum of 0.305 mm (0.012 in.) for used parts.

[m] Check the gear lash with the pedestal at the 3, 6, 9 and 12 o'clock positions, exactly as previously performed.

[n] When the proper readings of 0.025-0.114 mm (0.001-0.0045 in.) are obtained at all four (4) positions, hold the idler gear. Refer to step 8[i]as the first step and refer to step 8[j] as the final step, and torque the top two adjustable idler gear flanged nuts to 57-67 N·m (42·49 lb·ft).

[o] Check the gear lash again as outlined above, with the flanged nuts torqued, to ensure that gear lash is still within limits. If not correct repeat the procedure.

[p] If proper lash measurement cannot be obtained, replace gear(s) with new part(s). Refer to section 1.25.2, refer to section 1.26.2, refer to section 1.28.2and refer to section 1.27.2.

[q] Remove the gear lash adjusting tool from the gear case.

[r] Torque the bottom adjustable idler gear flanged nut to 57-67 N·m (42-49 lb·ft) torque.

[s] Remove the dial indicator and pedestal from the gear case.

 Copyright © 2004 DETROIT DIESEL CORPORATION

[t] Before installing the rocker arm shaft assemblies, check the torque on the end studs to ensure they were not loosened at time of removal. The torque specification is 101-116 N·m (75-86 lb·ft).

[u] Install the rocker arm shaft assemblies to the cylinder head. Refer to section 1.3.3.

[v] Adjust the intake and exhaust valve clearances, and fuel injector heights. Refer to section 12.2.

[w] Install the valve rocker cover. Refer to section 1.6.8for a one-piece valve rocker cover and refer to section 1.6.9for two-piece and three-piece rocker covers.

[x] Install the camshaft drive gear access cover and the gear case cover. Refer to section 1.10.3.

(Rev. 2004) *All information subject to change without notice.*
6SE483 0401 Copyright © 2004 DETROIT DIESEL CORPORATION

9. The procedures for measuring and adjusting the gear lash for the compact gear train are as follows:

   [a] Install the gear lash pedestal tool, J 46303 onto the center of the camshaft drive gear. See Figure 1-347. Bar the engine over until the tool is at the three o'clock position.

   [b] Attach the magnetic base on dial indicator to the gear case cover. Adjust it so the dial indicator is positioned at a 90° angle to the measuring bar and is at the scribe line on the bar. See Figure 1-347.

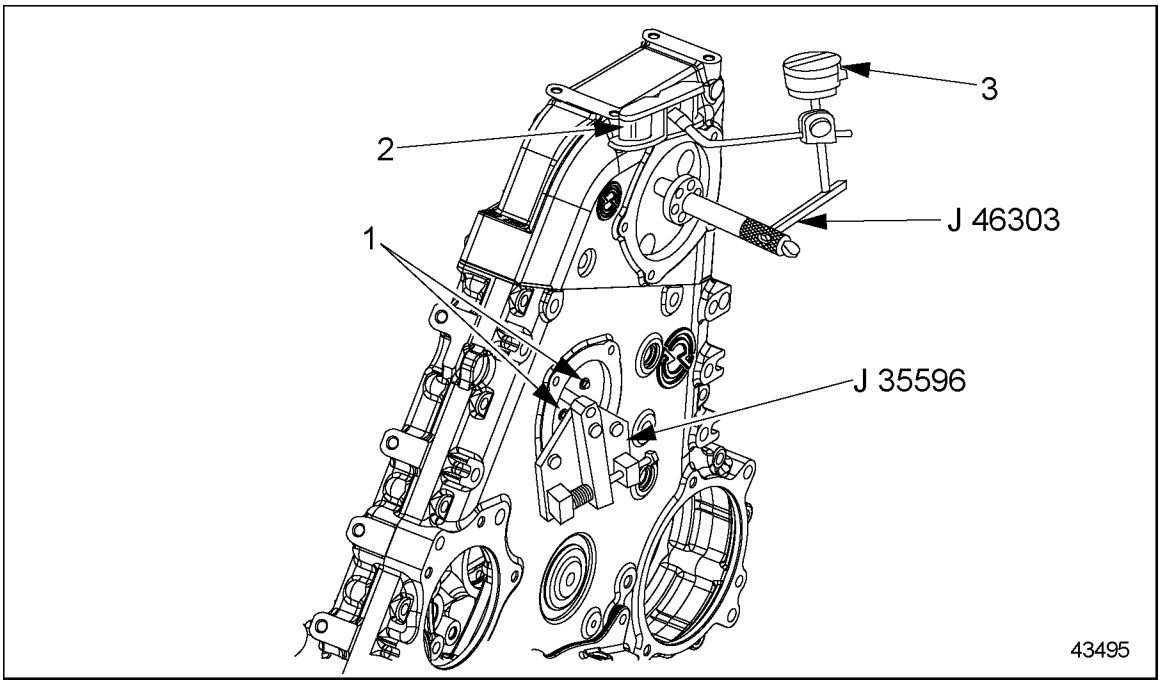

1. Adjustable Idler Gear Retaining Nut
2. Magnetic Base
3. Dial Indicator

Figure 1-347 Compact Gear Train Gear Lash Measurement

NOTE:
Since the teeth of the camshaft drive gear are not accessable, the gear lash measuring adaptor has a predetermined spot where the lash measurement must be taken. The measurement bar must be installed into the magnetic base correctly and the dial indicator positioned between the marks at the end of the bar.

   [c] Adjust the stem of the dial indicator to rest on the flat of the pedestal between the scribed marks on the end bar at a 90° angle.

   [d] If the adjustable idler gear has been removed, torque the three flanged nuts that retain the adjustable idler gear hub to the gear case to 57-67 N·m (42-49 lb·ft) to seat the assembly before proceeding.

 Copyright © 2004 DETROIT DIESEL CORPORATION

[e] Loosen the three locknuts that retain the adjustable idler gear hub to the gear case until they are hand tight.

[f] Insert the dowel portion of the gear lash adjusting tool J 35596 , through the hole in the adjustable idler gear retaining plate and into the adjustable idler gear hub, using the bottom two adjustable idler gear cover bolt holes. See Figure 1-347.

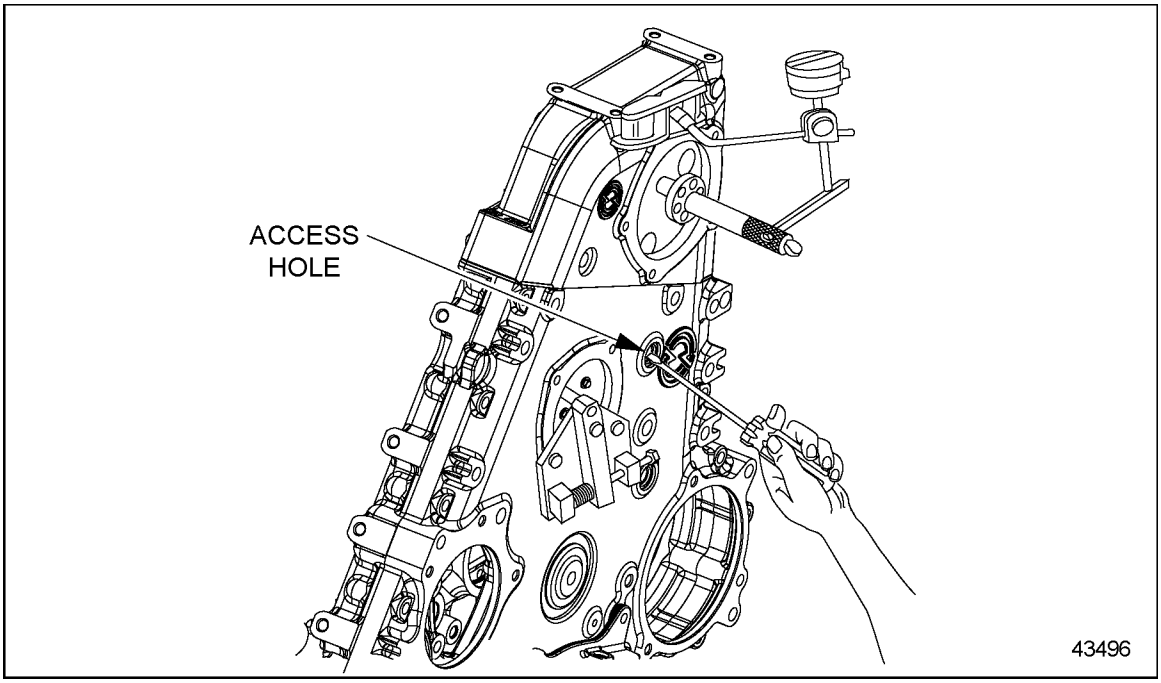

Figure 1-348 Compact Gear Train Lash Adjustment

NOTE:
For Series 60 engines equipped with the compact gear train, tool J 35596 needs to be modified to fit the four bolt pattern of the idler gear cover. A simple modification to the mounting plate will allow it to be securely bolted to the cover.

[g] Hold the adjustable idler gear by inserting a screwdriver through the access hole provided in the gear case cover. Engage between two of the idler gear teeth and apply upward pressure on the screwdriver to move the gear in a counterclockwise direction. This will prevent the gear from moving. See Figure 1-348

[h] Rotate the camshaft by hand and watch the dial indicator pointer.

[i] Turn the adjusting screw of the gear lash adjusting tool J 35596 , approximately 1-1/2 turns. Gear lash should be 0.051-0.229 mm (0.002-0.009 in.). Hold the adjustable idler gear with screwdriver refer to step [g]. Repeat steps [h] and [i] until proper lash is obtained.

NOTE:
If there is zero lash between the two gears, the dial indicator pointer will not move from zero.

(Rev. 2004) *All information subject to change without notice.*
6SE483 0401 Copyright © 2004 DETROIT DIESEL CORPORATION

[j] Check the gear lash with the pedestal at 3, 6, 9, and 12 o'clock positions, exactly as previously performed.

[k] When the proper readings of 0.051-0.229 mm (0.002-0.009 in.) are obtained at all four positions, hold the idler gear and torque the three adjustable idler gear flanged nuts to 103-113 N·m (76-83 lb·ft.).

[l] Remove the gear lash adjusting tool and check the gear lash again. Refer to step9[j]. If gear lash is not correct repeat steps9[e] through steps 9[j].

[m] If proper lash measurement cannot be obtained , replace gear(s) with new part(s).

[n] Remove the dial indicator and pedestal from the gear case.

[o] Before installing the rocker arm shaft assemblies, check the torque on the end studs to ensure they were not loosened at the time of removal. The torque specification is 101-116 N·m (75 -86 lb·ft).

[p] Install the rocker arm shaft assemblies to the cylinder head. Refer to section 1.3.3.

[q] Adjust the intake and exhaust valve clearances, and fuel injector heights. Refer to section 12.2.

[r] Install the valve rocker cover. Refer to section 1.6.8 for a one-piece valve rocker cover and refer to section 1.6.9 for two piece and three piece rocker covers.

[s] Install the camshaft drive gear access cover and the gear case cover. Refer to section 1.10.3.

 Copyright © 2004 DETROIT DIESEL CORPORATION

10. Install the fan support bracket "if required" as follows:

    [a] Clean the mating surfaces of the fan support bracket and gear case of all old gasket eliminator. Refer to the section on "Gasket Eliminator" in the "General Information" section at the beginning of this manual.

    [b] Apply a 1/16 in. bead of Gasket Eliminator PT-7276 (Loctite® 518), or equivalent, to the machined surface of the gear case cover surrounding the adjustable idler gear access.

    [c] Install the fan support bracket to the gear case cover using the torque values and tightening sequence. See Figure 1-349.

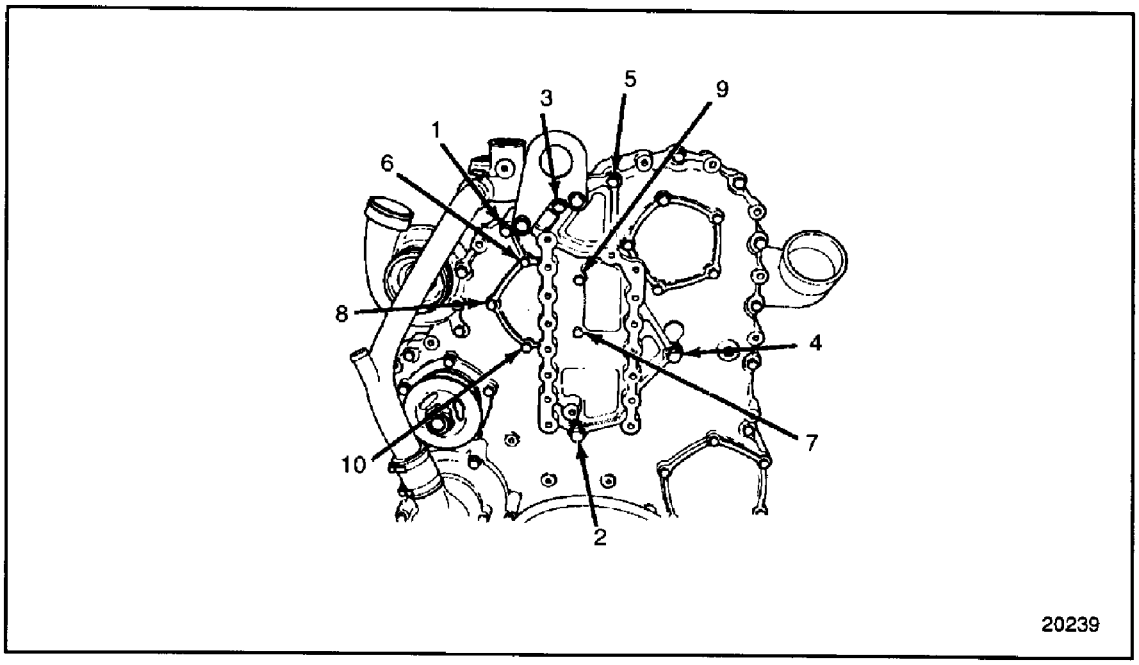

Bolt	Torque
1-3-5	58-73 N·m (43-54 lb·ft)
2-4	160-200 N·m (118-148 lb·ft)
6 to 10	30-38 N·m (22-28 lb·ft)

Figure 1-349 Fan Support Bracket Bolt Torque Sequence

(Rev. 2004) *All information subject to change without notice.*
6SE483 0401 Copyright © 2004 DETROIT DIESEL CORPORATION

11. Check the bull gear-to-accessory drive gear lash measurement as follows:

    [a] Install the gear lash tool, J 38662 and mount a magnetic dial indicator base and dial indicator to the gear case cover. See Figure 1-350.

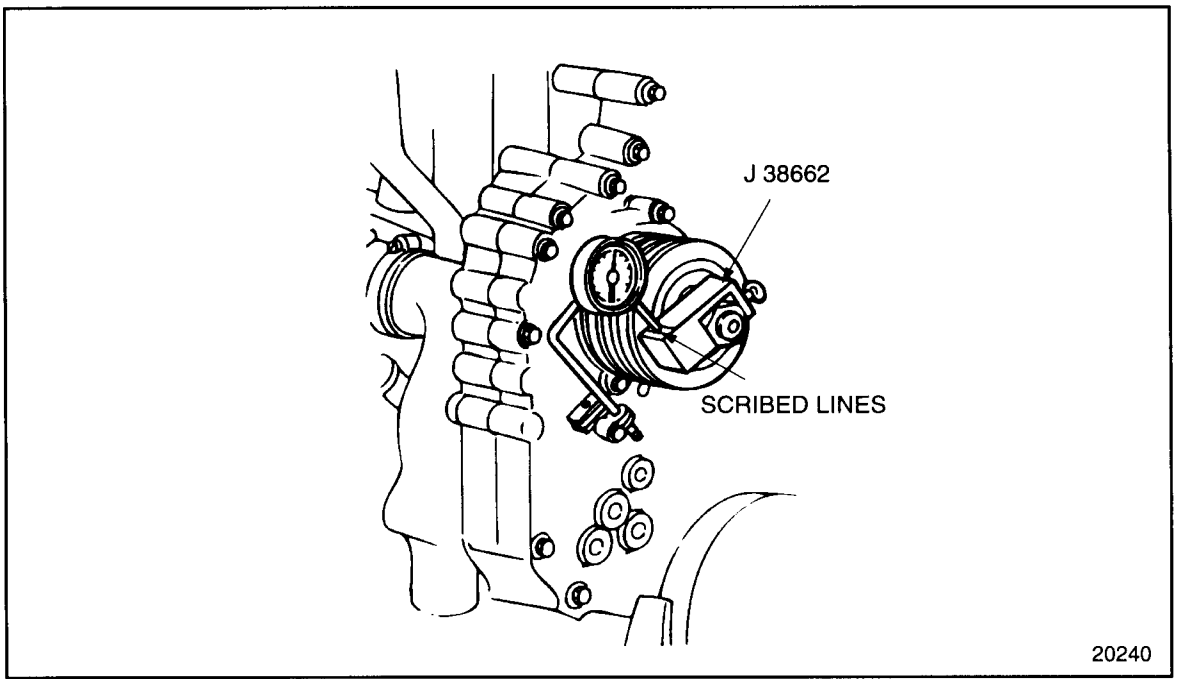

Figure 1-350 Accessory Drive Gear-to-Bull Gear Lash Measurement

    [b] Position the dial indicator to read between the scribed lines on the tool. See Figure 1-350.

    [c] Rotate the accessory drive pulley, read and record the total gear lash.

    [d] Gear lash measurements are 0.051-0.229 mm (0.002 -0.009 in.) for new parts, and 0.305 mm (0.012 in.) for used parts.

    [e] If proper lash measurement cannot be obtained, replace gear with a new part. Refer to section 1.27.2.

    [f] Remove the dial indicator and gear lash tool.

 Copyright © 2004 DETROIT DIESEL CORPORATION

12. Check the bull gear-to-water pump drive gear lash measurement for 1991 and later engines (with water pump impeller slip tester, J 35687-1) as follows:

NOTE:
The bull gear-to-water pump drive gear lash can be measured using the water pump impeller slip tester, J 35687-1, refer to step 12[a] through step 12[g]. Or by using the water pump gear lash tool, J 38977, refer to step 13. Engines built early in 1991 will need the water pump gear lash checked with the slip tester. These engines do not have a threaded hole in the water pump drive gear retaining bolt to accept the gear lash tool.

⚠ CAUTION:

To avoid injury from flying parts when working with components under spring tension, wear adequate eye protection (face shield or safety goggles).

[a] Remove the water pump cover snap ring with snap ring pliers. Remove water pump cover and seal ring.

[b] Install the water pump impeller slip tester, J 35687-1, to the water pump impeller with two 5/16-18 bolts, using the instructions supplied with the tool. See Figure 1-351.

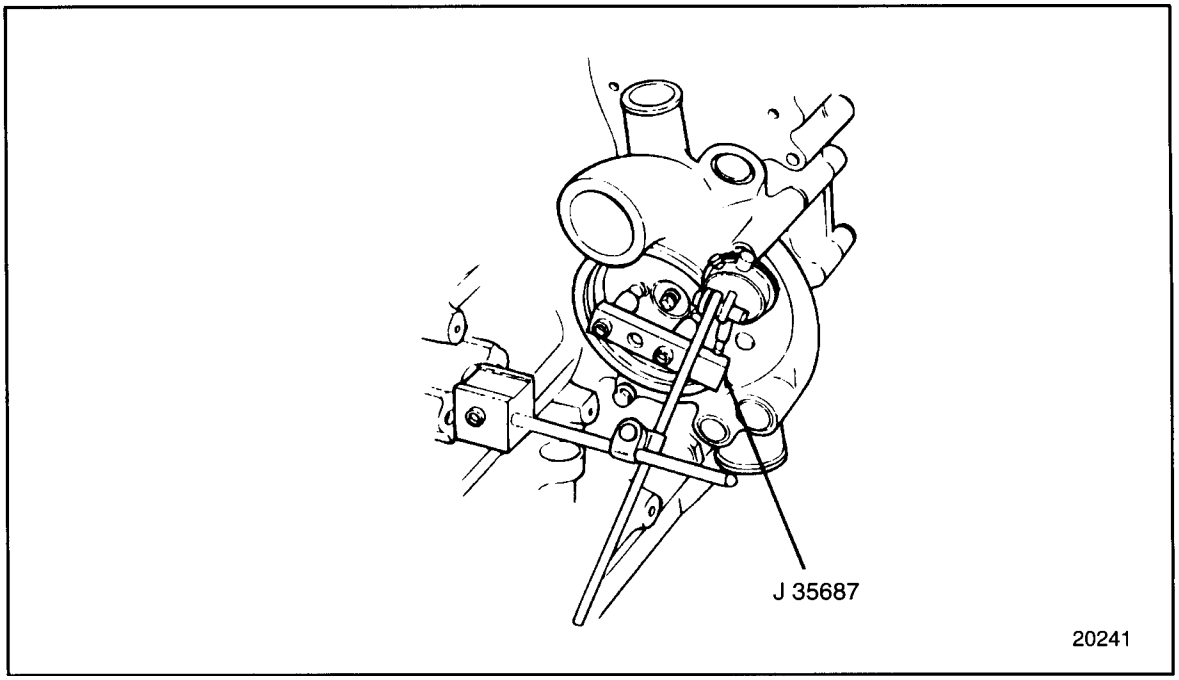

Figure 1-351 Water Pump Impeller Slip Tester Method

(Rev. 2004) *All information subject to change without notice.*
6SE483 0401 Copyright © 2004 DETROIT DIESEL CORPORATION

[c] One leg (the long one) of the tool has an inscribed line. Measuring with a dial indicator at this line of the tool, the gear lash measurement will be an exact 1:1 reading. Gear lash specifications are 0.051-0.229 mm (0.002 -0.009 in.).

[d] If proper lash cannot be obtained, replace gear with a new part. Refer to section 1.27.2.

[e] Remove the dial indicator.

[f] Remove the tool from the water pump.

[g] Inspect the water pump cover seal for cracks or splitting. Refer to section 4.2.3.1gear mounted or refer to section 4.3.3.1 for front mounted water pump. Replace seal if damage is found.

 Copyright © 2004 DETROIT DIESEL CORPORATION

13. Check the bull gear-to-water pump drive gear lash measurement for 1991 and later engines (with water pump gear lash tool, J 38977) as follows:

    [a] Remove the pipe plug in the gear case cover.

    [b] Install the water pump gear lash tool, J 38977-A, through the hole in the gear case and thread it into the special water pump drive gear retaining bolt. See Figure 1-352.

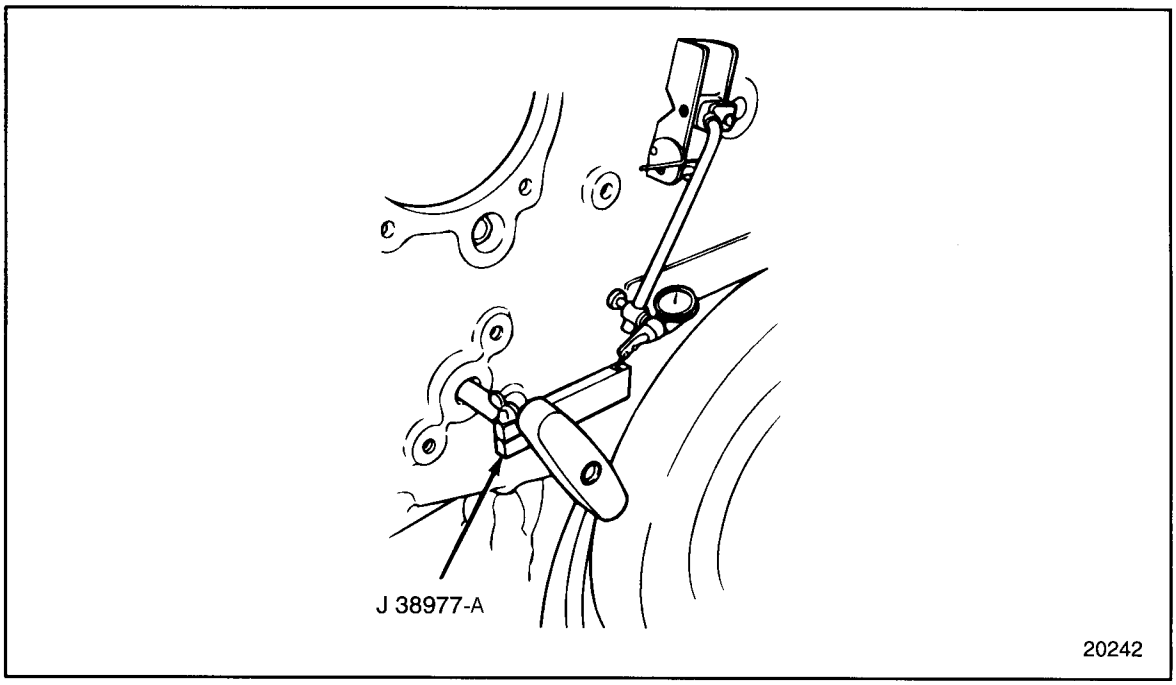

Figure 1-352 Water Pump Gear Lash Tool Method

    [c] The arm of this tool has an inscribed line. Measuring with a dial indicator at this line of the tool, the gear lash measurement will be an exact 1:1 reading. Gear lash specifications are 0.051-0.229 mm (0.002 -0.009 in.).

    [d] If proper lash cannot be obtained, replace the gear with a new part. Refer to section 1.27.2.

    [e] Remove the dial indicator and the gear lash tool.

    [f] Install the pipe plug in the gear case cover. Torque to 24-31 N·m (18-23 lb·ft).

14. Check the bull gear-to-water pump drive gear lash measurement of pre-1991 engines (with the water pump impeller slip tester method) as follows.

NOTE:
Skip step 14 and the following step 15, if the engine was built after 1990.

NOTE:
The bull gear-to-water pump drive gear lash can be measured using the water pump impeller slip tester, J 35687-1, or by inserting a bolt into one of the tapped holes in the water pump impeller. The lash can then be measured using a dial indicator.

(Rev. 2004) *All information subject to change without notice.*
6SE483 0401 Copyright © 2004 DETROIT DIESEL CORPORATION

[a] Install the water pump impeller slip tester, J 35687-1, to the water pump impeller with two 5/16-18 bolts, using the instructions supplied with the tool. See Figure 1-353.

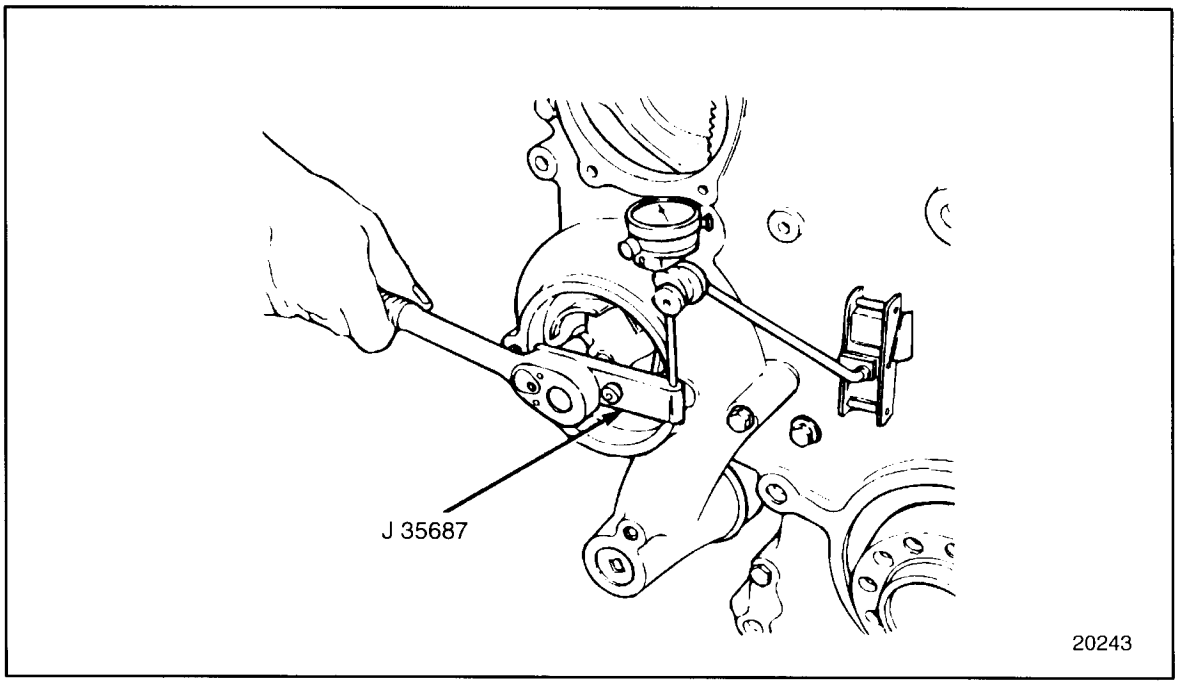

Figure 1-353 Water Pump Drive Gear Lash Measurement

[b] One leg (the long one) of the tool has an inscribed line. Measuring with a dial indicator at this line of the tool, the gear lash measurement will be an exact 1:1 reading. Gear lash specifications are 0.051-0.229 mm (0.002 -0.009 in.).

[c] If proper lash measurement cannot be obtained, replace the gear with a new part. Refer to section 1.27.2.

 Copyright © 2004 DETROIT DIESEL CORPORATION

15. Check the bull gear-to-water pump drive gear lash measurement for pre-1991 engines (with the bolt method) as follows:

    [a] Install a 5/16-18 bolt and nut into one of the tapped holes in the water pump impeller. See Figure 1-354.

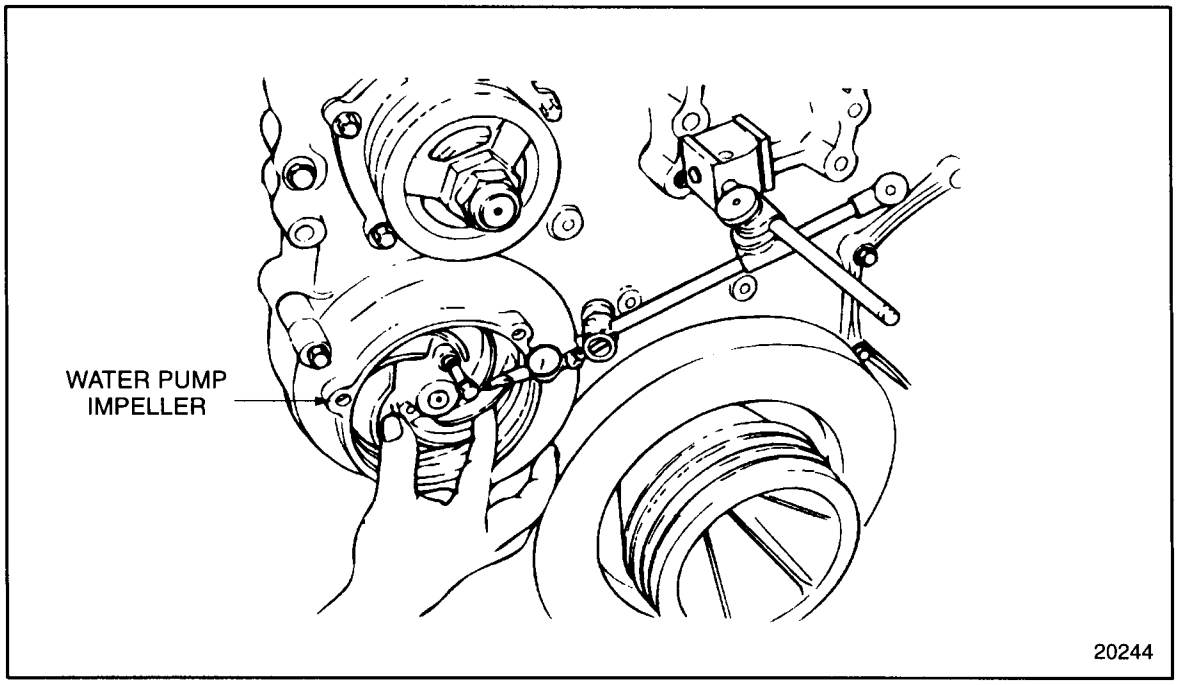

Figure 1-354 Water Pump Drive Gear-to-Bull Gear Lash Measurement

    [b] Install a magnetic dial indicator base and dial indicator. See Figure 1-354.

    [c] Position the stem of the dial indicator on a flat of the bolt.

    [d] Preload the water pump impeller.

    [e] Zero the dial indicator.

    [f] Rotate the water pump impeller, read and record the total gear lash. Multiply this reading by 2.45 to obtain actual lash. Gear lash measurements are 0.051 to 0.229 mm (0.002 -0.009 in.).

    [g] If proper lash cannot be obtained, replace the gear with a new part. Refer to section 1.27.2.

    [h] Remove the dial indicator base and dial indicator.

    [i] Remove the bolt and nut from the water pump impeller (if used).

    [j] Inspect the rubber seal ring on the water pump cover for splitting or cracks. Install a new seal, if necessary, between the water pump cover and the water pump housing. Refer to step 12, and perform step 12[g].

    [k] Install the two bolts that secure the water pump cover to the water pump housing. Torque the bolts to 30-38 N·m (22-28 lb·ft).

(Rev. 2004) *All information subject to change without notice.*
6SE483 0401 Copyright © 2004 DETROIT DIESEL CORPORATION

16. Check the bull gear-to-air compressor drive gear lash measurement as follows:

    [a] Mount a magnetic dial indicator base and dial indicator to the gear case cover so that the stem of the dial indicator may be positioned on a tooth of the air compressor drive gear.

    [b] Preload the drive gear in one direction.

    [c] Zero the dial indicator.

    [d] Rotate the air compressor drive gear, read and record the total gear lash. Gear lash measurements are 0.051-0.229 mm (0.002 -0.009 in.) for new parts, with a maximum of 0.305 mm (0.012 in.) for used gears.

    [e] If proper lash cannot be obtained, replace the gear with a new part. Refer to section 1.27.2.

    [f] Remove the dial indicator and magnetic base.

    [g] Install the power steering drive coupling to the air compressor drive gear (if equipped with power steering) and insert a new O-ring on the power steering pump (if so equipped).

    [h] Install the power steering pump to the gear case cover, meshing the drive coupling properly.

    [i] Install and torque the power steering pump mounting bolts to 30-38 N·m (22-28 lb·ft). Tighten the five bolts alternately and evenly, in a star-shaped pattern, to progressively draw the power steering pump into the gear case cover.

NOTE:
Do not force the bolts. If resistance is encountered, remove the power steering pump and re-engage the drive hub with the coupling.

    [j] If the engine is not equipped with power steering, install the air compressor drive gear access cover using a new gasket.

    [k] Install and torque the retaining bolts to 30-38 N·m (22-28 lb·ft), using a star-shaped pattern.

 Copyright © 2004 DETROIT DIESEL CORPORATION

1.22.3 Installation of Gear Train and Engine Timing

After all of the gear lash measurements have been taken, assemble the engine components as follows:

1. Install the air conditioner compressor and brackets (if so equipped). Install the air conditioner drive belt.
2. Install the alternator and brackets. Refer to section 8.2.3.
3. Install the alternator drive belts. Refer to section 13.13.10.
4. Install the fan and fan hub assembly. Refer to section 4.7.6.
5. Adjust the alternator, fan and air conditioner compressor drive belts to the specifications. Refer to section 13.13.10. Torque the accessory mounting bolts to specifications.
6. Install any other equipment such as hoses, brackets, lines or electrical looms that were removed to gain access to the engine gear case cover.
7. Install the engine oil pan. Refer to section 3.11.4.
8. Fill the engine crankcase. Refer to section 13.13.1.
9. Refer to section 11.8for verification of proper gear train and engine timing.

(Rev. 2004) *All information subject to change without notice.*
6SE483 0401 Copyright © 2004 DETROIT DIESEL CORPORATION

1.23 THRUST PLATE PERIMETER SEAL

The camshaft thrust plate perimeter seal forms a seal between the camshaft thrust plate and the gear case cover. If the seal should require replacement due to leakage, the seal can be replaced without removing the cylinder head. The following procedure should be used if the perimeter seal requires replacement.

 Copyright © 2004 DETROIT DIESEL CORPORATION

1.23.1 Repair or Replacement of Thrust Plate Perimeter Seal

To determine if repair or replacement of the thrust plate perimeter seal is necessary, perform the following procedure. See Figure 1-355.

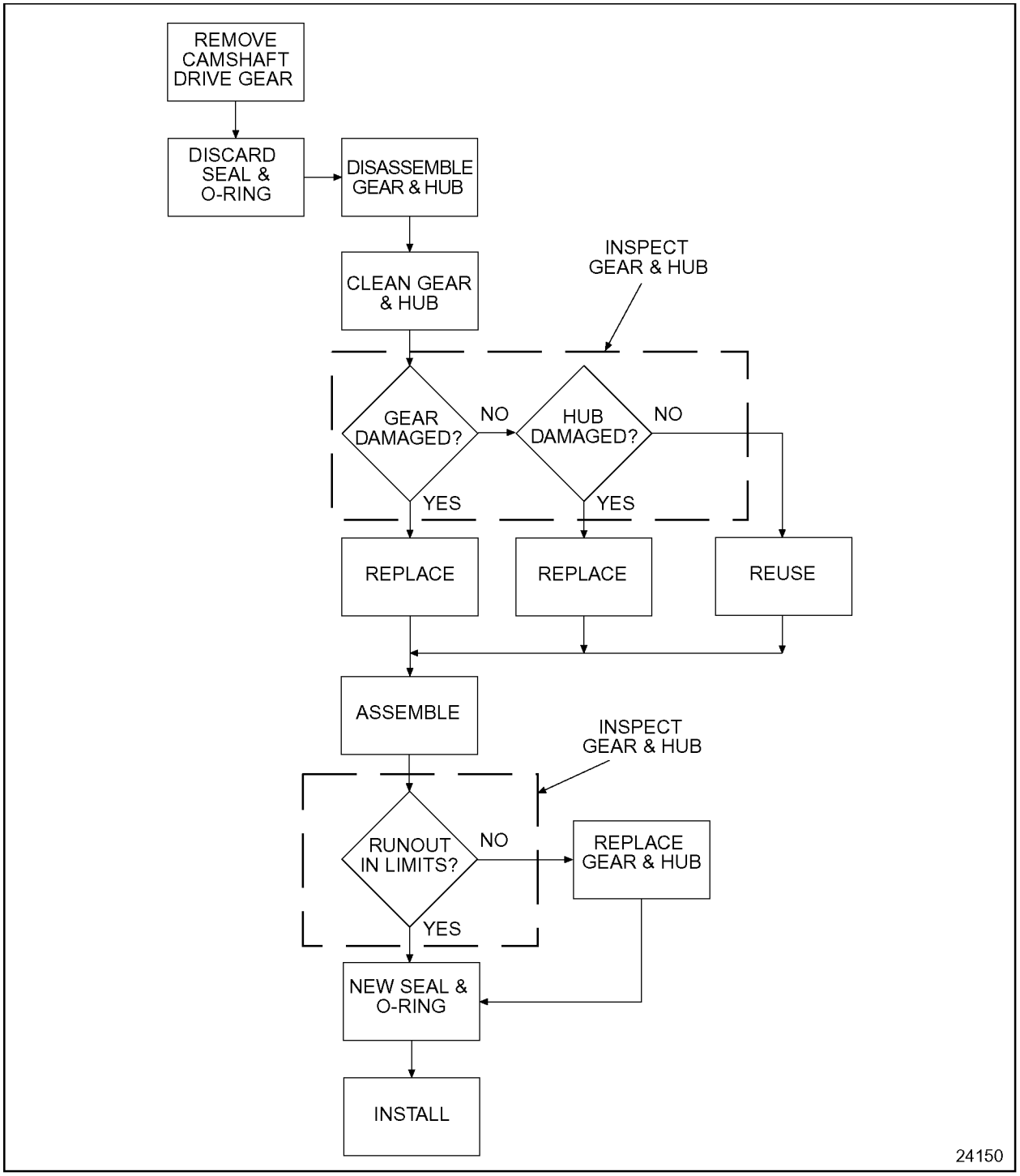

Figure 1-355 Flowchart for Repair or Replacement of Camshaft Thrust Plate Perimeter Seal

(Rev. 2004) *All information subject to change without notice.*
6SE483 0401 Copyright © 2004 DETROIT DIESEL CORPORATION

1.23.2 Removal of Thrust Plate Perimeter Seal

Remove the thrust plate perimeter seal as follows:

1. Remove the air cleaner and charge air cooler ducting from the turbocharger and air intake manifold. Refer to section 6.2.2.
2. If the upper radiator hose prevents removal of the valve rocker cover, drain coolant into a suitable container until it is below the level of the thermostat housing outlet. Then disconnect the hose from the thermostat housing. Refer to section 4.5.2.
3. Remove the valve rocker cover. Refer to section 1.6.1.
4. Remove the five bolts that secure the camshaft drive gear access cover to the gear case cover. See Figure 1-356.

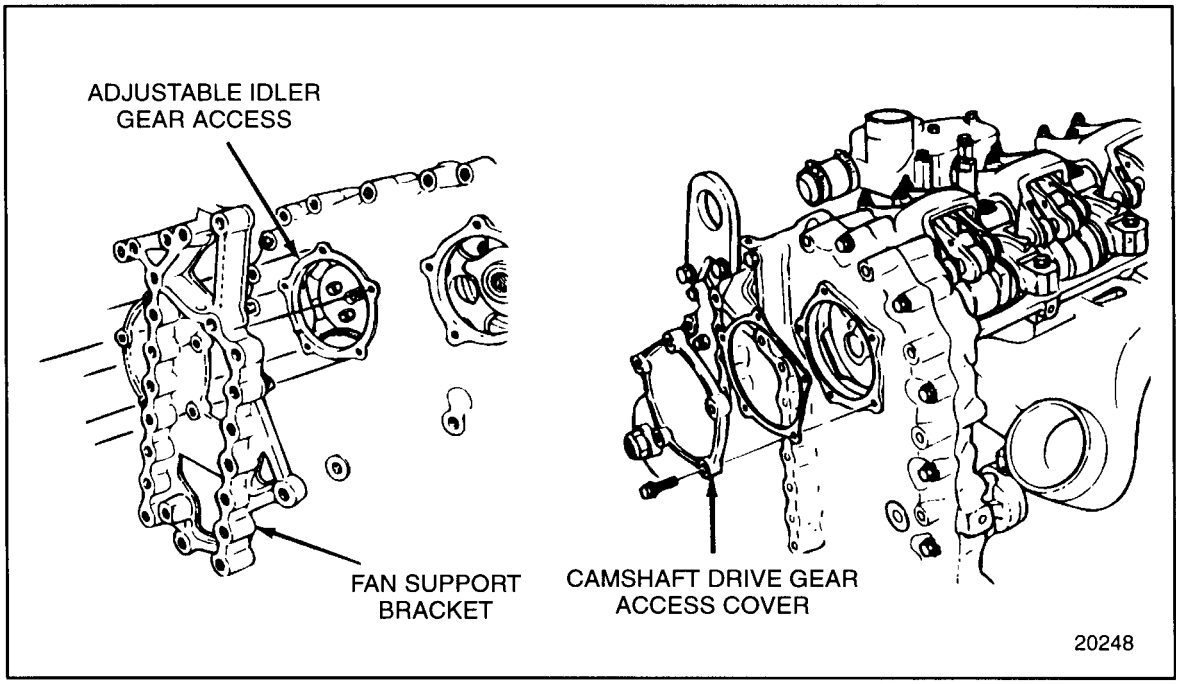

Figure 1-356 Camshaft Drive Gear Access Cover and Adjustable Idler Gear Access

5. Remove Jake Brakes®, if equipped. Refer to section 1.30.2.
6. Remove the rocker and rocker shaft assemblies. Refer to section 1.3.2.
7. Using LPS® Contact Cleaner or equivalent residue-free solvent, clean the gear case back/thrust plate area to improve visual access to the seal area. Wipe the area dry with paper towels.
   LPS® is a registered trademark of LPS Laboratories, Inc.

 Copyright © 2004 DETROIT DIESEL CORPORATION

8. Using an appropriate marker, scribe a vertical locator line across the gear case and the back face of the camshaft thrust plate. This will ensure proper positioning of the thrust plate during reassembly. See Figure 1-357.

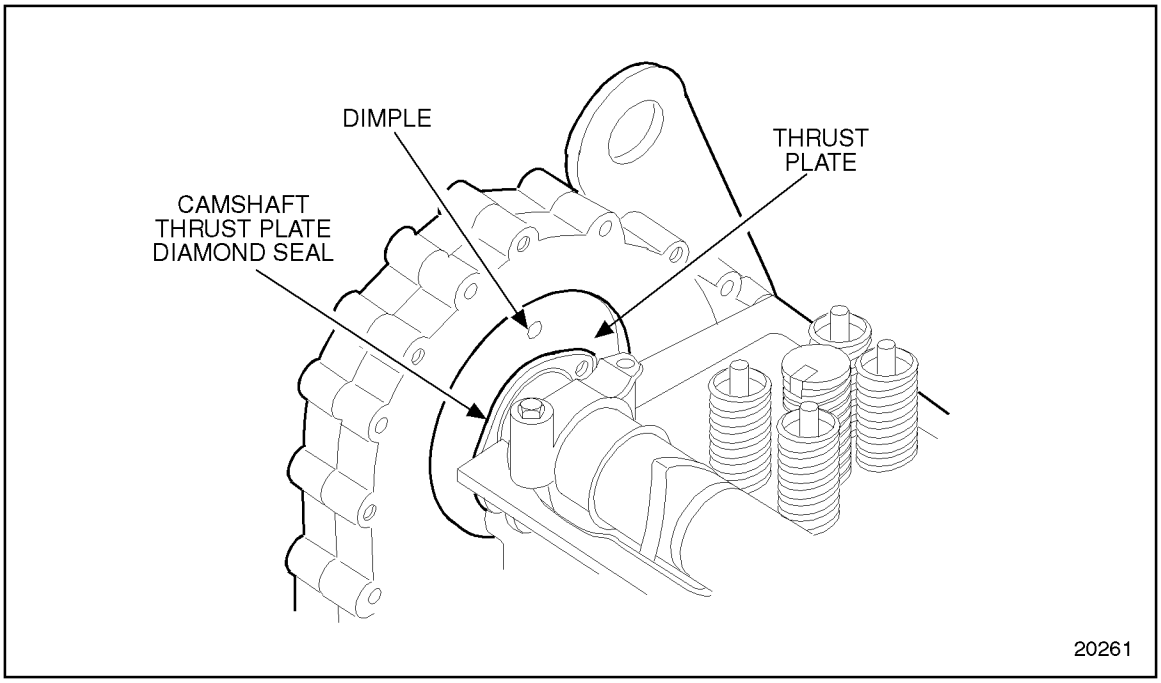

Figure 1-357 Camshaft Thrust Plate Clearance

9. Using the square hole in the middle of the crankshaft pulley, rotate the crankshaft to align the lightening holes in the camshaft drive gear with the camshaft thrust plate mounting bolts, providing access to the bolts.
10. Using an appropriate marker such as a grease pencil, mark the gear teeth. This will ensure proper cam timing during reassembly.

(Rev. 2004) *All information subject to change without notice.*
6SE483 0401 Copyright © 2004 DETROIT DIESEL CORPORATION

11. Insert the shoe of the camshaft drive gear torque holding tool, J 35652, through a lightening hole of the camshaft drive gear. See Figure 1-358.

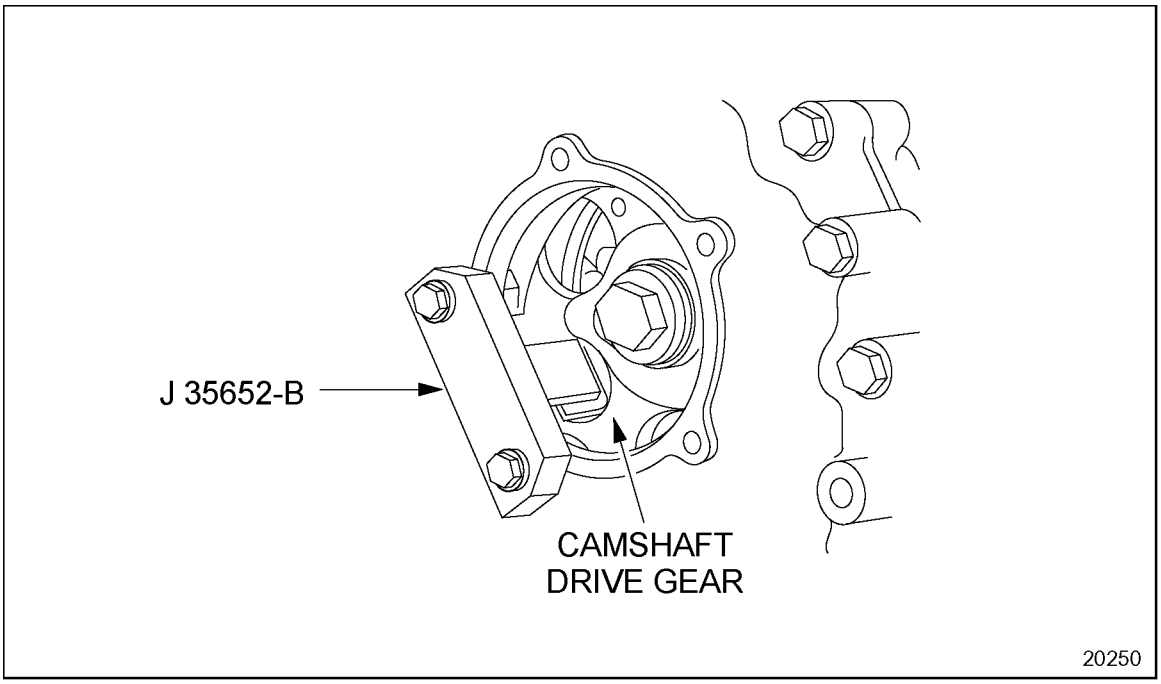

Figure 1-358 Installation of Camshaft Drive Gear Torque Holding Tool

12. Using the 3/4 in. square hole in the center of the crankshaft pulley, bar the engine over slightly so that the bolt holes in the holding tool align with the access cover bolt holes in the gear case cover.
13. Install the camshaft drive gear torque holding tool, J 35652, to the gear case, engaging one of the lightening holes in the camshaft drive gear. Use two of the access cover bolts to secure the tool to the gear case cover.
14. Using a long 3/4 in. drive breaker bar and a 27 mm impact socket, remove the camshaft drive gear mounting bolt. Discard the bolt.
15. Remove camshaft drive gear torque holding tool J 35652 from the gear case cover.
16. Insert a clean shop towel into the gear case opening to prevent removed bolts from falling into the gear case.

NOTICE:
Do not allow bolts or the shop towel to fall into the gear case. Failure to remove loose bolts or the shop towel from the gear case may result in severe gear train damage at engine startup.

17. Remove the three (current) or two (former) camshaft thrust plate mounting bolts carefully to avoid dropping them into the gear case. Refer to section 1.24.2.

 Copyright © 2004 DETROIT DIESEL CORPORATION

18. Reverse camshaft gear pilot tool J 35906 by turning it 180 degrees and install it to the camshaft drive gear access opening using three of the access cover bolt holes. The J tool number should face away from the engine and the hub end of the tool should be inside the access hole. Tighten the three tool retaining bolts.
19. Engage the puller bolt in the threads of the camshaft drive gear hub until the bolt is tight. Turn the bolt clockwise, pulling the thrust plate towards the front of the engine approximately 6-7 mm (1/4 in.) until the camshaft hub contacts the J tool and the perimeter seal is clearly accessible. The gap between the end of the camshaft and the thrust plate should be wide enough to permit the perimeter seal to pass through.
20. Remove the number 1 camshaft bearing cap using socket tool J 36003 part of J 36003–A. See Figure 1-359.

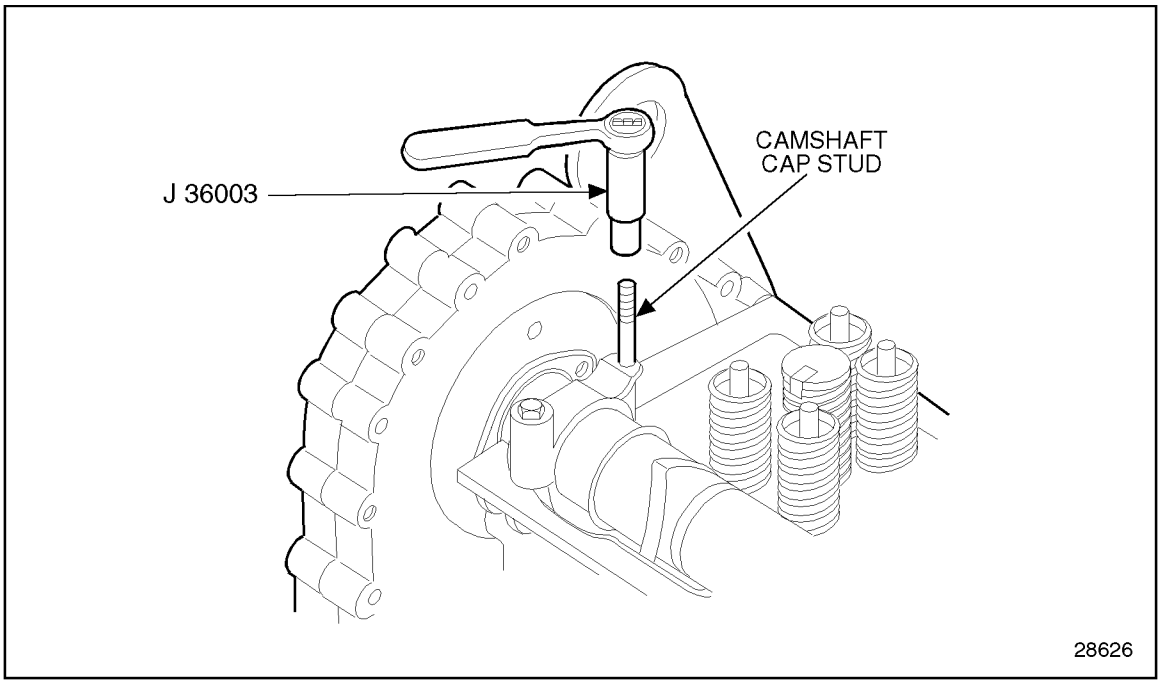

Figure 1-359 Removal of Camshaft Cap Stud

21. Using a flat-bladed screwdriver on the side of one of the camshaft lobes, lever the camshaft back and away from the thrust plate.
22. Using a hook-end pick, J 39227, reach into the thrust plate bore in the gear case, hook the perimeter seal, and pull it off of the thrust plate. Pass the seal between the thrust plate and camshaft and discard. Pull the diamond seal from the thrust plate groove and discard.

(Rev. 2004) *All information subject to change without notice.*
6SE483 0401 Copyright © 2004 DETROIT DIESEL CORPORATION

1.23.2.1 Inspection of Thrust Plate Perimeter Seal Groove

Inspect the thrust plate perimeter seal groove as follows:

1. Rotate the thrust plate by hand and visually inspect to make sure all seal material is completely out of the seal groove. If necessary, use a work light or flashlight to thoroughly inspect the groove.
2. Wipe the groove clean after inspection.

1.23.3 Installation of Thrust Plate Perimeter Seal

Install the thrust plate perimeter seal as follows:

NOTICE:
Failure to install seals properly, failure to install new, dry (no lubrication) bolts where required, or failure to tighten bolts to the required torque using an accurately calibrated hand torque wrench may result in bolt loosening and loss of clamping load, which may cause severe engine damage.

NOTICE:
Do not use RTV or any other type of sealant on the thrust plate perimeter seal. Application of sealant will prevent proper seal crush (flow), which may result in seal leakage.

1. After passing a new perimeter seal between the thrust plate and cylinder head, carefully install it in the thrust plate perimeter groove with the ribbed edges against the sides of the groove and the beveled edge facing out.

 Copyright © 2004 DETROIT DIESEL CORPORATION

NOTE:
The former thrust plate perimeter seal was redesigned to provide greater reliability and less susceptibility to twisting during installation. See Figure 1-360 for design configuration.

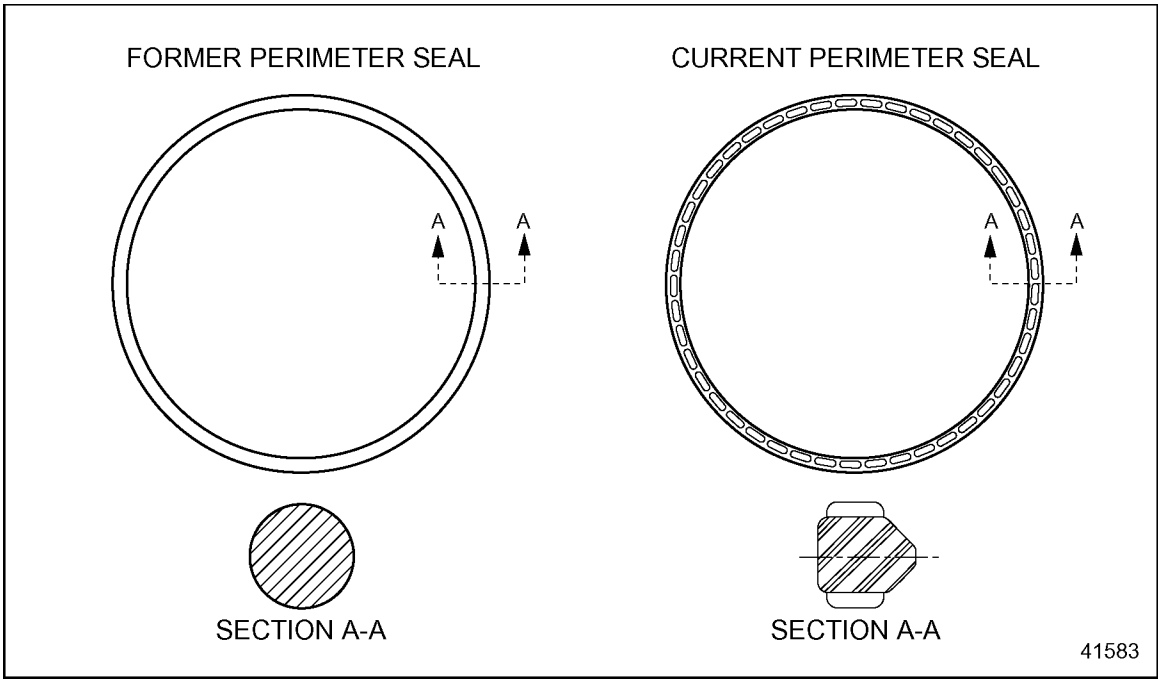

Figure 1-360 Thrust Plate Perimeter Seal

NOTICE:
Failure to properly seat the perimeter seal in the thrust plate groove will result in seal damage. If the seal twists at initial installation or when pushing in the thrust plate, the seal can be cut and damage will result. Any seal damage can result in seal leakage during engine operation.

2. Rotate the thrust plate by hand and feel the seal to ensure it is fully seated in the thrust plate perimeter groove. If any ribs are felt on the outside edge, the seal is twisted and must be adjusted. Apply Super Lube® to the inside bore of the gear case housing and not the seal.

NOTE:
When pushing the thrust plate and seal into the gear case, the seal may appear to twist. Do not be concerned because it is only rolling a little. As long as the seal was not twisted when initially installed, the seal will straighten itself out because its profile is designed to resist rolling.

(Rev. 2004) *All information subject to change without notice.*
6SE483 0401 Copyright © 2004 DETROIT DIESEL CORPORATION

NOTE:
The former two-bolt thrust plate face seal was redesigned to provide superior oil sealing characteristics. See Figure 1-361 for design configuration.

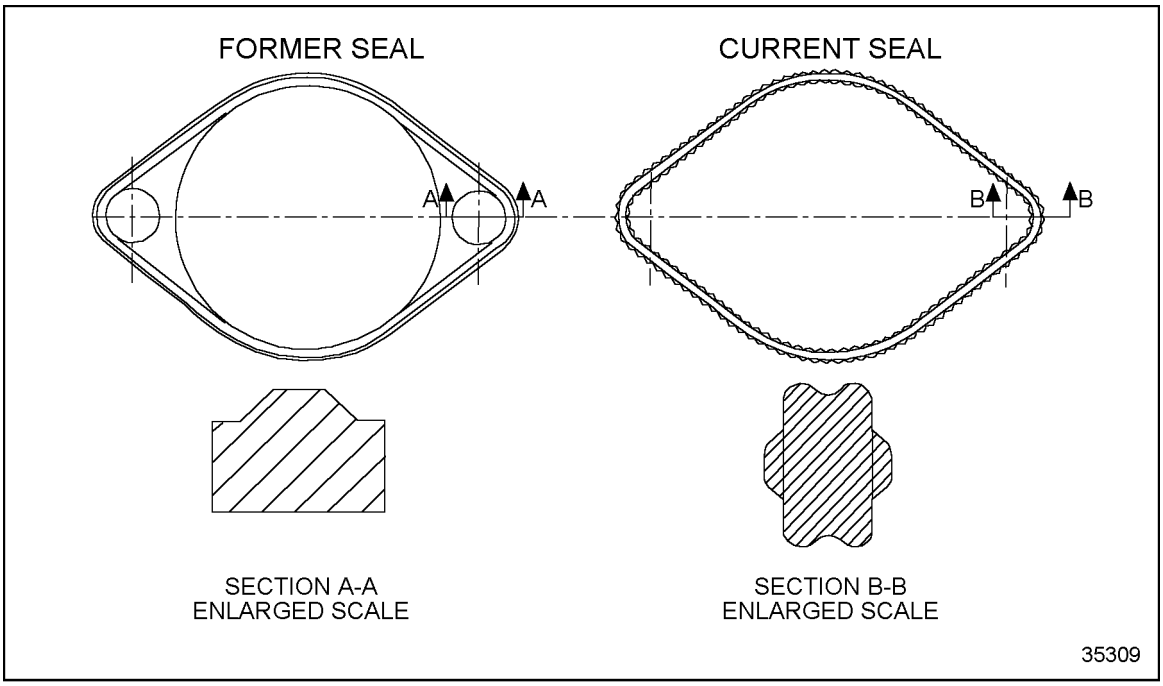

Figure 1-361 Two-bolt Camshaft Thrust Plate Face Seal

NOTE:
The current thrust plate uses a three-bolt design, as of serial number 6R352129.

3. Inspect the thrust plate face seal groove to ensure all seal material is removed. Clean the face seal groove with LPS® Contact Cleaner or equivalent residue-free cleaner. *Do not use mineral spirits, since this will leave a residue.* Wipe and dry the area thoroughly with clean paper towels.

 Copyright © 2004 DETROIT DIESEL CORPORATION

CAUTION:

To avoid injury from flying debris when using compressed air, wear adequate eye protection (face shield or safety goggles) and do not exceed 40 psi (276 kPa) air pressure.

NOTICE:

Always bow out the cam cap bolt holes in the cylinder head before applying sealant and installing the cam cap. Failure to observe this step may cause lubricating oil trapped in the holes to push the sealant away from the cap when bolts are installed, resulting in a leak path.

4. For proper adhesion of the sealant at the cam cap/cylinder head joints, this area *must* be completely cleaned and all residue removed before new sealant is applied. Clean the cylinder head and bearing cap contact surfaces thoroughly with LPS® Contact Cleaner or equivalent residue-free cleaner. Wipe dry with clean paper towels.

NOTICE:

Failure to clean surfaces completely and remove all residue may result in improper gasket eliminator application, which may cause oil seepage during engine operation.

NOTICE:

Do not use RTV or any other type of sealant or spray adhesive on the camshaft diamond seal. Application of sealant or adhesive will prevent proper seal crush (flow), which may result in seal leakage.

NOTE:
Camshaft thrust plate face seals are not reusable. When replacement of a perimeter seal or removal of the camshaft is required, a new camshaft thrust plate face seal *must* be installed.

5. Install a new seal in the thrust plate, making sure it is securely seated in the thrust plate face seal groove.

(Rev. 2004) *All information subject to change without notice.*
6SE483 0401 Copyright © 2004 DETROIT DIESEL CORPORATION

6. For engines built after May 1999, use sealant 23525918 (50 mL) or 23525919 (330 mL) in the two diagonal groove cuts of the front bearing cap only. For engines built prior to May 1999, apply DDC gasket eliminator 23523064, or equivalent, to the joint surfaces of the number 1 camshaft bearing cap. See Figure 1-362. To help ensure proper adhesion of the gasket eliminator to the bearing cap, do not apply oil to the number 1 cam bearing or journal before installation of the bearing cap.

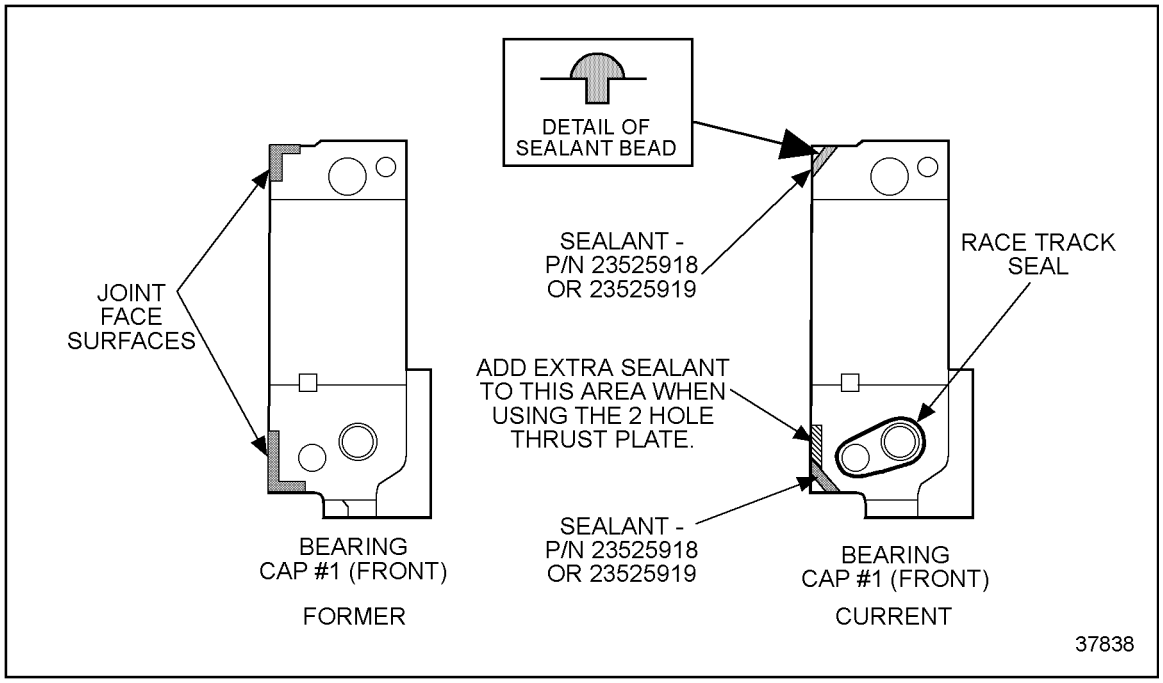

Figure 1-362 Gasket Eliminator Application

 Copyright © 2004 DETROIT DIESEL CORPORATION

7. When replacing the number 1 cam cap on engines with serial numbers between 06R0295500 and 06R0301875, the depth of the cam cap oil passage seal recess in the cylinder head *must* be measured before camshaft cap installation. See Figure 1-363.

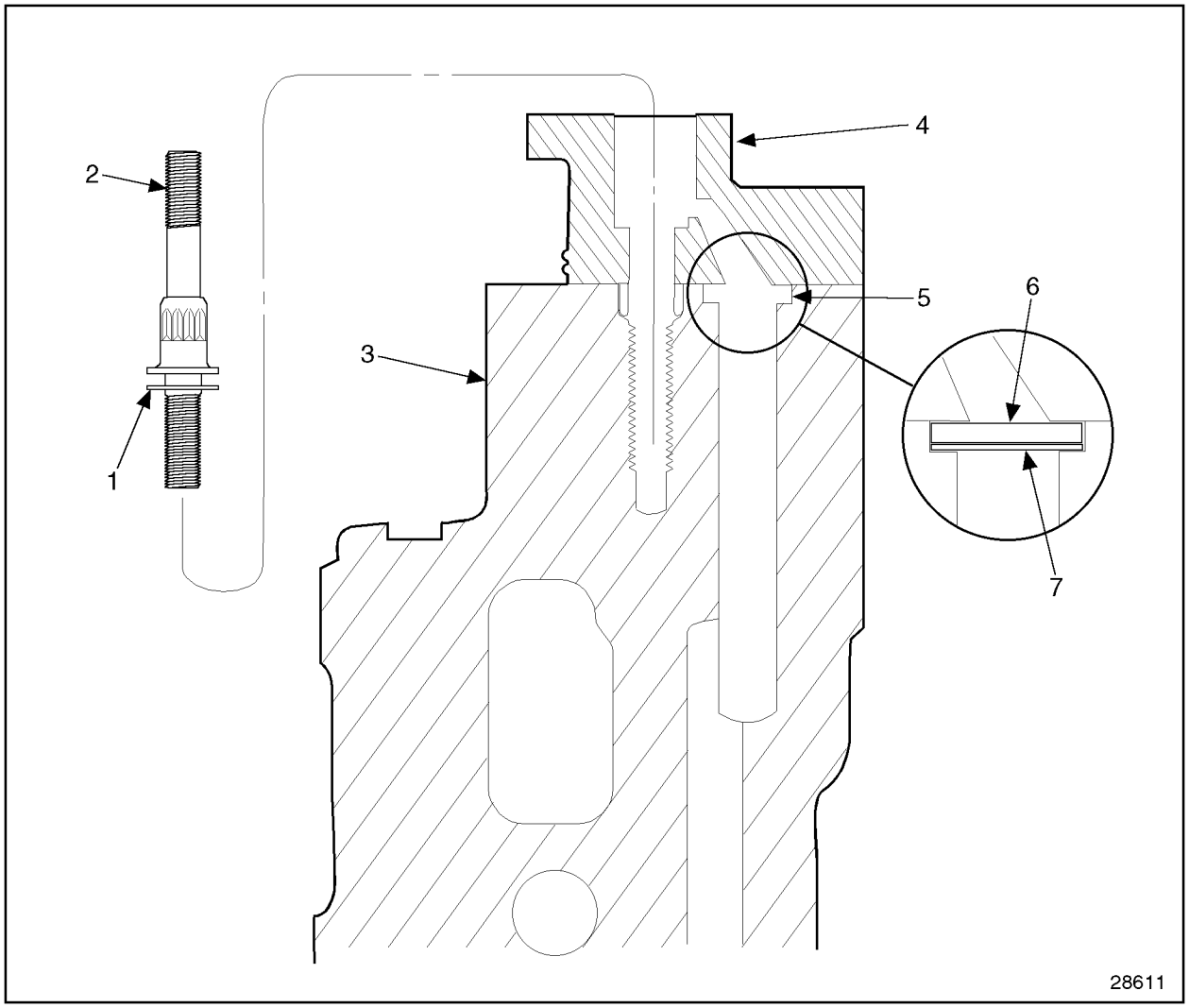

1. Bearing Cap Stud Seal
2. Bearing Cap Stud
3. Cylinder Head
4. Camshaft Bearing Cap
5. Bearing Cap Oil Passage
6. Oil Passage Seal Ring
7. Shim (If Required)

Figure 1-363 Cross-sectional View of Cylinder Head and Camshaft Bearing Cap

(Rev. 2004) *All information subject to change without notice.*
6SE483 0401 Copyright © 2004 DETROIT DIESEL CORPORATION

NOTICE:

Failure to install the shim under the seal when cam bearing cap seal bore depth is more than 3.04 mm may result in oil leakage around the seal during engine operation.

8. If bore depth is not within 2.64 mm - 3.04 mm, seal shim part number 23521153 *must* be installed *under* the square cut ring seal to provide proper sealing.
9. With a new square cut seal (and shim, if required) installed in the cylinder head oil passage seal recess, replace the number 1 cam cap. Install a new cap stud seal (part number 23521111) onto the flange of the camshaft cap stud, then thread the stud and the camshaft cam bolt into the cylinder head. See Figure 1-358. Alternating back and forth, torque cap stud and bolt progressively to 128–148 N·m (94–109 lb·ft).
10. Loosen the large center bolt of tool J 35906 until it almost disengages from the camshaft hub.
11. Align the dowel on the camshaft with the cam hub. Push rearward on the tool J 35906 bolt while centering the thrust plate in the gear case bore and observing the alignment marks made previously on the thrust plate and gear case.
12. Install a metric bolt and washer in a gear case cover bolt hole next to the access hole.

NOTE:
To ensure proper camshaft-to-thrust plate alignment, the scribe marks on the gear case and thrust plate *must* be aligned before the thrust plate is reinstalled in the gear case.

13. Carefully align the scribe marks on the thrust plate and gear case. Then, using a flat-bladed screwdriver or pry bar placed on the bolt washer and working from side to side, lever the thrust plate back toward the camshaft. With the thrust plate securely installed in the gear case, remove the metric bolt and washer carefully to avoid dropping them into the gear case.

NOTICE:

Improper installation of the camshaft thrust plate bolts may result in thrust plate bolt stretching or breakage. Bolt stretching may result in an inaccurate torque. Bolt breakage may cause severe gear train damage.

14. Remove tool J 35906. Carefully install new, dry (no lubrication) thrust plate mounting bolts through the thrust plate and into the cylinder head and No. 1 camshaft bearing cap. Using a 13 mm socket and an accurately calibrated hand torque wrench, torque the bolts alternately and progressively to 30 - 38 N·m (22 - 28 lb-ft). To avoid excessive tightening and possible bolt stretching, do not use an air wrench, since this may not provide an accurate torque.

 Copyright © 2004 DETROIT DIESEL CORPORATION

NOTICE:

Always use a new bolt when replacing the camshaft hub. The camshaft retaining bolt is considered a single-use item and *cannot be reused,* regardless of apparent condition. Reusing this bolt may result in excessive bolt stretch, which could lead to loss of bolt torque, hub loosening, and severe engine damage.

15. Coat the threads and underside of the head of the camshaft drive gear-to-camshaft bolt with International Compound #2®. Check the marks previously made on the gear teeth to ensure proper cam gear timing. Install the bolt to the camshaft, finger tighten.

NOTICE:

Only tool J 35652 should be used to hold the camshaft drive gear stationary while loosening or tightening the camshaft drive gear-to-camshaft bolt to prevent component damage.

NOTE:
The camshaft should be held in place while starting the camshaft drive gear-to-camshaft bolt, to prevent disengaging the camshaft dowel from the thrust plate hub, requiring disassembly and timing of the camshaft.

16. Insert tool J 35652 through a lightening hole of the camshaft drive gear.
17. Using the 3/4 in. square hole in the center of the crankshaft pulley, bar the engine over slightly to position the camshaft drive gear holding tool so that the bolt holes in the holding tool align with the access cover bolt holes in the gear case cover.
18. Install two of the access cover bolts to secure the tool to the gear case cover.

NOTE:
Ensure any residual oil is removed from the dowel face of the camshaft and mating hub before installing the drive gear.

19. Apply a light coating of International Compound #2® to the camshaft drive gear mounting bolt threads and the underside of the bolt head. Using a 27 mm impact socket and suitable torque wrench, torque the camshaft drive gear-to-camshaft bolt to 75 N·m (55 lb·ft). Then turn the bolts clockwise 120 degrees (two flats of the bolt head) to achieve the required torque.
20. Remove camshaft drive gear torque holding tool J 35652.
21. Install the access cover plate to the gear case cover. Refer to section 1.10.3.
22. Install the rocker and rocker shaft assemblies. Refer to section 1.3.3.
23. Install the Jake Brakes®, if equipped. Refer to section 1.30.5.
24. Install the valve rocker cover. Refer to section 1.6.7or refer to section 1.6.8.

(Rev. 2004) *All information subject to change without notice.*
6SE483 0401 Copyright © 2004 DETROIT DIESEL CORPORATION

25. Install or reconnect any other components that were removed or disconnected for this procedure.

 Copyright © 2004 DETROIT DIESEL CORPORATION

1.24 CAMSHAFT AND CAMSHAFT BEARING

The Series 60 camshaft is located on top of the cylinder head, just below the valve cover. The camshaft actuates the intake and exhaust valves and injector operating mechanism. See Figure 1-364.

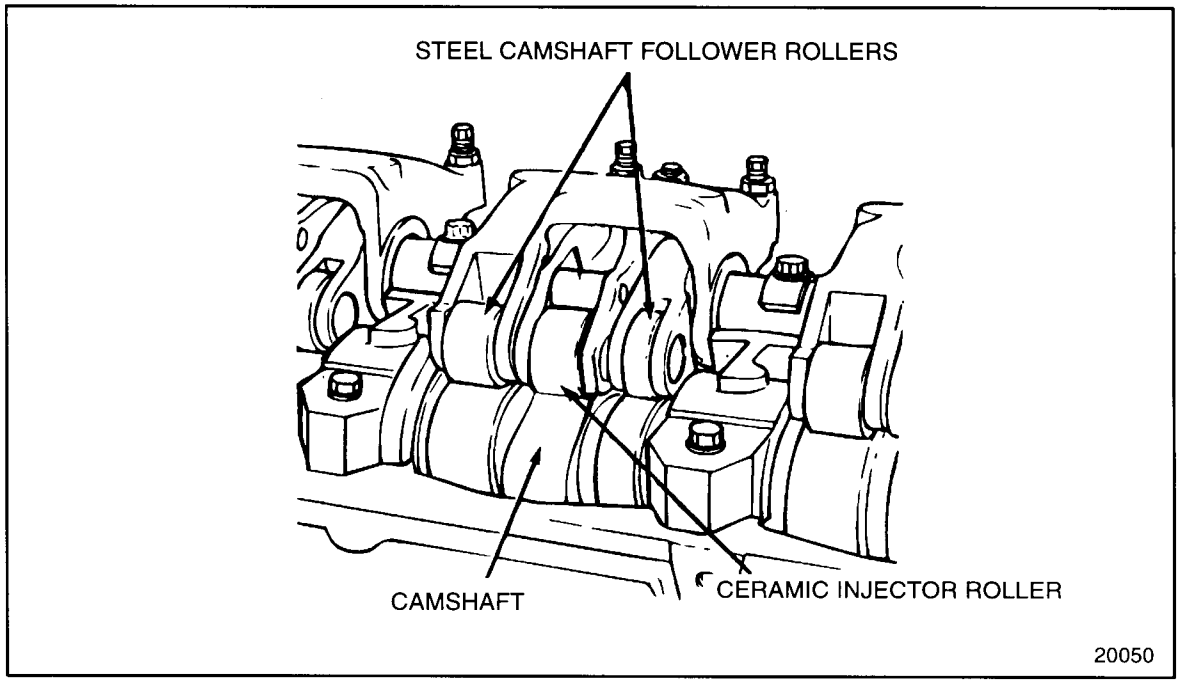

Figure 1-364 Camshaft and Related Parts

NOTE:
The Series 60G camshaft has no injector lobe on the cam.

The camshaft is supported by seven bearing assemblies, consisting of precision-type, replaceable bearing shell inserts that are split at their center lines. Current non-tin-plated production bearing shells are identified by their shiny aluminum color. Current tin-plated service bearing shells have a dull gray sheen. The lower bearing shell is positioned in a saddle that is integral with the cylinder head. The upper bearing shell is held in place by a machined camshaft cap. Upper and lower bearing shells are identical and have locating tangs and oil holes. Only the upper bearing shell oil holes index with oil supply holes in the camshaft caps. See Figure 1-365. These camshaft caps are precision line-bored after assembly to the cylinder head. Caps are NOT interchangeable once the head is finished. Caps are numbered and must NOT be interchanged with other caps of the same part number from stock or from a different cylinder head.

(Rev. 2004) *All information subject to change without notice.*
6SE483 0401 Copyright © 2004 DETROIT DIESEL CORPORATION

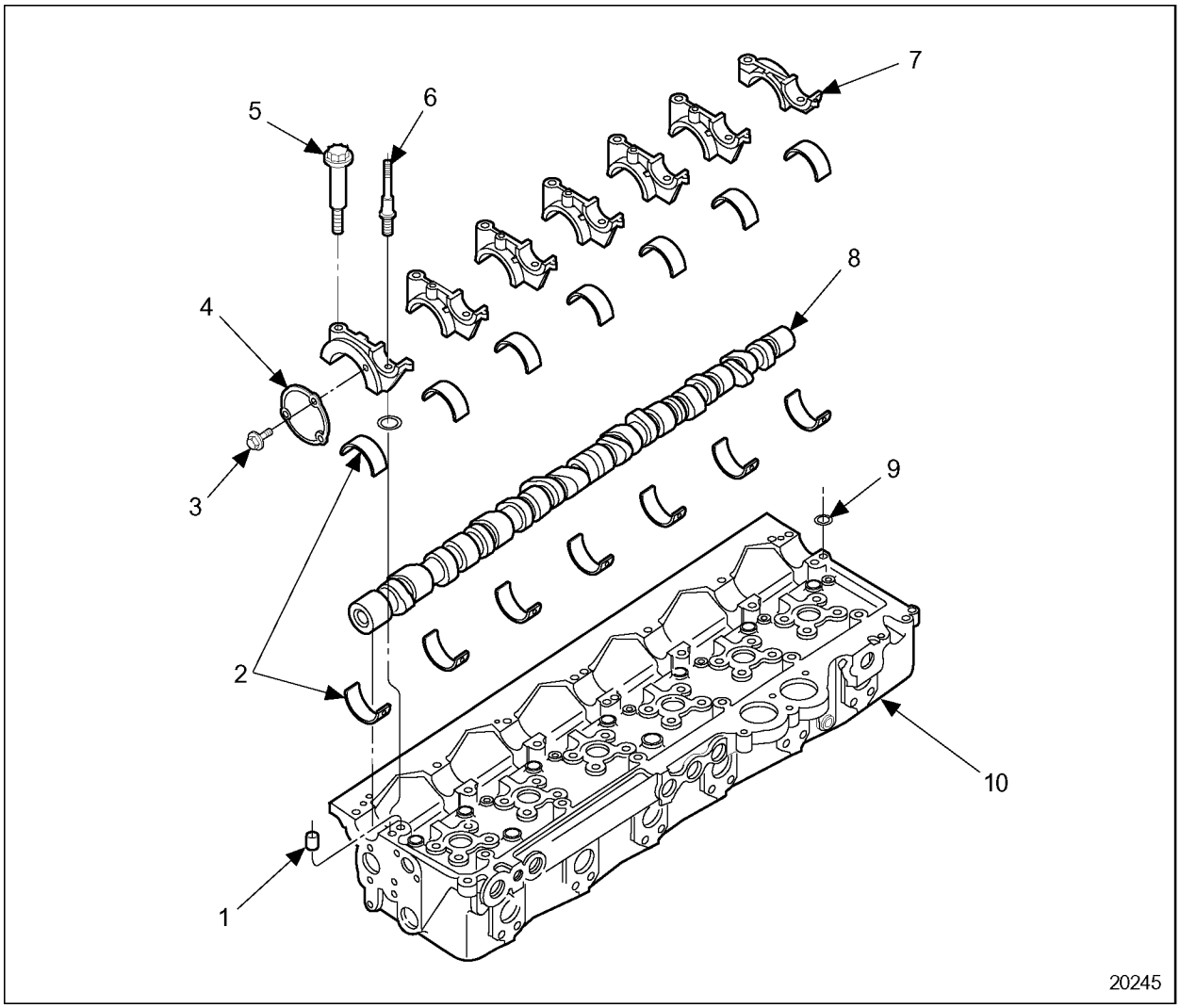

1. Dowel
2. Bearing Shells
3. Bolt, Camshaft Cover
4. Rear, Camshaft Access Cover
5. Bolt, Camshaft Cap (13)
6. Stud, Camshaft Cap (2)
7. Camshaft Cap
8. Camshaft
9. O-ring
10. Cylinder Head

Figure 1-365 Camshaft and Related Parts

 Copyright © 2004 DETROIT DIESEL CORPORATION

The No. 4 camshaft cap is secured to the cylinder head with three bolts; cap numbers 2, 3, 5, and 6 use two bolts each. Caps one and seven have a stud and one bolt each. The stud and nut arrangement on the end caps (1 and 7) allows rocker arm shaft removal without disturbing the gasket eliminator seal from the end camshaft caps to the cylinder head. There are four different camshaft cap configurations. Only the intermediate caps No. 2, 3, 5, and 6 are identical but must not be interchanged during re-assembly. See Figure 1-366.

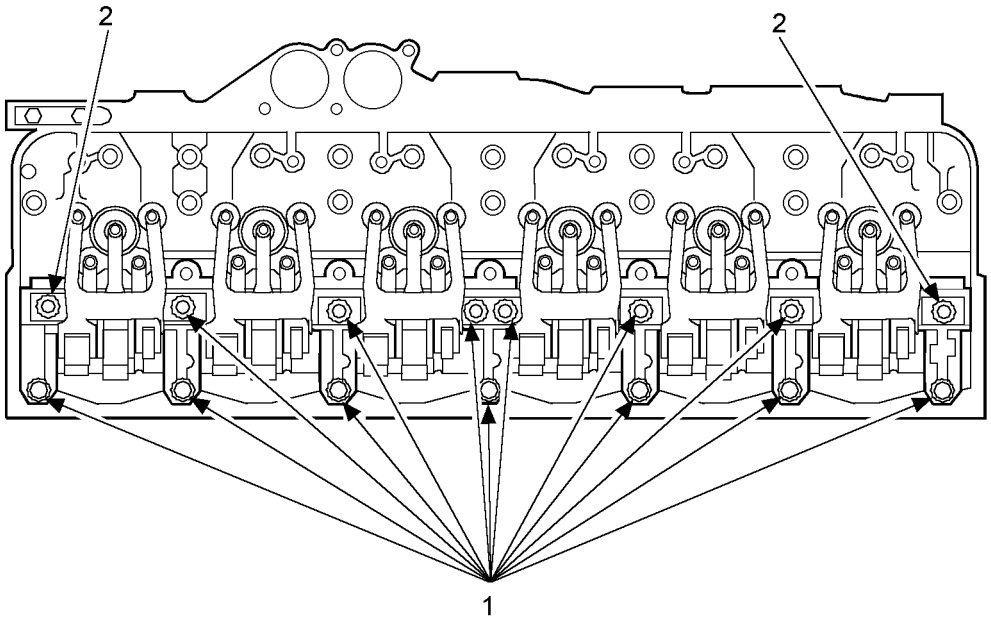

1. Camshaft Cap Bolt (13)
2. Camshaft Cap Stud and Nut (2)

Figure 1-366 Camshaft Bolt and Cap Location

The camshaft is driven by a camshaft drive gear, located in the gear case at the front of the engine and is driven, through a series of intermediate gears, by the crankshaft timing gear. Refer to section 1.22.2.1, for gear train information and camshaft drive gear lash measurement and adjustment procedures. See Figure 1-367.

(Rev. 2004) *All information subject to change without notice.*
6SE483 0401 Copyright © 2004 DETROIT DIESEL CORPORATION

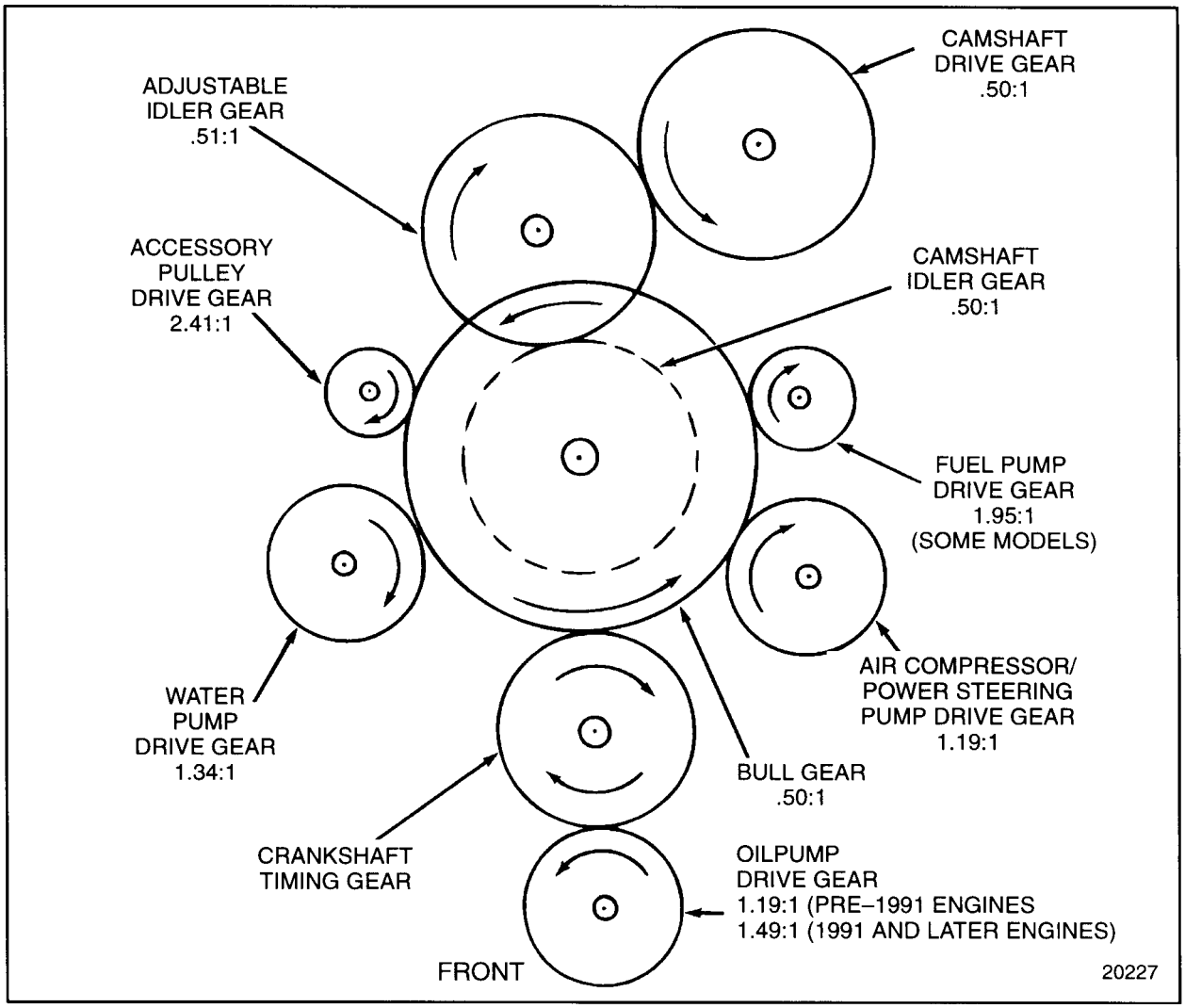

Figure 1-367 Engine Gear Train

 Copyright © 2004 DETROIT DIESEL CORPORATION

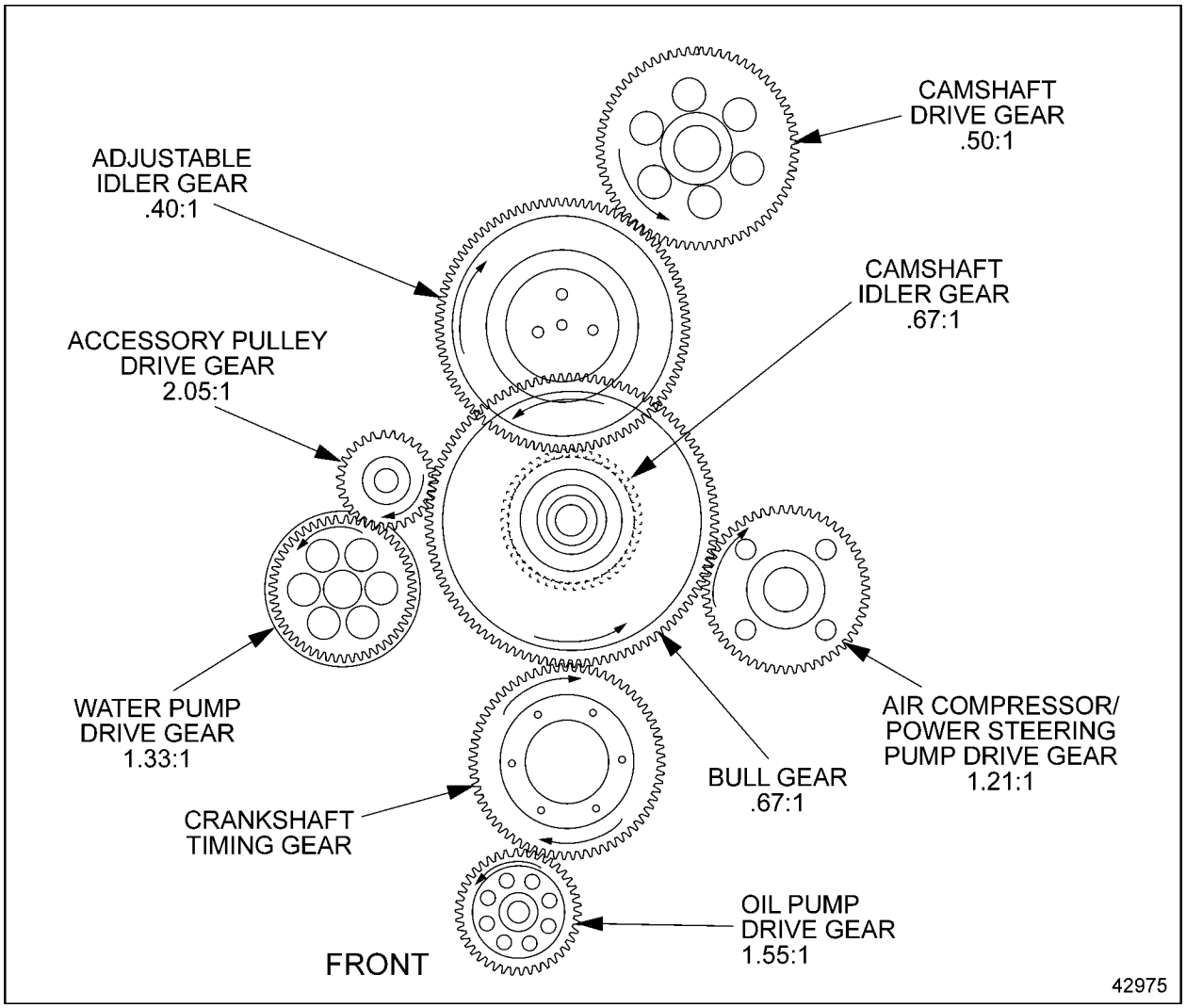

Figure 1-368 Series 60 2002 Engine Compact Gear Train Assembly

(Rev. 2004) *All information subject to change without notice.*
6SE483 0401 Copyright © 2004 DETROIT DIESEL CORPORATION

The camshaft drive gear is indexed to the camshaft drive gear hub by a Woodruff key and retained by a bolt which goes through the camshaft drive gear and hub and threads into the end of the camshaft. The camshaft has a dowel which indexes and fits into the mating hole in the camshaft hub. See Figure 1-369.

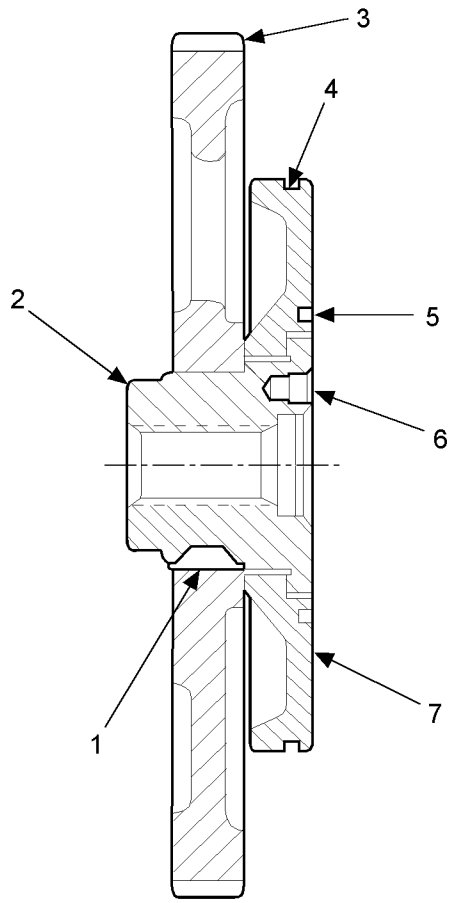

1. Woodruff Key
2. Camshaft Drive Gear Hub
3. Camshaft Drive Gear
4. O-ring Groove
5. Seal Groove
6. Camshaft Dowel Hole
7. Camshaft Thrust Plate

Figure 1-369 Cross-Section of Camshaft Drive Gear and Related Parts

 Copyright © 2004 DETROIT DIESEL CORPORATION

The camshaft hub is located in the camshaft thrust plate, which is positioned in an opening in the gear case housing. See Figure 1-370.

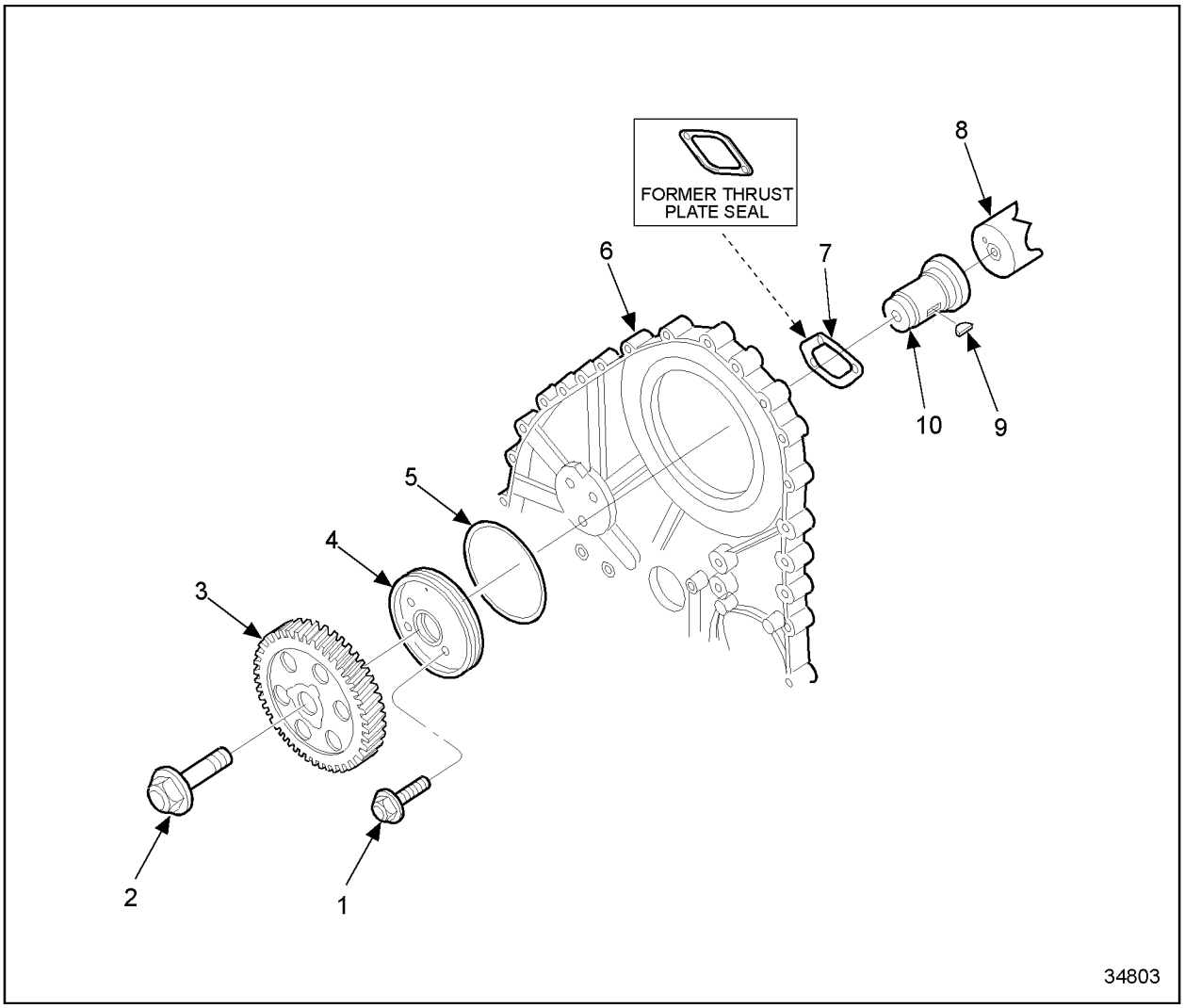

1. Bolt, Thrust Plate Retaining (2) or (3)
2. Bolt, Camshaft Hub Retaining
3. Drive Gear, Camshaft
4. Thrust Plate, Camshaft
5. O-ring
6. Gear Case
7. Seal, Thrust Plate
8. Camshaft
9. Key
10. Hub

Figure 1-370 Camshaft Thrust Plate and Related Parts

(Rev. 2004) *All information subject to change without notice.*
6SE483 0401 Copyright © 2004 DETROIT DIESEL CORPORATION

Access openings are provided in the gear case cover for camshaft drive gear lash adjustment and camshaft retaining bolt removal. See Figure 1-371.

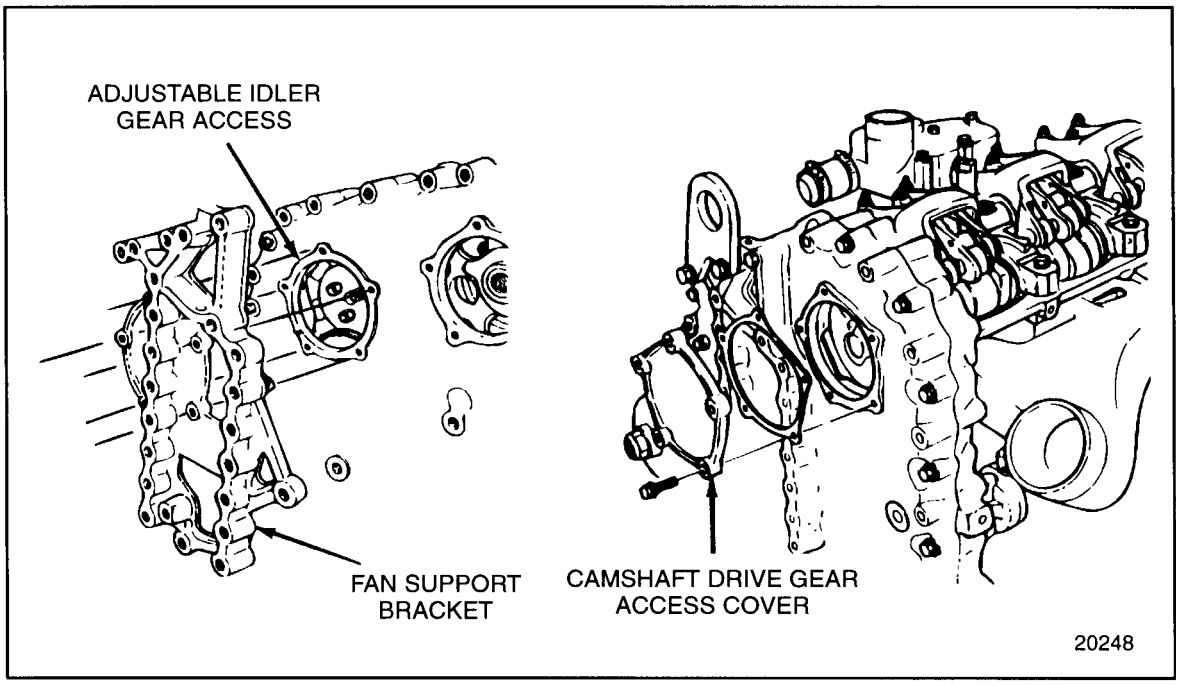

Figure 1-371 Camshaft Drive Gear Access Cover and Adjustable Idler Gear Access

 Copyright © 2004 DETROIT DIESEL CORPORATION

A cover is provided at the rear end of the camshaft and is secured to the No. 7 camshaft bearing cap and the cylinder head by three bolts. See Figure 1-372.

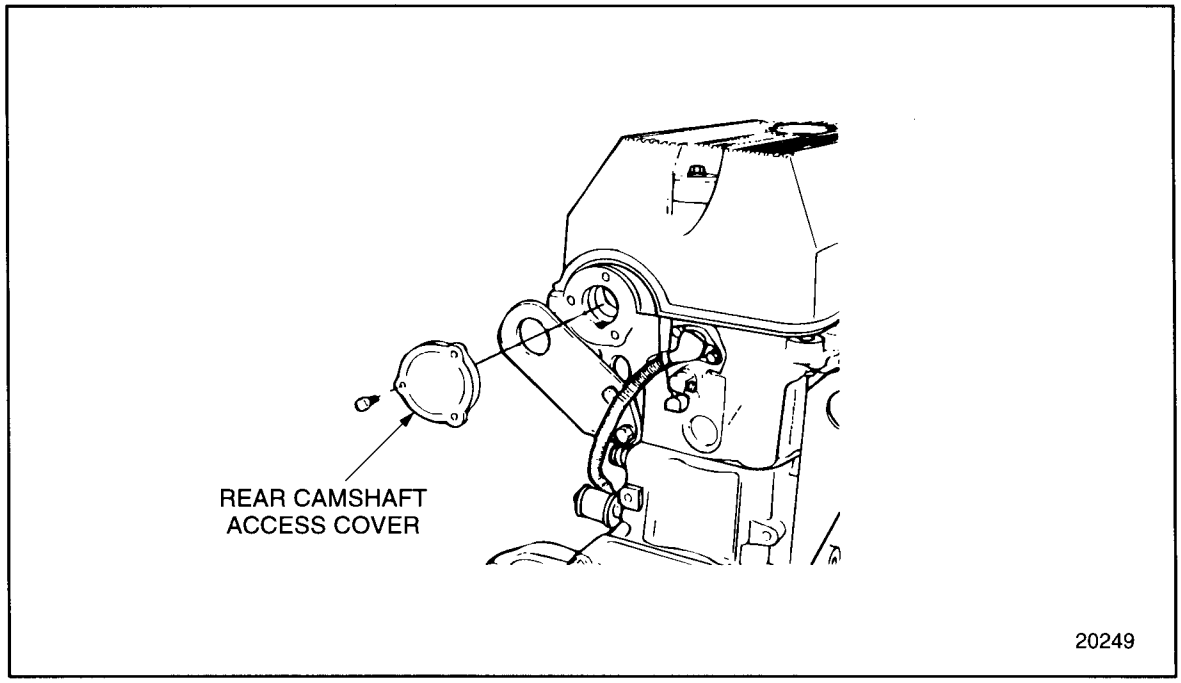

Figure 1-372 Rear Camshaft Access Cover

Vertical oil passages at the front and rear of the cylinder head deliver oil from the cylinder block front and rear oil galleries to the No. 1 and 7 lower camshaft bearing saddles. From there, the oil is directed upward (through the enlarged stud hole) to the No. 1 and 7 upper bearing caps. A drilled passage in each of these caps exits at the rocker arm shaft seat area, where it indexes with a hole in each rocker arm shaft. The rocker arm shafts have internal oil passages that deliver oil to the rocker arm bushings and intermediate upper camshaft bearings. Some of the oil supplied to the rocker arm bushing passes through the oil hole in the bushing to the rocker arm. The rocker is drilled to supply oil to the camshaft follower, roller pin, and bushing. The rocker is also drilled to supply oil to the valve adjusting screw, valve button, retainer clip, intake, and exhaust valve stems and the fuel injector follower. The No. 4 camshaft cap is "Y" drilled, forming an oil path connection between the front and rear rocker arm shafts, to ensure complete lubrication. See Figure 1-373.

(Rev. 2004) *All information subject to change without notice.*
6SE483 0401 Copyright © 2004 DETROIT DIESEL CORPORATION

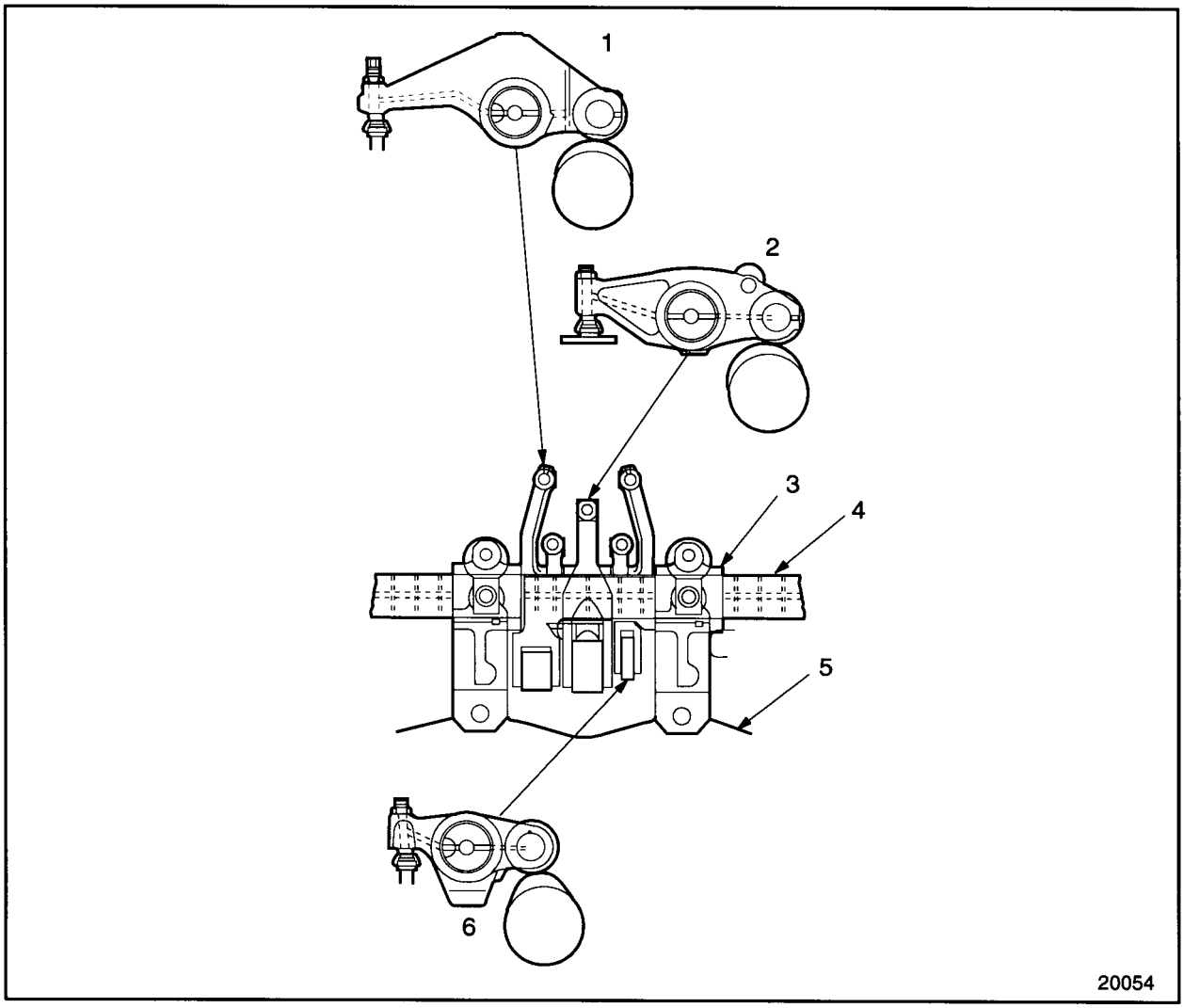

1. Rocker Arm, Exhaust Valve
2. Rocker Arm, Fuel Injector
3. Camshaft Cap
4. Rocker Arm Shaft
5. Cylinder Head
6. Rocker Arm, Intake Valve

Figure 1-373 Cylinder Head Lubrication Schematic

 Copyright © 2004 DETROIT DIESEL CORPORATION

1.24.1 Repair or Replacement of Camshaft and Camshaft Bearing

To determine if repair or replacement of the camshaft and camshaft bearings is necessary, perform the following procedure. See Figure 1-374.

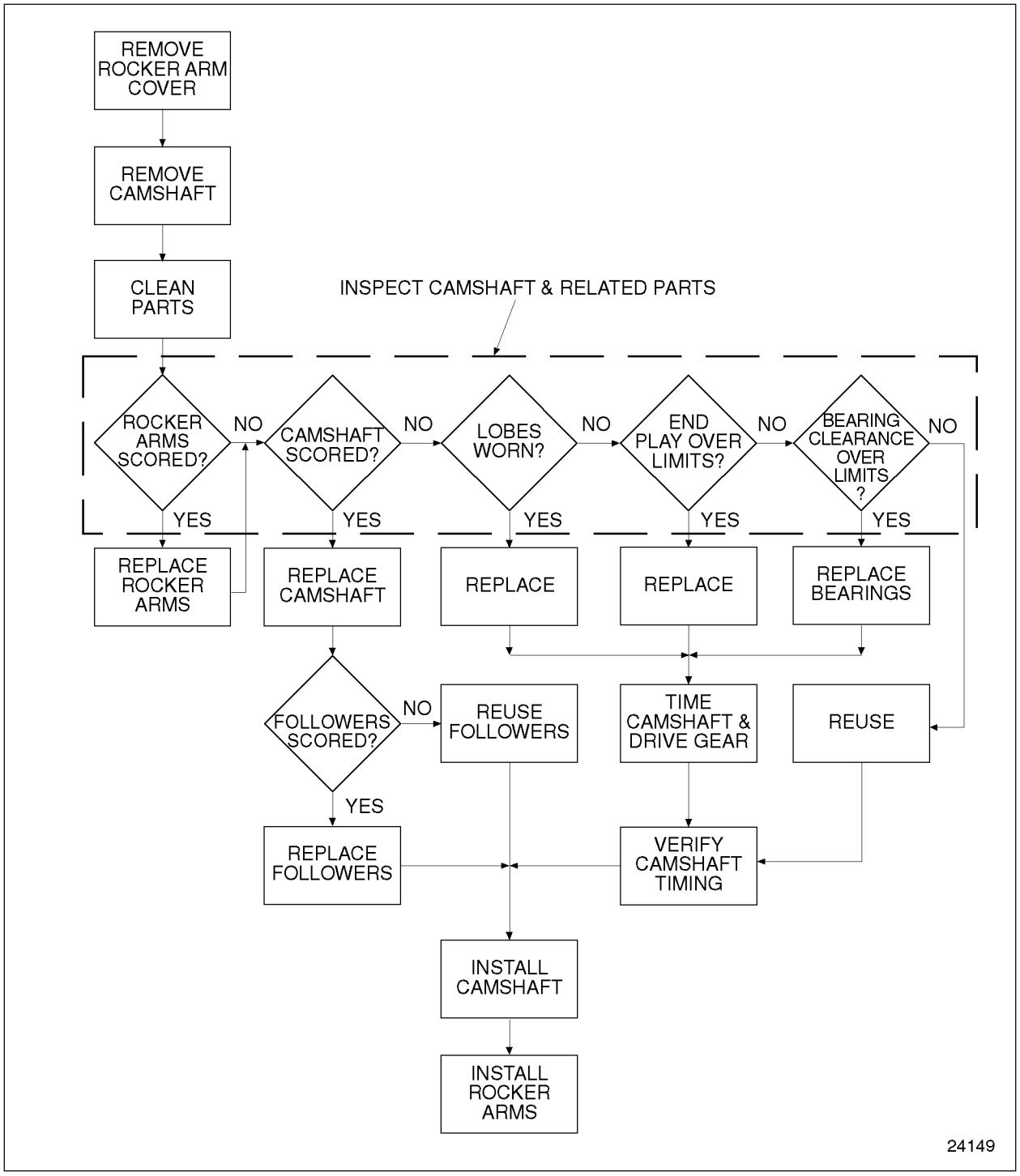

Figure 1-374 Flowchart for Repair or Replacement of Camshaft and Related Parts

(Rev. 2004) *All information subject to change without notice.*
6SE483 0401 Copyright © 2004 DETROIT DIESEL CORPORATION

1.24.2 Removal of Camshaft and Camshaft Bearing

Removal of camshaft and camshaft bearings as follows:

1. Remove the valve rocker cover. Refer to section 1.6.2(one-piece), refer to section 1.6.3(two-piece), refer to section 1.6.5(three-piece).
2. Remove the five bolts that secure the camshaft drive gear access cover to the gear case. See Figure 1-371.
3. Remove both rocker arm shaft assemblies. Refer to section 1.3.2.

NOTICE:
Only special tool, J 35652, should be used to hold the camshaft drive gear stationary while loosening or tightening the camshaft drive gear-to-camshaft bolt. Other tools or devices can cause engine damage.

4. Insert the shoe of the camshaft drive gear torque holding tool, J 35652, through a lightening hole of the camshaft drive gear.
5. Bar the engine over slightly to position the camshaft drive gear holding tool so that the bolt holes in the holding tool align with the access cover bolt holes in the gear case cover, using the 3/4 in. square hole in the center of the crankshaft pulley.
6. Install J 35652to the gear case, engaging one of the lightening holes in the camshaft drive gear. Use two of the access cover bolts to secure the tool to the gear case. See Figure 1-375.

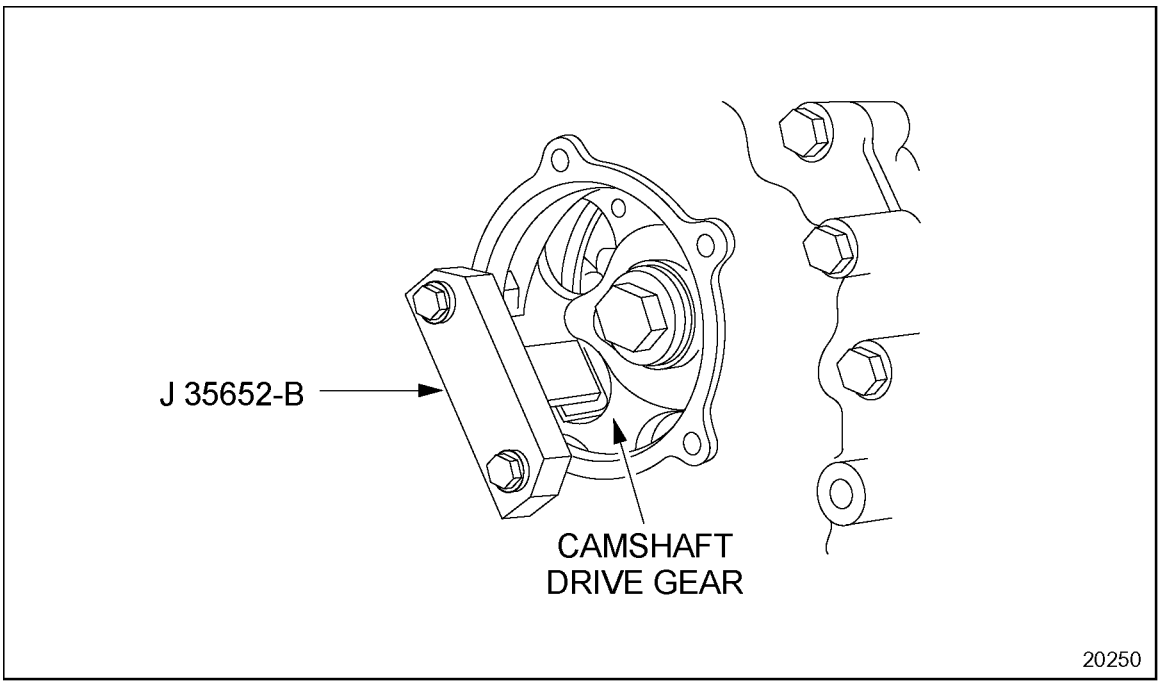

Figure 1-375 Camshaft Drive Gear Torque Holding Tool Installation

 Copyright © 2004 DETROIT DIESEL CORPORATION

7. Use a long 3/4 in. drive breaker bar and a 27 mm impact socket to remove the camshaft drive gear-to-camshaft bolt.
8. Remove the camshaft drive gear torque holding tool from the gear case.
9. Rotate the crankshaft, using the square hole in the middle of the crankshaft pulley, to align the lightening holes in the camshaft drive gear to the camshaft thrust plate mounting bolts.
10. Remove the camshaft thrust plate mounting bolts carefully, to avoid dropping them into the gear case. The current plate uses three bolts, the former plate requires two bolts. See Figure 1-376.

NOTE:
A clean shop towel may be inserted into the gear case opening to trap the bolts in case they are dropped. Do not allow the shop towel to drop into the gear case.

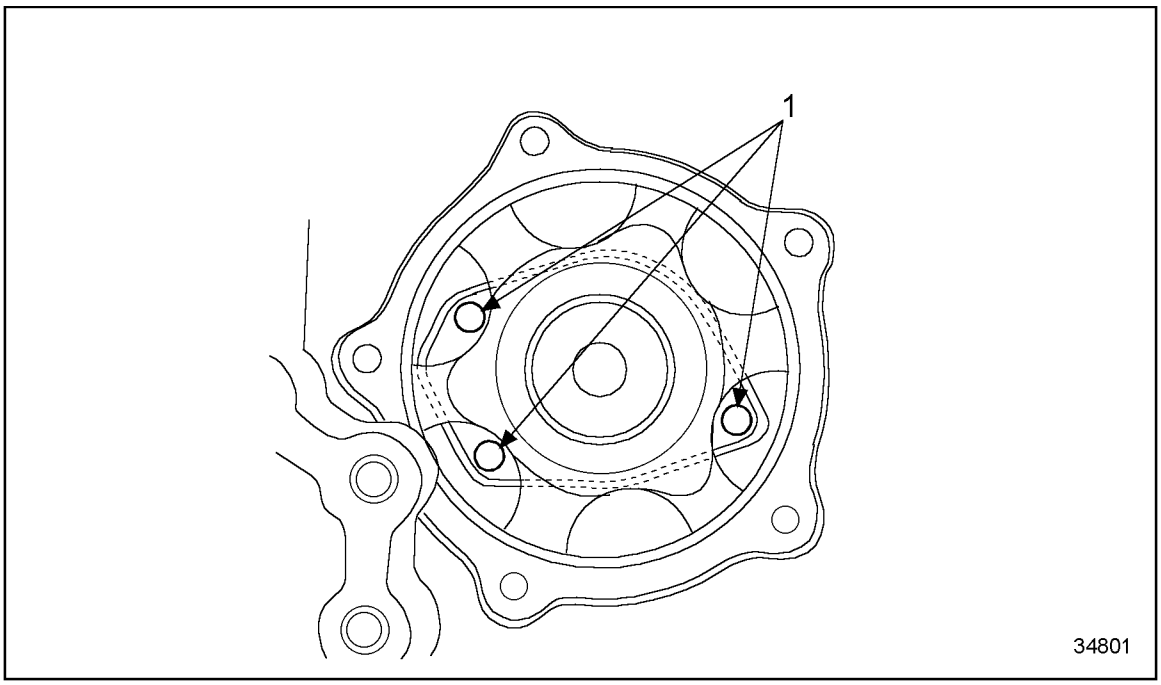

1. Camshaft Thrust Plate Mounting Bolt Locations

Figure 1-376 Camshaft Thrust Plate Mounting Bolt Locations

(Rev. 2004) *All information subject to change without notice.*
6SE483 0401 Copyright © 2004 DETROIT DIESEL CORPORATION

11. Install J 35906, to the camshaft drive gear access opening, using three of the access cover bolt holes. Engage the puller screw in the threads of the camshaft drive gear hub, until the screw is tight. See Figure 1-377.

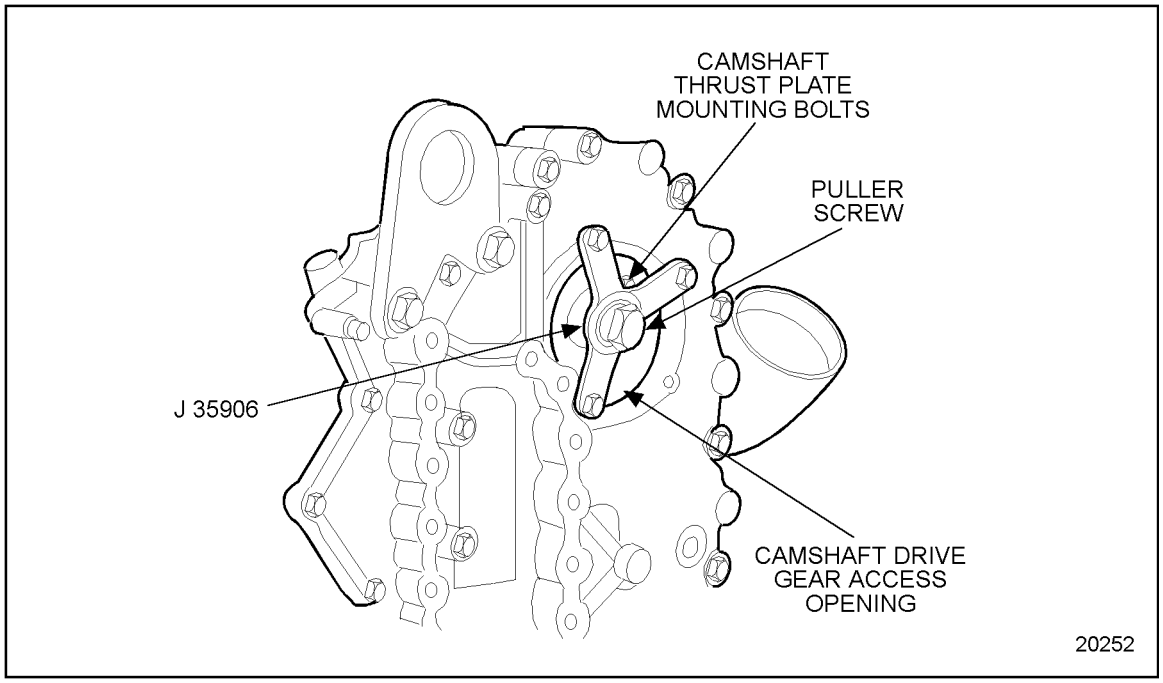

Figure 1-377 Camshaft Thrust Plate Remover

 Copyright © 2004 DETROIT DIESEL CORPORATION

12. Continue turning the puller screw to pull the camshaft drive gear hub and thrust plate forward approximately 6-7 mm (1/4 in.) until the thrust plate seal is clear of the camshaft front bearing cap and cylinder head. See Figure 1-378.

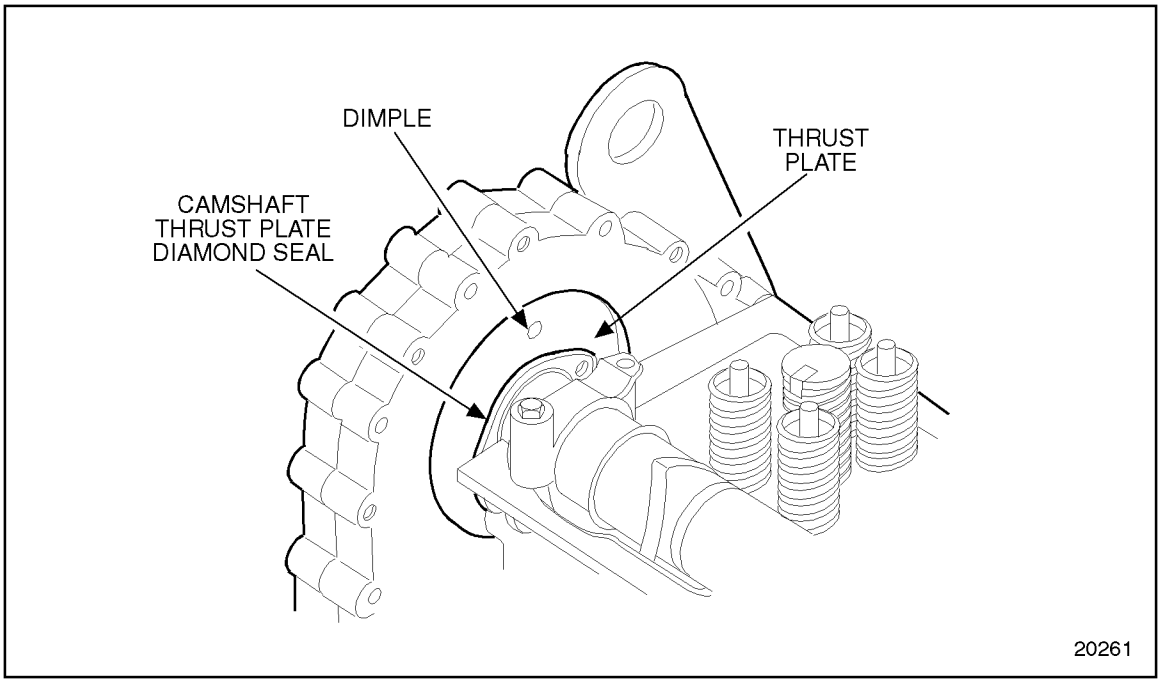

Figure 1-378 Camshaft Thrust Plate Clearance

13. Remove the three bolts that secure the rear camshaft cover to the engine and remove the cover.

(Rev. 2004) *All information subject to change without notice.*
6SE483 0401 Copyright © 2004 DETROIT DIESEL CORPORATION

14. Remove the remaining seven camshaft cap bolts. Remove the No. 1 and 7 studs using socket tool, J 36003 part of J 36003–A. See Figure 1-379.

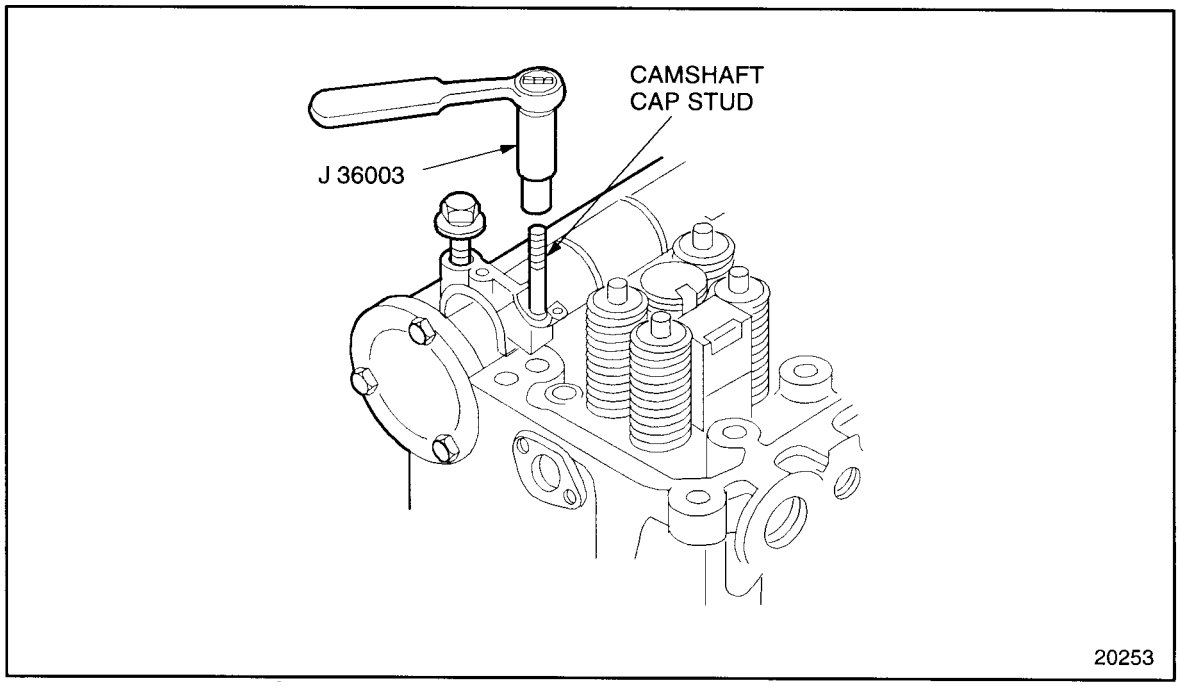

Figure 1-379 Camshaft Cap Stud Removal

15. Remove the seven camshaft bearing caps and the upper bearing shells. Keep the caps and shells together for possible later installation. Tag the bearing cap location, as they must always be installed in the same location.
16. The camshaft gear pilot tool will remain in place, holding the camshaft drive gear in contact with the adjustable idler gear, to prevent accidental disengagement. This arrangement makes it unnecessary to re-time the gear train.

NOTE:
The camshaft gear can go out of time if the pilot tool is removed.

17. Slide the camshaft rearward to completely disengage the dowel from the hub. Lift out the camshaft.
18. Remove the lower camshaft bearing shells, and group them with the upper shells and caps for possible reuse.

The Series 60 2002 Engine has a new Compact Geartrain Assembly. Camshaft, Camshaft Drive Gear and Camshaft Gear Cover will be removed as an assembly.

For engines equipped with the Compact Geartrain Assembly remove camshaft as follows.

1. Rotate the engine by hand to get the No. 1 piston at TDC. Do this by installing the crankshaft timing pin J 45947 into its braket and barring the engine over by hand until the

 Copyright © 2004 DETROIT DIESEL CORPORATION

timing pin drops into the locating hole in the crankshaft, the engine is now at TDC on cylinder No.1. See Figure 1-380.

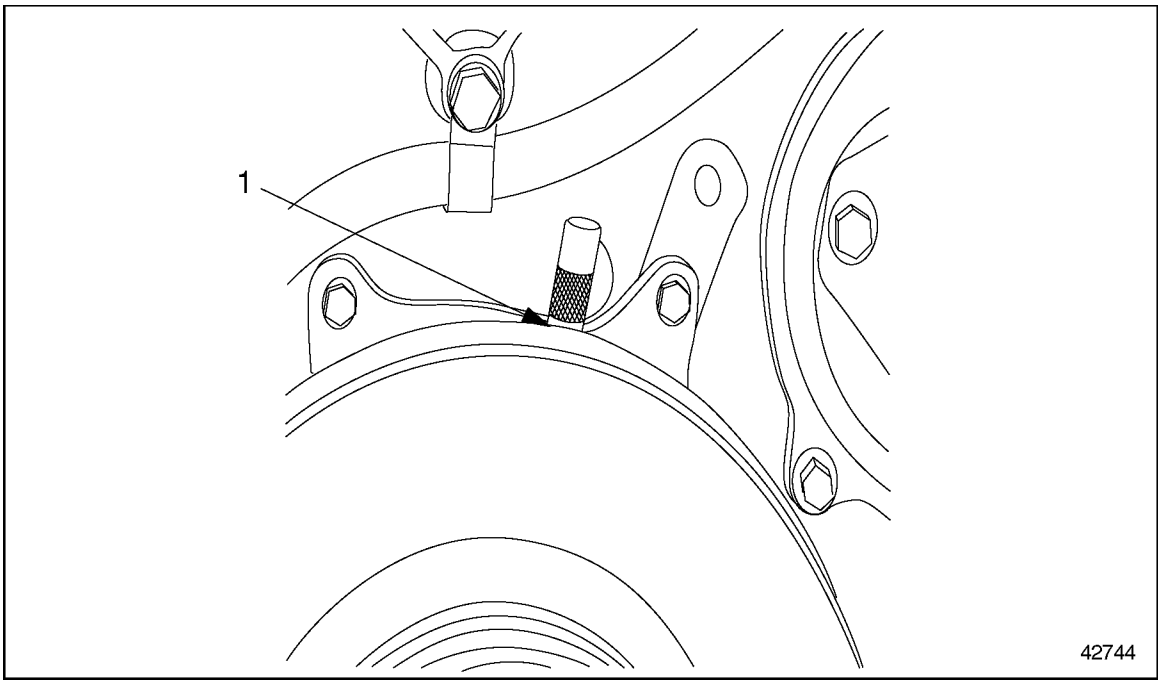

1. Timing Pin

Figure 1-380 Crankshaft Timing Pin

2. Remove the five bolts for the camshaft gear cover inspection plate and remove the plate. To verify camshaft timing proceed as follows:
   [a] Look at the timing hole in the camshaft gear.
   [b] The timing hole should be aligned with the timing hole in the back of the gear cover, located at the 5 o'clock position. See Figure 1-381.

(Rev. 2004) *All information subject to change without notice.*
6SE483 0401 Copyright © 2004 DETROIT DIESEL CORPORATION

[c] If the timing holes are not aligned correctly remove the crankshaft timing pin and rotate the engine one more complete revolution . When the timing pin drops back into the hole in the crankshaft check the timing of the camshaft. Refer to step 2.

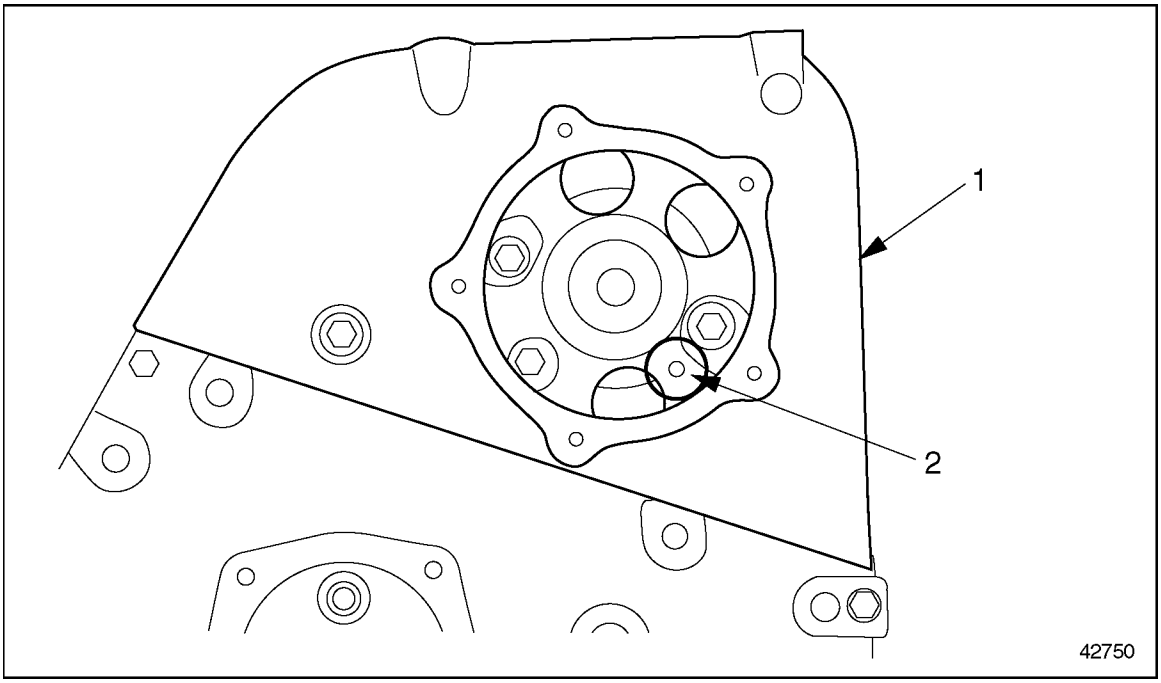

1. Camshaft Gear Cover
2. Timing Hole

Figure 1-381 Timing Verification

 Copyright © 2004 DETROIT DIESEL CORPORATION

3. Remove bolt from front of camshaft gear cover. See Figure 1-382.

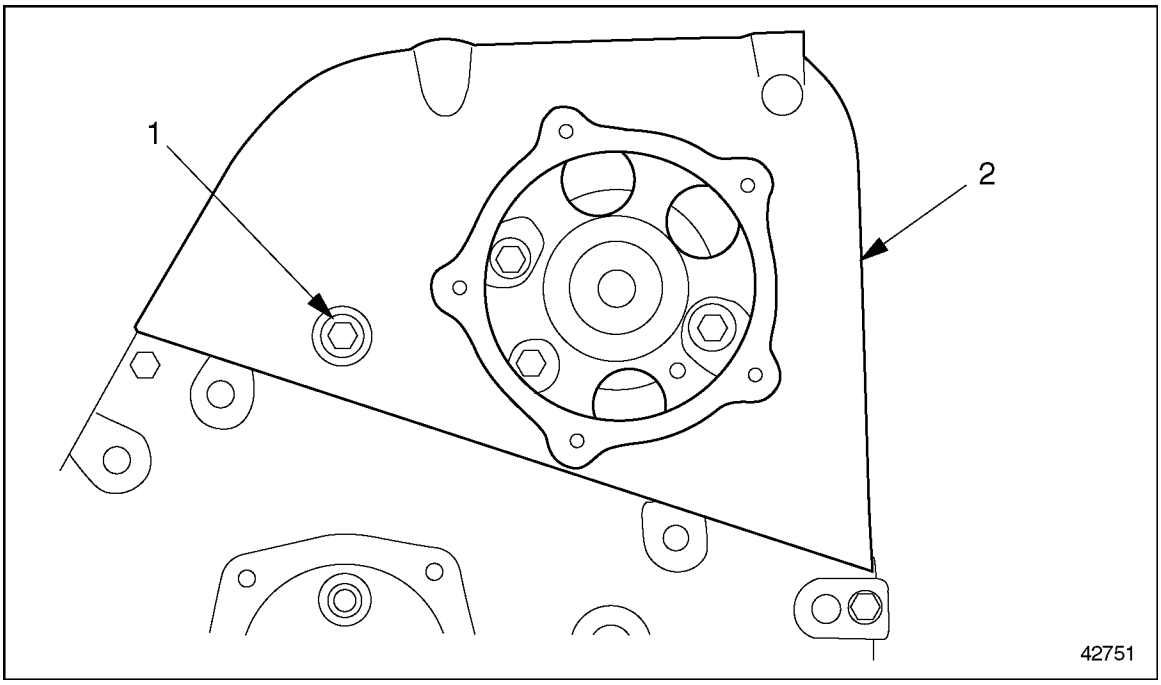

1. Bolt
2. Camshaft Gear Cover

Figure 1-382 Camshaft Gear Cover Bolt

NOTE:
If timing is correct and the repair being made does not require that the engine is turned over, clean off an area where the camshaft gear and idler gear teeth mesh and mark the teeth with a suitable marker for a reference point when reassembling the camshaft. This procedure will make assembly easier.

(Rev. 2004) *All information subject to change without notice.*
6SE483 0401 Copyright © 2004 DETROIT DIESEL CORPORATION

4. Remove four camshaft gear cover bolts. See Figure 1-383.

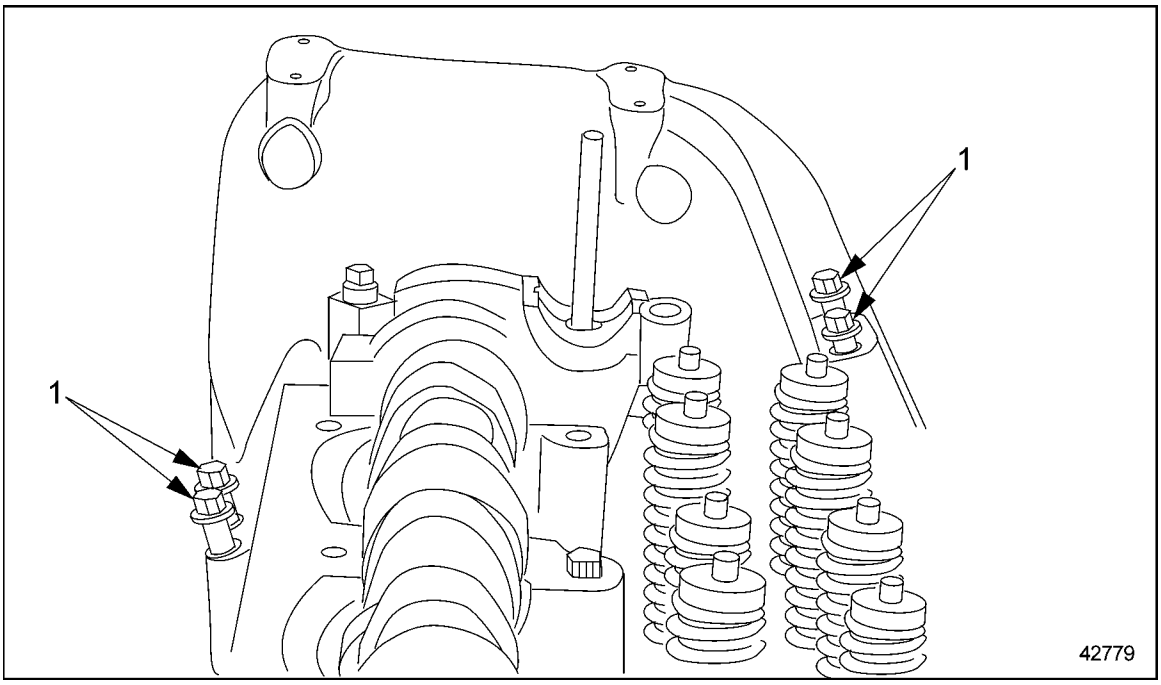

1. Bolt

Figure 1-383 Camshaft Gear Cover Bolts

 Copyright © 2004 DETROIT DIESEL CORPORATION

5. Remove three bolts inside of camshaft gear cover. See Figure 1-384.

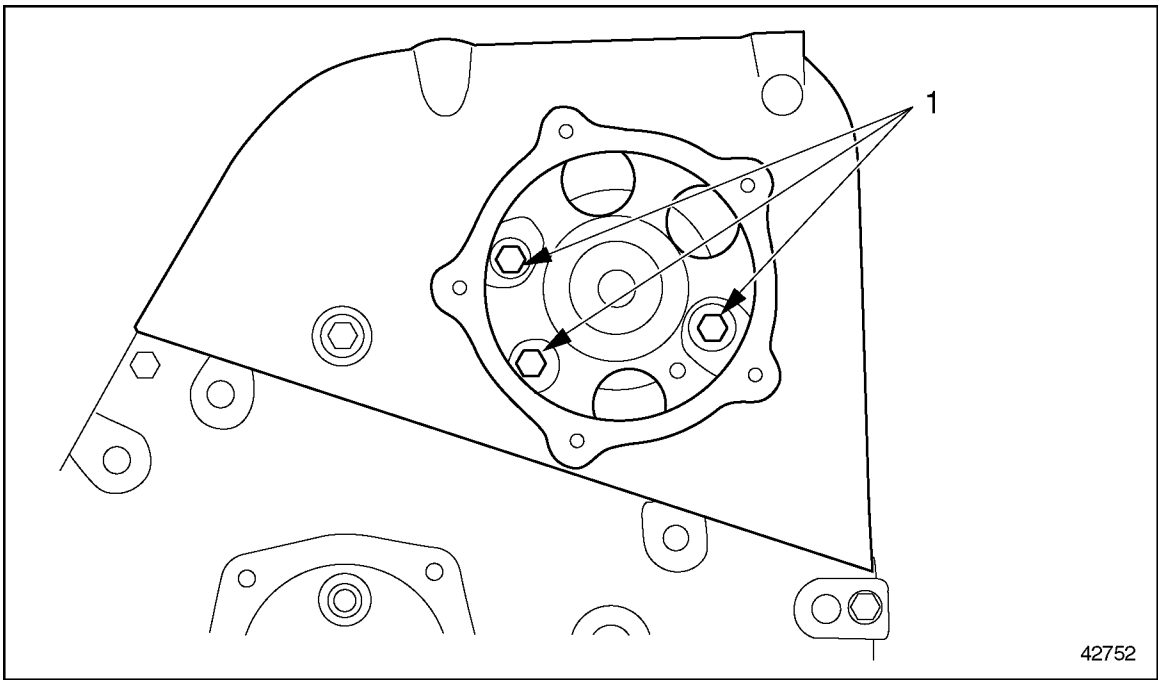

1. Bolt

Figure 1-384 Camshaft Gear Cover Bolts

(Rev. 2004) *All information subject to change without notice.*
6SE483 0401 Copyright © 2004 DETROIT DIESEL CORPORATION

6. Remove one bolt and one stud bolt from camshaft caps No. 1 and 7, remove camshaft caps. See Figure 1-385.

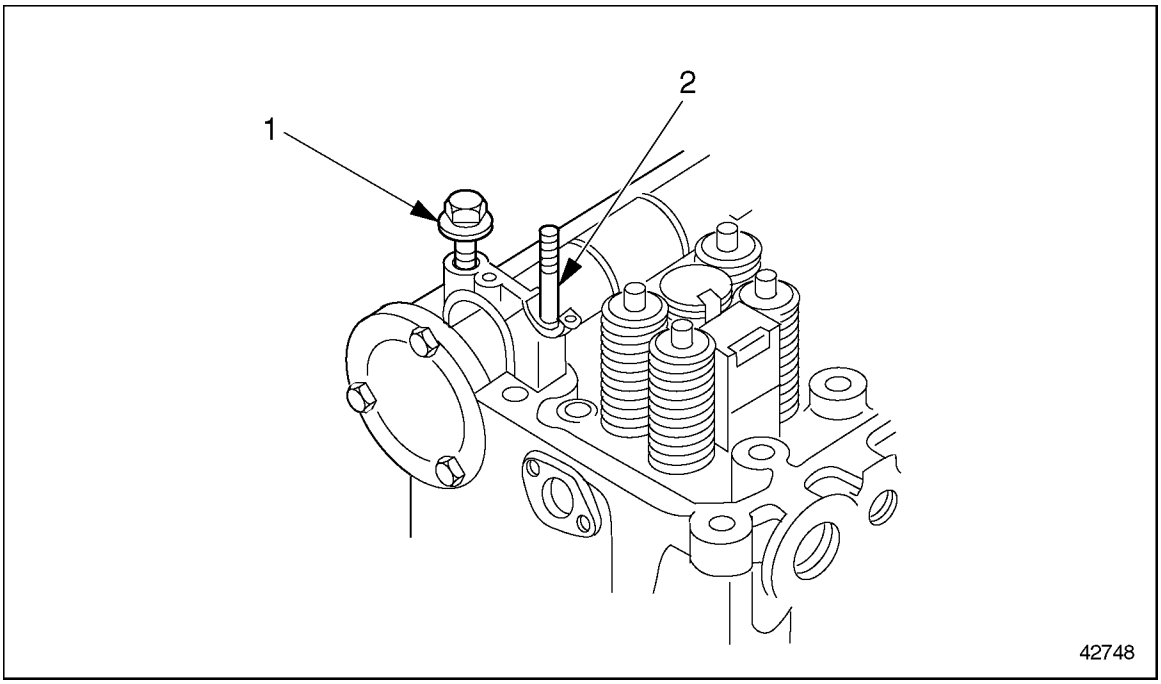

1. Bolt 2. Stud Bolt

Figure 1-385 Camshaft Cap Bolt and Stud Bolt

7. Remove the remaining five camshaft cap bolts, and camshaft caps.

CAUTION:

To avoid injury when removing or installing a heavy engine component, ensure the component is properly supported and securely attached to an adequate lifting device to prevent the component from falling.

8. Lift camshaft and camshaft gear cover assembly from camshaft bearings and gear case. Use lifting tool J 46305 to assist in lifting camshaft gear cover assembly.

 Copyright © 2004 DETROIT DIESEL CORPORATION

1.24.3 Disassembly of Camshaft and Camshaft Bearing

Refer to section 1.25.2 for disassembly of camshaft drive gear, camshaft hub and thrust plate assembly.

NOTE:
Disassembly of camshaft and drive gear assembly is not required for inspection. Disassembly will require timing of the camshaft gear again.

For Series 60 engines equipped with Compact Gear Train Assembly disassemble camshaft from the camshaft gear as follows.

1. Use suitable fixture to secure the camshaft assembly from movement.
2. Install a heavy duty gear puller capable of withstanding the 7000 PSI required to remove the gear from the camshaft. Support the backside of the camshaft gear cover as close to the camshaft as possible to prevent damaging the gear cover and gently press the camshaft off the gear holding the camshaft as it is pressed through the gear. Removing the camshaft gear and cover together.

NOTICE
Extreme care must be taken **not** to support the camshaft gear cover at the outer edges.

1.24.3.1 Inspection of Camshaft and Camshaft Bearing

Inspect camshaft and camshaft bearings as follows:

1. Clean all of the removed parts in clean fuel oil.
2. Ensure all oil passages are clear.

⚠ CAUTION:
To avoid injury from flying debris when using compressed air, wear adequate eye protection (face shield or safety goggles) and do not exceed 40 psi (276 kPa) air pressure.

3. Dry with compressed air.
4. Inspect the rocker arm components for scoring. Refer to section 1.3.2.2.
5. Replace damaged rocker arm components.
6. Inspect the camshaft lobes and journals for scoring, pitting, or flat spots.

NOTE:
Camshafts may exhibit surface pits on the exhaust lobes. See Figure 1-386. Extensive durability and field testing has shown that surface pits on the exhaust lobes can occur early in the operation of the engine. These blemishes do not adversely affect engine

(Rev. 2004) *All information subject to change without notice.*
6SE483 0401 Copyright © 2004 DETROIT DIESEL CORPORATION

performance or the durability of the camshaft and followers. Camshafts with this condition may be reused.

 Copyright © 2004 DETROIT DIESEL CORPORATION

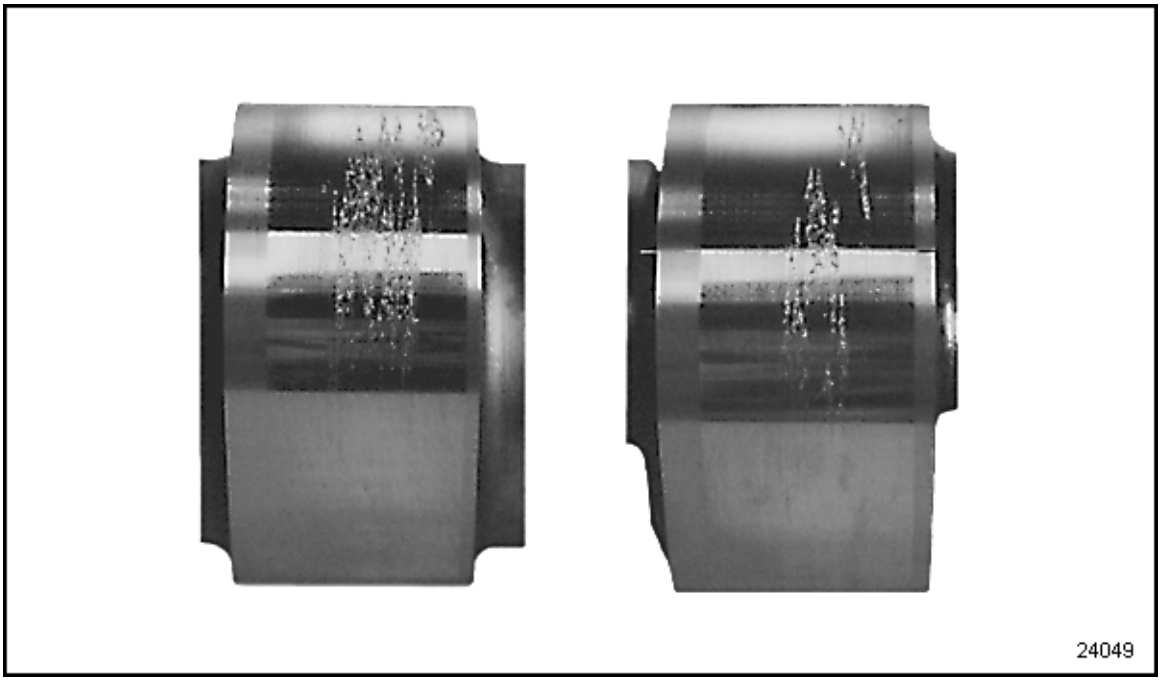

Figure 1-386 Camshafts Acceptable for Reuse

NOTE:
Camshafts exhibiting extensive wear and pitting must be replaced. See Figure 1-387.

Figure 1-387 Camshafts Not Acceptable for Reuse

(Rev. 2004) *All information subject to change without notice.*
6SE483 0401 Copyright © 2004 DETROIT DIESEL CORPORATION

7. If the camshaft is scored, inspect the camshaft follower rollers.
8. Replace damaged camshaft followers.
9. If there is a doubt as to the acceptability of the camshaft for further service, determine the extent of camshaft lobe wear as follows:

NOTE:
The camshaft can be in or out of the engine during this procedure.

[a] Using a feeler gage, 0.038-0.254 mm (0.0015 -0.010 in.) and a piece of square, hard material 3 x 10 x 25 mm (1/8 in. x 3/8 in. x 1 in.), measure the flat on the injector rise side of the camshaft lobes and nose of valve lobes. See Figure 1-388.

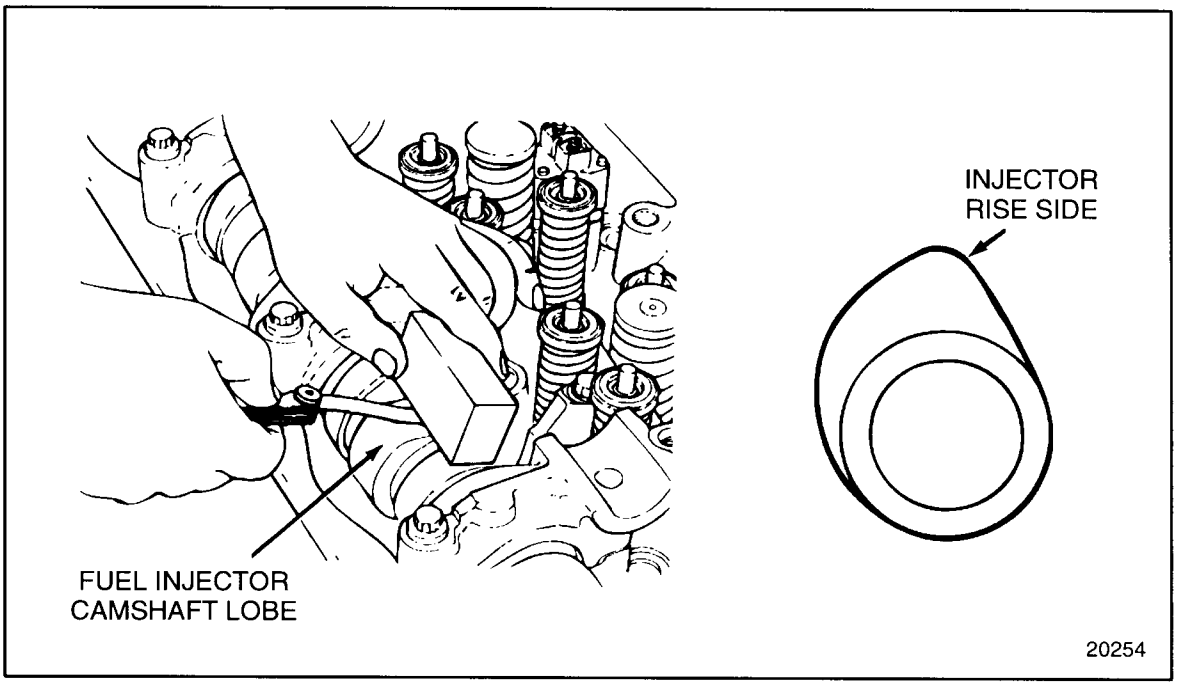

Figure 1-388 Checking Camshaft Lobe Wear

[b] If the flats measure greater than 0.076 mm (0.003 in.) in depth and there are no other camshaft defects, replace the camshaft.

[c] Inspect the camshaft bearings for signs of excessive wear, scoring or pitting.

[d] Replace camshaft bearings as necessary.

NOTE:
If one camshaft bearing needs to be replaced, replace both of the camshaft bearing shells.

 Copyright © 2004 DETROIT DIESEL CORPORATION

[e] Check the camshaft bearing clearance using plastic gaging material under each upper shell.

NOTE:
Check camshaft bearing clearance with bearing shells, camshaft, bearing caps and rocker arm shafts (without rocker assemblies in place) installed, and cap bolts, studs and nuts tightened to specification.

[f] Allowable clearance is 0.09 - 0.166 mm (0.0035 -0.0065 in.) or a maximum of 0.191 mm (0.0075 in.) with used parts.

[g] Replace excessively worn or scored parts.

[h] After completing the camshaft bearing clearance measurements, remove the rocker arm shafts, bearing caps, camshaft, and camshaft bearings. Keep the caps and shells together for possible reuse.

[i] Clean all of the plastic gaging material from the bearing shells and camshaft journals if used parts are to be reused.

[j] Remove all of the Gasket Eliminator from both the cylinder head and camshaft caps. Refer to section "Cleaning" in the "General Information" section at the beginning of this manual.

[k] Coat the No. 1 and 7 bearing shell inserts with clean engine oil and install them to their respective locations in the cylinder head and camshaft caps.

[l] Install the camshaft to its normal position in the bearing saddles. Install the No. 1 and 7 camshaft caps to the cylinder head.

[m] Install the No. 1 and 7 camshaft cap outboard bolts and inboard studs and torque, using tool J 36003 part of J 36003–A to the studs to 128–148 N·m (94–109 lb·ft).

(Rev. 2004) *All information subject to change without notice.*
6SE483 0401 Copyright © 2004 DETROIT DIESEL CORPORATION

[n] Using a dial indicator with magnetic base, check the run-out of the camshaft at the No. 4 bearing journal. See Figure 1-389.

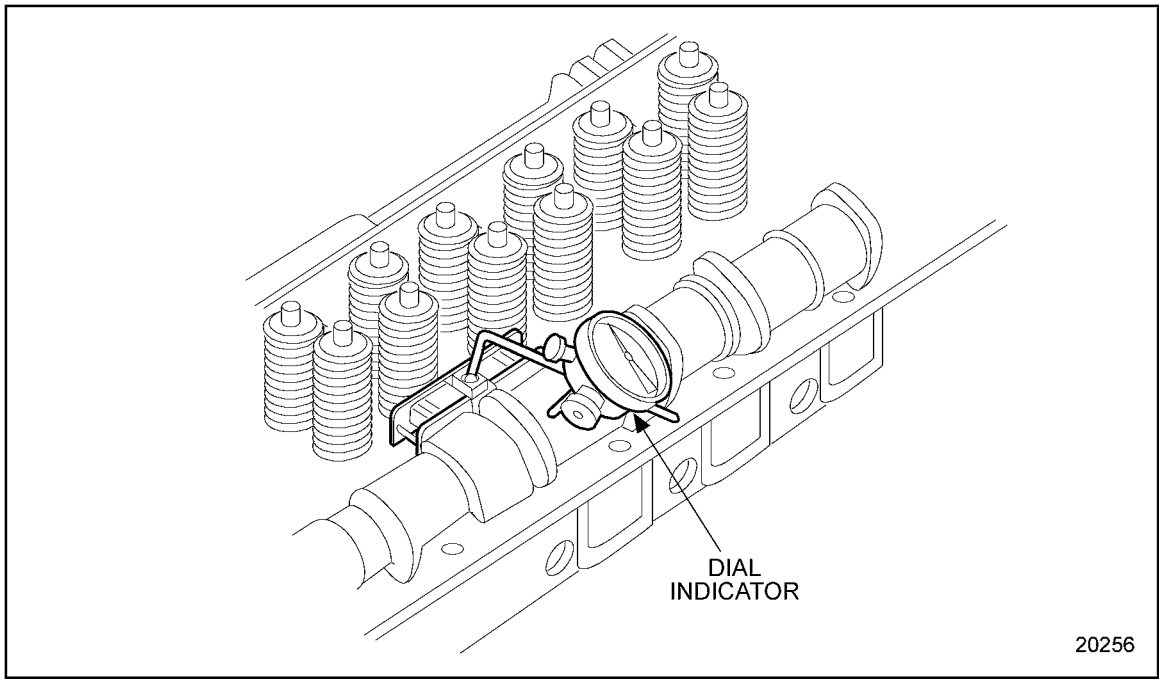

Figure 1-389 Camshaft Run-out Measurement

[o] If camshaft run-out exceeds 0.050 mm (0.002 in.), replace the camshaft.

 Copyright © 2004 DETROIT DIESEL CORPORATION

1.24.4 Assembly of Camshaft and Camshaft Bearing

Refer to section 1.25.3 for assembly of camshaft drive gear, camshaft hub and thrust plate assembly.

1.24.5 Installation of Camshaft and Camshaft Bearing

Install the camshaft and camshaft bearings as follows:

1. Coat the lower camshaft bearing shells with clean engine lubricating oil, and install them to their original positions. Note the position of oil holes and locating tangs.

NOTE:
If new bearings are to be installed, the upper and lower shells MUST be replaced as a set.

CAUTION:

To avoid injury from flying debris when using compressed air, wear adequate eye protection (face shield or safety goggles) and do not exceed 40 psi (276 kPa) air pressure.

2. When installing a new camshaft, steam clean it to remove the rust preventive and blow dry with compressed air.

(Rev. 2004) *All information subject to change without notice.*
6SE483 0401 Copyright © 2004 DETROIT DIESEL CORPORATION

3. Before installing the camshaft dowel into the camshaft hub, ensure that the dimple in the thrust plate is located at the 12 o'clock position to properly position bolt holes to cam cap and cylinder head. See Figure 1-390.

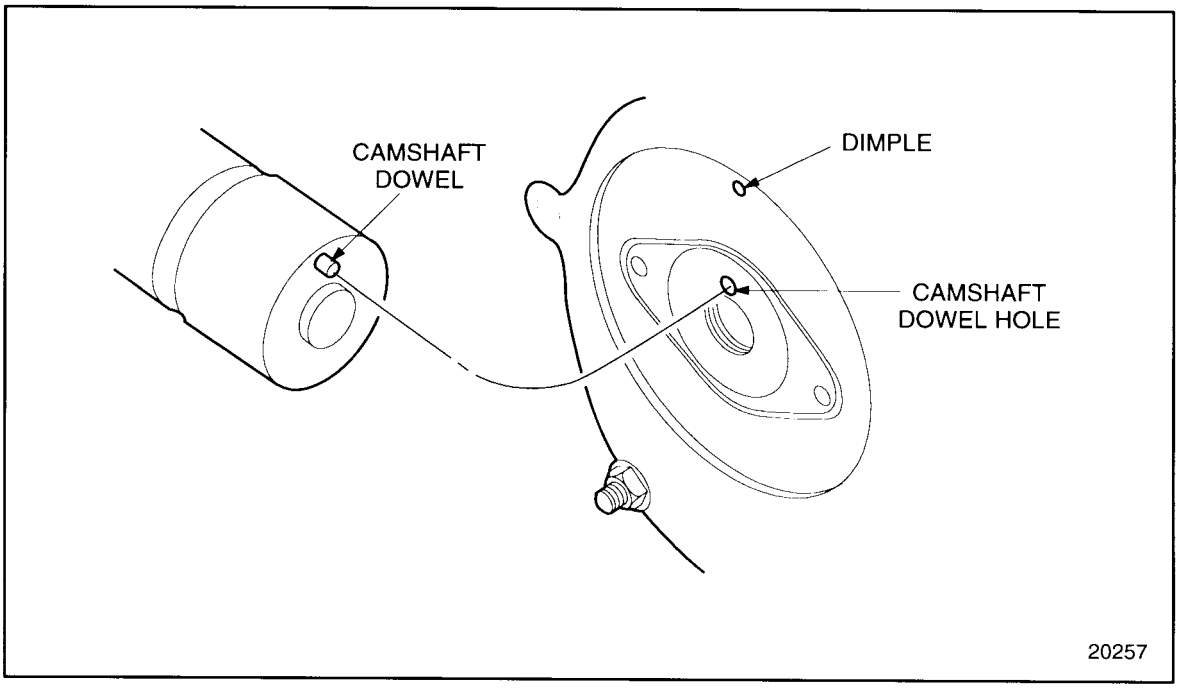

Figure 1-390 Indexing Camshaft Dowel

4. Coat the lobes and journals of the camshaft with clean engine lubricating oil. Index the dowel pin in the camshaft with the dowel hole in the camshaft hub.
5. Lower the camshaft into position and slide the camshaft forward, making certain that the camshaft dowel indexes with its mating hole in the camshaft thrust plate hub.
6. Install the upper bearing shells to the No. 1, 4 and 7 camshaft caps, noting the position of the oil holes and locating tangs.

NOTICE:
Do not apply oil to the number 1 or number 7 camshaft bearing shells. These shells *must* be clean and dry for proper sealant application. Applying oil to the number 1 or number 7 shells may result in oil leakage from the camshaft bearing caps. **NOTE:** The camshaft will still have adequate clearance from the number 1 and number 7 shells due to the oil film thickness on bearings 2 through 6.

7. Coat the number 2 through number 6 bearing shells with clean engine lubricating oil.
8. For engines built after May 1999, a race track seal is used on the Number 1 bearing cap. For bearing cap Number 7, use one rubber O-ring in the counterbore in the cylinder

 Copyright © 2004 DETROIT DIESEL CORPORATION

head. Before assembling the camshaft cap to the cylinder head, ensure the O-ring is in place on the cylinder head.

9. For engines built prior to May 1999, install the two rubber O-rings to the counterbores in the cylinder head at the Number 1 and 7 camshaft cap locations. Before assembling the camshaft caps to the cylinder head, ensure the two O-rings are in place on the cylinder head.

NOTICE:
For proper adhesion, assemble parts while RTV is wet. So not allow RTV to form a skin. Gasket Eliminator must be kept from the bearing shell sets and bearing surfaces. Gasket Eliminator cures with the absence of air. The length of time between installation of the Number 1 and 7 camshaft caps, and torquing the camshaft cap bolts and nuts should be kept to a minimum or improper lubrication will result causing engine damage.

10. Clean and dry the camshaft bearing cap joint face surfaces as well as the portions of the cylinder head face that mate with. These areas must be clean and dry for proper sealant adhesion. Use LPS®, Permatex®, or an equivalent non-filming degreaser.

(Rev. 2004) *All information subject to change without notice.*
6SE483 0401 Copyright © 2004 DETROIT DIESEL CORPORATION

11. Apply a continuous 1.6 mm (1/16 in.) bead of DDC gasket eliminator part number 23523064, or equivalent, to the joint face surfaces of the No. 1 and 7 camshaft caps. The bead must extend to the front edge of both caps. See Figure 1-391.

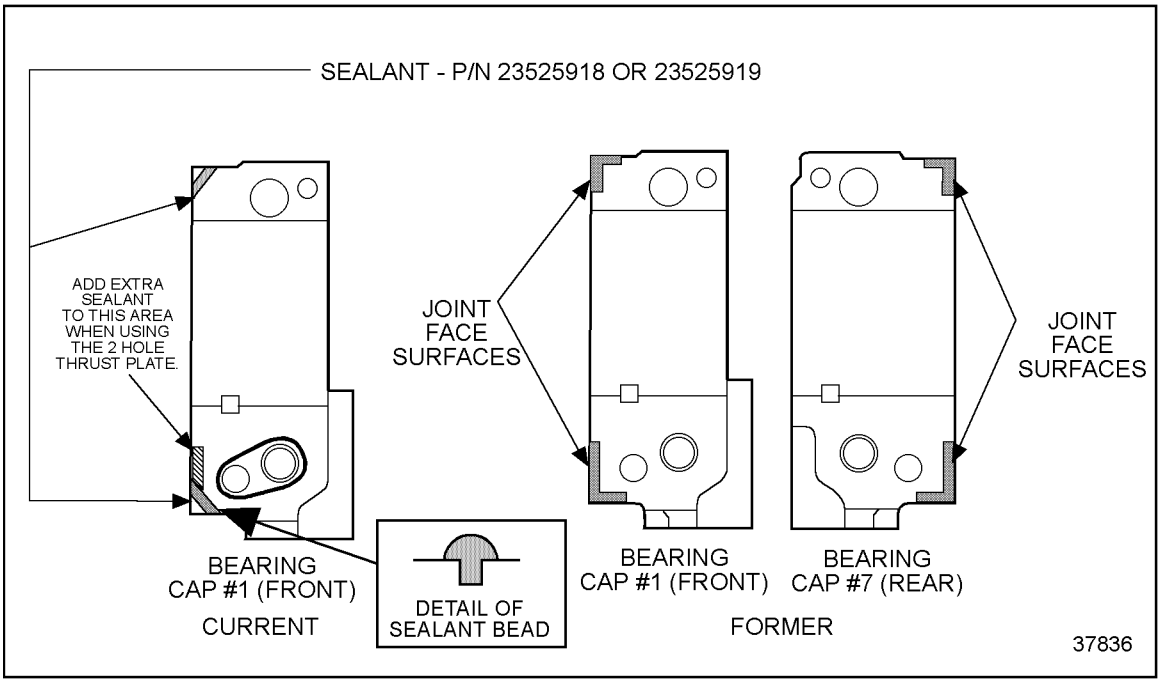

Figure 1-391 Gasket Eliminator Application

12. Install the No. 1, 4 and 7 camshaft caps, with bearing shells in place, to their respective locations.
13. Install and tighten the two inboard studs and outboard bolts on bearing caps No. 1 and 7 using tool J 36003 part of J 36003–A, torque to 128–148 N·m (94–109 lb·ft).
14. Install the No. 4 bearing cap outboard bolt and torque it to 126-146 N·m (93-108 lb·ft).
15. Remove the three bolts holding the camshaft gear pilot, J 35906 to the gear case. Remove the camshaft gear pilot.
16. Working through the camshaft drive gear access hole in the front of the gear case, tap the center of the camshaft drive gear with a fiber mallet or plastic hammer to move the camshaft thrust plate, hub and camshaft drive gear rearward in the gear case until the camshaft thrust plate bolts can be started in the cylinder head and No. 1 camshaft cap.

 Copyright © 2004 DETROIT DIESEL CORPORATION

NOTICE:

Use care to ensure that the camshaft dowel is not disengaged during this step or damage to engine may result.

NOTICE:

Use care to prevent dropping thrust plate mounting bolts into the gear case. If not removed, fasteners dropped into the gear case may cause severe engine damage during start-up.

17. Install the thrust plate mounting bolts through the thrust plate and into the cylinder head and No. 1 camshaft cap. Using a 13 mm socket and ratchet, tighten the bolts alternately and progressively to draw the thrust plate straight into the gear case. Torque the bolts to 30-38 N·m (22-28 lb·ft).
18. Coat the threads and underside of the head of the camshaft drive gear-to-camshaft bolt with International Compound #2® (or equivalent). Install the bolt to the camshaft, finger-tighten.

NOTE:
The camshaft should be held in place while starting the camshaft drive gear-to-camshaft bolt, to prevent disengaging the camshaft dowel from the thrust plate hub and requiring disassembly and timing of camshaft.

NOTICE:

Only J 35652 should be used to hold the camshaft drive gear stationary while loosening or tightening the camshaft drive gear-to-camshaft bolt to prevent component damage.

19. Insert J 35652through a lightening hole of the camshaft drive gear.
20. Bar the engine over slightly to position the camshaft drive gear holding tool so that the bolt holes in the holding tool align with the access cover bolt holes in the gear case cover using the 3/4 in. square hole in the center of the crankshaft pulley to bar the engine over.
21. Install the two of the access cover bolts to secure the tool to the gear case.
22. Torque bolt to 75 N·m (55 lb·ft).

(Rev. 2004) *All information subject to change without notice.*
6SE483 0401 Copyright © 2004 DETROIT DIESEL CORPORATION

23. Turn bolt an additional 120 degrees. See Figure 1-392.

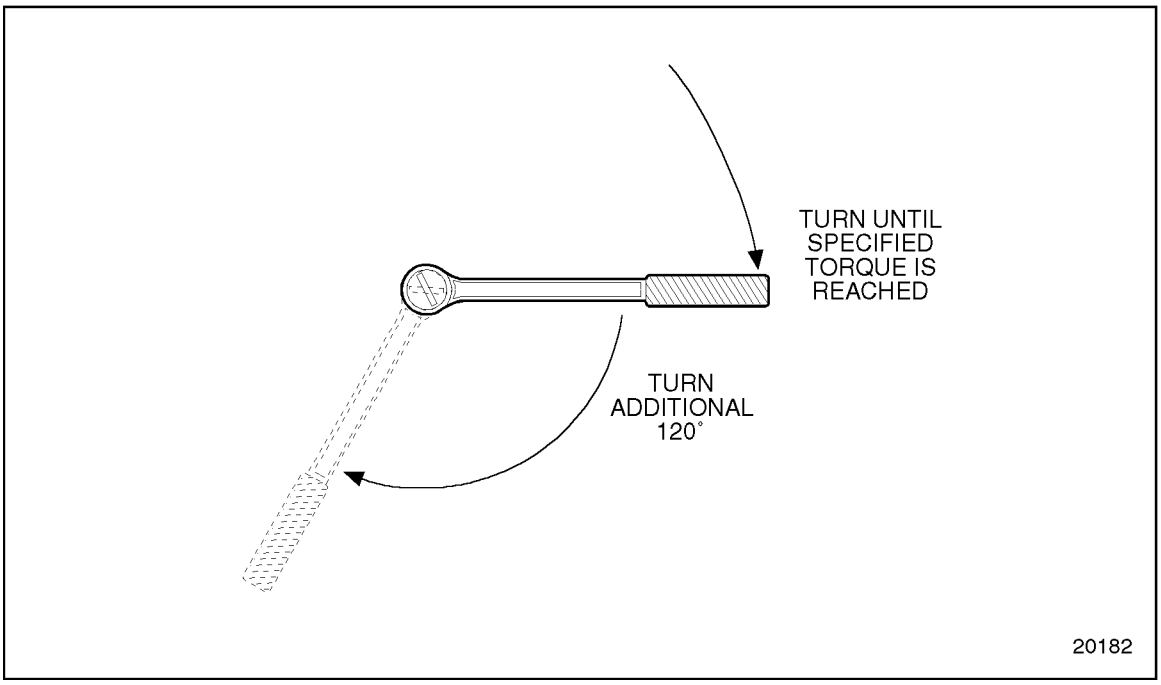

Figure 1-392 Torque Turn Limits

24. Remove the camshaft drive gear torque holding tool, J 35652-A.
25. Adjust the camshaft drive gear-to-adjustable idler gear lash. Refer to section 1.22.2.1.

NOTE:
Correct camshaft drive gear lash adjustment depends on the bolt and stud for No. 1 and 7 camshaft caps, the outboard bolt on No. 4 camshaft cap, and the camshaft drive gear-to-camshaft retaining bolt being tightened to the specified torque. However, the valve and injector spring pressures will not allow correct camshaft rotation. Therefore, do NOT install the rocker arm shaft assemblies before the camshaft gear lash has been measured and adjusted.

For Series 60 2002 Engines equipped with the new Compact Gear Train Assembly. Install the camshaft gear on the camshaft as follows:

1. Using a suitable press, support the camshaft securely on the press. The bottom of camshaft must be firmly secured to prevent any movement.
2. Install the camshaft gear into the camshaft gear cover and lower it as a assembly onto the nose of the camshaft.
3. Align the key in the camshaft with the key way in the camshaft gear.
4. Gently press the gear all the way onto the camshaft until it bottoms and is fully seated on the camshaft.

 Copyright © 2004 DETROIT DIESEL CORPORATION

For Series 60 Engines equipped with the new Compact Gear Train Assembly install camshaft assembly as follows:

1. Install camshaft alignment tool J 45946 in camshaft gear cover and camshaft gear, making sure the pin on the tool is entered into the timing hole in the backside of the camshaft gear cover. See Figure 1-393.

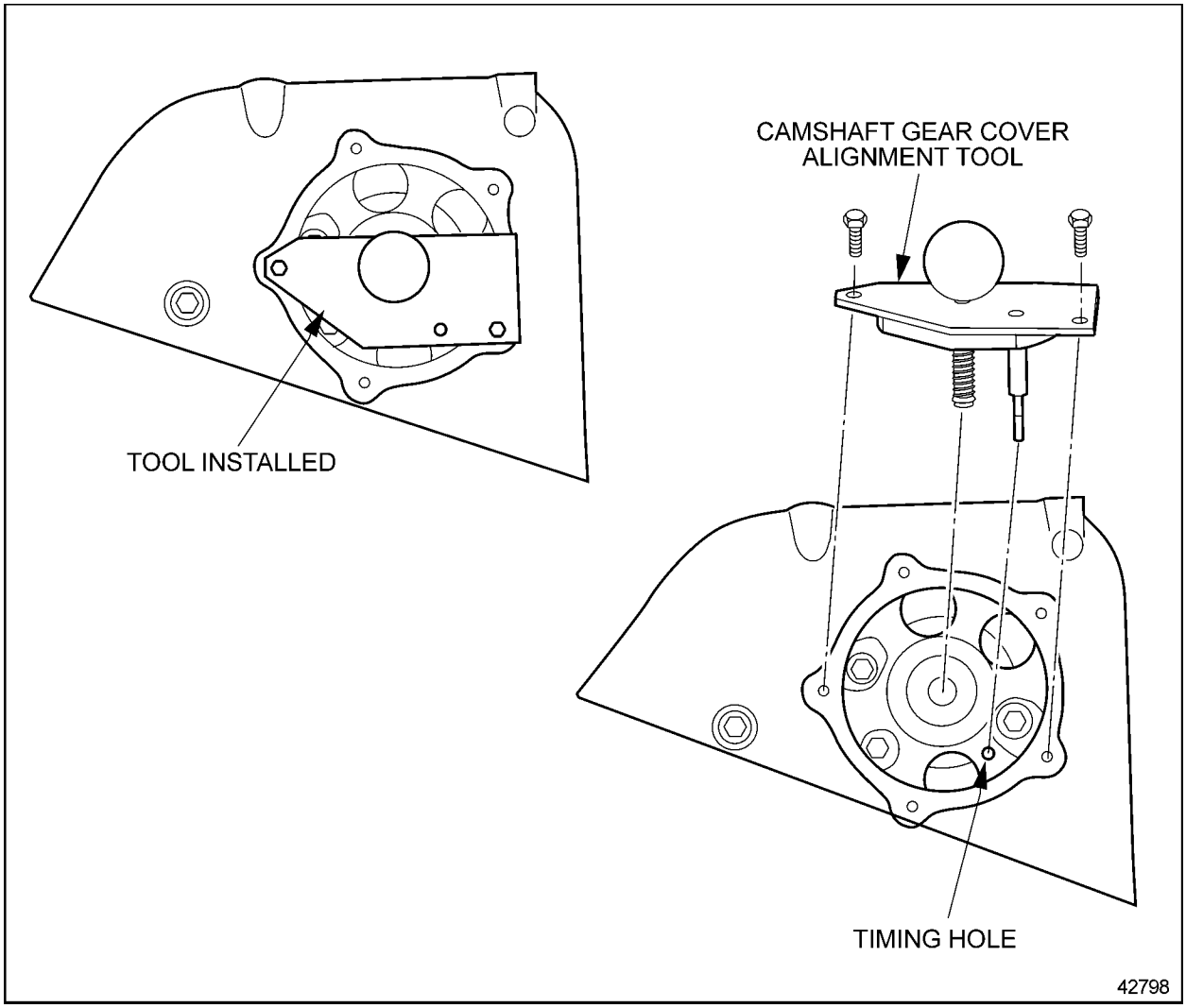

Figure 1-393 Camshaft Alignment Tool

(Rev. 2004) *All information subject to change without notice.*
6SE483 0401 Copyright © 2004 DETROIT DIESEL CORPORATION

NOTICE:
Do not bar the engine over with the timing pin installed. The timing pin is designed to break and will not damage the crankshaft.

2. Verify timing pin is in crankshaft locator hole. See Figure 1-394.

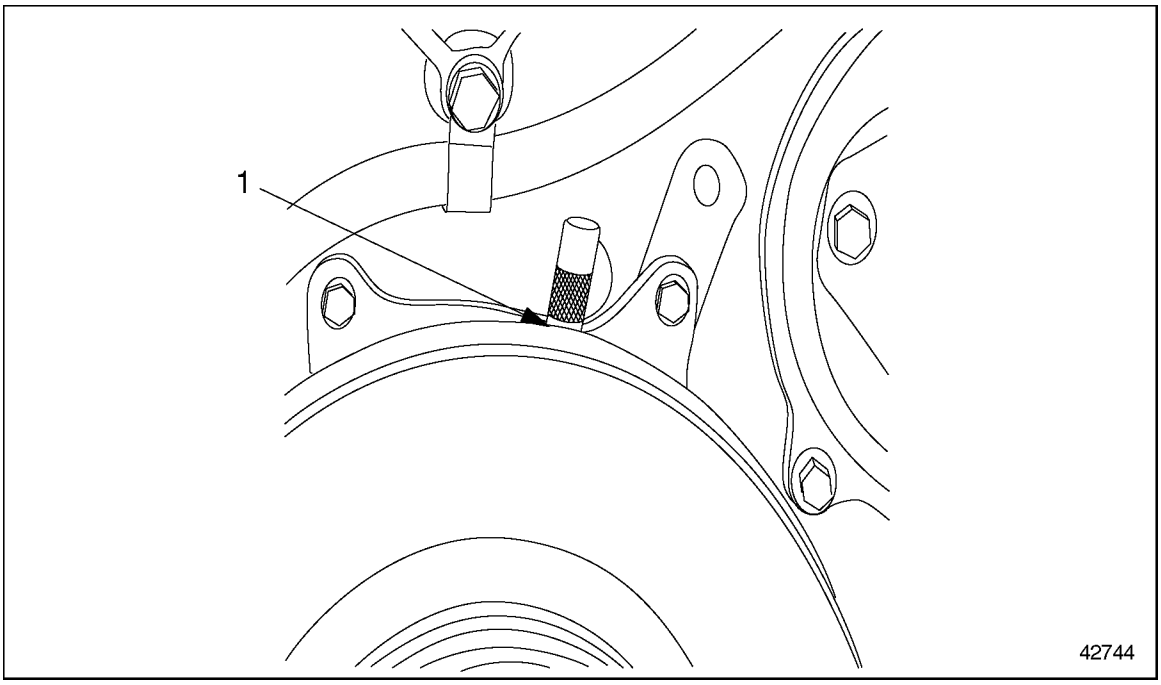

1. Timing Pin

Figure 1-394 Crankshaft Timing Pin

3. If the adjustable idler gear was removed or replaced remove the cover plate and loosen the three hub retaining nuts so the gear hub can be easily moved. Install tool J 46306 to hold idler gear hub at the middle of travel, this procedure will assist in correctly installing the camshaft gear.

 Copyright © 2004 DETROIT DIESEL CORPORATION

4. Ensure two seals are properly installed in camshaft gear cover. See Figure 1-395.

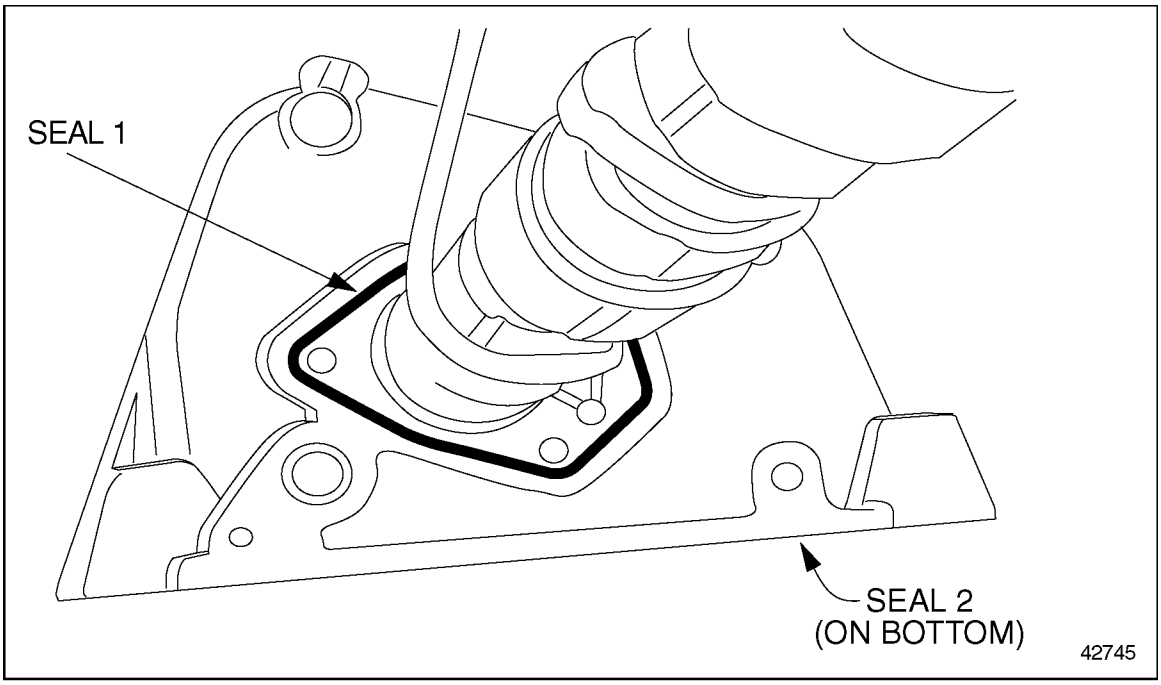

Figure 1-395 Camshaft Cover Seals

(Rev. 2004) *All information subject to change without notice.*
6SE483 0401 Copyright © 2004 DETROIT DIESEL CORPORATION

5. Apply RTV along split line on gear case. See Figure 1-396.

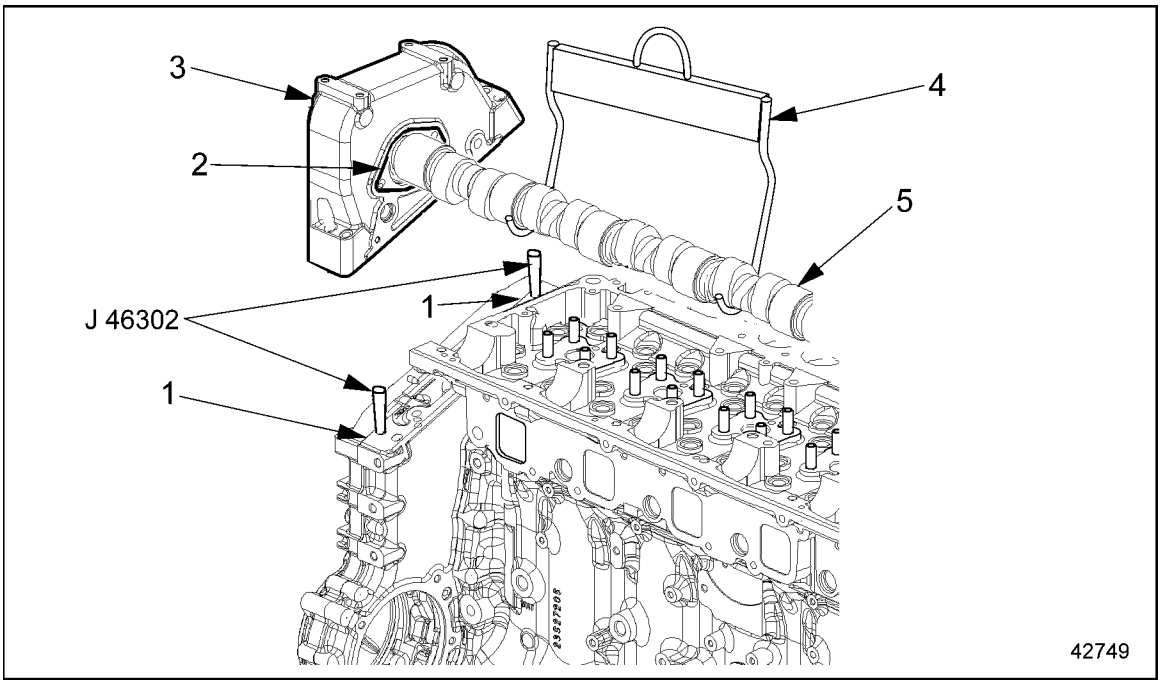

1. RTV Sealant
2. Seal
3. Camshaft Gear Cover
4. Lifting Tool J 46305
5. Camshaft

Figure 1-396 Application of RTV Sealant along Split Line

NOTE:
Camshaft gear cover assembly must be installed promptly to avoid the setting of the RTV.

⚠ CAUTION:

To avoid injury when removing or installing a heavy engine component, ensure the component is properly supported and securely attached to an adequate lifting device to prevent the component from falling.

6. Install two guide studs J 46302 into gearcase to guide camshaft gear cover assembly onto gear case. Using lifting tool J 46305 place front lifting hook between the number 2 injector lobe and intake valve and the rear hook between number 4 injector lobe and intake valve, lower camshaft assembly into position on bearings and gear case. See Figure 1-396.

NOTE:
Insure that the seal on the rear of the camshaft gear cover does not catch on the edge of the cylinder head.

 Copyright © 2004 DETROIT DIESEL CORPORATION

7. After the assembly is in position remove the alignment tool and guide studs and install the camshaft gear cover bolts by hand. The timing hole in the back of the camshaft gear cover should be visible in the center of the hole in the gear. Install and tighten the four attachment bolts to the gear case until the camshaft gear cover just contacts the gear case do not torque. Reinstall the alignment tool to verify timing is correct. If timing is correct procede with installing the No. 1 camshaft cap. See Figure 1-397.

NOTE:
Verify alignment tool is installed correctly. Incorrect installation will result in gear not being in time and the procedure will need to be repeated.

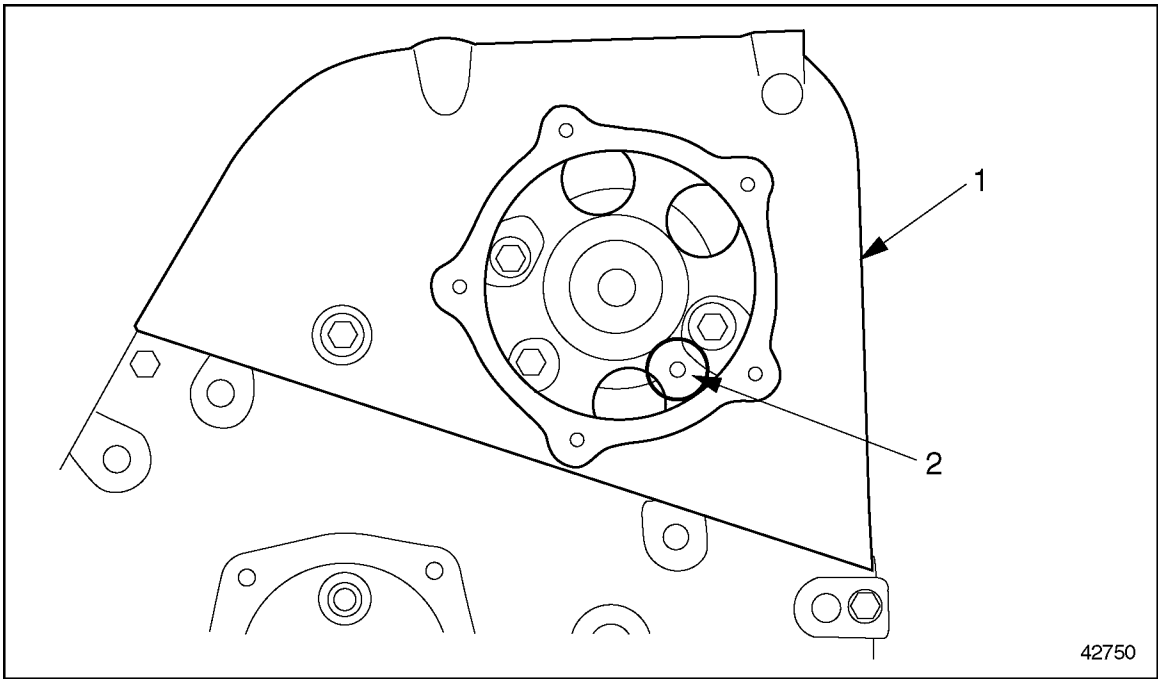

1. Camshaft Gear Cover
2. Timing Hole

Figure 1-397 Timing Verification

(Rev. 2004) *All information subject to change without notice.*
6SE483 0401 Copyright © 2004 DETROIT DIESEL CORPORATION

For Series 60 Engines equipped with new Compact Gear Train Assembly install camshaft bearing caps as follows:

8. Apply RTV to grooves in camshaft cap No. 1 and Gasket Eliminator® to camshaft cap No.7. See Figure 1-398.

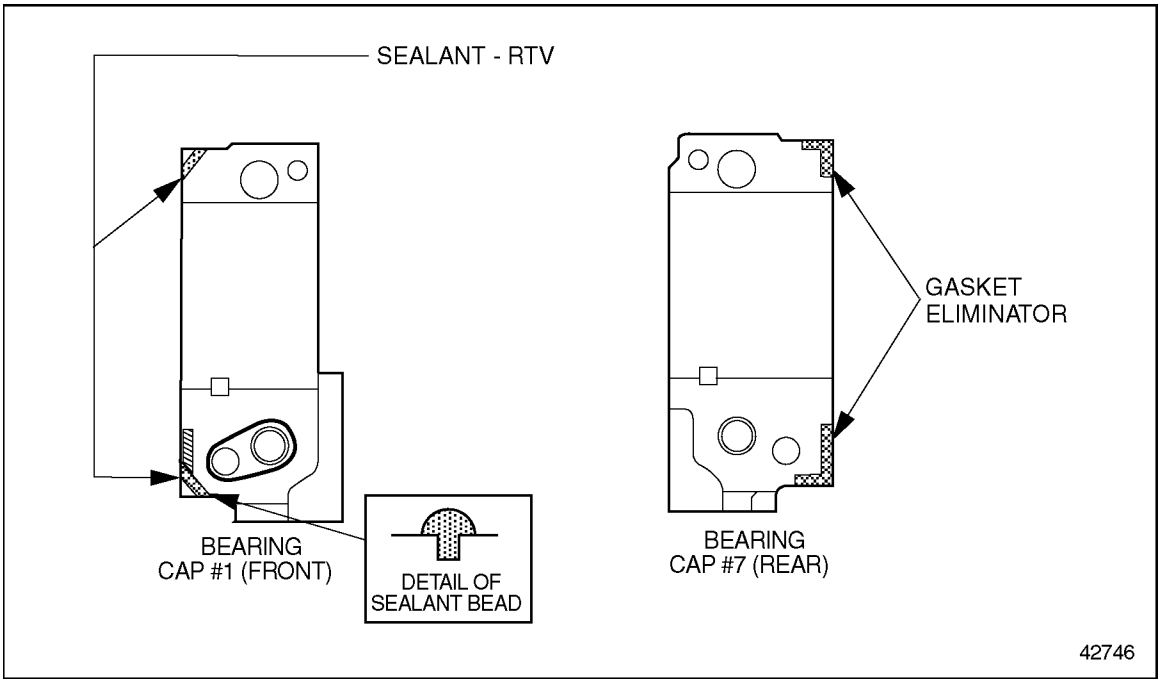

Figure 1-398 Sealant Application

 Copyright © 2004 DETROIT DIESEL CORPORATION

NOTICE:
If the camshaft gear cover bolts and/or the camshaft cap bolts are tightened down with the camshaft gear out of time damage to the camshaft gear cover and the timing pin will result.

9. Install No. 1 and 7 camshaft bearing caps with one bolt and one stud bolt in each and tighten. See Figure 1-399.

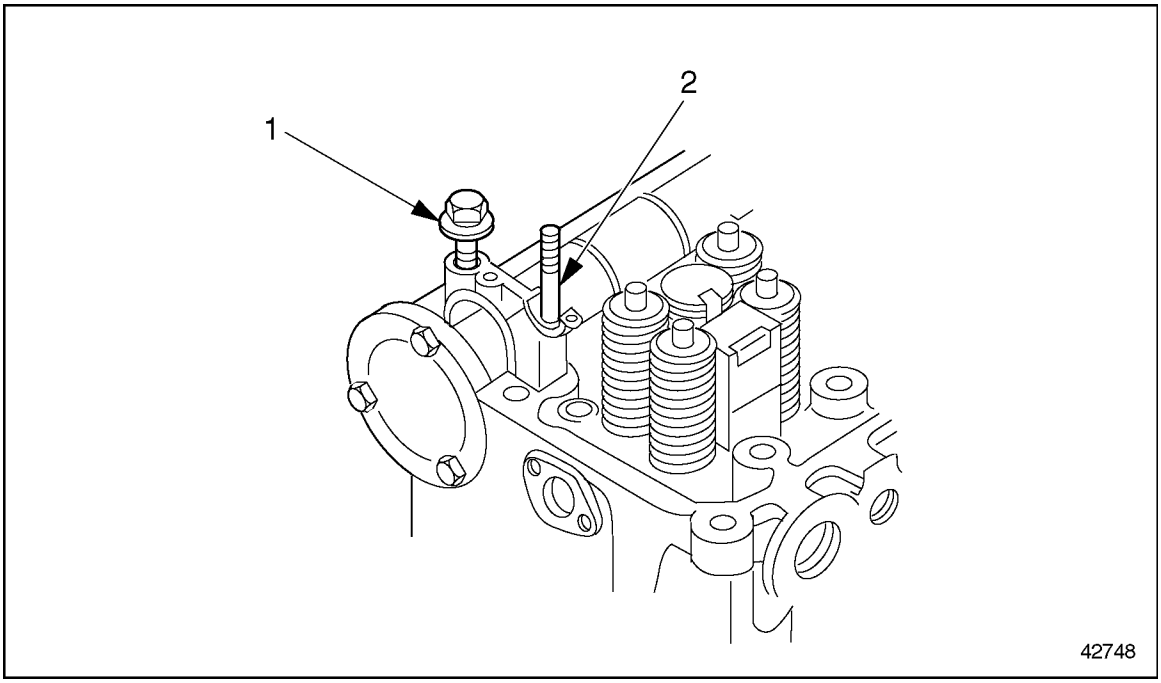

1. Bolt
2. Stud Bolt

Figure 1-399 Camshaft Bearing Cap Bolt and Stud Bolt

10. Install the remaining five camshaft caps onto cylinder head with one bolt for each camshaft cap.
11. Torque all camshaft cap bolts and stud bolts to 126-146 N·m (93-108 lb·ft).

(Rev. 2004) *All information subject to change without notice.*
6SE483 0401 Copyright © 2004 DETROIT DIESEL CORPORATION

12. Install three bolts inside camshaft gear cover and torque to 10 N·m (7 lb·ft). See Figure 1-400.

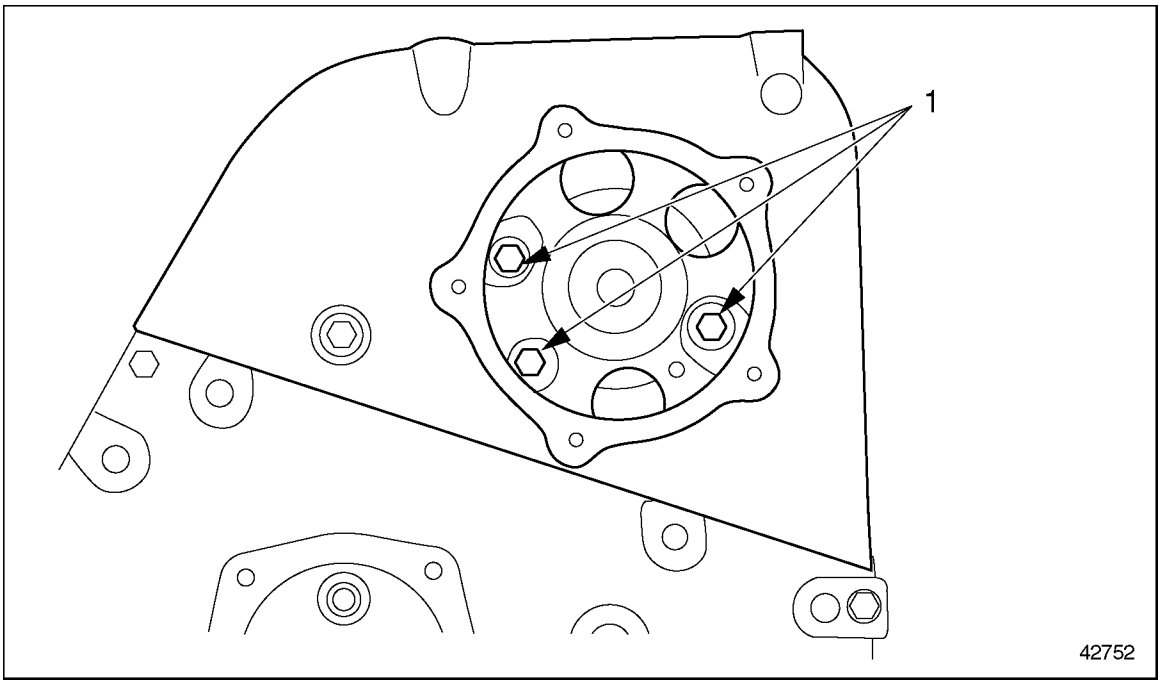

1. Bolt

Figure 1-400 Camshaft Gear Cover Bolts

 Copyright © 2004 DETROIT DIESEL CORPORATION

13. Install four camshaft gear cover bolts torque to 56-66 N·m (44-48 lb·ft) using torque sequence as shown in Figure 1-401.

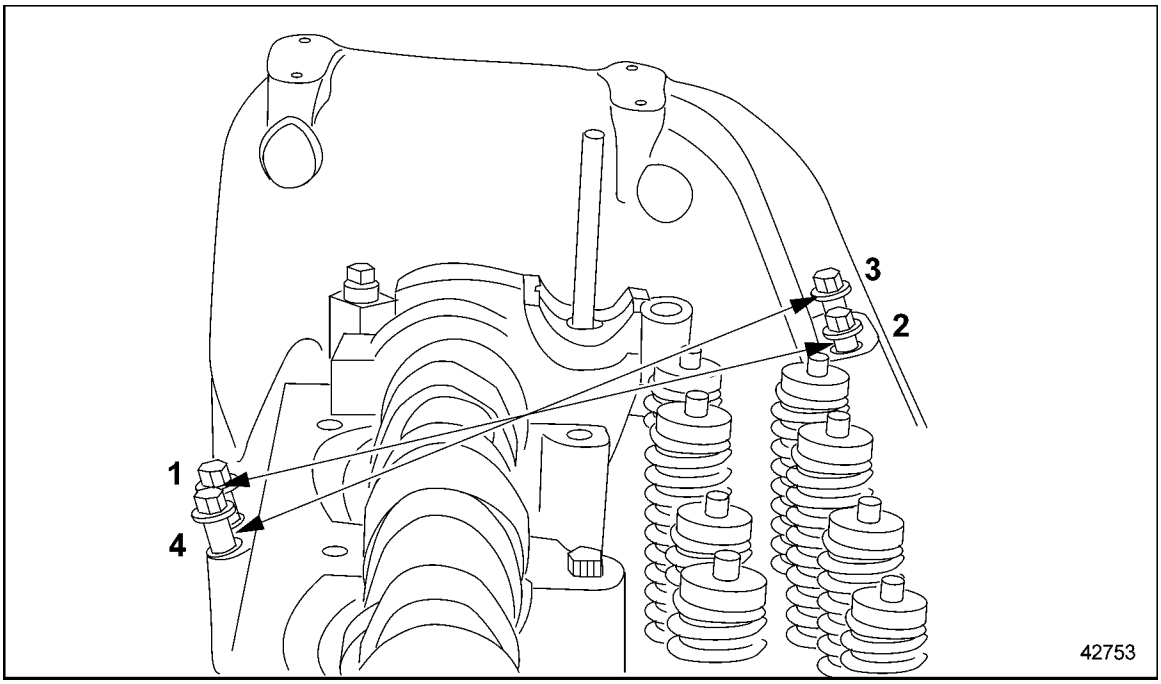

Figure 1-401 Bolt Torque Sequence

14. Torque the three bolts previously installed inside camshaft gear cover to 56-66 N·m (44-48 lb·ft). See Figure 1-400.

(Rev. 2004) *All information subject to change without notice.*
6SE483 0401 Copyright © 2004 DETROIT DIESEL CORPORATION

15. Install remaining bolt to camshaft gear cover torque to 136 N·m (100 lb·ft). See Figure 1-402.

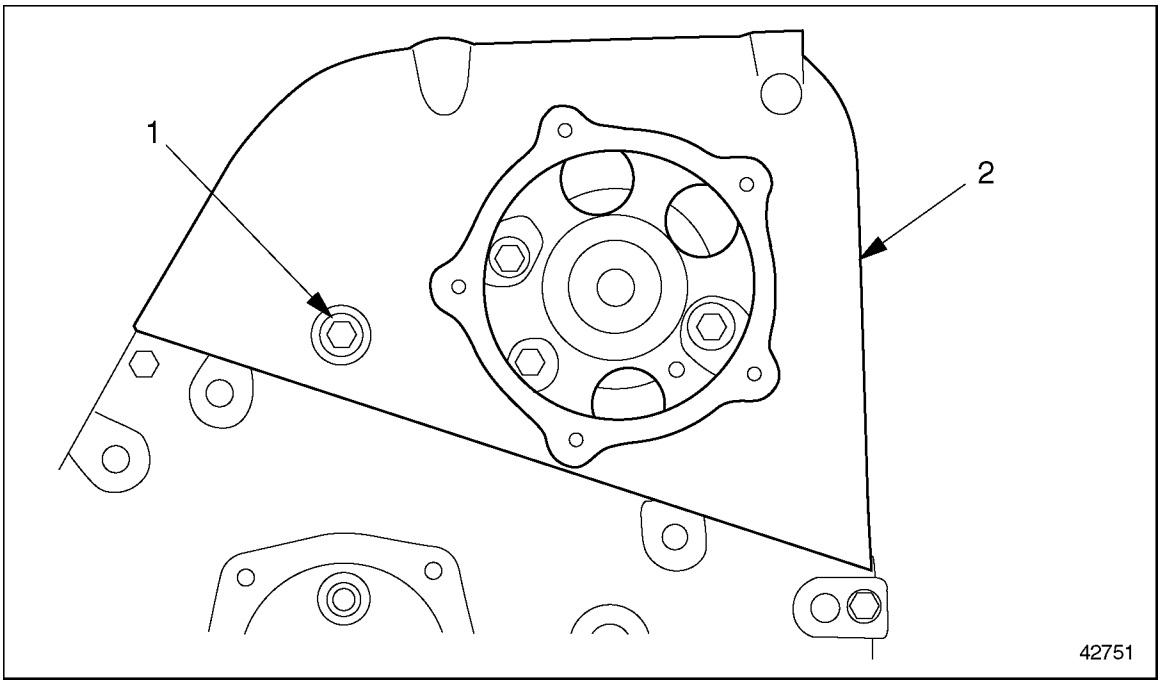

1. Bolt
2. Camshaft Gear Cover

Figure 1-402 Camshaft Bolt

16. Ensure timing of the gear has been verified. Refer to Step 6.
17. Remove timing pin from crankshaft and alignment tool from gearcase cover.
18. Check camshaft gear lash and adjust if necessary. Refer to Section 1.21.

1.24.5.1 Test of Camshaft End Play

Measure the camshaft end play, using a dial indicator and magnetic base, as follows:

 Copyright © 2004 DETROIT DIESEL CORPORATION

1. Install the dial indicator so that the pointer is in contact with either the camshaft drive gear-to-camshaft retaining bolt, or at the rear end of the engine, in contact with the end of the camshaft. See Figure 1-403.

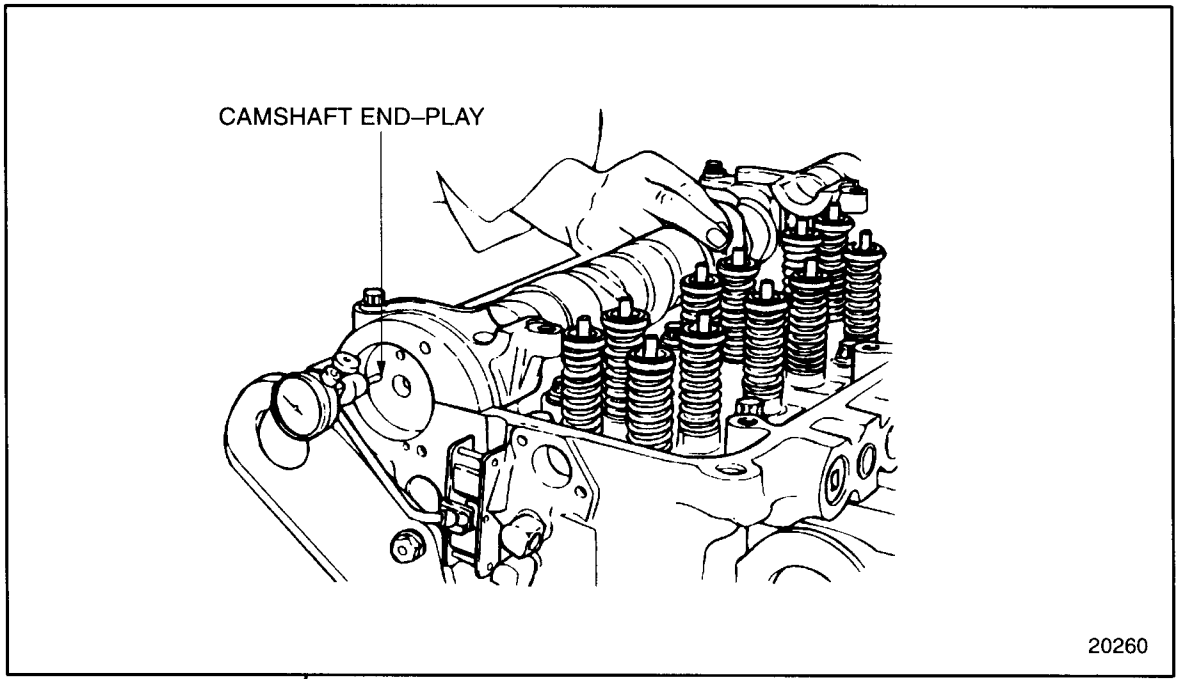

Figure 1-403 Camshaft End Play

2. Grasp the camshaft between the No. 1 and 4 camshaft caps, and move the cam as far forward as possible. Zero the dial indicator.
3. Move the camshaft as far as possible, to the rear. Read and record the total amount of end play as indicated.
4. Allowable camshaft end thrust specifications are 0.076 - 0.381 mm (0.003 -0.015 in.) and are listed in Table 1-27.
5. If the end play is beyond the maximum limit, loosen and re-torque the camshaft drive gear-to-camshaft retaining bolt, and the camshaft thrust plate retaining bolts, to ensure that the camshaft thrust plate is seated properly in the gear case.
6. If the end play is still beyond the maximum limit, remove and replace the camshaft thrust plate. Refer to section 1.24.2for removal and refer to section 1.24.3 for installation.

(Rev. 2004) *All information subject to change without notice.*
6SE483 0401 Copyright © 2004 DETROIT DIESEL CORPORATION

1.24.6 Installation of Camshaft and Camshaft Bearing

Continue installing camshaft and camshaft bearings as follows:

1. Install the bearing shells to the remaining No. 2, 3, 5, and 6 camshaft caps, noting the oil holes and locating tangs.
2. Coat the bearing shells with clean engine lubricating oil.
3. Install the remaining camshaft caps to their saddles on the cylinder head. Install the four outboard camshaft cap bolts for caps No. 2, 3, 5, and No. 6 finger-tight.
4. Coat the rocker arm assemblies and camshaft liberally with clean engine lubricating oil.
5. Install the rocker arm shaft assemblies to the cylinder head. Refer to section 1.3.3.
6. Install the remaining inboard camshaft cap bolts and spacers through the rocker arm shafts and into No. 2, 3, 4, 5, and 6 camshaft caps. Install the two nuts and spacers to the studs at No. 1 and 7 camshaft caps.
7. Torque the 11 bolts and two nuts to 101-116 N·m (75-85 lb·ft) using the sequence. See Figure 1-404.

NOTE:
It is not necessary to tighten bolts 9, 13, and 14 if a Jake Brake® is to be installed.

NOTE:
Jake Brakes® are not on a natural gas engine.

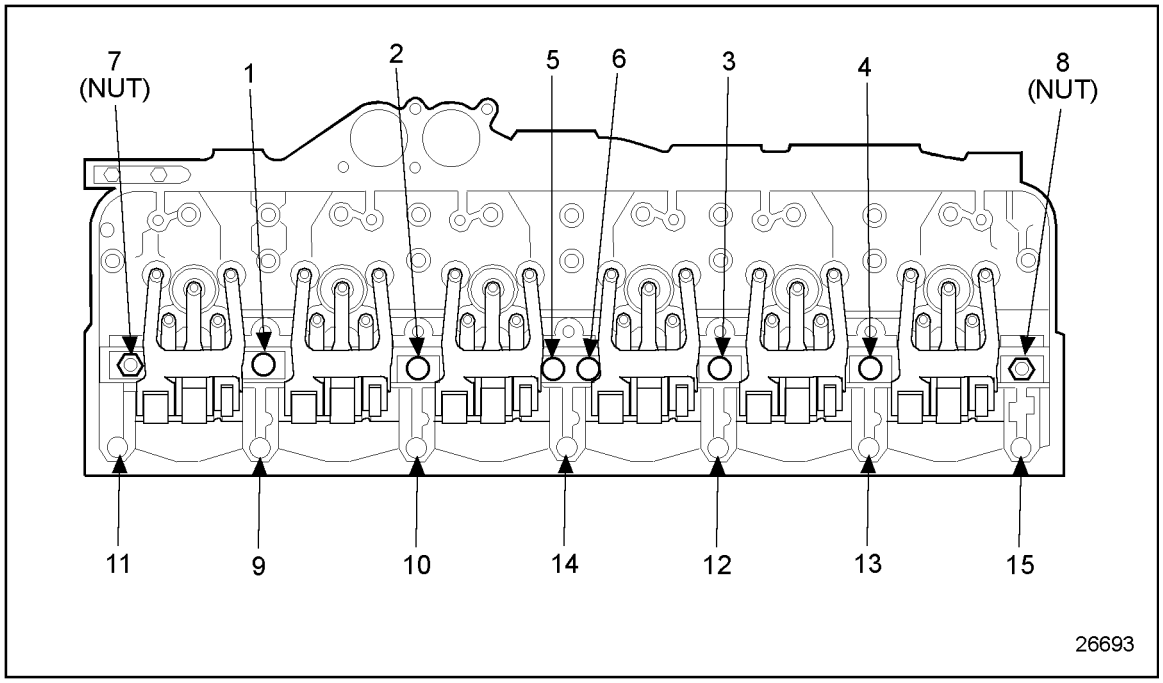

Figure 1-404 Camshaft Cap Bolts and Rocker Arm Shaft Nut Torque Sequence

 Copyright © 2004 DETROIT DIESEL CORPORATION

8. Clean all old gasket material from the mating surfaces of the rear camshaft cover and the cylinder head. Refer to section ADDITIONAL INFORMATION1.A.
9. Apply a thin 1.5 mm (1/16 in.) bead of Gasket Eliminator, PT-7276 (Loctite® 518) or equivalent to the mating surface of the cover.
10. Install the cover and torque the three bolts to 30-38 N·m (22-28 lb·ft).
11. Clean all old gasket material from the mating faces of the camshaft drive gear access cover and the gear case cover.
12. Insert a new gasket between the camshaft drive gear access cover and the gear case.
13. Torque the bolts to 30-38 N·m (22-28 lb·ft), using the tightening sequence. See Figure 1-405.

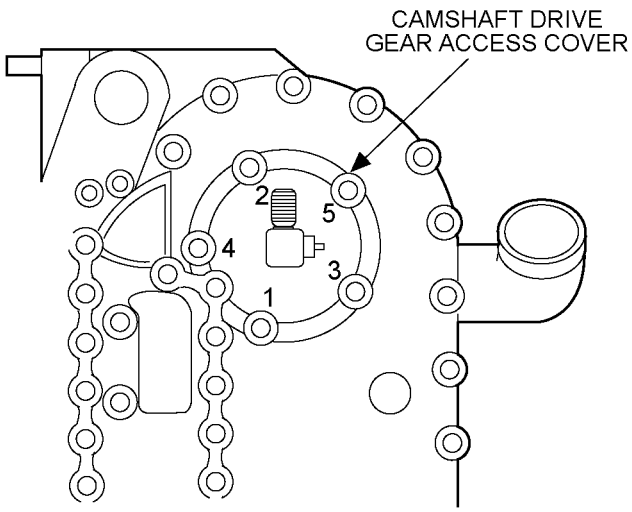

Figure 1-405 Camshaft Drive Gear Access Cover Torque Sequences

14. Adjust the intake and exhaust valve clearances and set the injector heights. Refer to section 12.2.
15. Install the fan hub, fan, (refer to section 4.7.6), and drive belts; refer to section 13.13.10.
16. Install any other components that were removed for this procedure.

(Rev. 2004) *All information subject to change without notice.*
6SE483 0401 Copyright © 2004 DETROIT DIESEL CORPORATION

1.24.6.1 Testing of Camshaft Timing for Diesel Engines

Check the camshaft timing as follows:

NOTICE:
The camshaft must be in time with the crankshaft. An engine which is "out of time" may result in pre-ignition, uneven running or a loss of power.

1. Remove the valve cover. Refer to section 1.6.2for one-piece rocker cover. Refer to section 1.6.3 for two-piece rocker cover. Refer to section 1.6.5for three-piece rocker cover.
2. Select any cylinder for the timing check.
3. Remove the rocker arm assembly for the cylinder selected. Refer to section 1.3.2.
4. Remove the injector for that cylinder. Refer to section 2.3.2.
5. Carefully slide a rod, approximately 304.8 mm (12 in.) long, through the injector tube hole until the end of the rod rests on top of the piston.
6. Using the 3/4 in. square drive hole in the center of the crankshaft pulley and a 3/4 in. drive breaker bar, turn the crankshaft slowly in the direction of engine rotation. See Figure 1-406. Stop when the rod reaches the end of its upward travel.

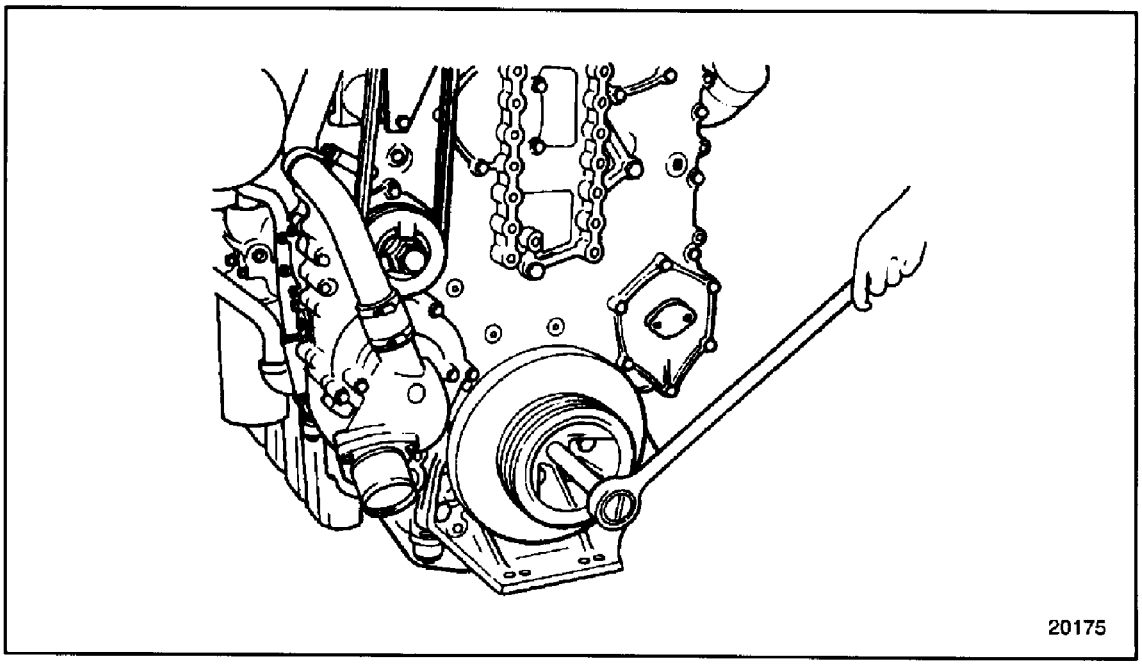

Figure 1-406 Barring Engine Over

NOTE:
The cylinder selected must be on the compression stroke when performing this check.

 Copyright © 2004 DETROIT DIESEL CORPORATION

7. Remove the rod and turn the crankshaft, opposite the direction of rotation, between 1/16 and 1/8 of a turn.
8. Select a dial indicator with 0.0254 mm (0.001 in.) graduations and a spindle movement of at least 25.4 mm (1 in.). Provide an extension for the indicator spindle. The extension must be long enough to contact the piston just before it reaches the end of its upward stroke.
9. Install a magnetic dial indicator base in a suitable place on the cylinder head and position the dial indicator over the injector hole tube.
10. Attach a suitable pointer to the gear case cover. The outer end of the pointer should extend over the vibration damper.
11. Turn the crankshaft slowly in the direction of engine rotation until the indicator hand just stops moving. Continue turning the crankshaft until the indicator hand starts to move again.
12. Reset the dial to zero.
13. Turn the crankshaft until the indicator reading is 0.254 mm (0.010 in.).
14. Scribe a line on the vibration damper in line with the end of the pointer.
15. Slowly turn the crankshaft opposite the direction of engine rotation until the indicator hand just stops moving. Continue turning the crankshaft until the indicator hand starts to move again.
16. Reset the dial to zero. Then turn the crankshaft in the same direction until the indicator reading is 0.254 mm (0.010 in.).
17. Scribe a second line on the vibration damper in line with the end of the pointer.
18. Scribe a third line half way between the first two lines. This is top dead center for the cylinder selected when the pointer is lined up with it.
19. Remove the dial indicator and base from the engine.
20. Install the injector that was removed. Refer to section 2.3.5.
21. Install the rocker arm assemblies. Refer to section 1.3.3.
22. Turn the crankshaft opposite the direction of engine rotation while watching the injector rocker arm cam follower for the cylinder selected. Turn the crankshaft until the cam follower is on the base circle of the injector lobe of the cam.
23. Install a magnetic dial indicator base on the cylinder head. Install a dial indicator so that the spindle rests directly on the injector cam follower roller for the cylinder selected.

NOTE:
The spindle should be on the center line of the injector cam follower roller pin in order to get an accurate measurement of cam lift.

24. Turn the crankshaft slowly, in the direction of engine rotation, until the center mark on the vibration damper lines up with the pointer.

(Rev. 2004) *All information subject to change without notice.*
6SE483 0401 Copyright © 2004 DETROIT DIESEL CORPORATION

25. Check the dial indicator reading and compare the reading with the values listed in Table 1-10 to determine the correct indicator reading.

Engine	DDEC Version	Model	Camshaft Part No.	Model Year	Low Injector Cam Roller Lift at TDC	High Injector Cam Roller Lift at TDC
12.7 L	III	GK	23521680	1998	5.36 mm (0.211 in.)	6.76 mm (0.266 in.)
12.7 L	IV	PK, TK	23521680	1998	5.36 mm (0.211 in.)	6.76 mm (0.266 in.)
11.1 L	IV	EK	23522199	1998	5.46 mm (0.215 in.)	6.71 mm (0.264 in.)
11.1 L	III	SK	23518717	1993-1997	4.95 mm (0.195 in.)	6.53 mm (0.257 in.)
12.7 L	III	GK	23513565	1993-1997	4.95 mm (0.195 in.)	6.53 mm (0.257 in.)
11.1 L	III	WK	23513563	1993-1997	4.95 mm (0.195 in.)	6.53 mm (0.257 in.)
11.1 L	II	WU	8929484	1986-1993	4.39 mm (0.173 in.)	5.46 mm (0.215 in.)
12.7 L	II	GU	23505194	1986-1993	4.39 mm (0.173 in.)	5.46 mm (0.215 in.)
11.1 L	IV	LK	23524655	1999	5.21 mm (0.205 in.)	6.27 mm (0.247 in.)
11.1 L	IV	LK	23524914	1999	5.21 mm (0.205 in.)	6.27 mm (0.247 in.)
12.7 L	IV	BK, MK	23524292	1999	5.03 mm (0.198 in.)	6.10 mm (0.240 in.)
12.7 L	IV	MK, BK	23524912	1999-2000	5.03 mm (0.198 in.)	6.10 mm (0.240 in.)
12.7 L	IV	MK, BK	23528309	2000-2001	6.527 mm (0.257 in.)	7.594 mm (0.299 in.)
12.7 L	IV	MK	23528606	2001	5.893 mm (0.232 in.)	6.960 mm (0274 in.)
14.0 L	IV	HK	23524912	1999-2000	5.03 mm (0.198 in.)	6.10 mm (0.240 in.)
14.0 L	IV	HK	23528309	2000-2001	6.527 mm (0.257 in.)	7.594 mm (0.299 in.)

Table 1-10 Camshaft Timing Setting Dimensions

26. If the camshaft lift is incorrect, re-time the engine. Refer to section 1.22.2.1.
27. Refer to section 11.8 for verification of proper camshaft and camshaft bearing installation.

1.24.6.2 Testing of Camshaft Timing for Natural Gas Engines

Check the camshaft timing as follows:

NOTICE:

The camshaft must be in time with the crankshaft. An engine which is "out of time" may result in pre-ignition, uneven running or a loss of power.

1. Remove the valve cover. Refer to section 1.6.2for one-piece rocker cover. Refer to section 1.6.3 for two-piece rocker cover. Refer to section 1.6.5for three-piece rocker cover.
2. Select any cylinder for the timing check.
3. Remove the rocker arm assembly for the cylinder selected. Refer to section 1.3.2.

 Copyright © 2004 DETROIT DIESEL CORPORATION

4. Remove the spark plug for that cylinder.
5. Carefully slide a rod, approximately 304.8 mm (12 in.) long, through the spark plug hole until the end of the rod rests on top of the piston.
6. Using the 3/4 in. square drive hole in the center of the crankshaft pulley and a 3/4 in. drive breaker bar, turn the crankshaft slowly in the direction of engine rotation. See Figure 1-407. Stop when the rod reaches the end of its upward travel.

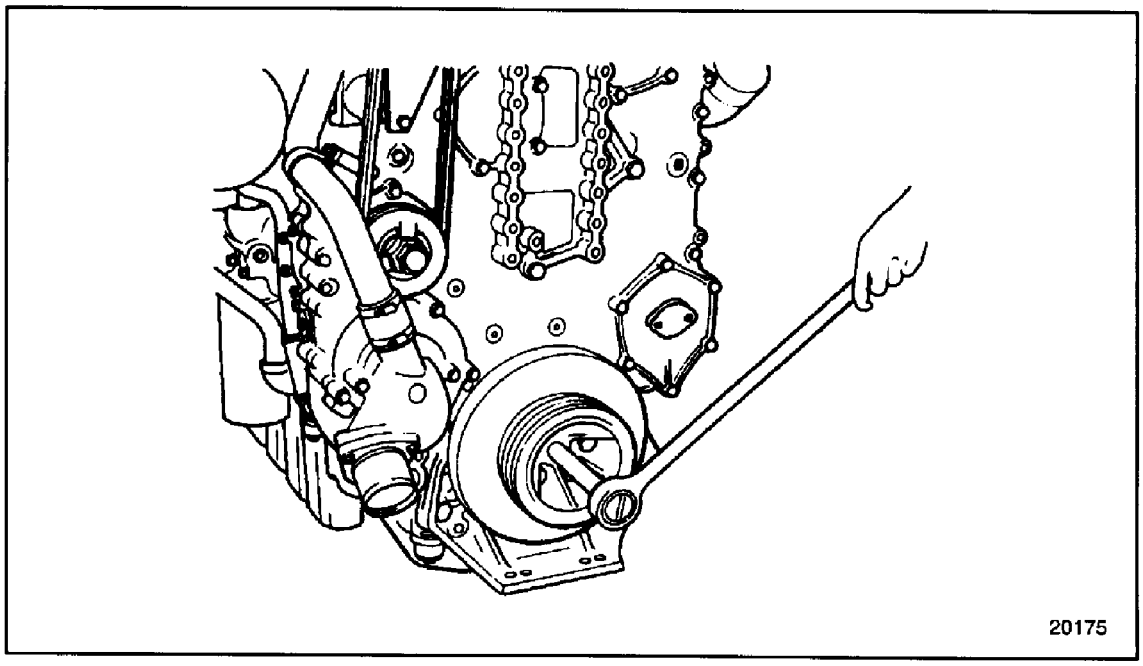

Figure 1-407 Barring Engine Over

NOTE:
The cylinder selected must be on the compression stroke when performing this check.

7. Remove the rod and turn the crankshaft, opposite the direction of rotation, between 1/16 and 1/8 of a turn.
8. Select a dial indicator with 0.0254 mm (0.001 in.) graduations and a spindle movement of at least 25.4 mm (1 in.). Provide an extension for the indicator spindle. The extension must be long enough to contact the piston just before it reaches the end of its upward stroke.
9. Install a magnetic dial indicator base in a suitable place on the cylinder head and position the dial indicator over the spark plug hole.
10. Attach a suitable pointer to the gear case cover. The outer end of the pointer should extend over the vibration damper.
11. Turn the crankshaft slowly in the direction of engine rotation until the indicator hand just stops moving. Continue turning the crankshaft until the indicator hand starts to move again.
12. Reset the dial to zero.

(Rev. 2004) *All information subject to change without notice.*
6SE483 0401 Copyright © 2004 DETROIT DIESEL CORPORATION

13. Turn the crankshaft until the indicator reading is 0.254 mm (0.010 in.).
14. Scribe a line on the vibration damper in line with the end of the pointer.
15. Slowly turn the crankshaft opposite the direction of engine rotation until the indicator hand just stops moving. Continue turning the crankshaft until the indicator hand starts to move again.
16. Reset the dial to zero. Then turn the crankshaft in the same direction until the indicator reading is 0.254 mm (0.010 in.).
17. Scribe a second line on the vibration damper in line with the end of the pointer.
18. Scribe a third line half way between the first two lines. This is top dead center for the cylinder selected when the pointer is lined up with it.
19. Remove the dial indicator and base from the engine.
20. Install the spark plug that was removed.
21. Install the rocker arm assemblies. Refer to section 1.3.3.
22. Turn the crankshaft opposite the direction of engine rotation while watching the intake rocker arm cam follower for the cylinder selected. Turn the crankshaft until the cam follower is on the base circle of that intake lobe of the cam.
23. Install a magnetic dial indicator base on the cylinder head. Install a dial indicator so that the spindle rests directly on the intake cam follower roller for the cylinder selected.

NOTE:
The spindle should be on the center line of the intake cam follower roller pin in order to get an accurate measurement of cam lift.

24. Turn the crankshaft slowly, in the direction of engine rotation, until the center mark on the vibration damper lines up with the pointer.
25. Check the dial indicator reading:
    [a] The dial indicator reading for gas engines is 6.47 mm-7.54 mm (0.255 in. -0.297 in.).
26. If the camshaft lift is incorrect, re-time the engine. Refer to section 1.22.2.1.
27. Refer to section 11.8 for verification of proper camshaft and camshaft bearing installation.

 Copyright © 2004 DETROIT DIESEL CORPORATION

1.25 CAMSHAFT DRIVE GEAR

The camshaft drive gear, located at the front of the engine, under the gear case cover, is driven by the crankshaft through a series of intermediate gears. See Figure 1-408.

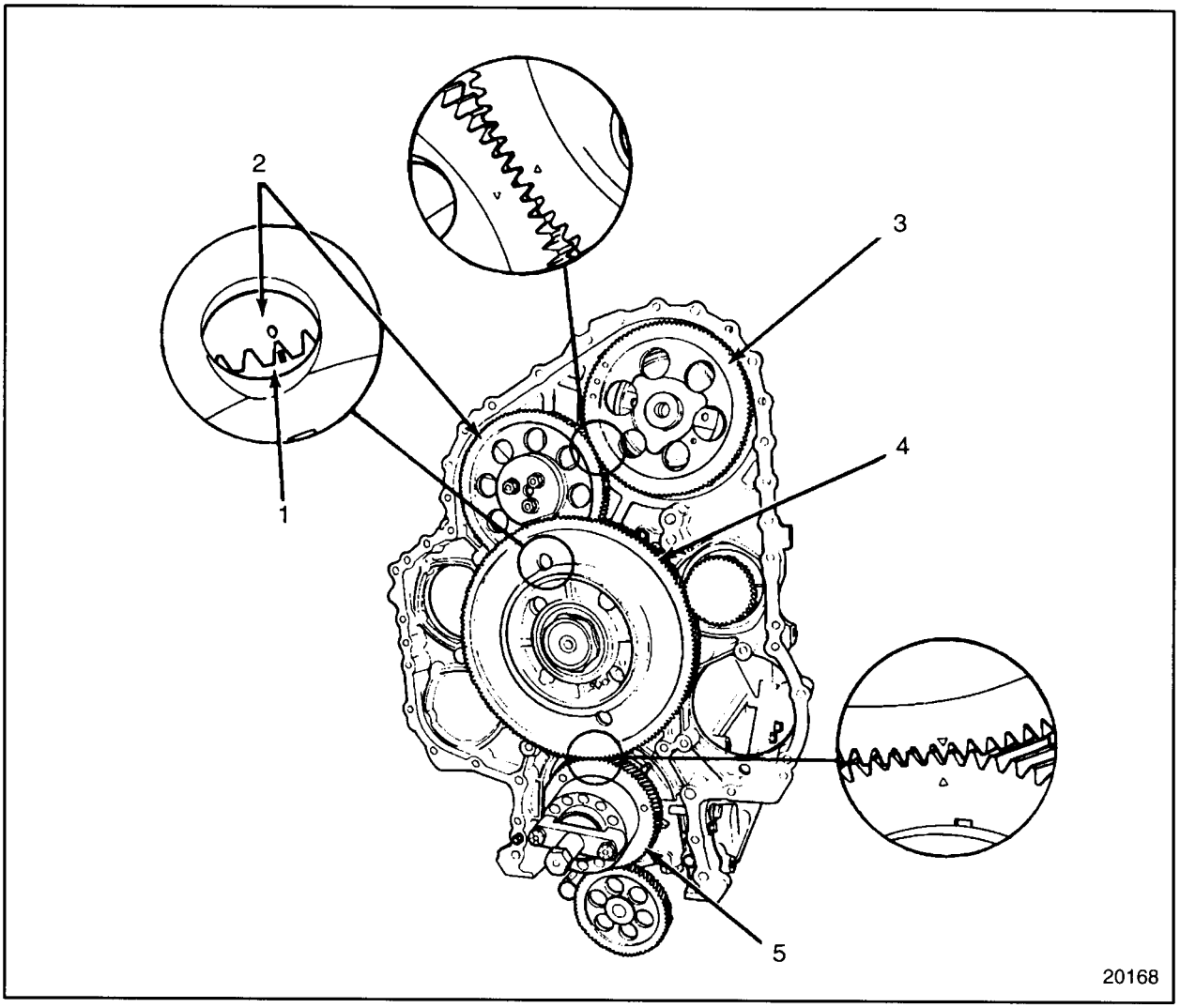

1. Idler Gear, Camshaft
2. Idler Gear, Adjustable
3. Drive Gear, Camshaft
4. Bull Gear
5. Timing Gear, Crankshaft

Figure 1-408 Engine Gear Train and Timing Marks

(Rev. 2004) *All information subject to change without notice.*
6SE483 0401 Copyright © 2004 DETROIT DIESEL CORPORATION

The gear train for the crankshaft drive consists of a crankshaft timing gear, mounted to the end of the crankshaft, meshing with a bull gear. To the rear of the bull gear is the camshaft idler gear, which is mounted on the same hub and rotates at the same speed as the bull gear. The camshaft idler gear meshes with an adjustable idler gear, which is mounted on a separate hub. The adjustable idler gear in turn meshes with the camshaft drive gear, which is mounted on the camshaft drive gear hub. The gears are designed so that the camshaft is driven at half crankshaft speed.

 Copyright © 2004 DETROIT DIESEL CORPORATION

Since the camshaft must be timed exactly to the crankshaft, a series of timing marks are stamped or etched on the gear faces of these gears so that they may be installed in correct relationship to each other.

The camshaft drive gear is keyed and pressed onto a hub located in the thrust plate assembly at the end of the camshaft. The camshaft drive gear and hub are retained to the end of the camshaft by the camshaft drive gear retaining bolt which goes through the camshaft drive gear and the hub, and is threaded into the end of the camshaft. See Figure 1-409.

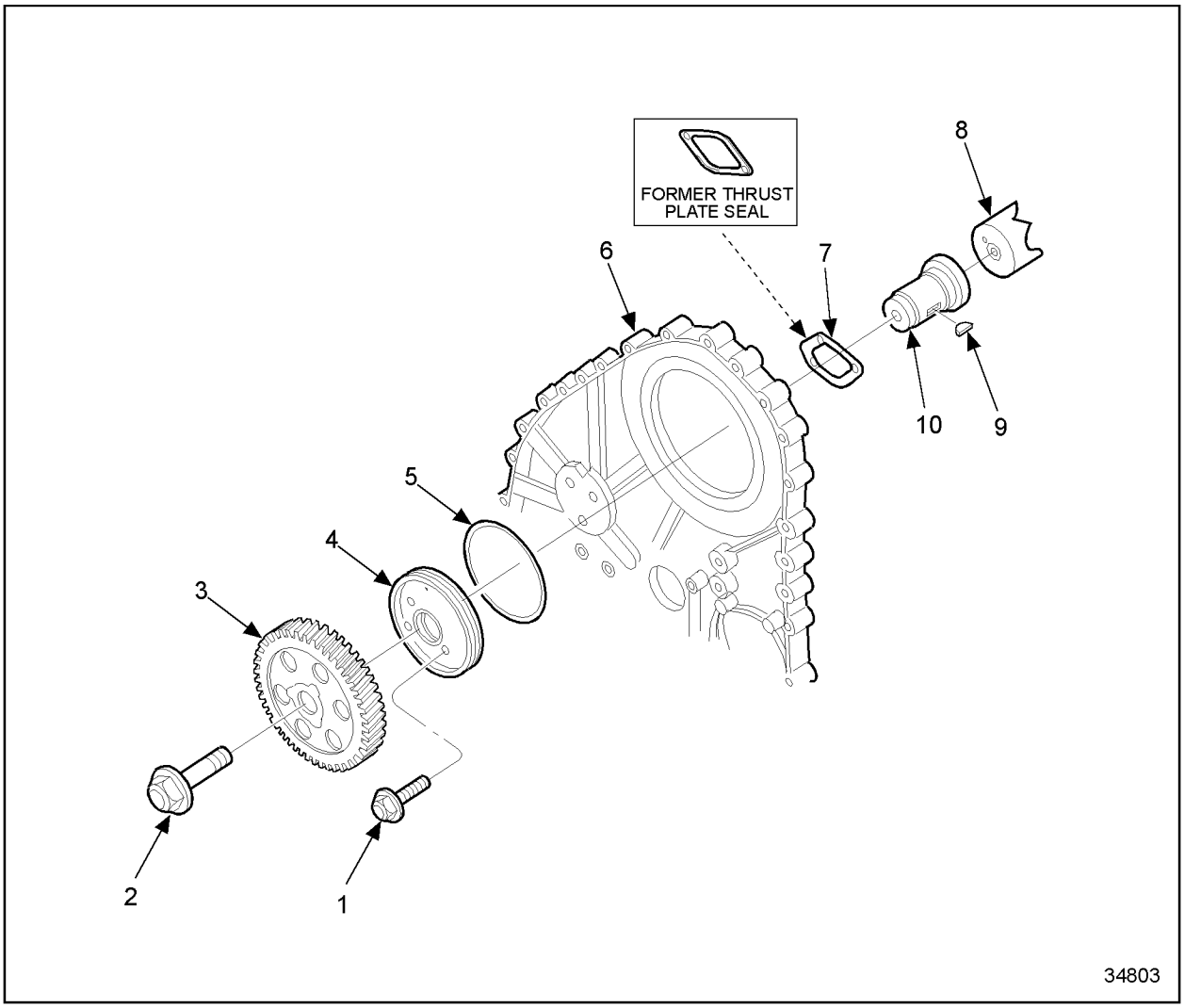

1. Bolt, Thrust Plate Retaining (2) or (3)
2. Bolt, Camshaft Hub Retaining
3. Drive Gear, Camshaft
4. Thrust Plate, Camshaft
5. O-ring
6. Gear Case
7. Seal, Thrust Plate
8. Camshaft
9. Key
10. Hub

Figure 1-409 Camshaft Drive Gear and Related Parts

(Rev. 2004) *All information subject to change without notice.*
6SE483 0401 Copyright © 2004 DETROIT DIESEL CORPORATION

The camshaft is indexed to the hub by a dowel. The camshaft drive gear hub rides in a camshaft thrust plate, which is retained by two bolts. One of these bolts screws into the cylinder head, while the other bolt screws into the No. 1 camshaft bearing cap.

The camshaft thrust plate is sealed to the gear case by an O-ring which fits into a groove machined in the outer diameter of the thrust plate, which is retained by three (current) or two (former) bolts. One of these bolts screws into the cylinder head, while the other bolt screws into the No. 1 camshaft bearing cap. A diamond shaped rubber seal that fits into a groove machined in the rear camshaft thrust plate face, seals the camshaft thrust plate to the cylinder head and No. 1 camshaft cap. The dimple in the thrust plate must be installed at the 12 o'clock position to allow alignment of the thrust plate bolt holes with those in the cylinder head and No. 1 camshaft cap. See Figure 1-410.

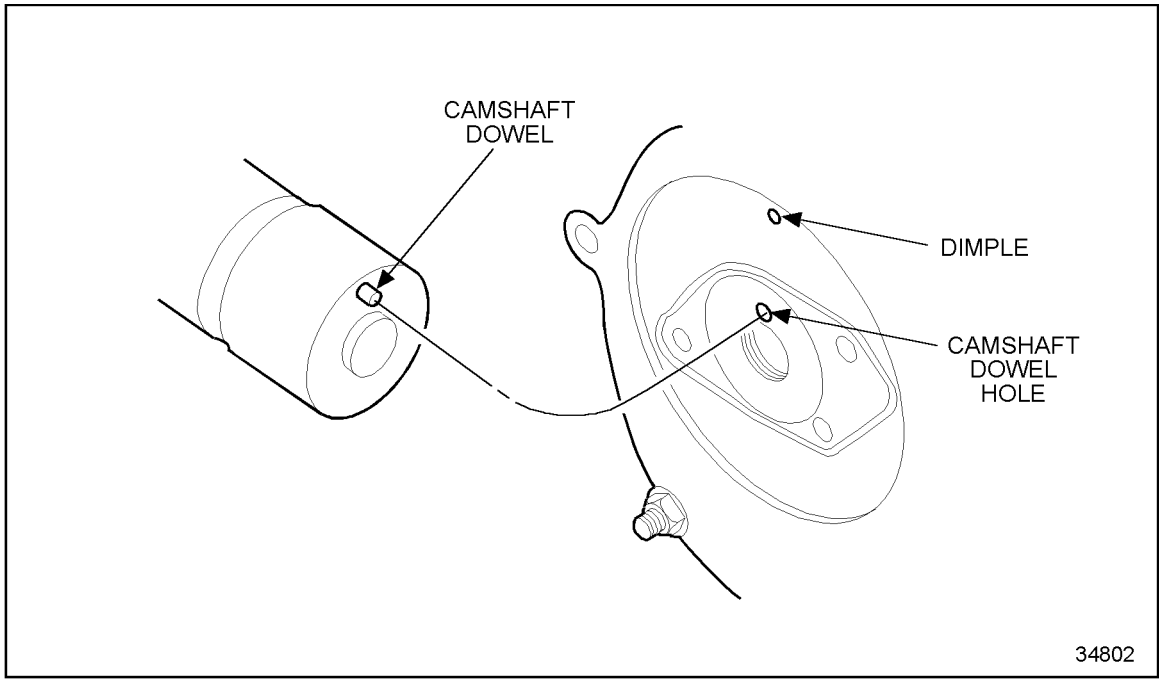

Figure 1-410 Camshaft Thrust Plate and Dowel Pin Location

The camshaft thrust plate can be moved horizontally in the gear case, to allow camshaft and cylinder head removal without damaging the thrust plate seal or removing the gear case cover. The camshaft drive gear will stay in mesh with its mating gear, and may be returned to its original position without re-timing the gears.

 Copyright © 2004 DETROIT DIESEL CORPORATION

1.25.1 Repair or Replacement of Camshaft Drive Gear

To determine if repair or replacement of the camshaft drive gear is necessary, preform the following procedure. See Figure 1-411.

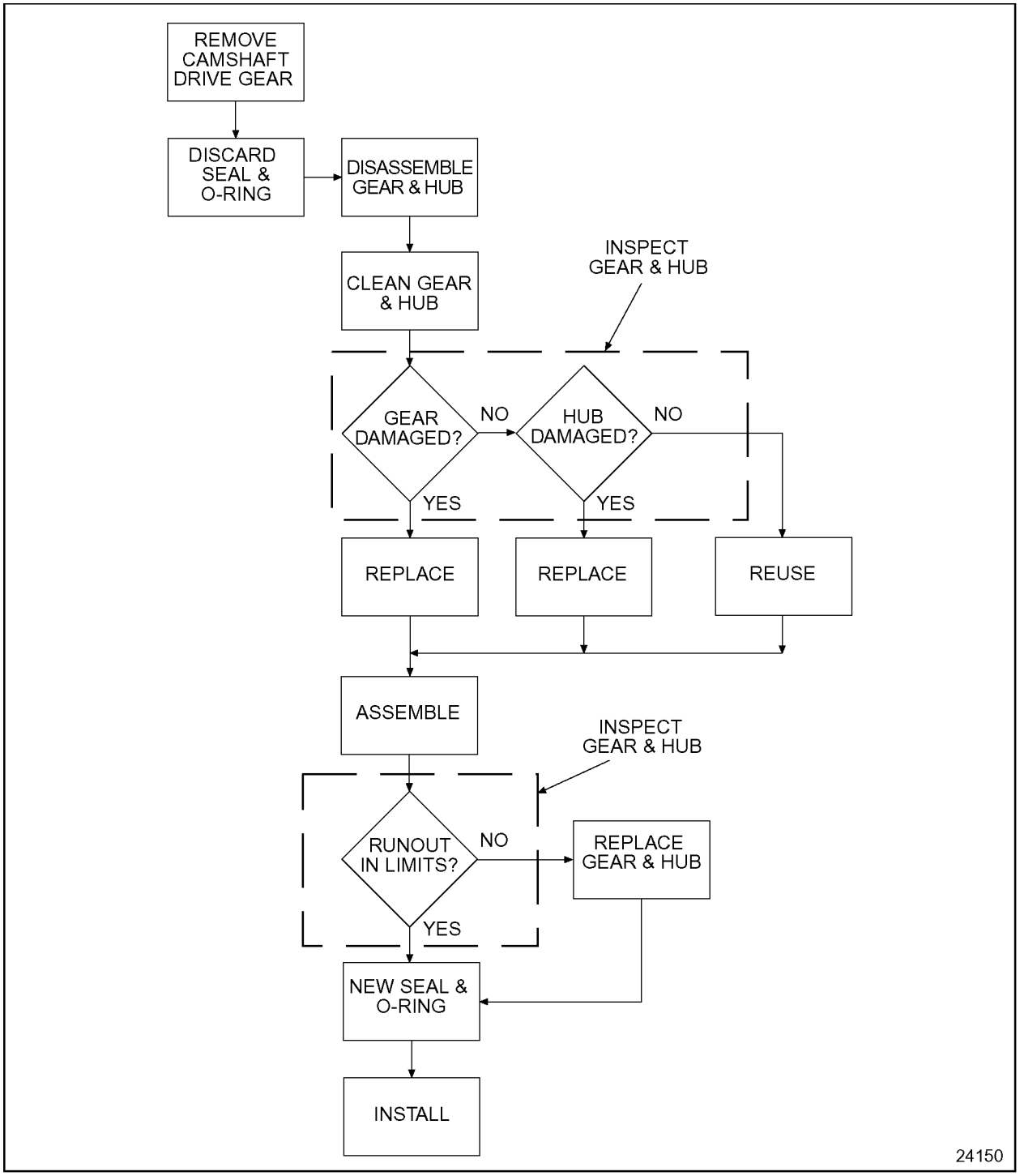

Figure 1-411 Flowchart for Repair or Replacement of Camshaft Drive Gear

(Rev. 2004) *All information subject to change without notice.*
6SE483 0401 Copyright © 2004 DETROIT DIESEL CORPORATION

1.25.2 Removal of Camshaft Drive Gear

Remove the camshaft drive gear as follows:

1. Remove the engine valve rocker cover. Refer to section 1.6.2 for one-piece rocker cover. Refer to section 1.6.3for two-piece rocker cover. Refer to section 1.6.5 for three-piece rocker cover.
2. Remove the camshaft drive gear access cover, fan bracket, (refer to section 4.7.3) and camshaft retaining bolt, refer to section 1.24.2.

NOTICE:
Use care when removing the camshaft thrust plate retaining bolts to prevent their accidental dropping into the gear case and causing engine damage.

3. Working through the access holes in the camshaft drive gear, remove the three (current) or two (former) bolts that retain the camshaft thrust plate to the cylinder head and No. 1 camshaft bearing cap. See Figure 1-412.

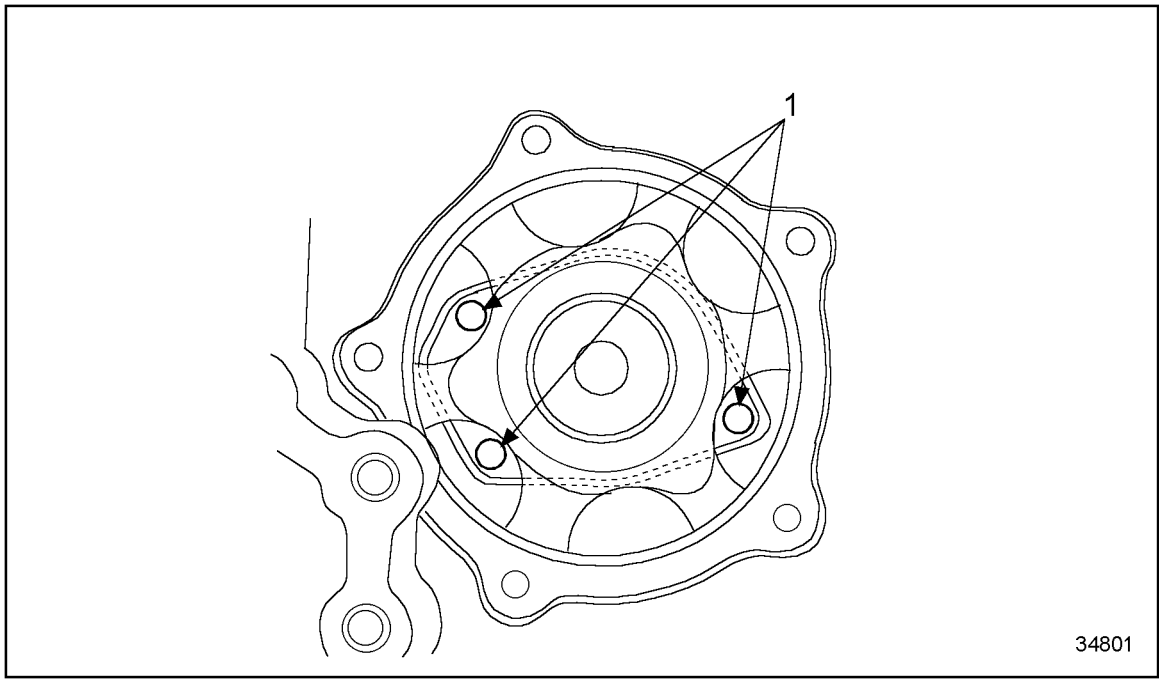

1. Camshaft Thrust Plate Mounting Bolt Locations

Figure 1-412 Camshaft Thrust Plate Mounting Bolt Locations

 Copyright © 2004 DETROIT DIESEL CORPORATION

4. Pull the cam gear thrust plate assembly forward as far as possible to separate the assembly from the camshaft using, J 35906.
5. Remove the gear case cover. Refer to section 1.10.2.
6. Using a fiber mallet or plastic hammer, tap the rear face of the camshaft thrust plate forward until it is free of the gear case.
7. Remove the camshaft thrust plate, hub, and camshaft drive gear as an assembly. See Figure 1-413.

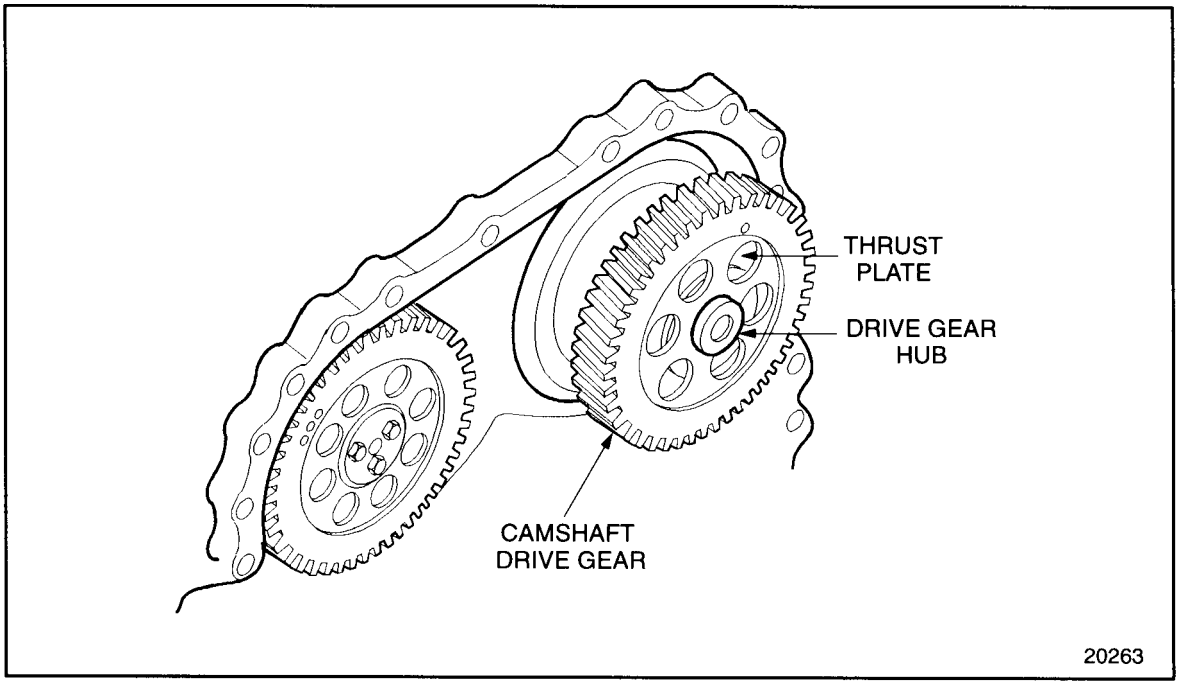

Figure 1-413 Camshaft Thrust Plate Assembly

8. Support the camshaft drive gear, with thrust plate facing down, on blocks.

(Rev. 2004) *All information subject to change without notice.*
6SE483 0401 Copyright © 2004 DETROIT DIESEL CORPORATION

9. Press the hub out of the camshaft drive gear until the hub separates from the camshaft thrust plate. See Figure 1-414.

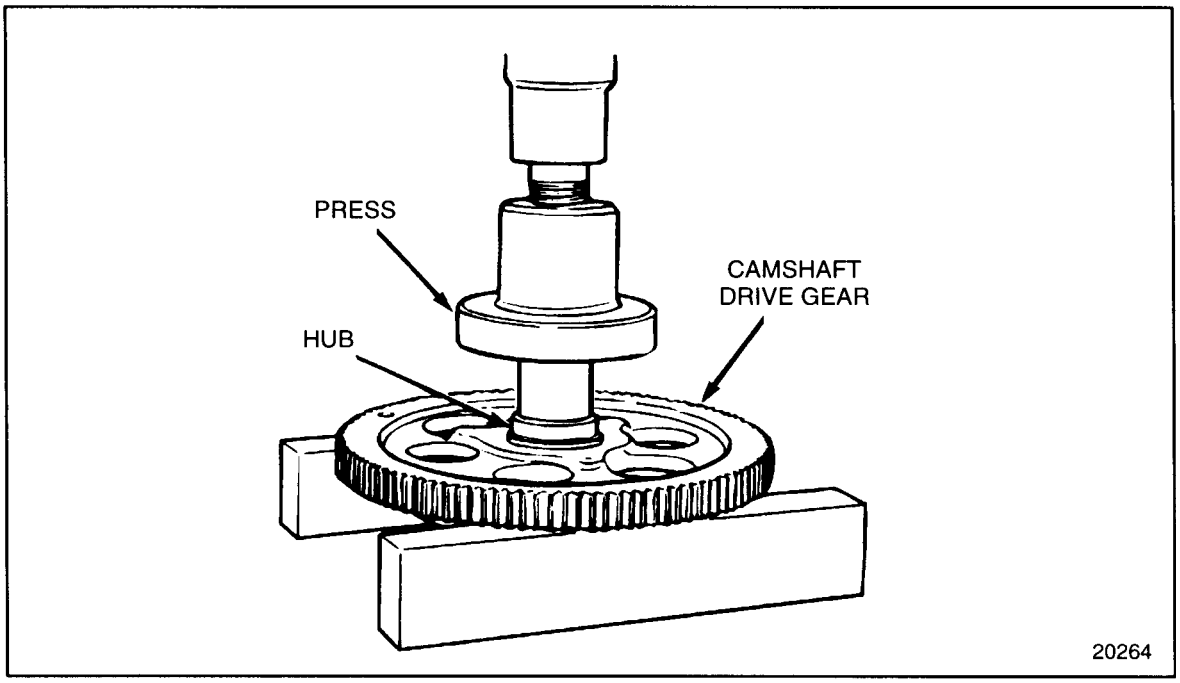

Figure 1-414 Camshaft Hub Removal

10. Remove the O-ring and seal from grooves in the camshaft thrust plate. Discard O-ring and seal.
11. Using a hooked seal extractor, remove the diamond seal from the thrust plate groove.

 Copyright © 2004 DETROIT DIESEL CORPORATION

1.25.2.1 Inspection of Camshaft Drive Gear

Inspect camshaft drive gear as follows:

1. Clean all parts with fuel oil.

CAUTION:

To avoid injury from flying debris when using compressed air, wear adequate eye protection (face shield or safety goggles) and do not exceed 40 psi (276 kPa) air pressure.

2. Dry them with compressed air.
3. Examine the camshaft drive gear teeth for scoring, pitting, excessive wear and cracking, peening of the Woodruff Key slot. If damage is found, replace as required.
4. Visually examine the camshaft drive gear hub for scoring, pitting, galling or cracking. If damaged, replace drive gear hub.

(Rev. 2004) *All information subject to change without notice.*
6SE483 0401 Copyright © 2004 DETROIT DIESEL CORPORATION

1.25.3 Installation of Camshaft Drive Gear

Install the camshaft drive gear, hub and thrust plate as follows:

1. Coat the contact surfaces of the hub and camshaft thrust plate with clean engine oil. See Figure 1-415.

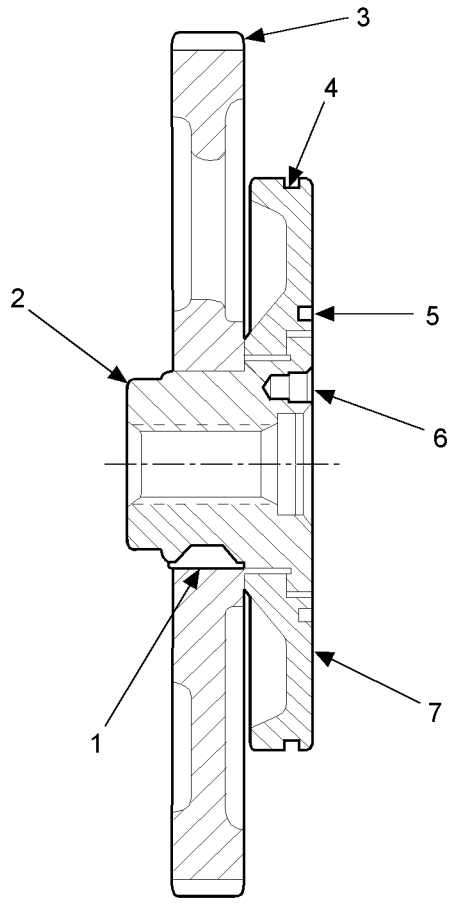

1. Woodruff Key
2. Hub, Camshaft Drive Gear
3. Drive Gear, Camshaft
4. Groove, O-ring
5. Groove, Seal
6. Dowel Hole, Camshaft
7. Thrust Plate, Camshaft

Figure 1-415 Cross-Section of Camshaft Drive and Related Parts

 Copyright © 2004 DETROIT DIESEL CORPORATION

2. Install the hub to the camshaft thrust plate.
3. Install the key into the keyway on the hub.
4. Apply a thin film of Lubriplate to the bore of the camshaft gear.
5. Support the hub from the engine side.

NOTICE:
A minimum force of 20 kN (4500 lb) must be obtained when pressing the gear on the hub which can distort camshaft gear if applied off center. Only apply force to the inner hub of the gear when pressing.

6. Align the keyway in the camshaft drive gear with the key in the hub and press the gear, onto the hub until it is firmly seated against the shoulder.

1.25.3.1 Testing of Camshaft Drive Gear Assembly Run-out

Measure the camshaft drive gear assembly run-out as follows:

1. While supporting the camshaft thrust plate on blocks, position the camshaft drive gear assembly with the engine side facing down.
2. Assemble a dial indicator and magnetic base with the indicator stem resting on the face of the camshaft drive gear, just inboard of the drive gear teeth. Zero the dial indicator.
3. Rotate the drive gear two full rotations while reading the total indicated run-out.

NOTE:
The total amount the dial indicator needle moves to the left and right of zero, added together, gives the total indicated run-out Total Indicator Reading (TIR).

[a] If the measured value is 0.114 mm (0.0045 in.) or less, then the drive gear assembly can be reused.

[b] If the measured value is more than 0.114 mm (0.0045 in.), the drive gear assembly parts must be replaced.

(Rev. 2004) *All information subject to change without notice.*
6SE483 0401 Copyright © 2004 DETROIT DIESEL CORPORATION

1.25.4 Installation of Camshaft Drive Gear - cont'd

Continue installing camshaft drive gear assembly as follows:

1. Coat the camshaft thrust plate O-ring with clean engine oil.
2. Install it into its groove in the camshaft thrust plate.
3. Install a new diamond seal in the camshaft thrust plate groove by pressing it in with the rounded end of the seal extractor or the flat end of a ruler.
4. Be sure the O-ring sealing surface of the gear case is clean and free of burrs.
5. Install the hub and camshaft thrust plate to the opening in the gear case. The depression in the rear face of the camshaft thrust plate must be positioned at 12 o'clock, see Figure 1-410, to align the retaining bolts in the thrust plate with those in the head and No. 1 camshaft cap.
6. Using a fiber mallet or plastic hammer, tap the camshaft drive gear at 90 degree intervals toward the engine, until the thrust plate bolts can be started in the cylinder head and No. 1 camshaft cap.

NOTICE:
Make sure camshaft dowel hole in camshaft drive hub is aligned with camshaft dowel prior to tightening thrust plate bolts. A misaligned hub can cause damage to the camshaft and thrust plate components

NOTICE:
Use care when installing the camshaft thrust plate retaining bolts to prevent accidentally dropping them into the gear case and causing damage to gear train.

7. Using a 13 mm socket and ratchet, tighten the thrust plate bolts alternately and evenly to draw the thrust plate straight into the gear case. Torque the bolts to 30 - 38 N·m (22-28 lb·ft).
8. Install the gear case cover. Refer to section 1.10.3.

NOTICE:
Always hold the camshaft drive gear stationary using camshaft drive gear retaining tool, J 35652 to prevent component damage, while loosening or tightening the camshaft drive gear-to-camshaft bolt.

NOTE:
Before installing the fan support bracket and camshaft drive gear access cover, it will be necessary to install and tighten the camshaft drive gear retaining bolt, and to measure and adjust the adjustable gear-to-camshaft drive gear lash.

 Copyright © 2004 DETROIT DIESEL CORPORATION

9. Install J 35652 and tighten the camshaft drive gear retaining bolt as follows:

NOTICE:
Failure to tighten the camshaft hub retaining bolt to the required torque may result in bolt loosening during engine operation, which may lead to camshaft alignment pin damage, altered engine timing, and erratic engine operation.

[a] Apply a small amount of International Compound #2®, or equivalent, to the bolt threads and underside of the bolt head.

[b] Install the bolt through the hub and thread into the camshaft.

[c] Torque bolt to 75 N·m (55 lb·ft).

[d] Turn the bolt an additional 120 degrees. See Figure 1-416.

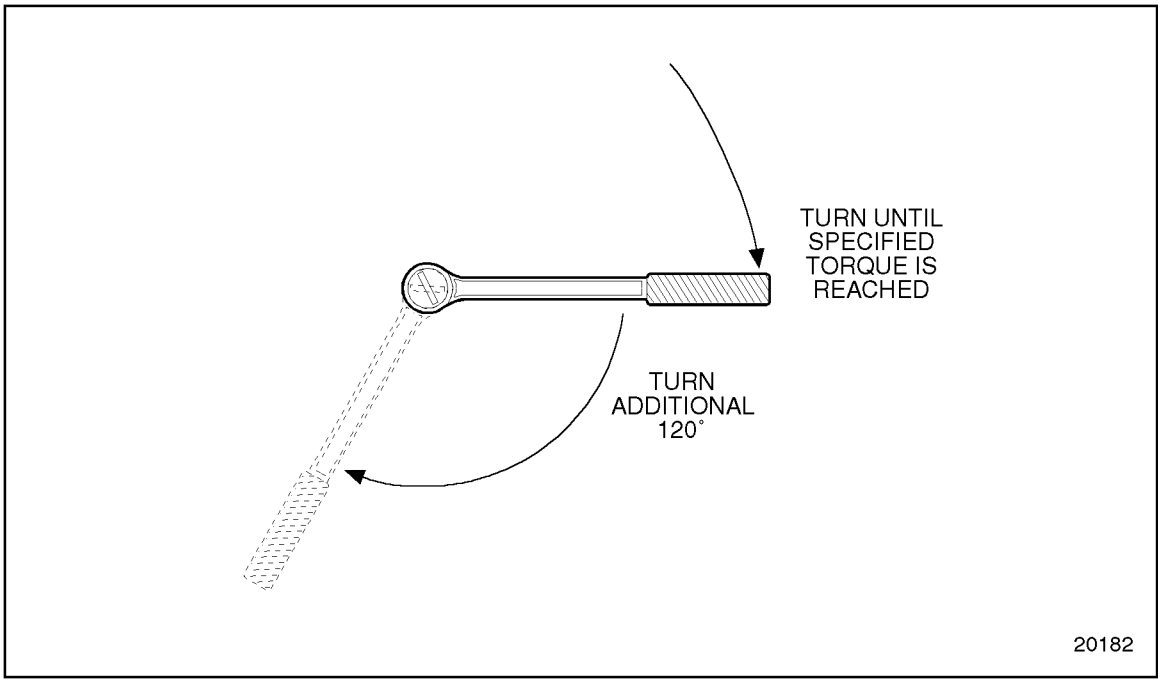

Figure 1-416 Torque Turn Limits

(Rev. 2004) *All information subject to change without notice.*
6SE483 0401 Copyright © 2004 DETROIT DIESEL CORPORATION

10. Check the gear train timing and adjustable idler gear-to-camshaft drive gear lash. Refer to section 1.22.2.1.
11. Install the camshaft drive gear access cover. Refer to section 1.10.3.
12. Install the fan bracket. Refer to section 4.7.6.
13. Install any components that were removed for access to the gear case cover.
14. Check the lubricating oil. Refer to section 13.13.1.
15. Check the coolant level. Refer to section 13.13.4.
16. Refer to section 11.8 for verification of proper camshaft drive gear installation.

 Copyright © 2004 DETROIT DIESEL CORPORATION

1.26 ADJUSTABLE IDLER GEAR ASSEMBLY

The adjustable idler gear is a straight-cut gear, mounted on a bushing pressed into the center of the gear, which in turn is supported on a stationary hub. The hub is secured to the gear case by a retaining plate, three studs, and locknuts. The studs are pressed into the gear case from the rear, and the flanged locknuts are installed after the gear, hub and hub retaining plate are installed. See Figure 1-417.

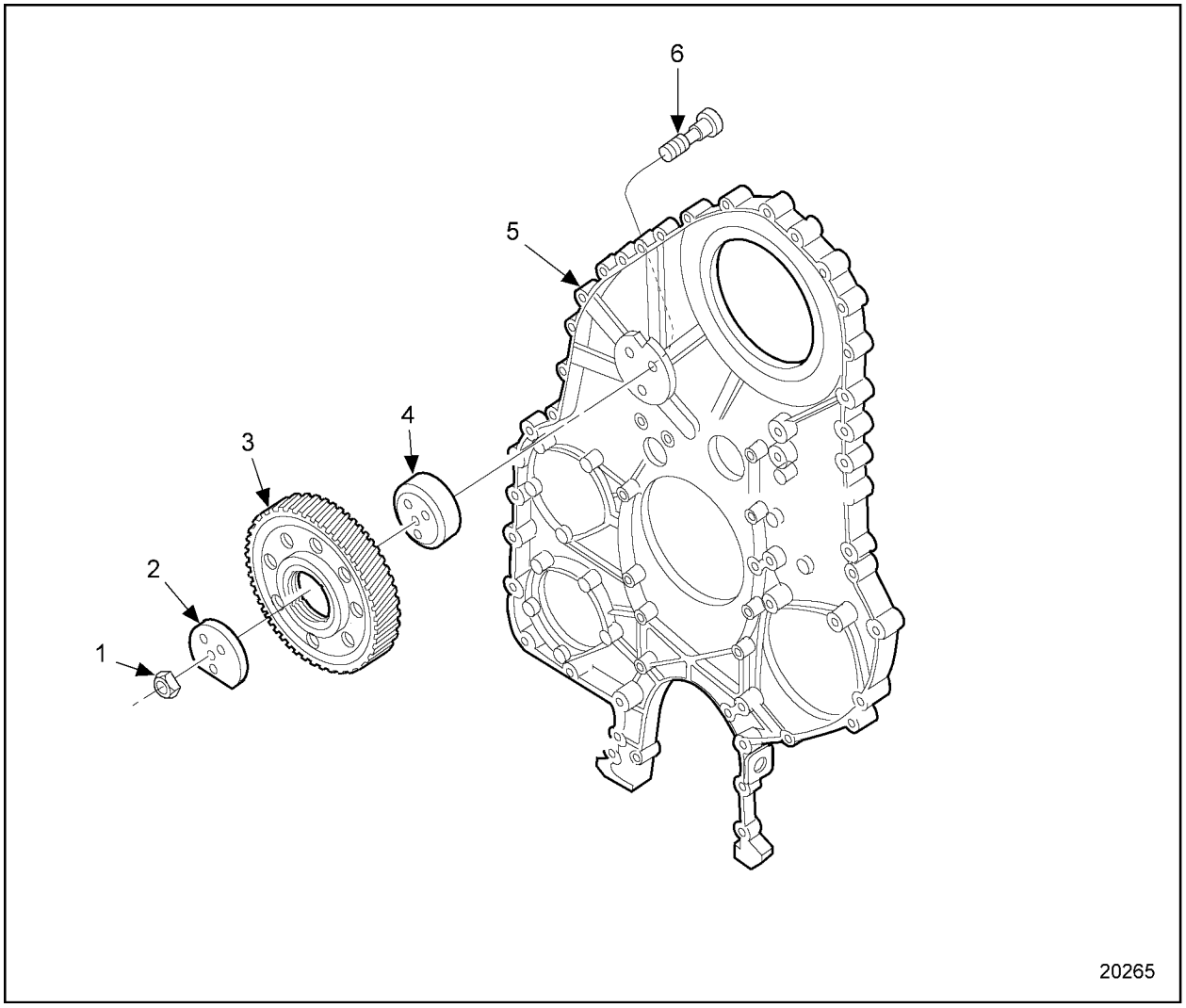

1. Locknut, Adjustable Idler Gear (3)
2. Retaining Plate, Adjustable Idler Gear Hub
3. Gear Assembly, Adjustable Idler
4. Idler Hub, Adjustable
5. Gear Case
6. Stud, Adjustable Idler Gear (3)

Figure 1-417 Adjustable Idler Gear and Related Parts

(Rev. 2004) *All information subject to change without notice.*
6SE483 0401 Copyright © 2004 DETROIT DIESEL CORPORATION

The adjustable idler gear is pressure lubricated by engine oil fed to a gallery drilled into the gear case. This gallery indexes with the cylinder block oil gallery. See Figure 1-418.

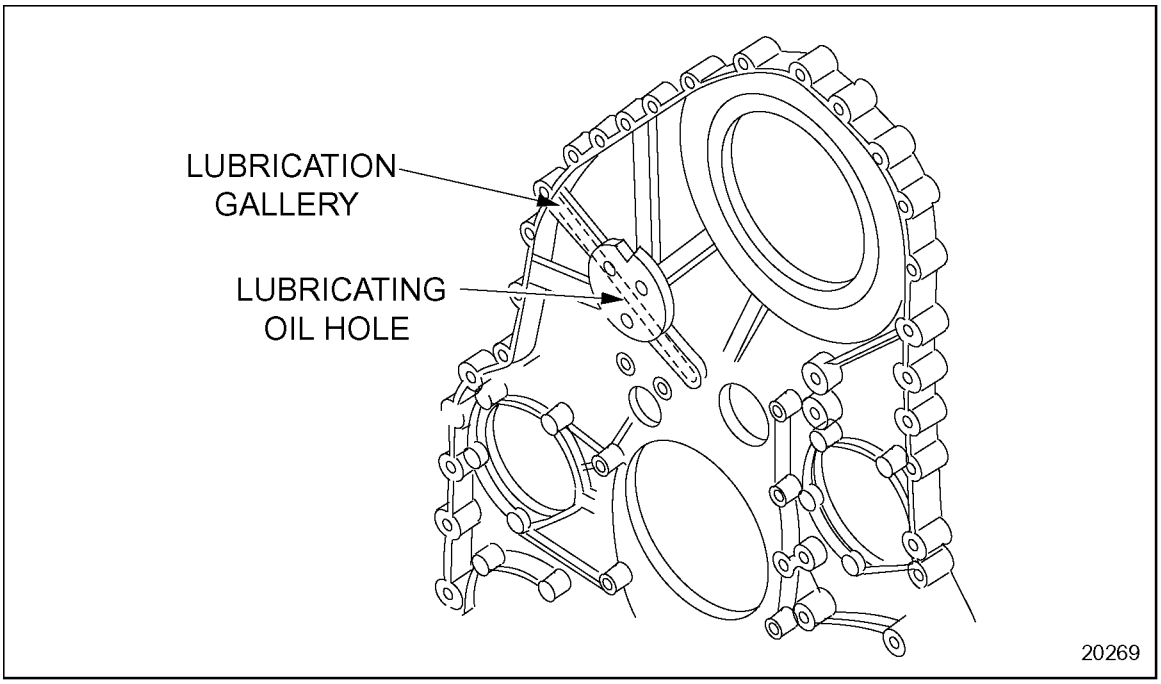

Figure 1-418 Adjustable Idler Gear Oil Gallery Location

The adjustable idler gear bushing has a series of machined grooves in the contact surface, for oil retention. The bushing is not serviced separately. If the bushing becomes worn or damaged, the gear and bushing must be replaced as an assembly.

 Copyright © 2004 DETROIT DIESEL CORPORATION

There are three bolt holes in the hub where it is inserted over the studs. See Figure 1-419.

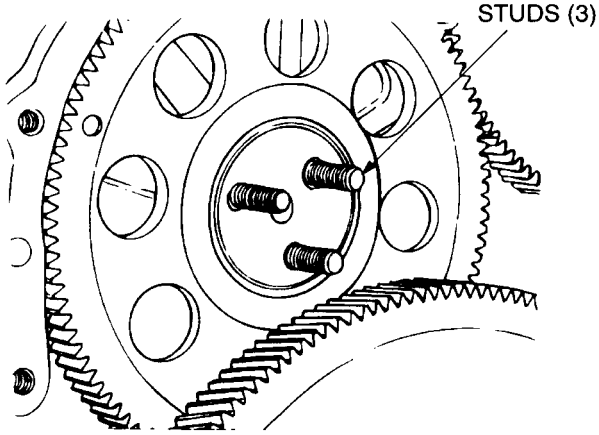

Figure 1-419 Adjustable Idler Gear Bolt Hole Location

(Rev. 2004) *All information subject to change without notice.*
6SE483 0401 Copyright © 2004 DETROIT DIESEL CORPORATION

The top two holes are elongated, to allow the idler gear and hub assembly to be moved in relationship to the camshaft drive gear. The bottom stud hole is not elongated, and is a close fit to the stud. This allows the adjustable idler gear to pivot on the bottom stud, so the adjustable idler gear to camshaft drive gear lash can be adjusted without changing the clearance between the adjustable idler gear and camshaft idler gear. The adjustable idler gear retaining plate has a flat on the bottom to clear the bull gear for removal and installation. See Figure 1-420.

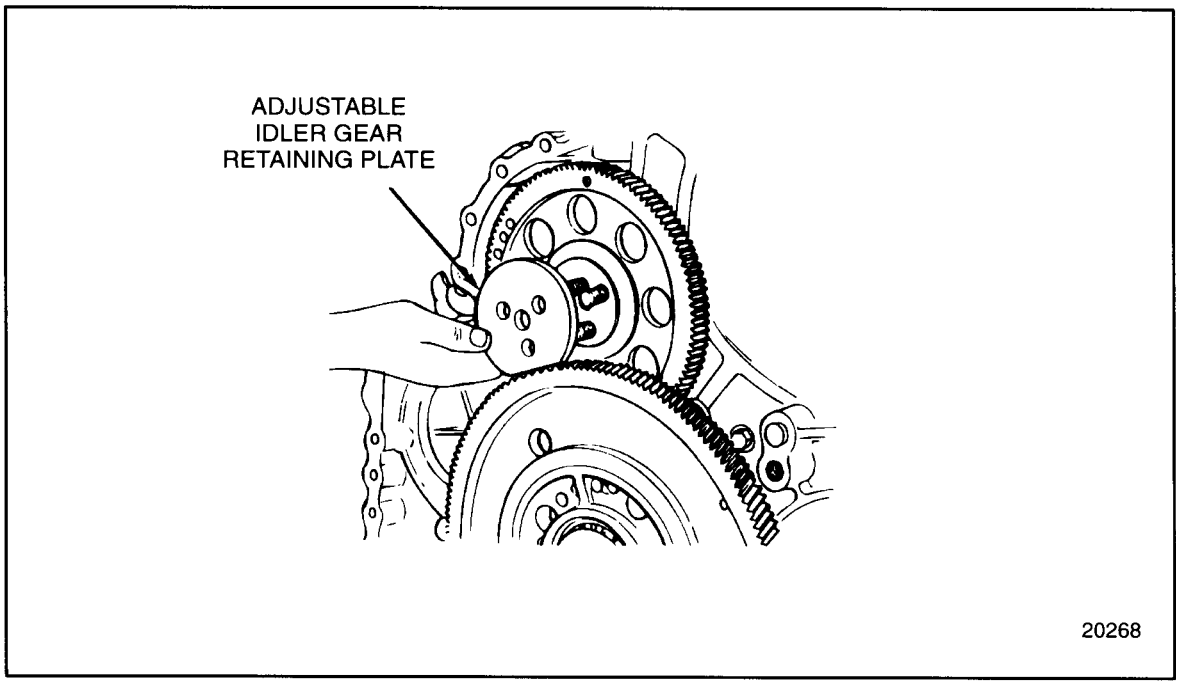

Figure 1-420 Adjustable Idler Gear Retaining Plate

 Copyright © 2004 DETROIT DIESEL CORPORATION

1.26.1 Repair or Replacement of Adjustable Idler Gear Assembly

To determine if repair or replacement of the adjustable idler gear assembly is necessary, perform the following procedure. See Figure 1-421.

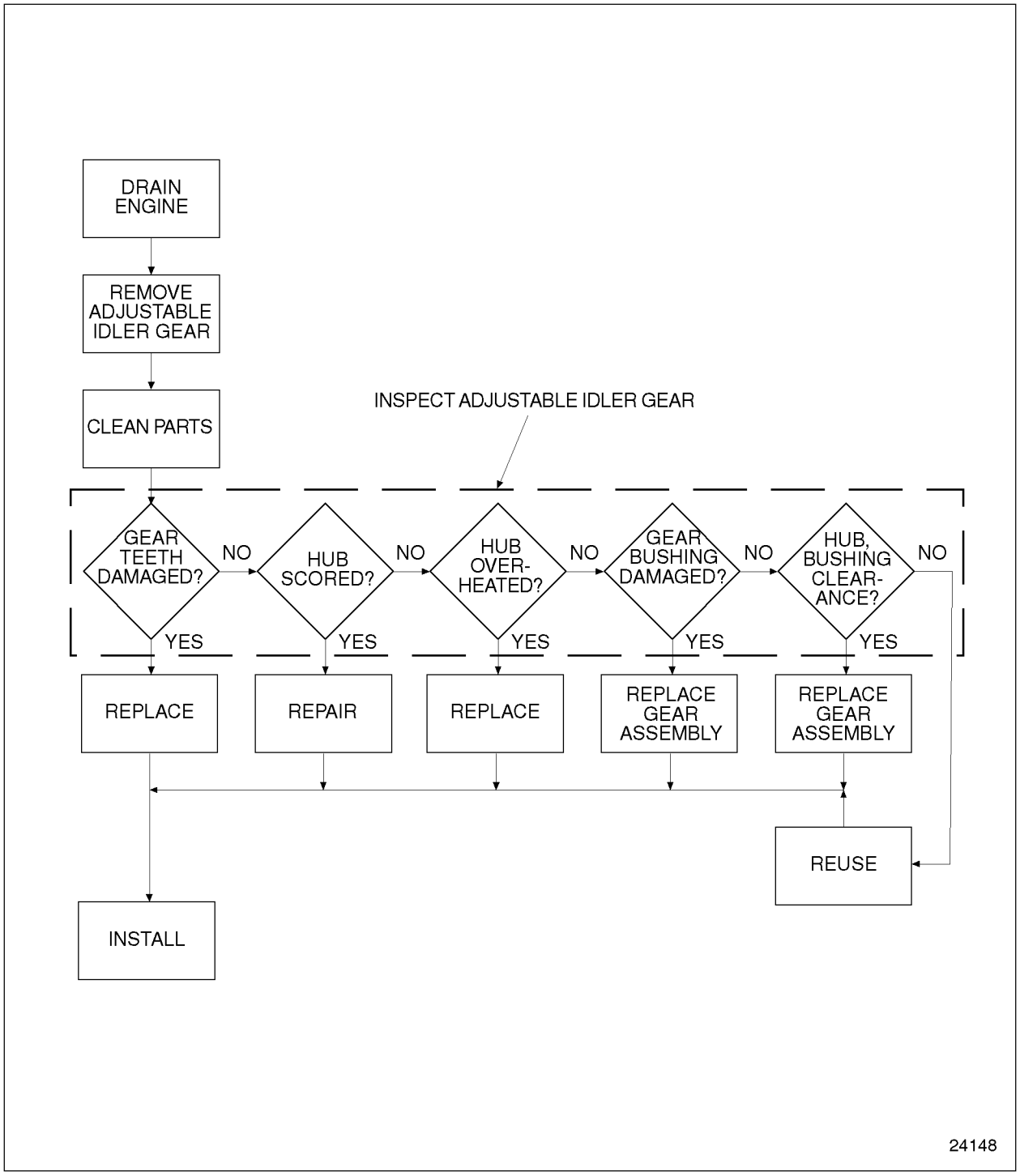

Figure 1-421 Flowchart for Repair or Replacement of Adjustable Idler Gear Assembly

(Rev. 2004) *All information subject to change without notice.*
6SE483 0401 Copyright © 2004 DETROIT DIESEL CORPORATION

1.26.2 Removal of Adjustable Idler Gear Assembly

Align gear train timing marks. See Figure 1-422.

NOTE:
In order to maintain the proper timing between the crankshaft and the camshaft, a series of timing marks are stamped or etched on the gears in the gear train. With the timing marks aligned, the gears can be replaced exactly as removed.

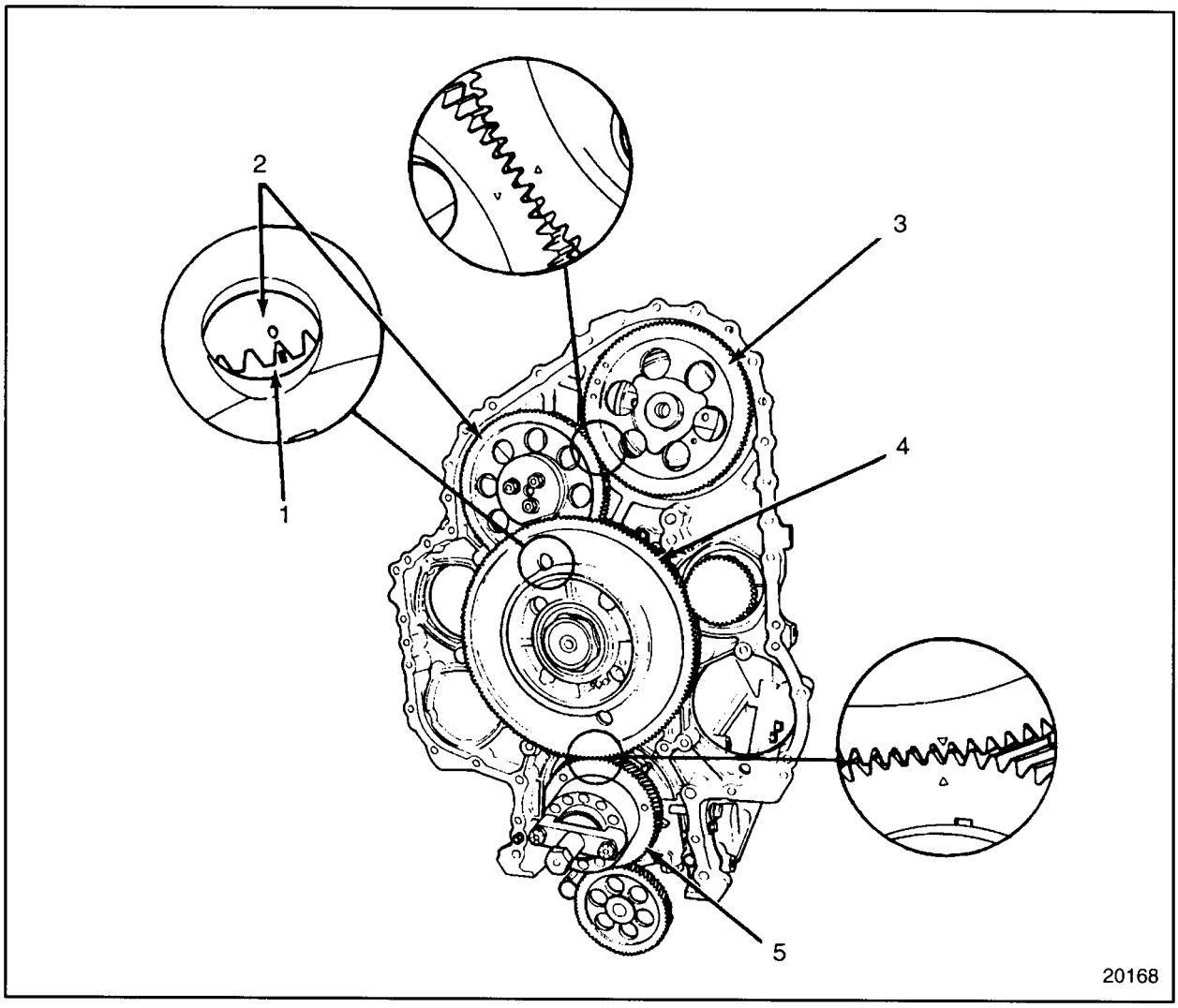

1. Idler Gear, Camshaft
2. Idler Gear, Adjustable
3. Drive Gear, Camshaft
4. Bull Gear
5. Timing Gear, Crankshaft

Figure 1-422 Engine Gear Train and Timing Marks

 Copyright © 2004 DETROIT DIESEL CORPORATION

Remove the adjustable idler gear assembly as follows:

1. Drain the cooling system. Refer to section 13.13.4.
2. Drain the engine lubricating oil. Refer to section 13.13.1.
3. Remove the oil pan. Refer to section 3.11.2.
4. Remove the gear case cover. Refer to section 1.10.2.
5. Secure J 36237, to the front of the crankshaft. See Figure 1-423.

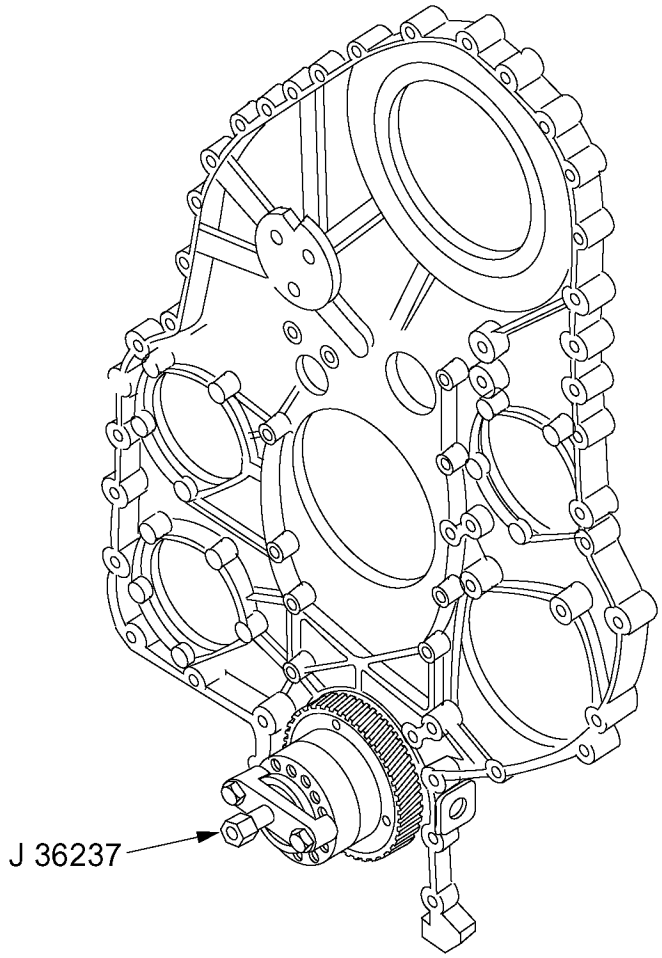

Figure 1-423 Barring Engine Over

(Rev. 2004) *All information subject to change without notice.*
6SE483 0401 Copyright © 2004 DETROIT DIESEL CORPORATION

NOTICE:
Always use crankshaft protector, J 35994, to guard against damage to the oil seal area of the crankshaft. When removing the bull gear or camshaft idler gear and hub assembly, do not come in contact with the oil seal contact surface of the crankshaft. If sealing surface is scratched, an oil leak may result.

6. Install J 35994, to the oil seal contact area of the crankshaft.
7. Working through the four access holes in the bull gear and camshaft idler assembly, remove two of the four bolts that secure the bull gear and camshaft idler gear hub to the cylinder block. See Figure 1-424.

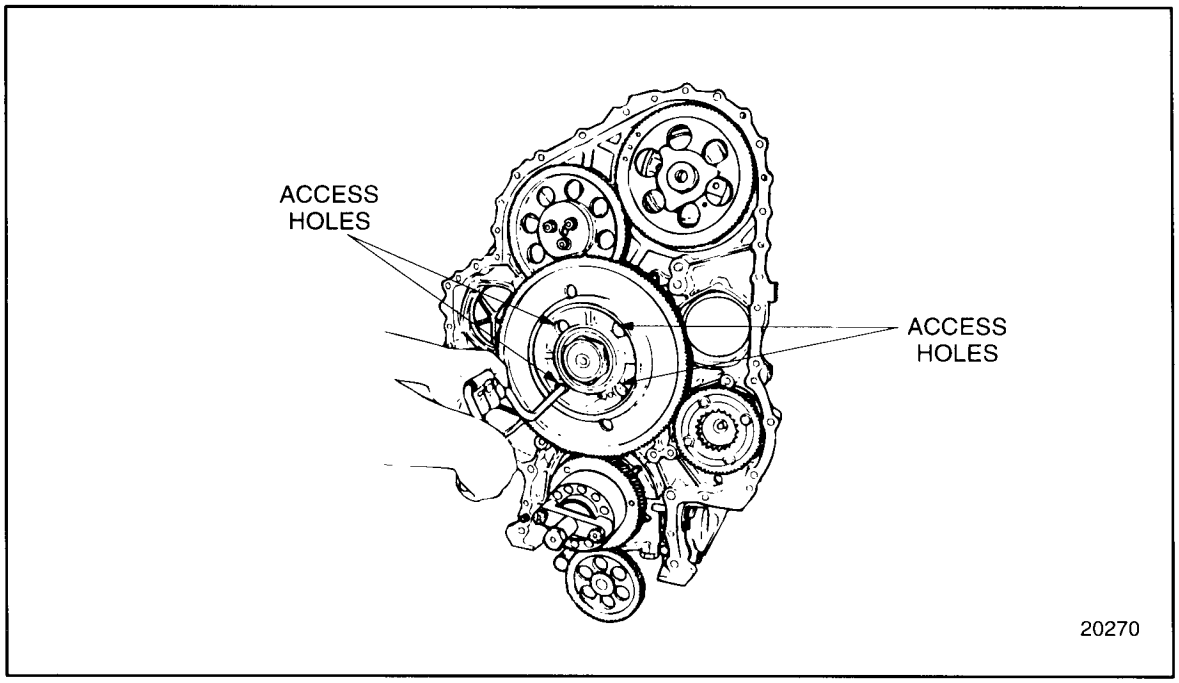

Figure 1-424 Removing Bull Gear and Camshaft Idler Gear Hub

8. Install J 35785, to the holes from where the bolts were removed.
9. Remove the remaining two bull gear and camshaft idler gear hub bolts.
10. Grasp the bull gear and remove the bull gear and camshaft idler gear and hub assembly from its recess in the cylinder block.
11. Remove the three adjustable idler gear flanged locknuts.
12. Remove the adjustable idler gear hub retaining plate.
13. Remove the adjustable idler gear and hub.

 Copyright © 2004 DETROIT DIESEL CORPORATION

1.26.2.1 Inspection of Adjustable Idler Gear Assembly

Inspect the adjustable idler gear assembly as follows:

1. Wash the adjustable idler gear, hub, and retaining plate thoroughly in clean fuel oil.

CAUTION:

To avoid injury from flying debris when using compressed air, wear adequate eye protection (face shield or safety goggles) and do not exceed 40 psi (276 kPa) air pressure.

2. Dry with compressed air.
3. Examine the gear teeth for evidence of scoring, pitting and wear.

NOTE:
If gear teeth are damaged, also inspect the other gears in the gear train.

   [a] If severely damaged or worn, replace the gear.

   [b] If no damage is found, reuse the gear.

4. Inspect the contact surface of the hub for scoring or evidence of overheating (blue discoloration).

   [a] If hub has blue discoloration, replace the hub.

   [b] If hub has no blue discoloration, reuse the hub.

   [c] If slight irregularities are present, use a fine stone or emery cloth to remove them.

5. Check the lubrication hole and gallery in the gear case for blockage.

   [a] If the lubrication hole is blocked, clear the lubrication hole.

   [b] If the lubrication hole is not clogged, no cleaning is required.

6. Inspect the bushing contact surface of gear and bushing assembly for signs of scoring, discoloration due to overheating, or excessive wear.

   [a] If the surface of the bushing is not acceptable, replace the gear and bushing as an assembly.

   [b] If the surface has no damage, reuse the bushing assembly.

7. Measure the clearance between the bushing and hub.

   [a] If the clearance is more than 0.033 - 0.076 mm (0.0013 -0.0030 in.), replace the gear and bushing as an assembly.

   [b] If the clearance is to specification, 0.033 - 0.076 mm (0.0013 -0.0030 in.), reuse the gear and bushing assembly.

(Rev. 2004) *All information subject to change without notice.*
6SE483 0401 Copyright © 2004 DETROIT DIESEL CORPORATION

1.26.3 Installation of Adjustable Idler Gear Assembly

Install the adjustable idler gear and related parts as follows:

1. Coat the contact surfaces of the hub and idler gear bushing with clean engine oil.
2. Install the hub, with the word "OUT" facing outward, to the three studs in the gear case with the oil supply hole in the hub towards the gear case.
3. Align the timing marks on the face of the adjustable idler gear and camshaft drive gear and install the adjustable idler gear to its hub. See Figure 1-425.

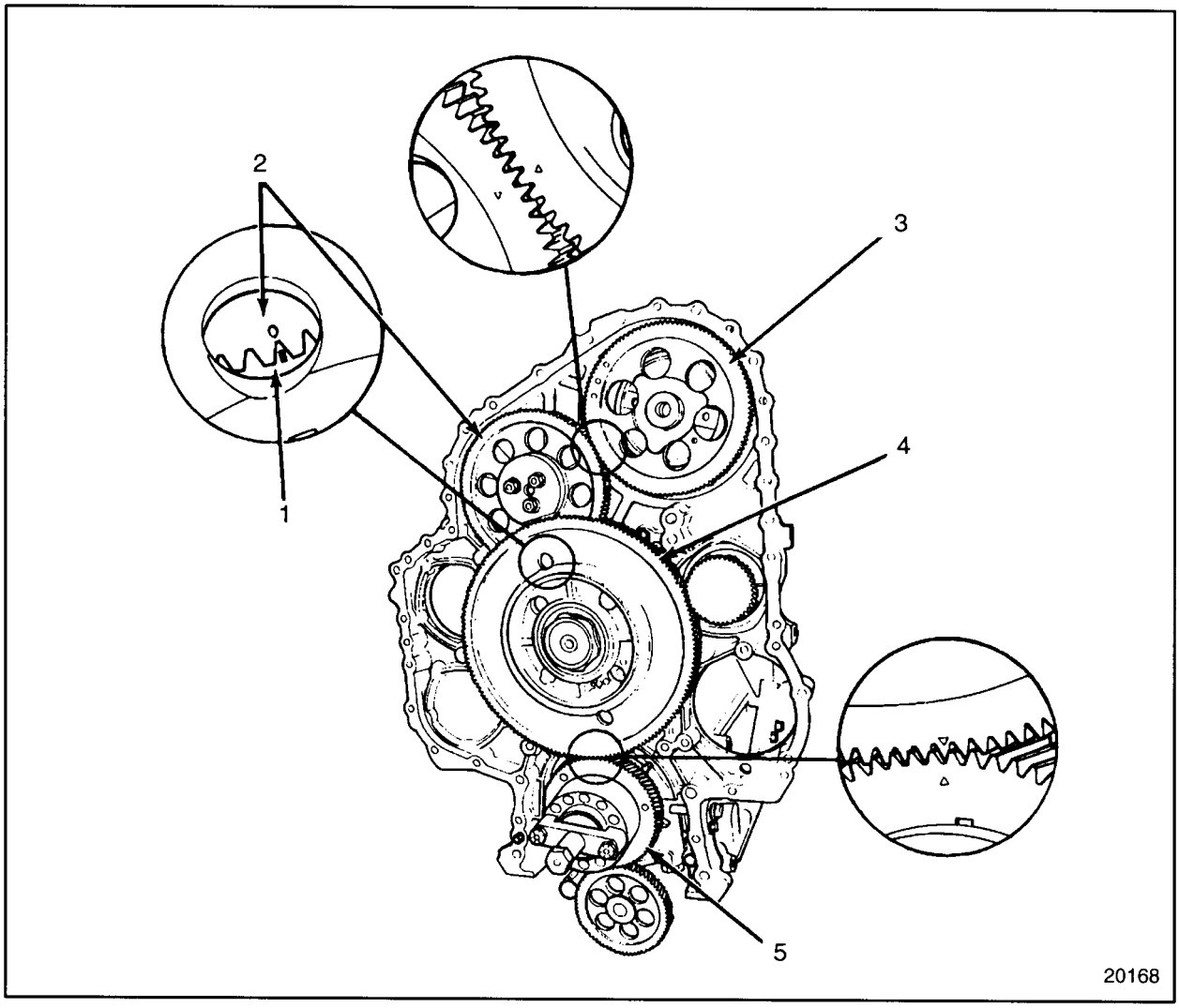

1. Idler Gear, Camshaft
2. Idler Gear, Adjustable
3. Drive Gear, Camshaft
4. Bull Gear
5. Timing Gear, Crankshaft

Figure 1-425 Engine Gear Train and Timing Marks

 Copyright © 2004 DETROIT DIESEL CORPORATION

4. Install thrust plate with the relief at the bottom. See Figure 1-424.
5. Install the three flanged locknuts, finger-tighten.
6. Install J 35785, and J 35994 to the cylinder block.
7. Coat the bearings and contact surfaces of the bull gear assembly with clean engine oil.
8. Looking through the inspection hole in the bull gear, align the timing marks on the camshaft idler gear (mounted to the rear of the bull gear) with the adjustable idler gear. Align the timing marks on the bull gear and crankshaft timing gear. Refer to section 1.22.2.1. Install the bull gear hub assembly to the cylinder block. See Figure 1-425.
9. Install the bull gear hub assembly to the cylinder block. Refer to section 1.27.3.
10. Install the gear case cover. Refer to section 1.10.3.
11. Adjust the gear lash between the adjustable idler gear and camshaft drive gear. Refer to section 1.22.2.1.
12. Install any other components that were removed for access to the gear case cover.
13. Refer to section 11.8 for verification of proper adjustable idler gear assembly installation.

(Rev. 2004) *All information subject to change without notice.*
6SE483 0401 Copyright © 2004 DETROIT DIESEL CORPORATION

1.27 BULL GEAR AND CAMSHAFT IDLER GEAR ASSEMBLY

The bull gear and camshaft idler gear assembly is centrally located beneath the gear case cover. The larger bull gear is directly driven by the crankshaft timing gear. The bull gear directly drives all of the gear-driven engine accessories (except the oil pump), meshing with drive gears for the fuel pump drive, air compressor drive and power steering pump (if so equipped), raw water pump (if so equipped), water pump and accessory and alternator drive. See Figure 1-426.

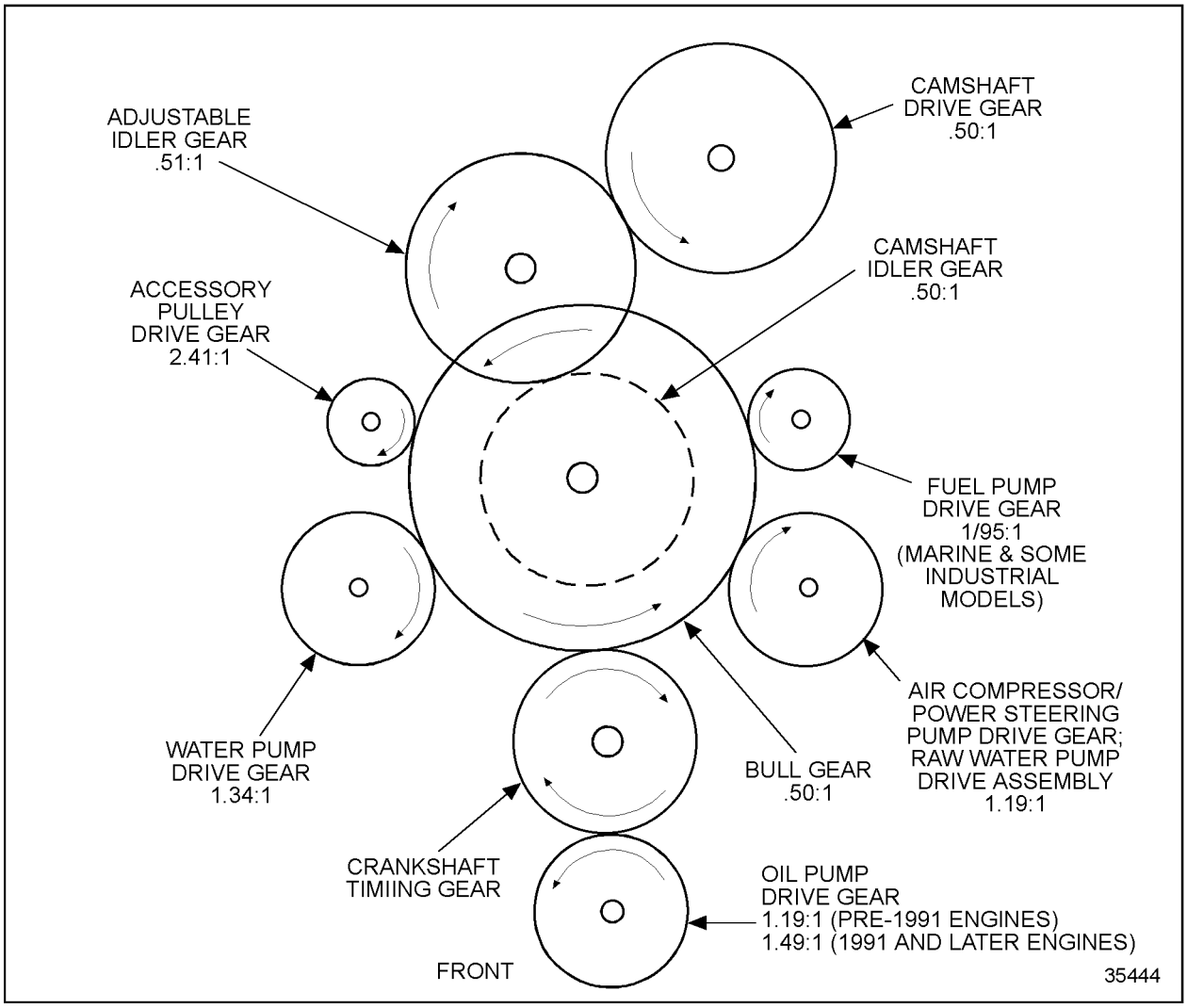

Figure 1-426 Engine Gear Train

The smaller camshaft idler gear is located behind the bull gear on the same carrier, and turns at the same speed as the bull gear. The camshaft idler gear drives an adjustable idler gear, mounted on a separate hub in the gear case. The adjustable idler gear drives the camshaft drive gear. The gear ratio of each gear in relationship to the crankshaft timing gear is shown directly below the gear title.

 Copyright © 2004 DETROIT DIESEL CORPORATION

The bull gear and camshaft idler gear are a press-fit to the bull gear and camshaft idler gear carrier. See Figure 1-427.

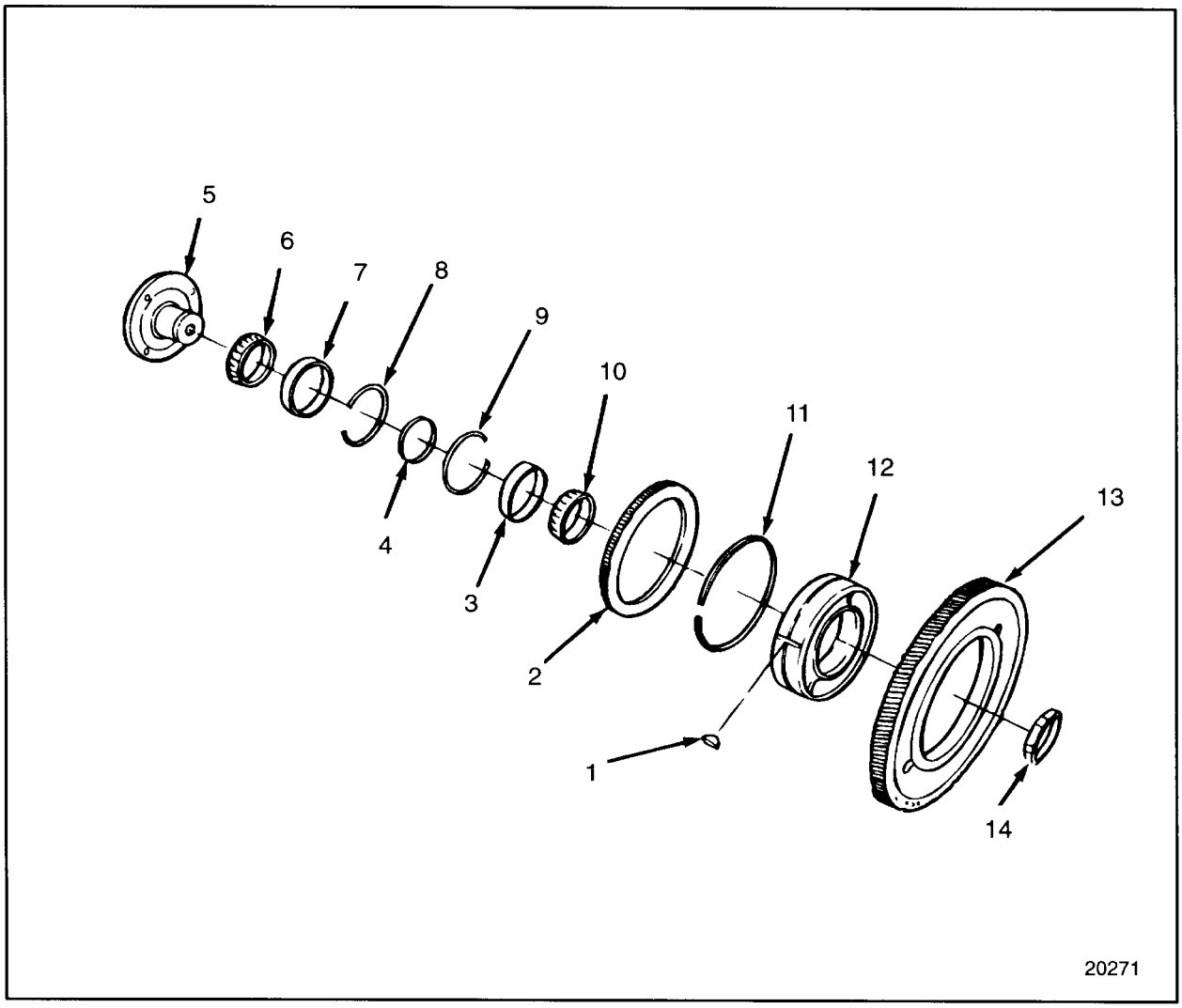

1. Woodruff Key
2. Camshaft, Idler Gear
3. Bearing Race, Outer
4. Spacer Ring, Small
5. Hub
6. Bearing, Inner
7. Bearing Race, Inner
8. Snap Ring, Inner
9. Snap Ring, Outer
10. Bearing, Outer
11. Spacer Ring, Large
12. Carrier
13. Bull Gear
14. Thread Nut, Left Hand

Figure 1-427 Bull Gear and Related Parts

(Rev. 2004) *All information subject to change without notice.*
6SE483 0401 Copyright © 2004 DETROIT DIESEL CORPORATION

Both gears are keyed to the carrier by the same key. For units built prior to 6R11886, a spacer ring fits in a groove in the carrier between the bull gear and the camshaft idler gear. For units built after 6R11887, this spacer was incorporated in the carrier. The carrier is supported by two tapered roller bearing assemblies that ride on a hub bolted to the engine block by four bolts. A selective-size spacer between the two bearing assemblies is used to obtain the correct bearing preload.

NOTE:
The bull gear and camshaft idler gear assembly is retained to the hub by a left-hand threaded nut.

 Copyright © 2004 DETROIT DIESEL CORPORATION

The camshaft must be in time with the crankshaft timing gear. Since there are three gears between them, timing marks have been stamped or etched on the face of the gears to facilitate correct gear train timing. Refer to section 1.22.2.1for gear train timing procedures. See Figure 1-428.

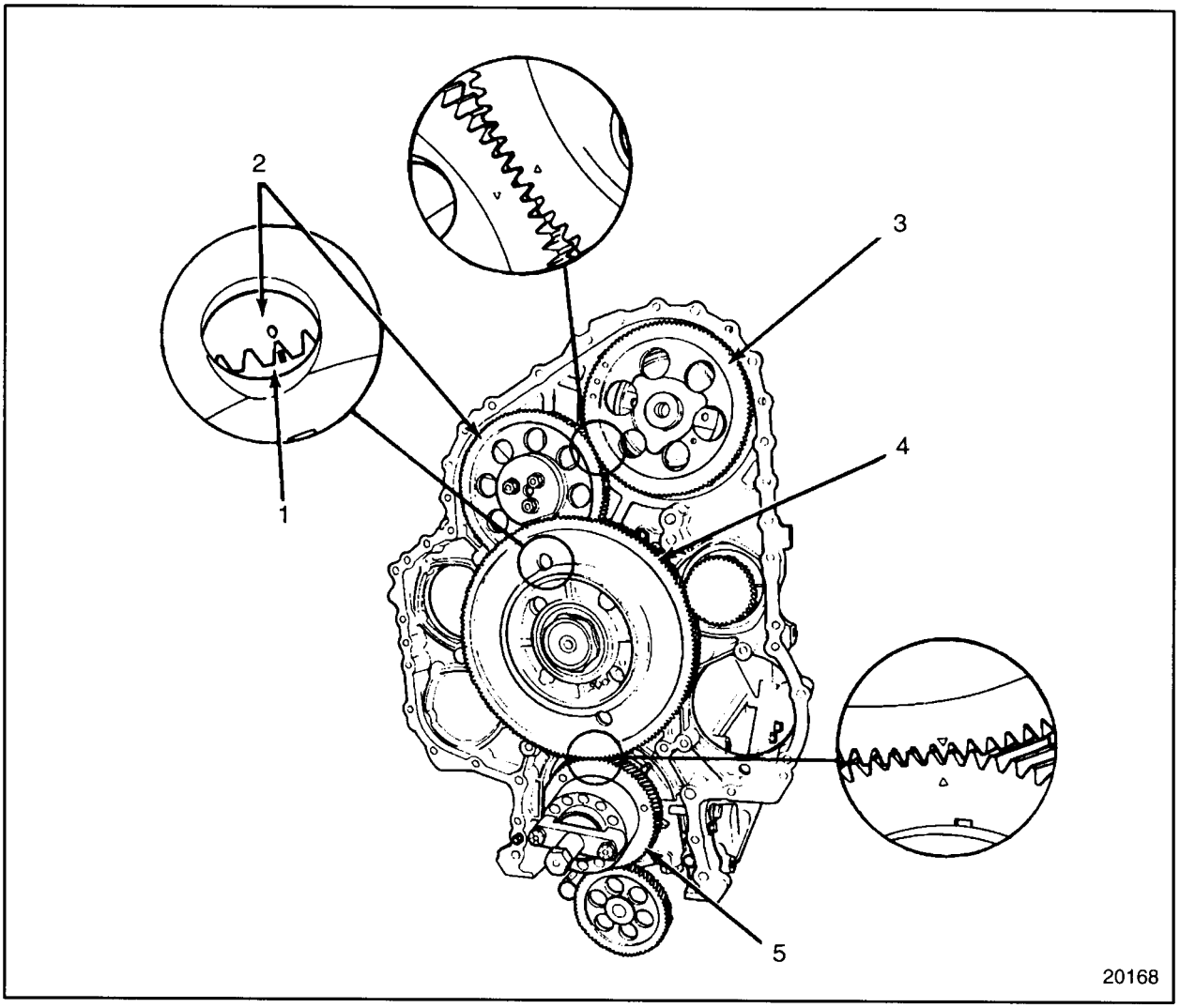

1. Idler Gear, Camshaft
2. Idler Gear, Adjustable
3. Drive Gear, Camshaft
4. Bull Gear
5. Timing Gear, Crankshaft

Figure 1-428 Engine Gear Train and Timing Marks

(Rev. 2004) *All information subject to change without notice.*
6SE483 0401 Copyright © 2004 DETROIT DIESEL CORPORATION

The backlash between the various mating gears in the gear train should be 0.051-0.229 mm (0.002 -0.009 in.), and should not exceed 0.305 mm (0.012 in.) backlash between worn gears. Refer to section 1.22.2.1.

NOTE:
All gear lash measurements should be taken with engine in an upright position.

The bull gear and camshaft idler gear assembly is pressure-fed lubricating oil through two holes in the bull gear recess area of the engine block. See Figure 1-429.

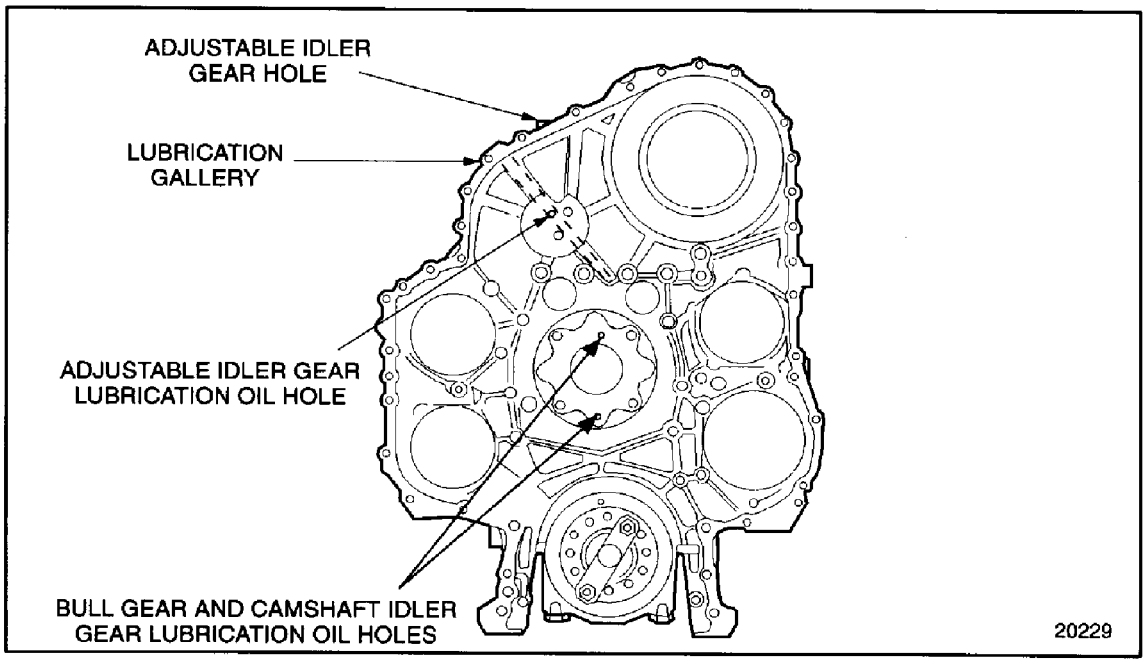

Figure 1-429 Bull Gear and Camshaft Idler Gear Lubricating Oil Hole Locations

These two holes are drilled into a main oil gallery. An internal oil passage, cast into the bull gear and camshaft idler gear hub relief at the rear of the hub indexes with these two oil holes to supply oil through a drilled passage to the two roller bearing assemblies.

1.27.1 Repair or Replacement of Bull Gear and Camshaft Idler Gear Assembly

To determine if repair or replacement of the bull gear and camshaft idler gear assembly is necessary, perform the following procedure. See Figure 1-430.

 Copyright © 2004 DETROIT DIESEL CORPORATION

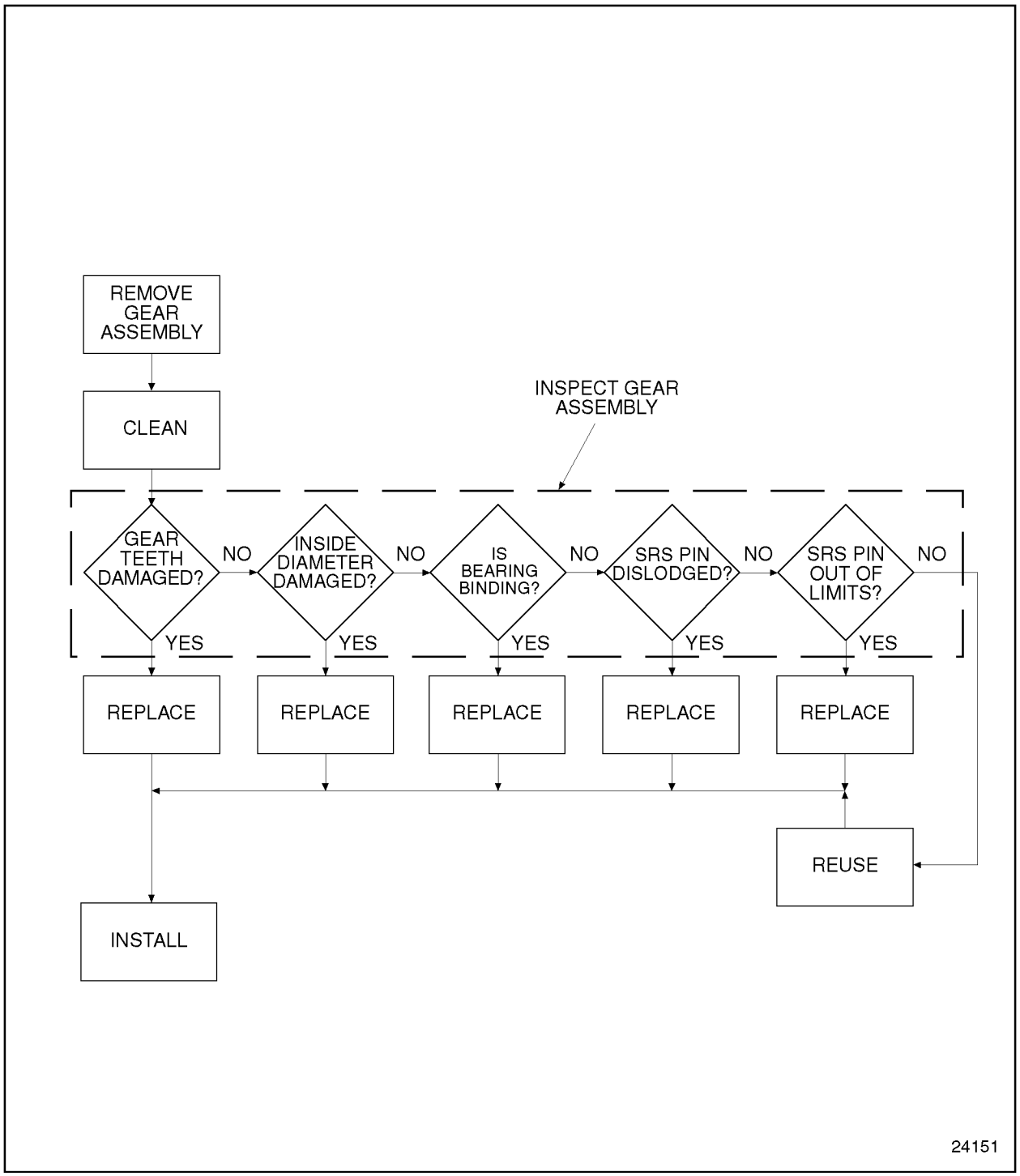

Figure 1-430 Flowchart for Repair or Replacement of Bull Gear and Camshaft Idler Gear Assembly

1.27.2 Removal of Bull Gear and Camshaft Idler Gear Assembly

Remove the bull gear and camshaft idler gear assembly as follows:

(Rev. 2004) *All information subject to change without notice.*
6SE483 0401 Copyright © 2004 DETROIT DIESEL CORPORATION

1. Remove the engine gear case cover. Refer to section 1.10.2.
2. Install J 35994, to the oil seal contact area of the crankshaft. See Figure 1-431.

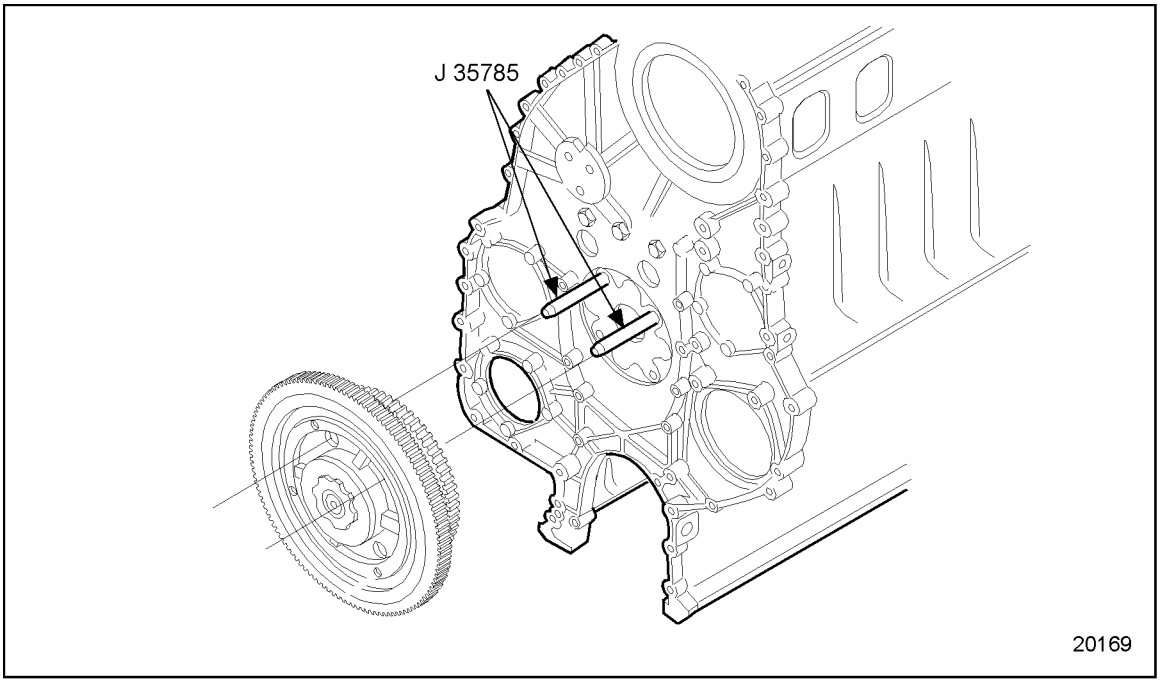

Figure 1-431 Bull Gear Guide Studs

 Copyright © 2004 DETROIT DIESEL CORPORATION

NOTICE:
Use care when removing the bull gear and camshaft idler gear assembly from the engine so that it does not come in contact with the oil seal contact surface of the crankshaft. If this sealing surface is scratched, an oil leak may result.

3. Working through the four access holes in the bull gear carrier, loosen and remove two of the four bolts that secure the bull gear assembly to the cylinder block. See Figure 1-432.

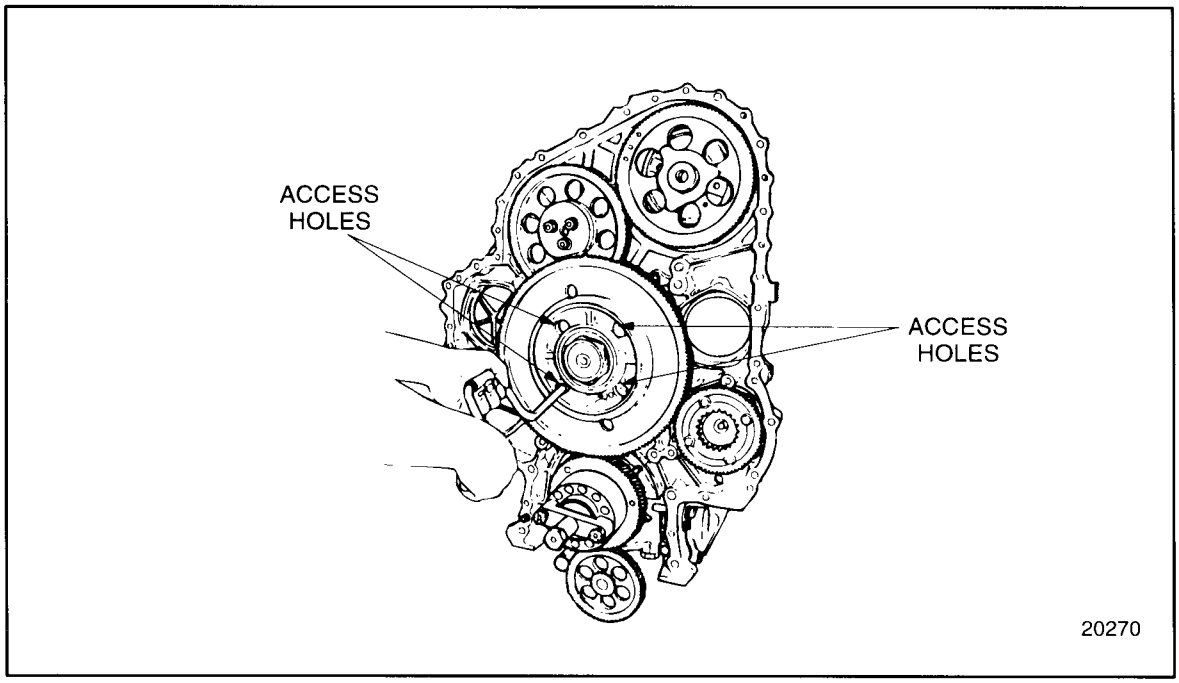

Figure 1-432 Removing Bull Gear Assembly Retaining Bolts

4. Install J 35785, into the holes the bolts from where they were removed.
5. Remove the two remaining bull gear retaining bolts.
6. Grasp the bull gear and pull the assembly straight out of the recess in the cylinder block.

(Rev. 2004) *All information subject to change without notice.*
6SE483 0401 Copyright © 2004 DETROIT DIESEL CORPORATION

1.27.2.1 Inspection of Bull Gear and Camshaft Idler Gear Assembly

Inspect the bull gear and camshaft idler gear assembly as follows:

1. Clean the bull gear and idler gear assembly in clean fuel oil.

CAUTION:

To avoid injury from flying debris when using compressed air, wear adequate eye protection (face shield or safety goggles) and do not exceed 40 psi (276 kPa) air pressure.

2. Dry the bull gear and idler gear assembly with compressed air.
3. Visually examine the gear teeth on both the bull gear and idler gear for evidence of scoring, cracking, pitting, and wear.
   [a] If either gear is damaged, replace the bull gear and idler gear assembly.
   [b] If either gear is not damaged, reuse the bull gear and idler gear assembly.
4. Visually examine the inner diameter of both gears, where they are pressed on the carrier for evidence of gear movement.
   [a] If there is any evidence of gear movement, replace the bull gear and idler gear assembly.
   [b] If damage is not found, reuse the bull gear and idler gear assembly.
5. Place the bull gear and idler gear assembly on a bench, resting on the hub. Inspect the bearings for signs of distress or overheating.
   [a] If there is any bearing distress, replace the bull gear and idler gear assembly.
   [b] If damage is not found, reuse the bull gear and idler gear assembly.
6. Coat the bearings with clean engine oil.
7. Slowly rotate the gears on the hub looking for binding of the bearing.
   [a] If the gears do not rotate freely on the hub, replace the bull gear and idler gear assembly.
   [b] If the gears rotate freely, reuse the bull gear and idle gear assembly.

 Copyright © 2004 DETROIT DIESEL CORPORATION

NOTICE:
Care should be taken not to damage or dislocate the pin. The pin is installed at a set dimension which is used by the Synchronous Reference Sensor (SRS). Damage to pin will cause loss of engine performance.

Inspect the SRS pin in the bull gear as follows. See Figure 1-433.

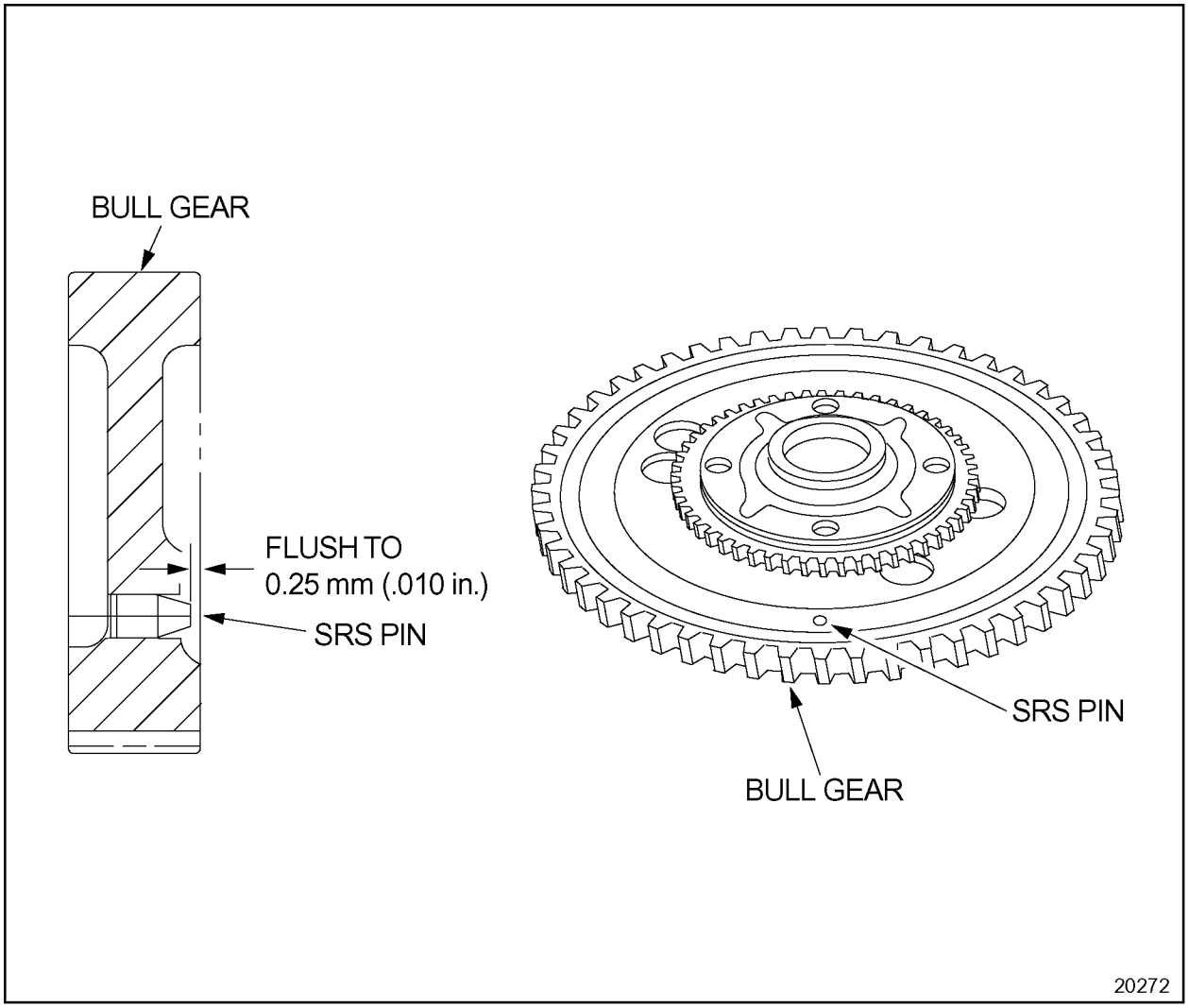

Figure 1-433 SRS Pin Location

(Rev. 2004) *All information subject to change without notice.*
6SE483 0401 Copyright © 2004 DETROIT DIESEL CORPORATION

1. Check the SRS pin for damage or looseness. If the SRS pin is damaged or dislodged, replace the pin as follows:

   [a] Press the SRS pin from the bull gear. Discard pin.

NOTICE:
Do NOT reuse or readjust a pin once it has been installed. Damage to pin will cause loss of engine performance.

   [b] Apply Loctite® 609 (PT 7260) to pin.

   [c] Press pin flush to 0.25 mm (0.010 in.) below bull gear surface.

   [d] If no damage is found, reuse the bull gear assembly.

2. Using straight edge and thickness gages, measure recess of SRS pin.

   [a] If pin is not flush to 0.25 mm (0.010 in.) below bull gear surface, replace the pin.

   [b] If the pin is to specifications 0.25 mm (0.010 in.), reuse the part.

 Copyright © 2004 DETROIT DIESEL CORPORATION

1.27.3 Installation of Bull Gear and Camshaft Idler Gear Assembly

Install bull gear assembly and camshaft assembly as follows:

1. Inspect the bull gear and camshaft idler gear access opening in the gear case and remove any foreign material. Be sure the lubrication oil holes are clear and free.
2. Install two Bull Gear Guide Studs, J 35785, to the cylinder block. See Figure 1-434.

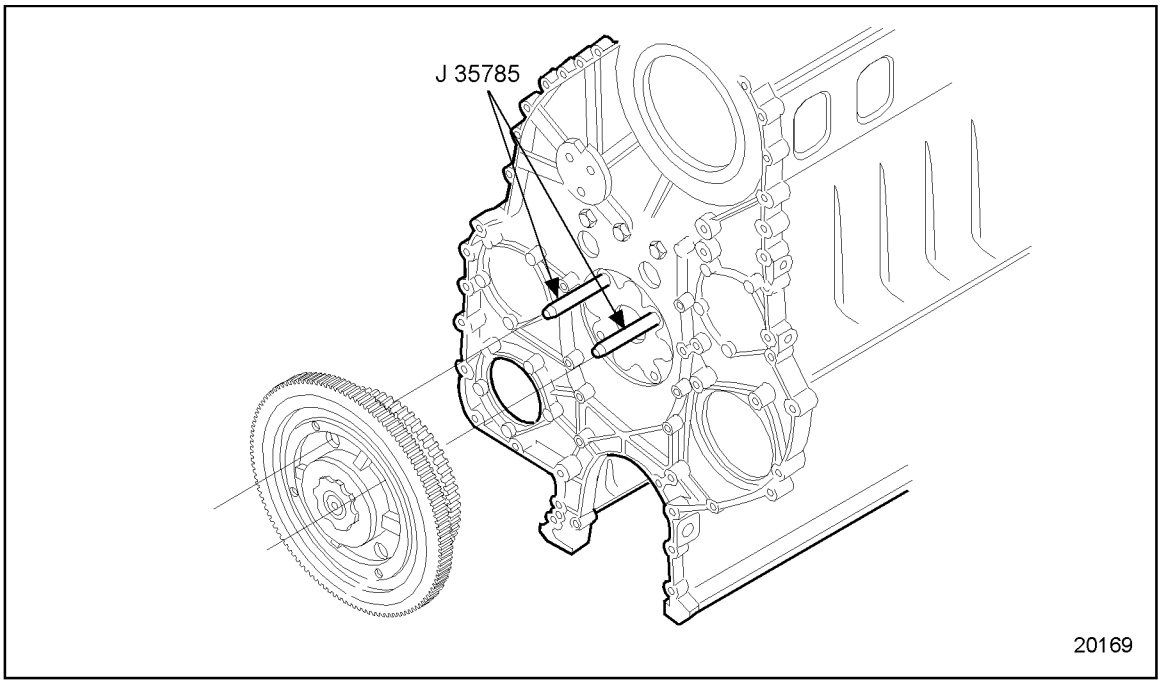

Figure 1-434 Bull Gear Guide Stud Installation

3. Install J 35994, to the oil seal contact area of the crankshaft.

NOTE:
The crankshaft seal surface will be protected using J 35994, when installing the bull gear and camshaft idler gear assembly to the cylinder block.

4. Install the bull gear and camshaft idler gear assembly to the guide studs in the cylinder block.

(Rev. 2004) *All information subject to change without notice.*
6SE483 0401 Copyright © 2004 DETROIT DIESEL CORPORATION

5. Bar the engine over until the timing mark on the crankshaft timing gear is at the 12 o'clock position. See Figure 1-435.

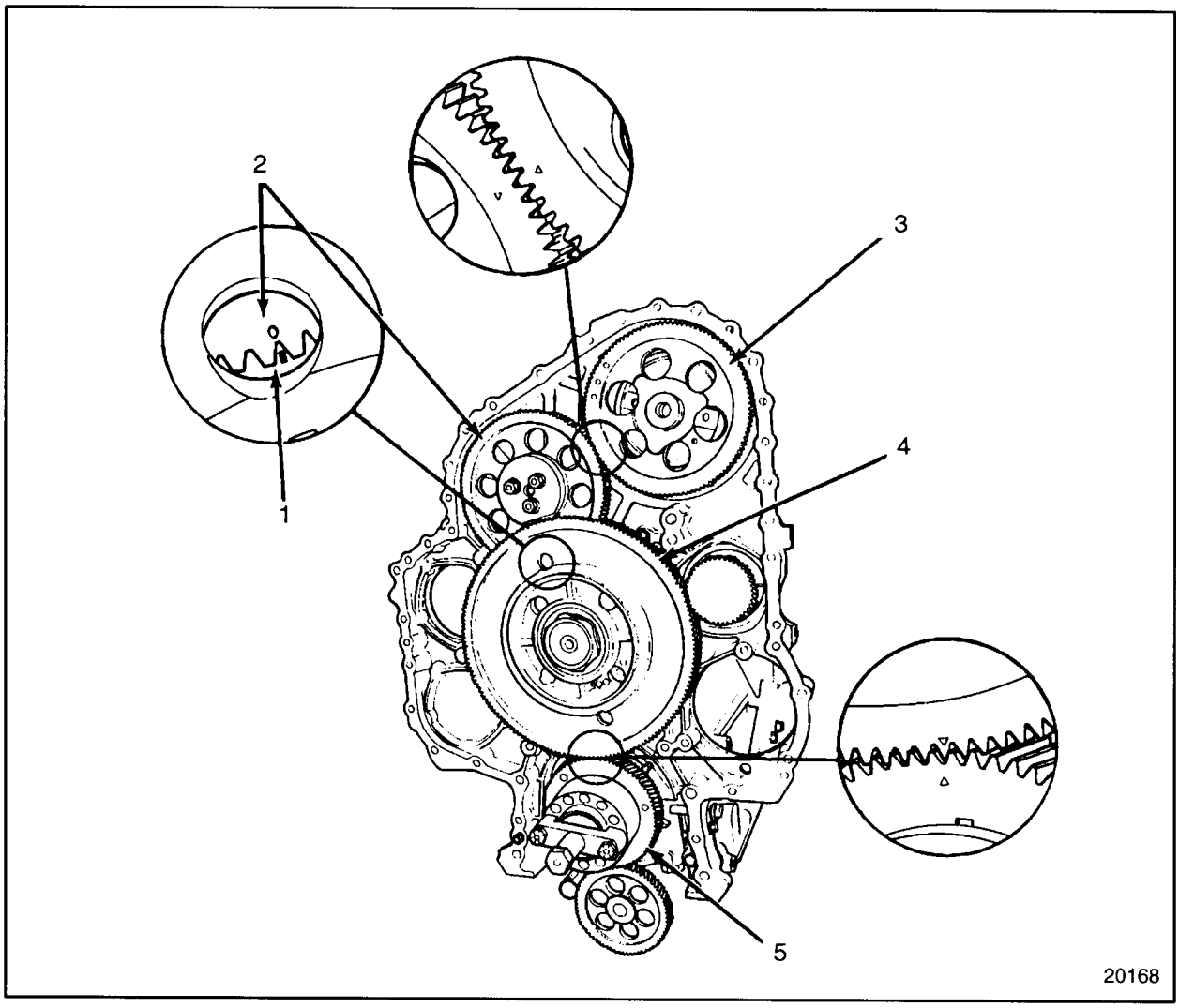

1. Idler Gear, Camshaft
2. Idler Gear, Adjustable
3. Drive Gear, Camshaft
4. Bull Gear
5. Timing Gear, Crankshaft

Figure 1-435 Engine Gear Train and Timing Marks

 Copyright © 2004 DETROIT DIESEL CORPORATION

6. Align the timing marks on the camshaft drive gear and the adjustable idler gear as shown. See Figure 1-435.
7. Slide the bull gear and camshaft idler gear assembly towards the engine, but do not engage any of the gears on the engine.
8. Looking through the access hole in the bull gear, align the timing marks on the adjustable idler gear and the camshaft idler gear as shown. See Figure 1-435.
9. Check the timing marks on the bull gear and crankshaft timing gear to ensure they will align when the bull bear assembly is seated in the cylinder block.

NOTE:
The injector and valve spring pressures will not allow easy rotation of the camshaft and adjustable idler gears. Therefore, it may be necessary to remove the rocker arm shaft assemblies to facilitate aligning all three sets of timing marks. Refer to section 1.3.2.

10. When all three sets of timing marks are aligned, slide the bull gear and camshaft idler gear towards the engine completely and seat it in the recess in the gear case and cylinder block.

NOTICE:
Use care when installing the bull gear and camshaft idler gear assembly to prevent damaging the crankshaft oil seal contact surface.

11. Working through the lightening holes in the bull gear, install two of the bull gear assembly mounting bolts through the hub and into the cylinder block. Tighten the bolts finger-tight.
12. Remove the two bull gear guide studs.
13. Install the remaining two bull gear assembly mounting bolts. Torque all four mounting bolts to 101-116 N·m (75-86 lb·ft) in a clockwise direction.
14. Check the timing marks on the gears to ensure the gear train is properly timed. See Figure 1-435.
15. Check the gear lash for all of the gears that mate with the bull gear and camshaft idler gear. Refer to section 1.22.
16. Install the gear case cover. Refer to section 1.10.3.
17. Check bull gear to accessory drive gear lash. Refer to section 1.22.2.1.
18. Refer to section 11.8 for verification of proper bull gear and camshaft idler gear assembly installation.

(Rev. 2004) *All information subject to change without notice.*
6SE483 0401 Copyright © 2004 DETROIT DIESEL CORPORATION

1.28 CRANKSHAFT TIMING GEAR AND TIMING WHEEL

The crankshaft timing gear is a helical gear that is indexed to the crankshaft by a key. It is pressed onto the end of the crankshaft. The inside diameter of the 12.7 liter engine crankshaft timing gear is slightly larger than the 11.1 liter engine gear. The current 12.7 liter engine gear can be identified by an "O" on the front face of the gear. See Figure 1-436.

NOTE:
The former 12.7 liter engine gear had a groove on the front face.

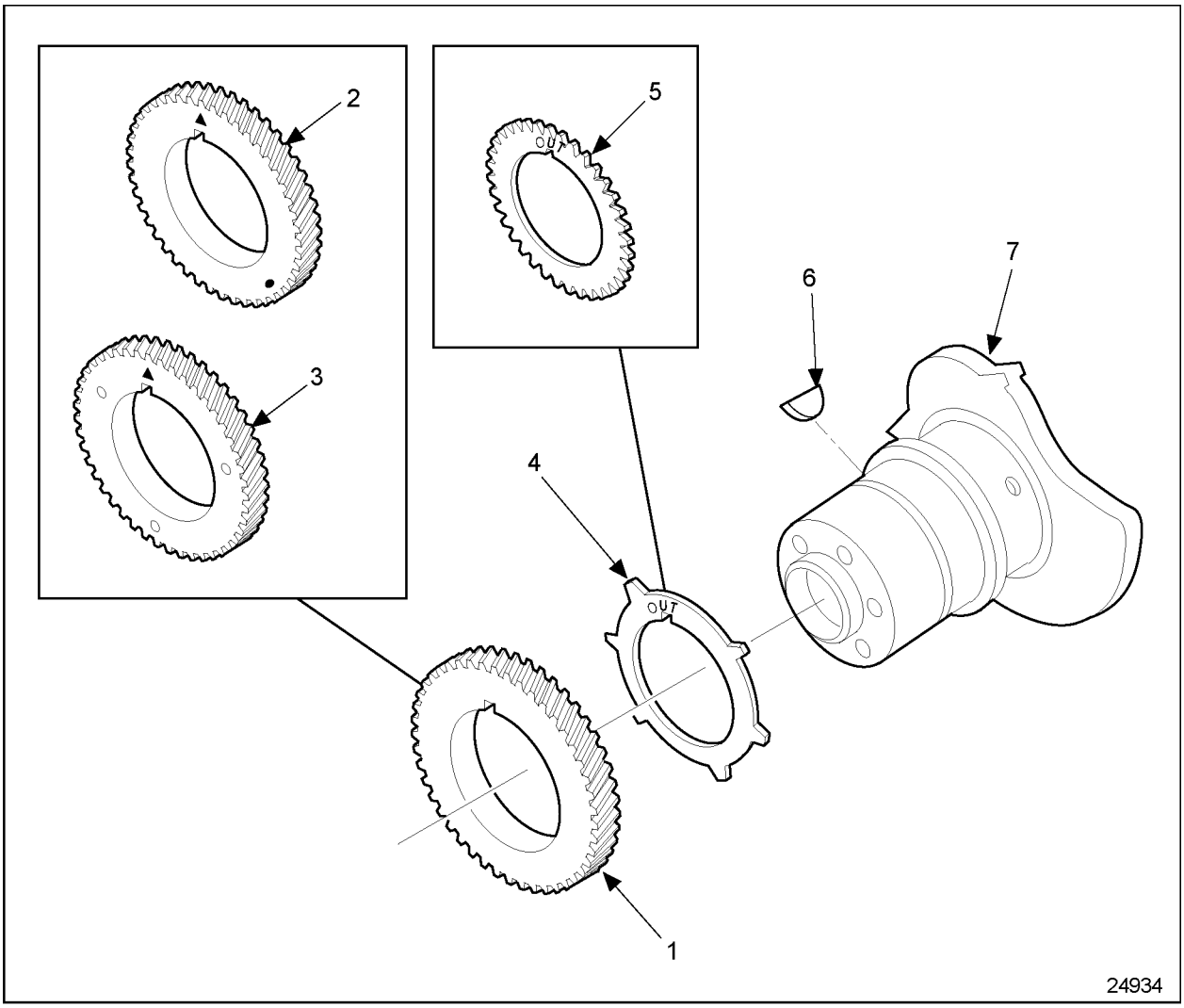

1. Timing Gear, Crankshaft
2. 12.7L Gear
3. 11.1L Gear
4. Timing Wheel, DDEC II
5. Timing Wheel, DDEC III
6. Woodruff Key
7. Crankshaft

Figure 1-436 Crankshaft Timing Gear and Related Parts

 Copyright © 2004 DETROIT DIESEL CORPORATION

The crankshaft timing gear directly drives the bull gear and oil pump drive gear. The bull gear drives the various accessories, and drives the camshaft through the idler gear. See Figure 1-437.

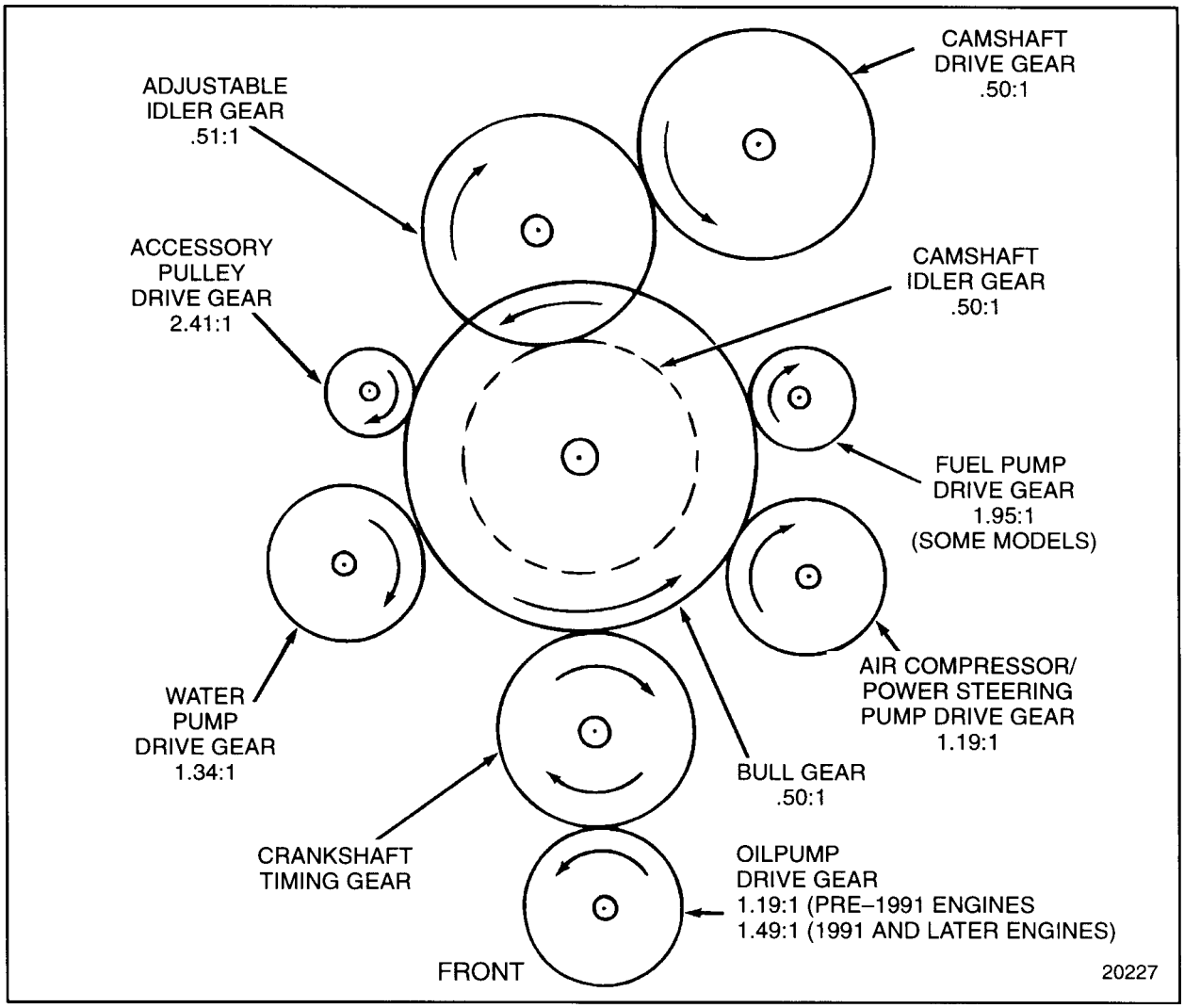

Figure 1-437 Engine Gear Train

(Rev. 2004) *All information subject to change without notice.*
6SE483 0401 Copyright © 2004 DETROIT DIESEL CORPORATION

A timing wheel is installed on the crankshaft directly behind the crankshaft timing gear. The timing wheel is indexed to the crankshaft by the same key as the crankshaft timing gear, and is retained to the crankshaft by the crankshaft timing gear. The timing wheel is marked with the word OUT on the outboard side, and should be installed with this mark facing you as you install the wheel. See Figure 1-438.

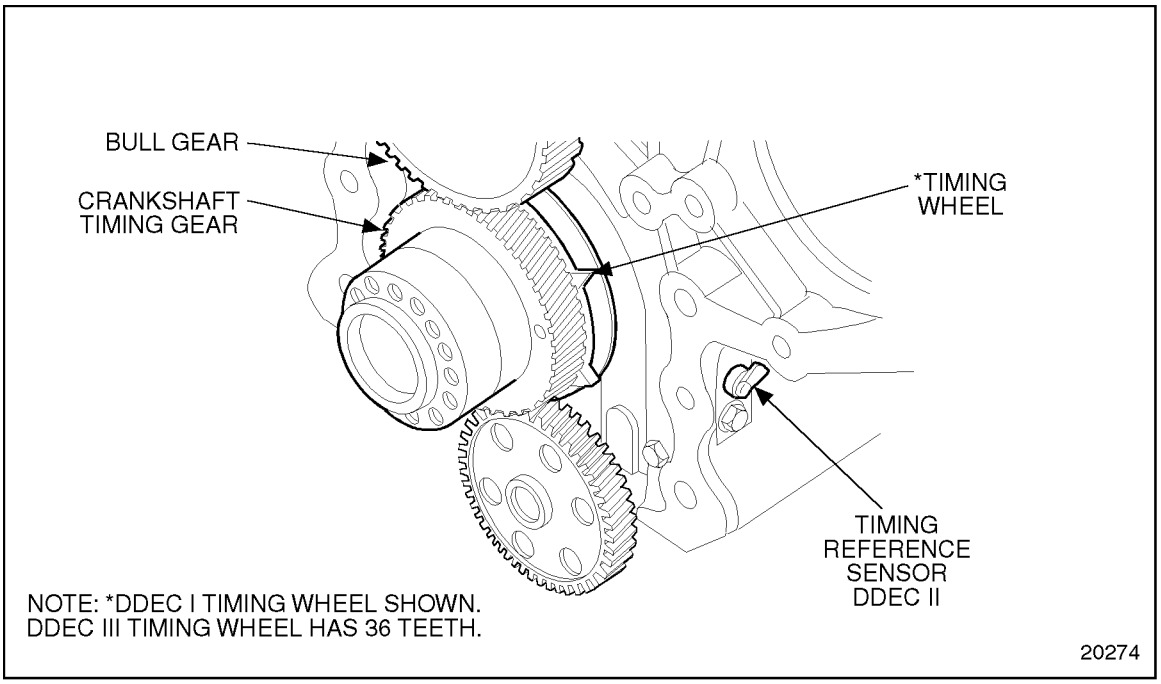

Figure 1-438 Crankshaft Timing Gear and Related Parts Location

The timing wheel induces a voltage signal in the Timing Reference Sensor (TRS), as the teeth of the pulse wheel passes by the TRS. This signal is sent to the Electronic Control Module (ECM) to determine injector firing.

Since the crankshaft and camshaft must be in time with each other, a series of timing marks are stamped or etched on the faces of the gears in the gear train. Refer to section 1.22.2.1, for gear train timing information. The balance shafts and crankshaft must also be in time with each other.

The crankshaft timing gear is lubricated by splash from the engine oil pan, and excess oil returning to the oil pan from the other gears.

1.28.1 Repair or Replacement of Crankshaft Timing Gear and Timing Wheel

To determine if repair or replacement of the crankshaft timing gear and timing wheel are necessary, perform the following procedure. See Figure 1-439.

 Copyright © 2004 DETROIT DIESEL CORPORATION

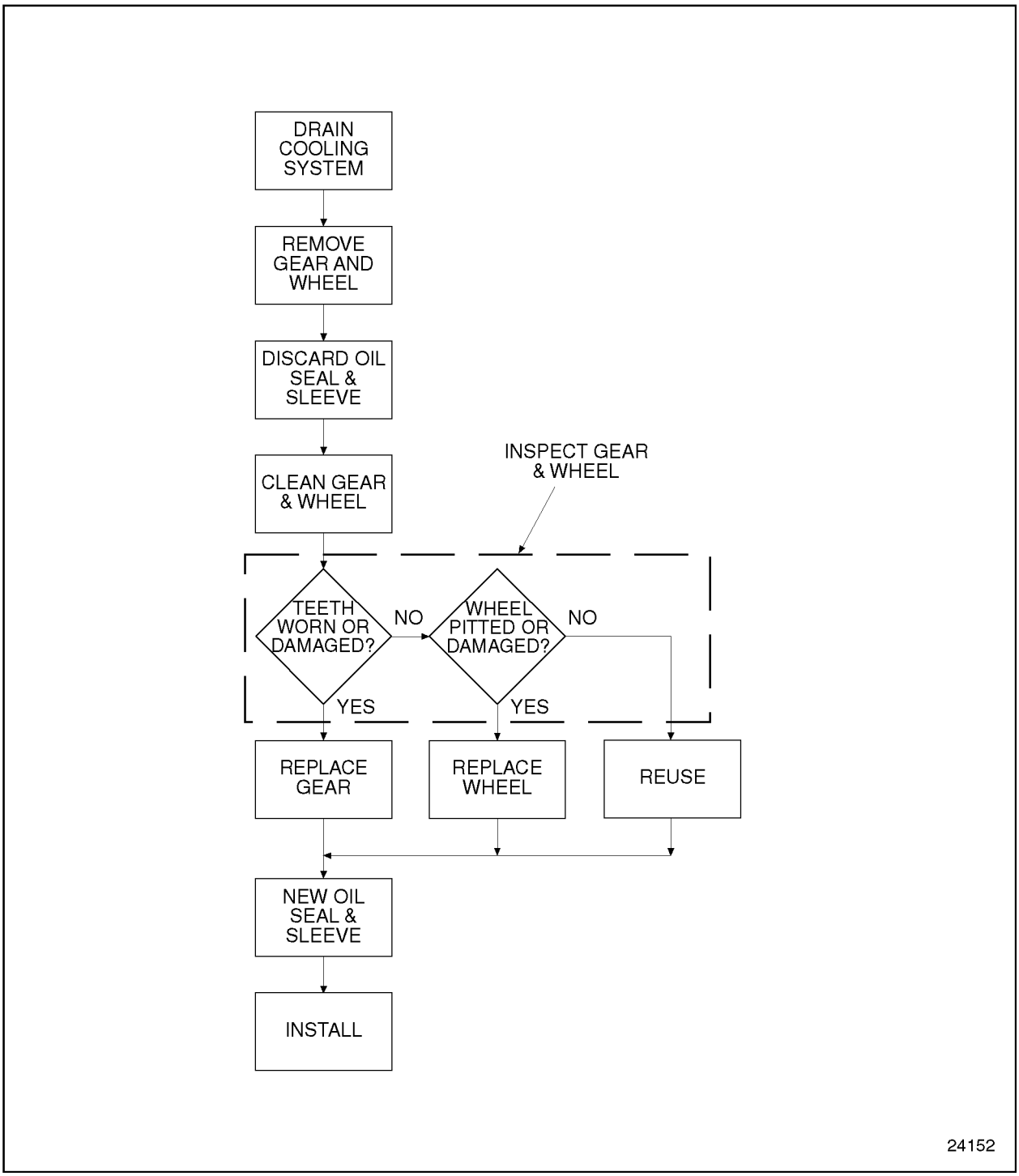

Figure 1-439 Flowchart for Repair or Replacement of Crankshaft Timing Gear and Timing Wheel

(Rev. 2004) *All information subject to change without notice.*
6SE483 0401 Copyright © 2004 DETROIT DIESEL CORPORATION

1.28.2 Removal of Crankshaft Timing Gear and Timing Wheel

Remove the gear and the timing wheel as follows:

1. Drain the cooling system. Refer to section 13.13.4.
2. Remove the radiator to engine coolant hoses. Refer to OEM guidelines.
3. Remove the timing reference sensor. Refer to section 2.33.2.
4. Remove components as necessary to gain access to the gear case cover.
5. Remove the gear case cover. Refer to section 1.10.2.
6. If an oversize crankshaft front oil seal sleeve is used, peen the outside diameter of the sleeve until it stretches sufficiently and slip the sleeve off of the crankshaft. Discard sleeve.
7. Remove the oil pump inlet and outlet tubes. Refer to section 3.2.2.
8. Remove the oil pump. Refer to section 3.2.2.

NOTICE:
Use care when removing the bull gear assembly. To prevent damaging the crankshaft oil seal contact surface, use Crankshaft Protector, J 35994 on end of crankshaft or oil leaks may result.

9. Remove the bull gear and camshaft idler gear assembly. Refer to section 1.27.2.

 Copyright © 2004 DETROIT DIESEL CORPORATION

10. Using two of the crankshaft pulley bolts, secureJ 35642-1 part of J 35642 to the end of the crankshaft. Torque the bolts to 190-203 N·m (140-150 lb·ft). See Figure 1-440.

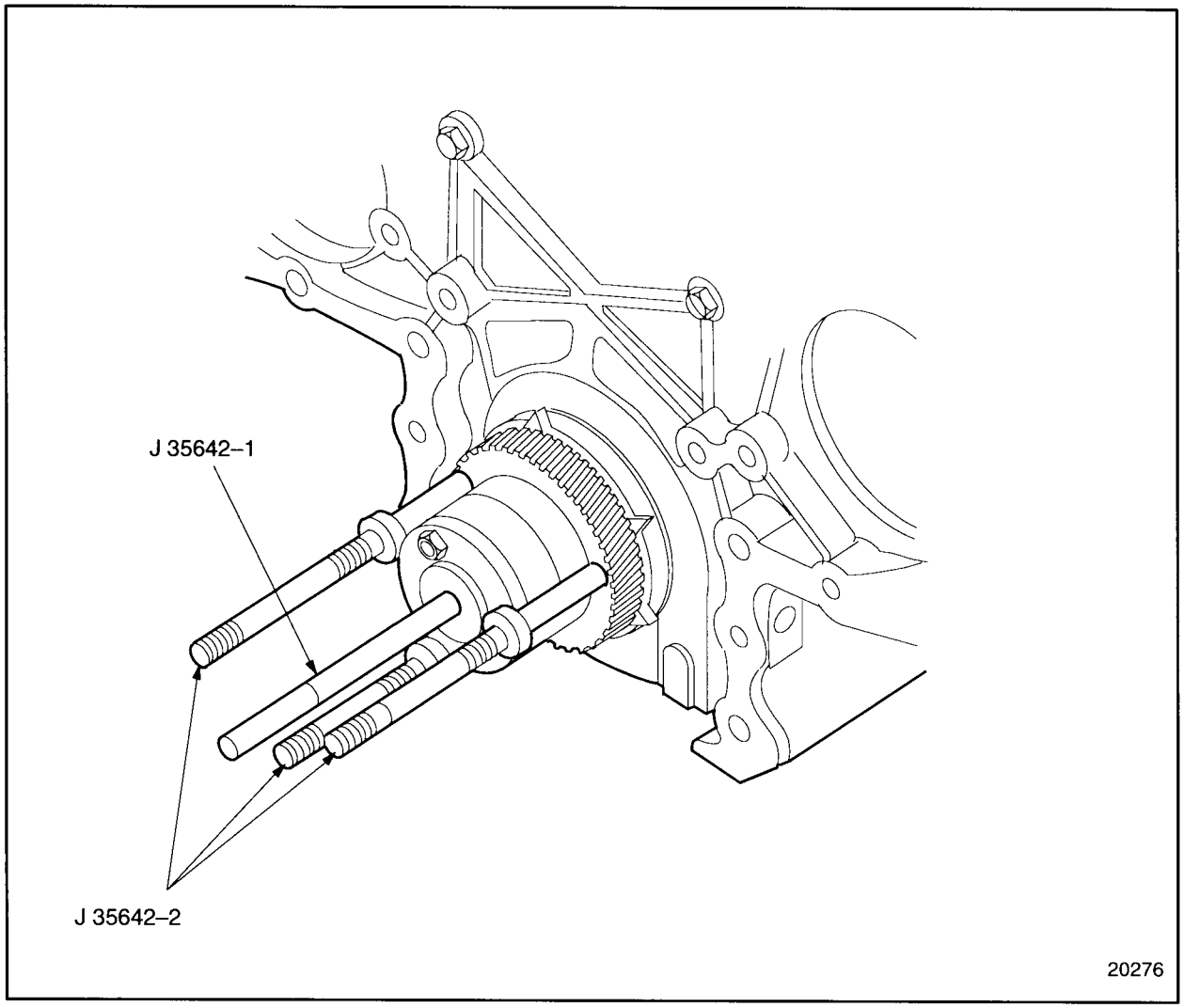

Figure 1-440 Installation of Crankshaft Timing Gear Removal Tools

NOTE:
The crankshaft removal values are shown with the crankshaft installed in the engine. The crankshaft timing gear may be removed with the crankshaft in or out of the engine.

(Rev. 2004) *All information subject to change without notice.*
6SE483 0401 Copyright © 2004 DETROIT DIESEL CORPORATION

11. Thread the three guide studs,J 35642-2 part of J 35642 into the three threaded holes in the crankshaft timing gear. finger-tighten the legs.
12. Slide the hydraulic ram, J 35951-175, over the center rod of, J 35642-1 part of J 35642 and all the way to the base. See Figure 1-441.

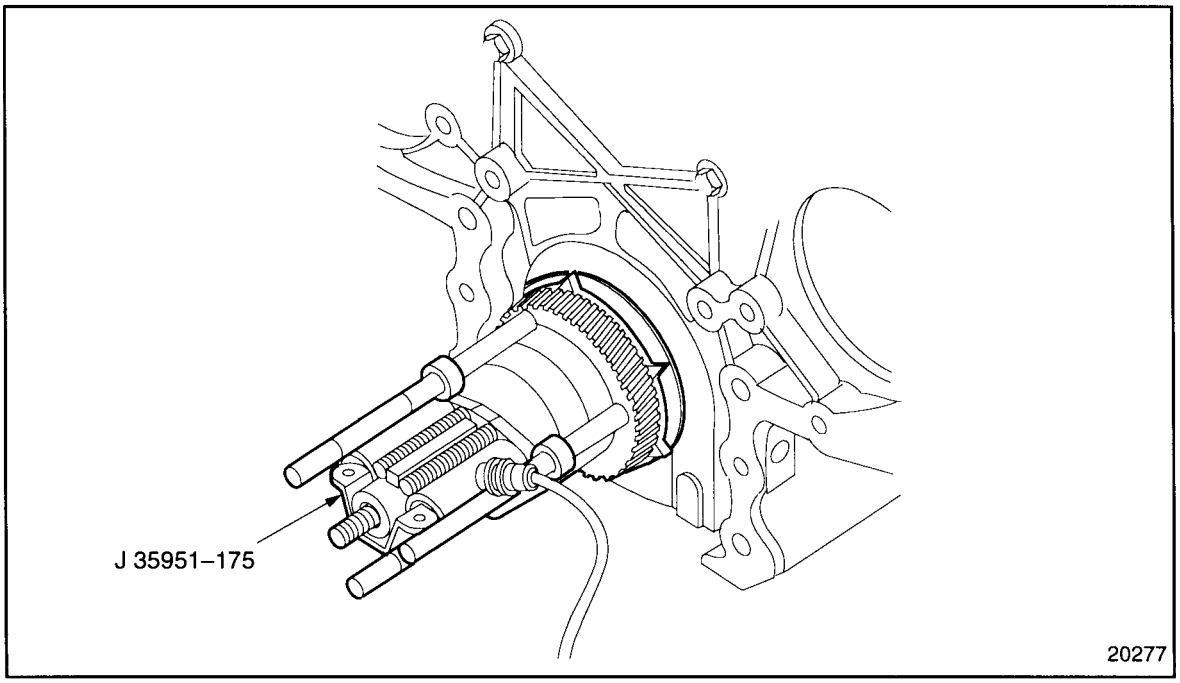

Figure 1-441 Hydraulic Ram Installation

 Copyright © 2004 DETROIT DIESEL CORPORATION

13. Install J 35642-4 part of J 35642, to the three guide studs, J 35642-2 part of J 35642. See Figure 1-442.

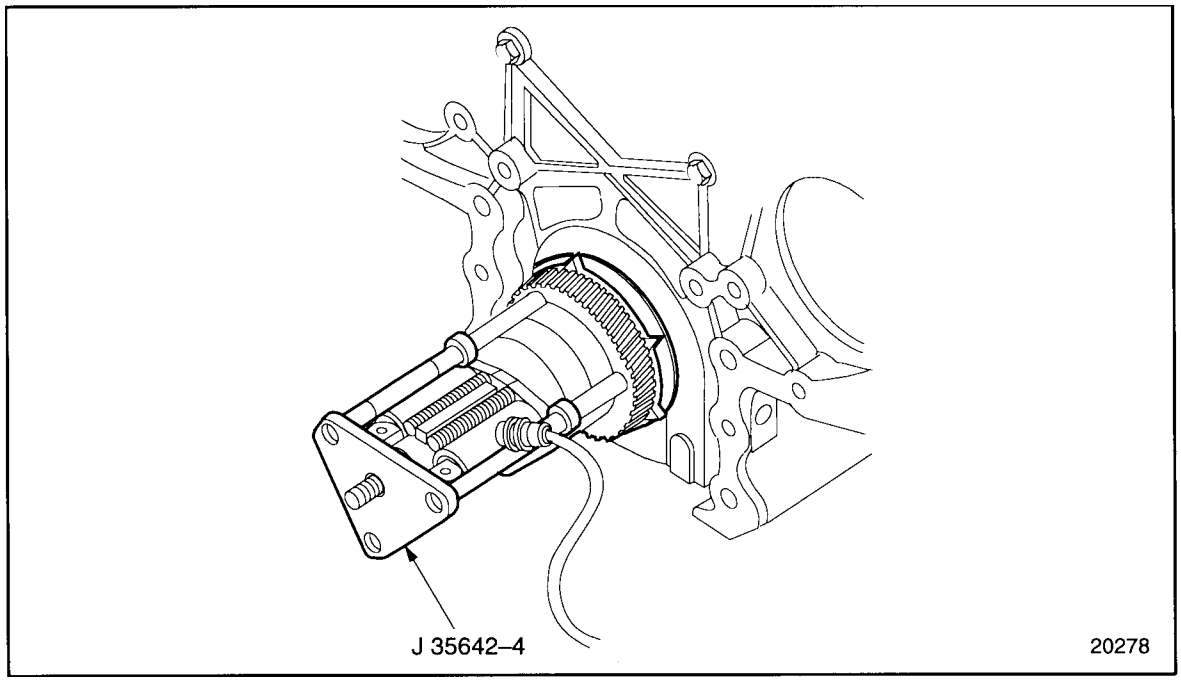

Figure 1-442 Pressure Plate Installation

(Rev. 2004) *All information subject to change without notice.*
6SE483 0401 Copyright © 2004 DETROIT DIESEL CORPORATION

14. Install the three retaining nuts to the legs. Tighten the nuts to the pressure plate. Finger-tighten the nuts. See Figure 1-443.

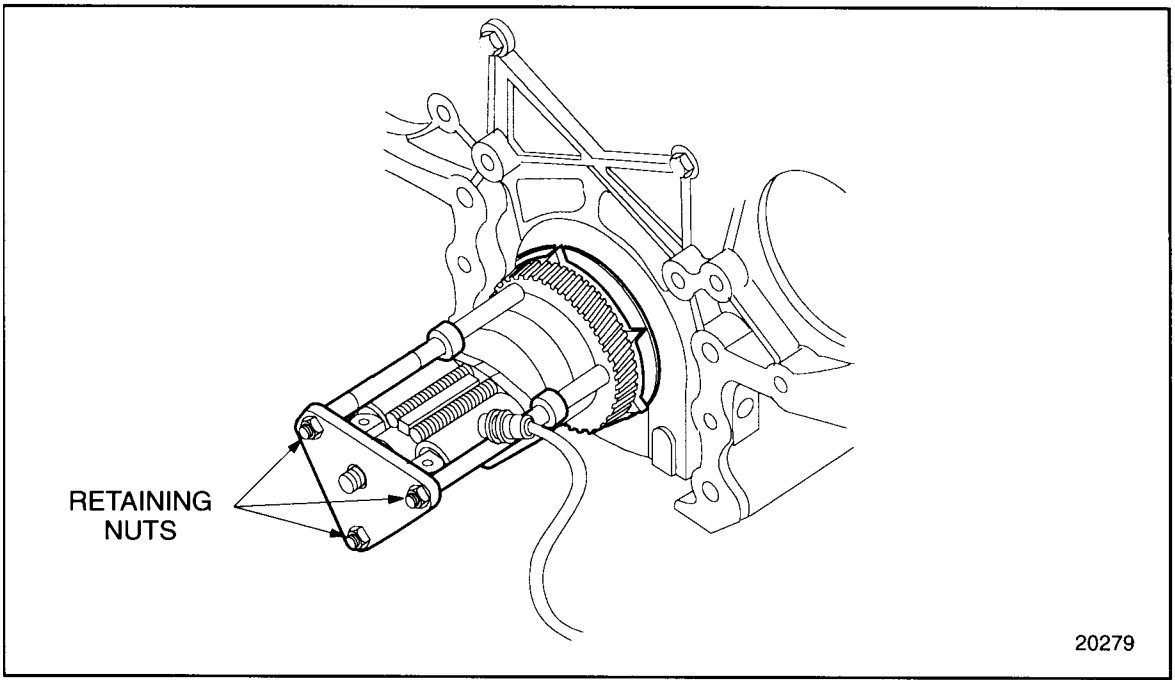

Figure 1-443 Retaining Nuts Installation

 Copyright © 2004 DETROIT DIESEL CORPORATION

15. Close the valve on J 35951-175. Pump the lever to build pressure and remove the crankshaft timing gear. See Figure 1-444.

NOTE:
Considerable pressure is required to remove the crankshaft timing gear. Due to manufacturer's tolerances, it may take as much as 80 kN (9 tons) of force to remove the crankshaft timing gear.

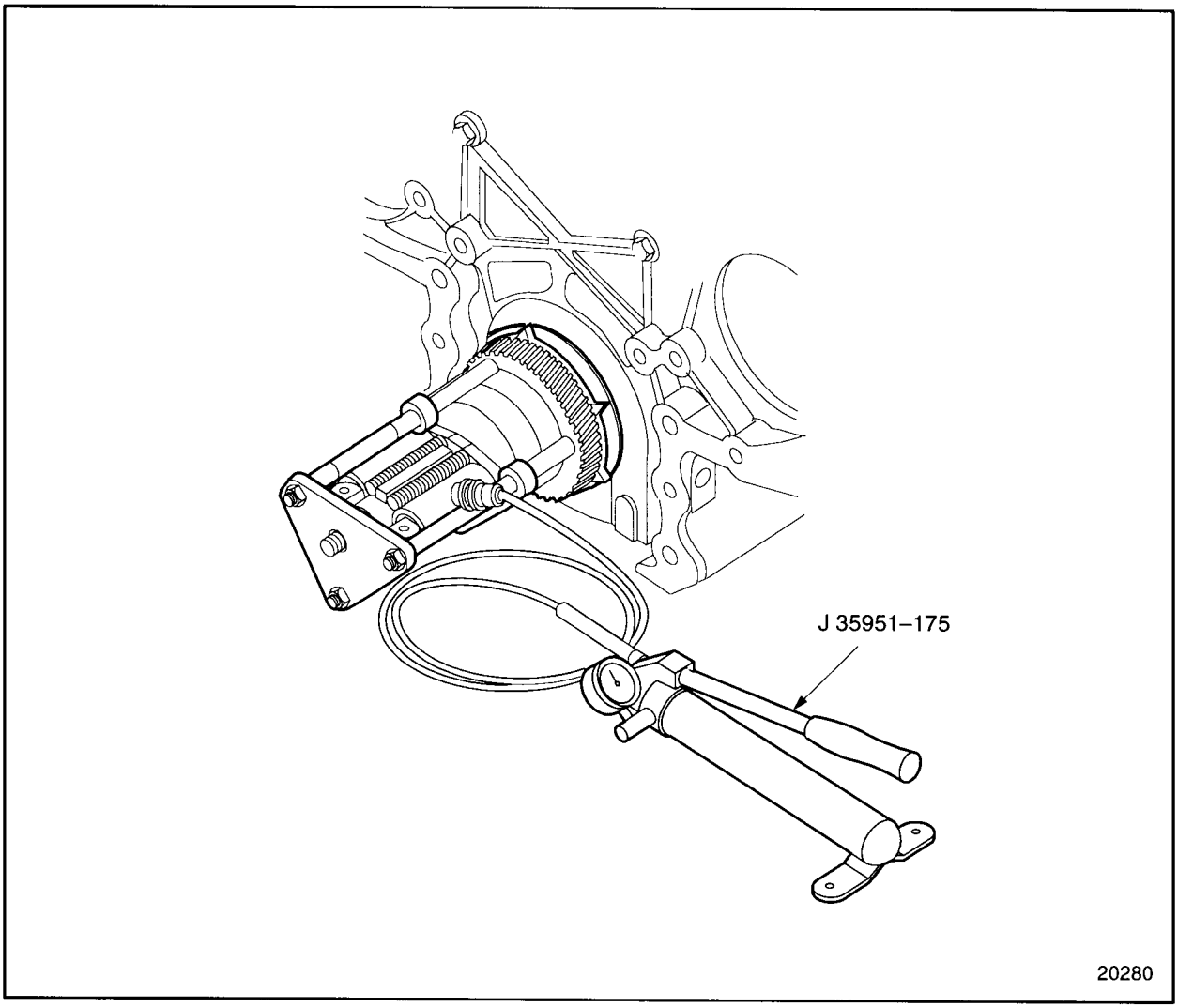

Figure 1-444 Crankshaft Timing Gear Removal

(Rev. 2004) *All information subject to change without notice.*
6SE483 0401 Copyright © 2004 DETROIT DIESEL CORPORATION

16. Remove the tools from the engine and timing gear as follows:
    [a] Open the valve on J 35951-175, to relieve the pressure. See Figure 1-444.
    [b] Loosen and remove the three retaining nuts on, J 35642-2 part of J 35642 against the pressure plate. See Figure 1-441.
    [c] Remove J 35642-2 part of J 35642.
    [d] Remove J 35951-175. See Figure 1-442.
    [e] Loosen and remove the three guide studs, J 35642-2 part of J 35642.
    [f] Loosen and remove the two crankshaft pulley bolts and remove the Base Post, J 35642-1 part of J 35642, part of Tool Kit J 35642.

NOTICE:
Care should be exercised when removing the timing wheel. Do NOT use sharp tools to pry on the timing wheel. Damage to the crankshaft seal contact surface may cause oil leaks.

17. Slide the timing wheel off the end of the crankshaft.

NOTE:
The timing wheel is a slip fit to the crankshaft, and no special tools are required for removal. A three-jaw adjustable puller, however, may be necessary.

 Copyright © 2004 DETROIT DIESEL CORPORATION

1.28.2.1 Inspection of Crankshaft Timing Gear and Timing Wheel

Inspect the crankshaft timing gear and timing wheel as follows:

1. Clean the crankshaft timing gear and timing wheel with clean fuel oil.

CAUTION:

To avoid injury from flying debris when using compressed air, wear adequate eye protection (face shield or safety goggles) and do not exceed 40 psi (276 kPa) air pressure.

2. Dry all parts with compressed air.
3. Visually examine the gear teeth of the crankshaft timing gear for evidence of scoring, pitting, or excess wear.

NOTE:
The 11.2 and 12.7 liter crankshaft gears have different inside diameters. The 12.7 L crank gear can be identified by a groove on the outer face of the gear. These gears cannot be interchanged.

NOTE:
If gear teeth are damaged or severely worn, also check the other gears in the gear train. Refer to section 1.22.2.

[a] If gear teeth are damaged or worn, install a new gear.

[b] If the gear teeth are not damaged, reuse the part.

4. Visually examine the timing wheel for evidence of pitting and the gear teeth for bending or damage.

[a] If wheel is pitted or gear teeth damaged, replace timing wheel.

[b] If the wheel is not damaged, reuse the part.

(Rev. 2004) *All information subject to change without notice.*
6SE483 0401 Copyright © 2004 DETROIT DIESEL CORPORATION

1.28.3 Installation of Crankshaft Timing Gear and Timing Wheel

Install the crankshaft timing gear and timing wheel as follows:

1. Install J 35642-1 part of J 35642 to the end of the crankshaft, using two crankshaft pulley retaining bolts. Torque the bolts to 190 - 203 N·m (140 - 150 lb·ft). See Figure 1-445.

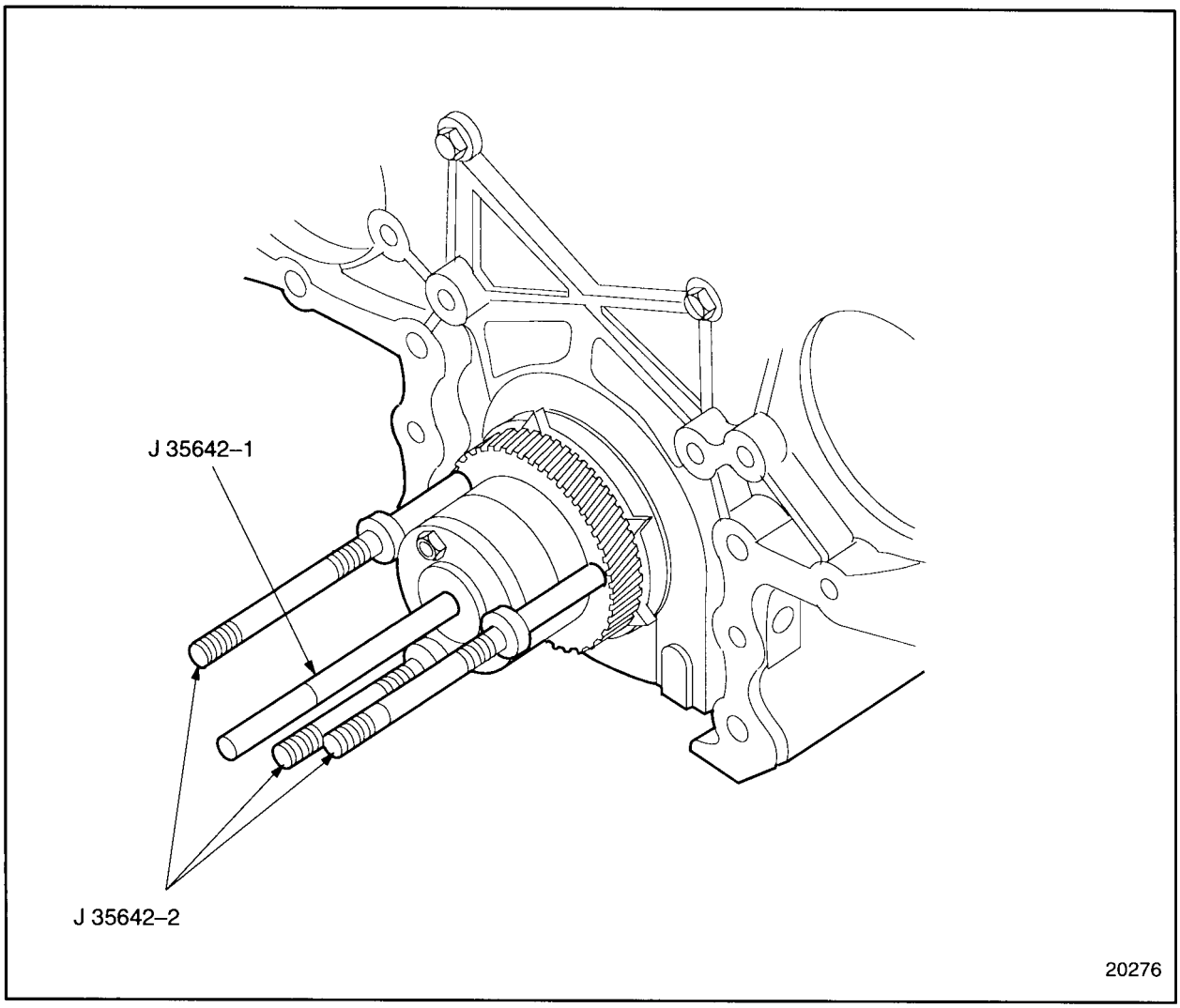

Figure 1-445 Installation of Crankshaft Timing Gear and Timing Wheel Installation Tools

 Copyright © 2004 DETROIT DIESEL CORPORATION

2. If removed, install the key to the keyway. Tap the key with a plastic mallet or brass hammer to seat. See Figure 1-446.

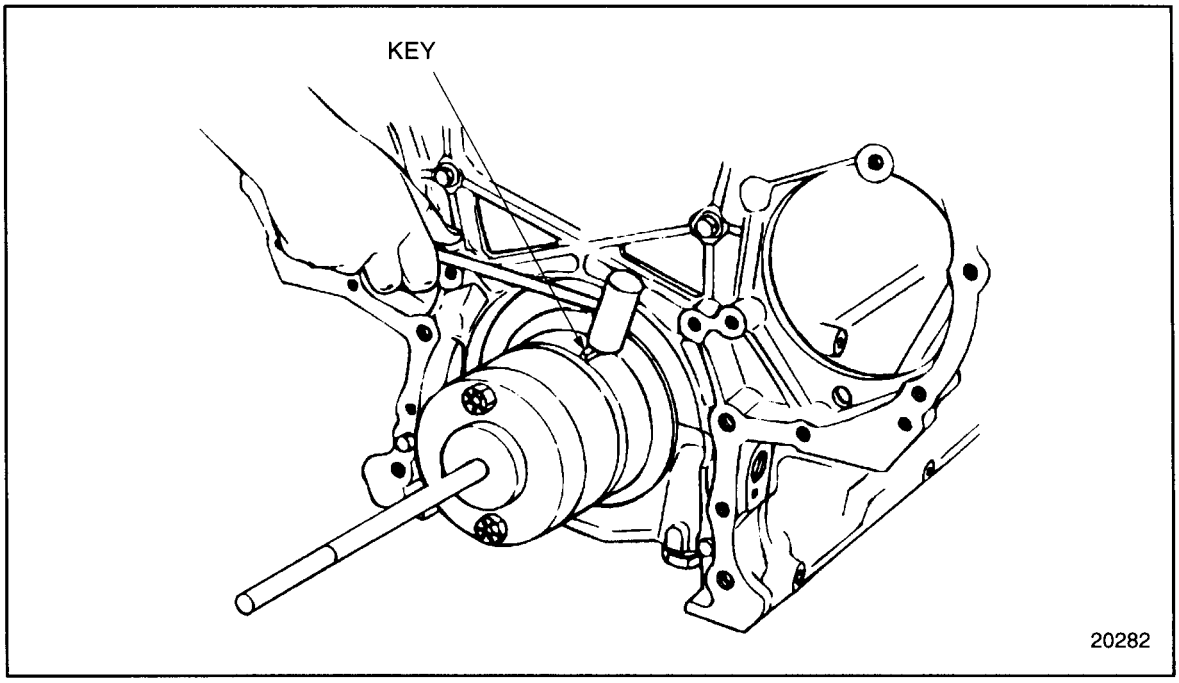

Figure 1-446 Key-to-Keyway Installation

(Rev. 2004) *All information subject to change without notice.*
6SE483 0401 Copyright © 2004 DETROIT DIESEL CORPORATION

3. Index the keyway of the timing wheel with the key in the crankshaft. Slide the timing wheel onto the crankshaft, with the word OUT on the timing wheel facing you, as far as it will go without forcing it. See Figure 1-447.

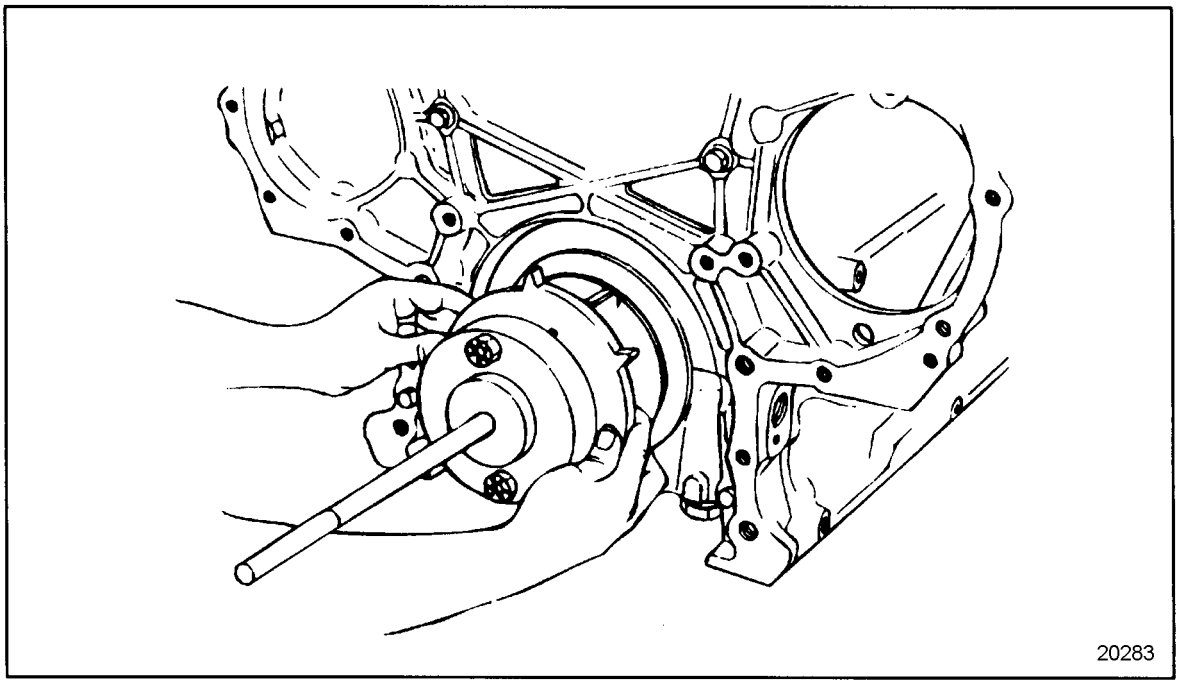

Figure 1-447 Timing Wheel Installation

4. Coat the bore of the crankshaft timing gear with a film of Lubriplate.

 Copyright © 2004 DETROIT DIESEL CORPORATION

5. Index the keyway of the crankshaft timing gear with the Woodruff key in the crankshaft. Tap the gear with a plastic hammer or fiber mallet, to ensure that the key is started in the keyway. See Figure 1-448.

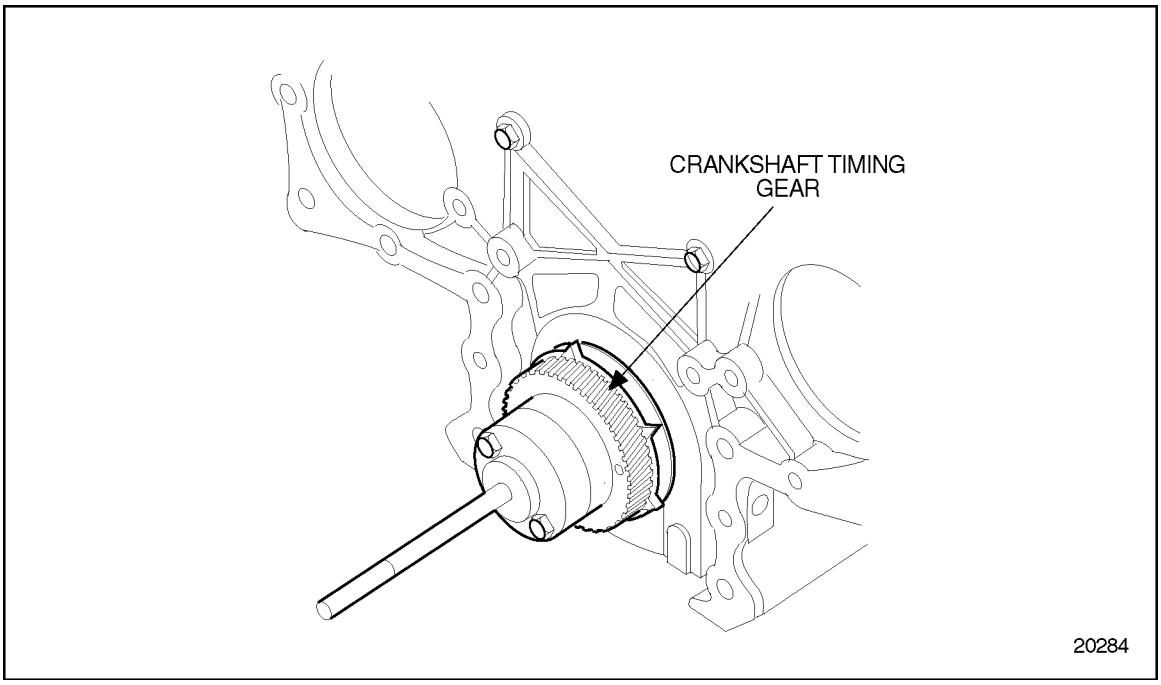

Figure 1-448 Crankshaft Timing Gear Indexing

(Rev. 2004) *All information subject to change without notice.*
6SE483 0401 Copyright © 2004 DETROIT DIESEL CORPORATION

6. Install the three guide studs, J 35642-2 part of J 35642 to the threaded holes in the crankshaft timing gear. Tighten the three legs, but do not torque. See Figure 1-449.

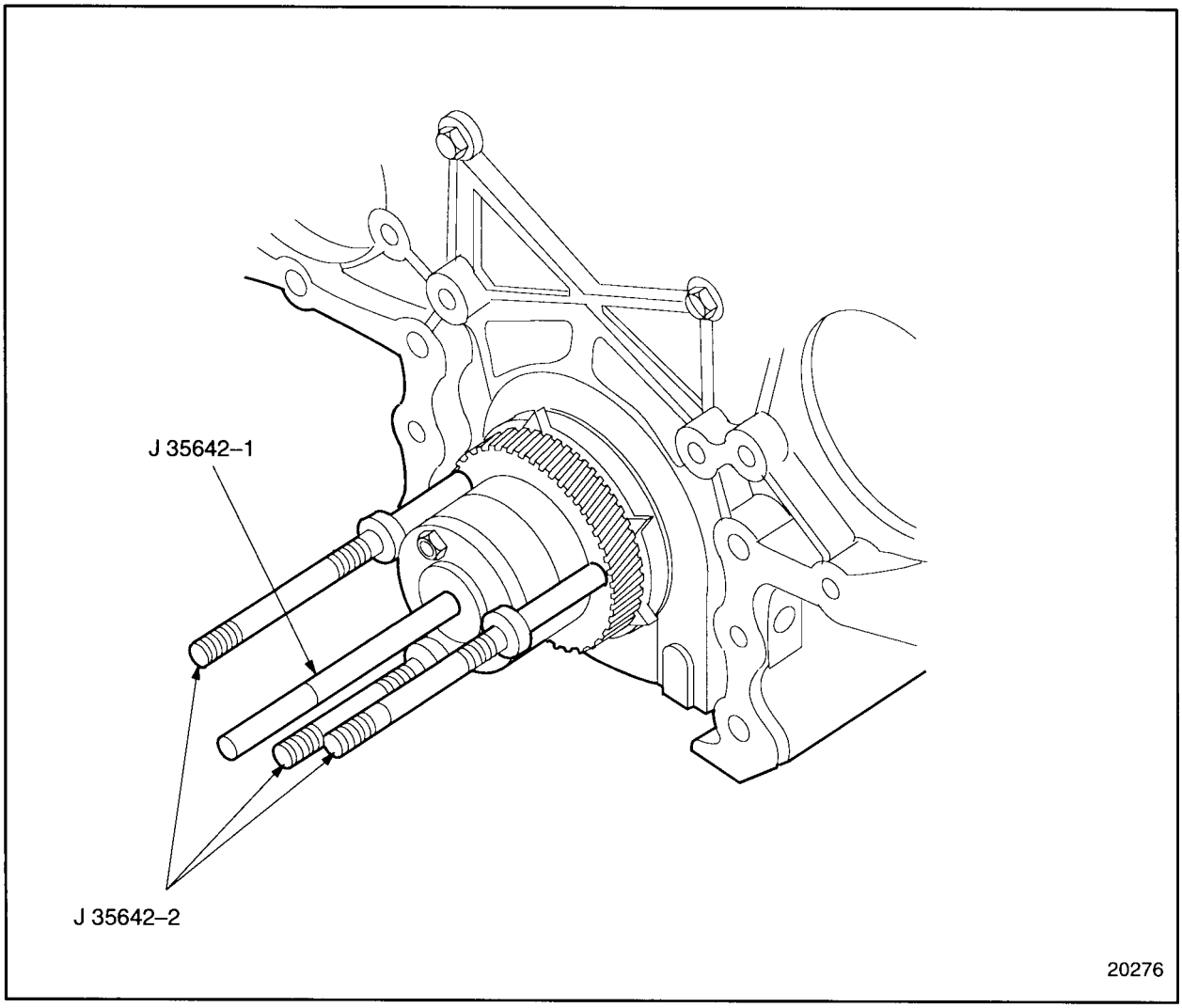

Figure 1-449 Puller and Leg Installation

 Copyright © 2004 DETROIT DIESEL CORPORATION

7. Install J 35642-4 part of J 35642 to the three pulley legs. Seat the pressure plate against the flanges on the puller legs. See Figure 1-450.

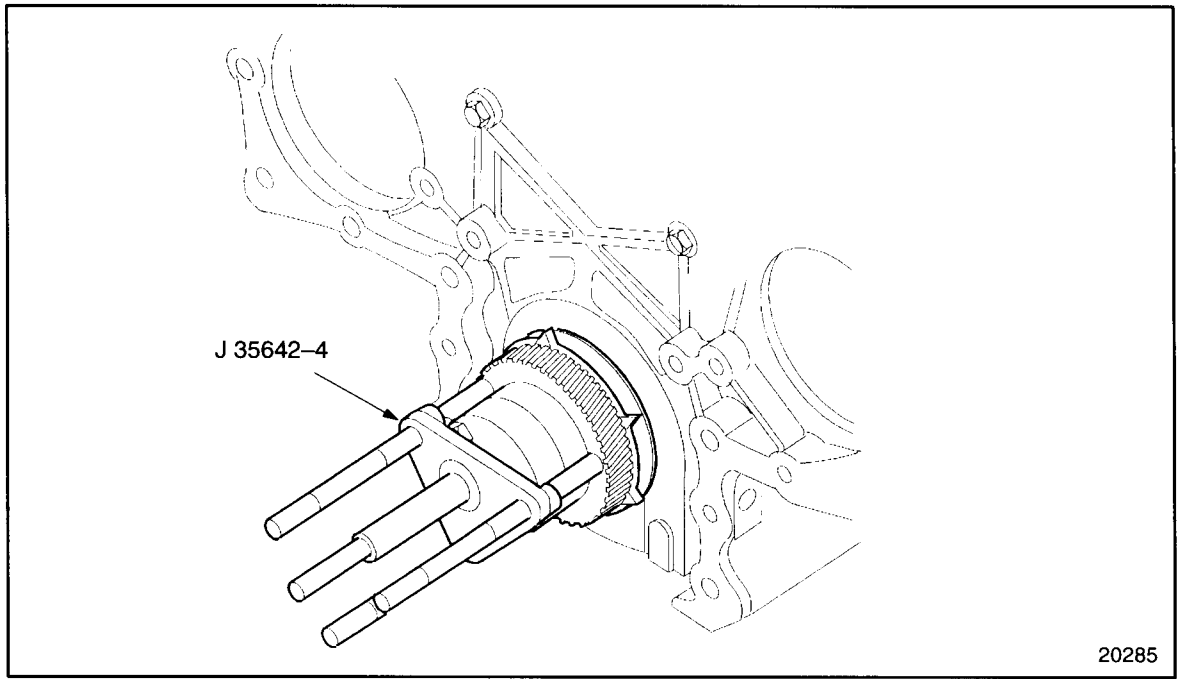

Figure 1-450 Pressure Plate Installation

(Rev. 2004) *All information subject to change without notice.*
6SE483 0401 Copyright © 2004 DETROIT DIESEL CORPORATION

8. Install the three retaining nuts to the puller legs. Thread the nuts past the first set of threads on the legs. Slide the nuts past the unthreaded portion of the shafts, and engage the second set of threads. Tighten but do not torque the retaining nuts. See Figure 1-451.

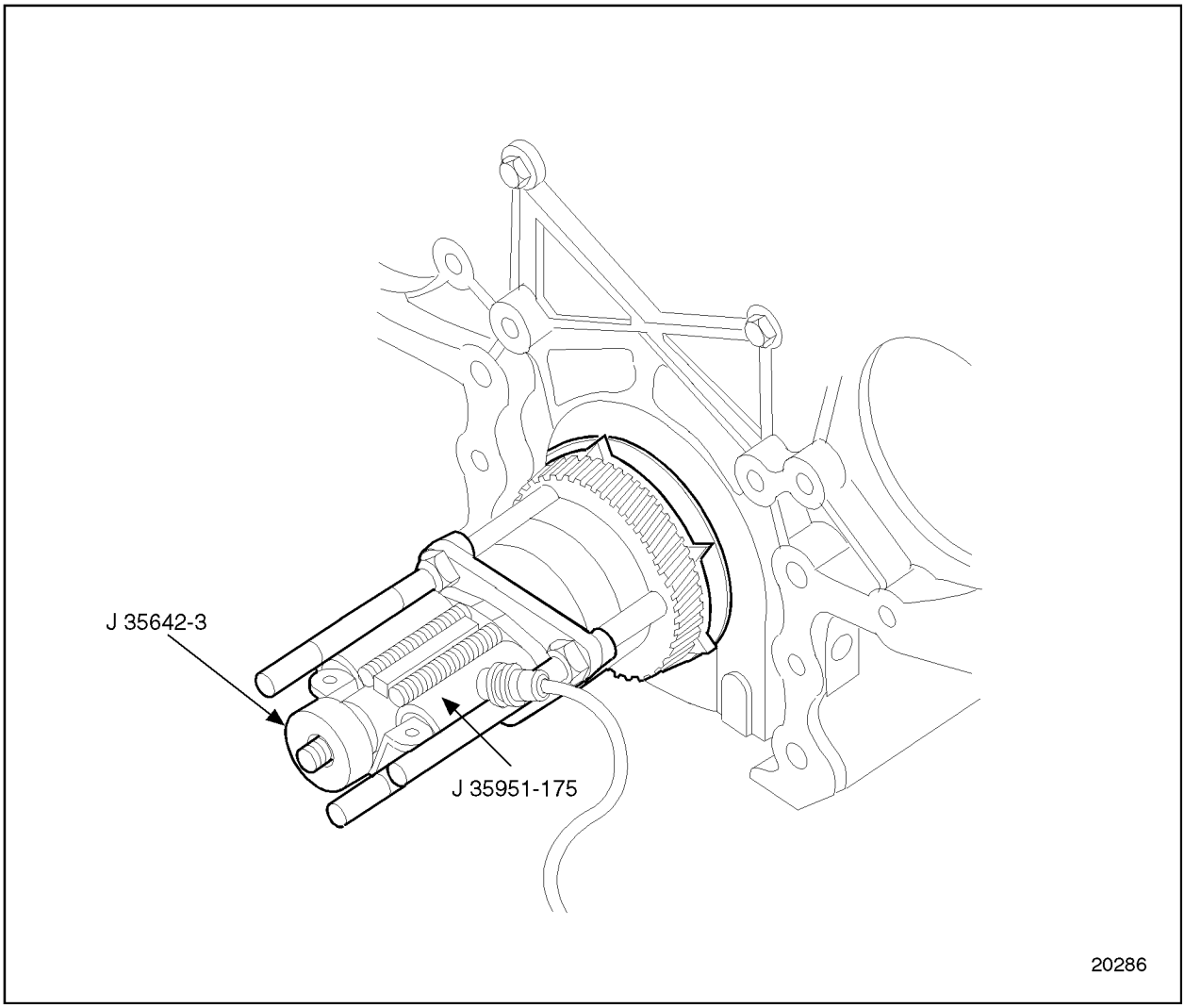

Figure 1-451 Crankshaft Timing Gear Installation Tools

9. InstallJ 35951-175 to the base post rod. See Figure 1-451.
10. Install J 35642-3 part of J 35642 to the end of the base post threaded rod. Tighten the stop nut.

 Copyright © 2004 DETROIT DIESEL CORPORATION

11. Close the valve on J 35951-175. Work the pump handle to supply hydraulic pressure to the ram. Make sure that the slot in the crankshaft timing gear indexes with the key in the crank. Pump until the crankshaft timing gear is seated firmly against the timing wheel and the timing wheel is seated firmly against the crankshaft flange. See Figure 1-452.

NOTE:
A minimum force of 30 kN (3.37 tons) must be obtained when pressing the gear on the crankshaft.

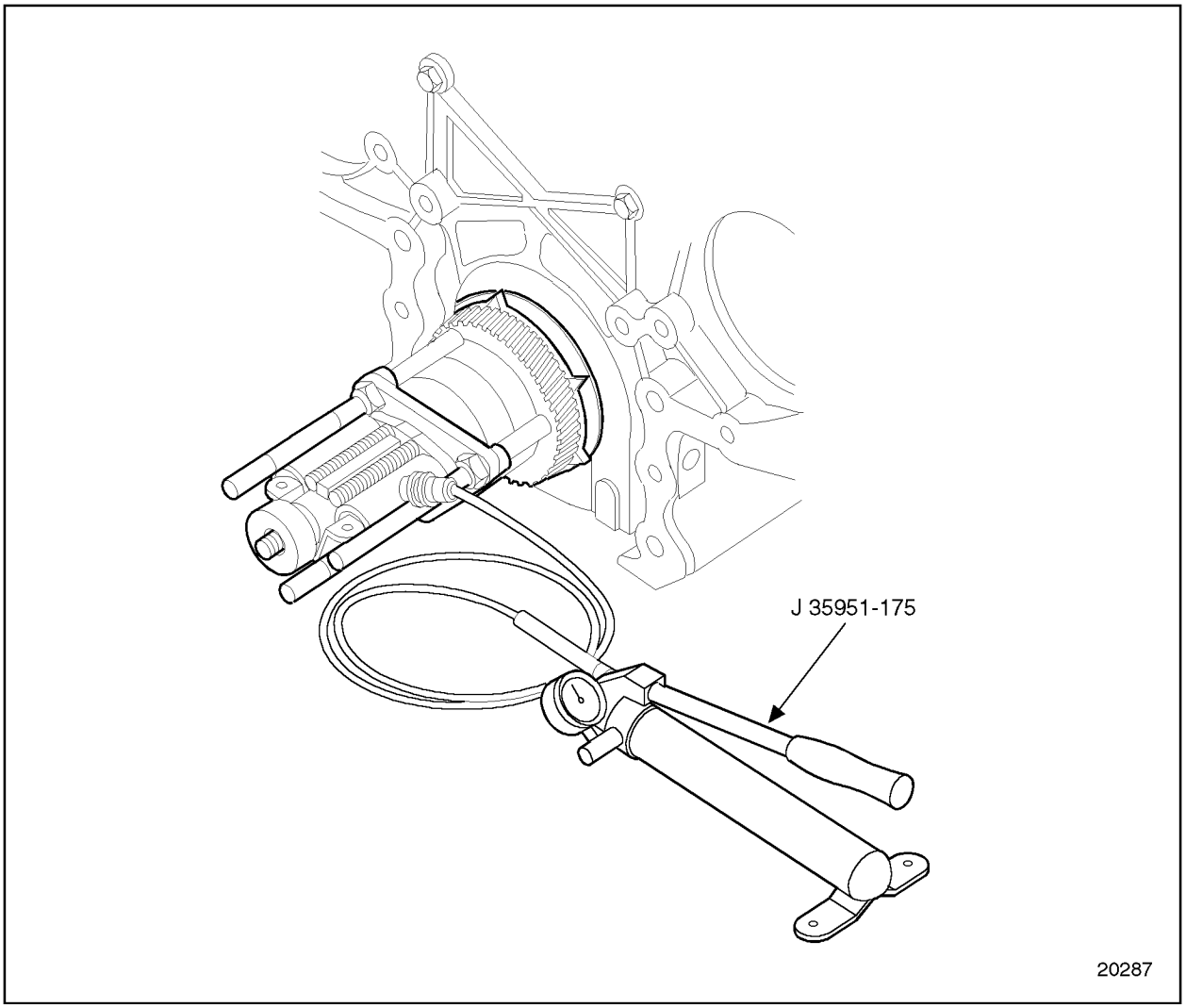

Figure 1-452 Crankshaft Timing Gear Installation

(Rev. 2004) *All information subject to change without notice.*
6SE483 0401 Copyright © 2004 DETROIT DIESEL CORPORATION

12. Remove the special tools as follows:
    [a] Open the valve on the hydraulic pump.
    [b] Remove J 35642-3 part of J 35642 from the end of the base post threaded rod.
    [c] Remove the hydraulic ram from the base post rod.
    [d] Remove the three retaining nuts from the puller legs of J 35642-2 part of J 35642.
    [e] Remove J 35642-4 part of J 35642 from the three pulley legs.
    [f] Remove the three legs of J 35642-2 part of J 35642 from the threaded holes in the crankshaft timing gear.
    [g] Remove J 35642-1 part of J 35642 and two crankshaft pulley retaining bolts from the end of the crankshaft.
13. Install the bull gear and camshaft idler gear assembly to the gear case. Refer to section 1.27.3.

NOTE:
Be sure to time the gears as instructed.

14. Install the lubricating oil pump, inlet and outlet pipes. Refer to section 3.2.6.
15. Measure the gear lash between the crankshaft timing gear and oil pump drive gear. Refer to section 1.22.2.1.
16. Measure the lash between the crankshaft timing gear and the bull gear. Refer to section 1.22.2.1.
17. Install the gear case cover. Refer to section 1.10.3.
18. Install a new crankshaft seal and sleeve. Refer to section 1.8.7.
19. Install the timing reference sensor (TRS). Refer to section 2.33.3.
20. Install any components that were removed for access to the gear case cover.
21. Refer to section 11.3 for verification of proper crankshaft timing gear and timing wheel installation.

 Copyright © 2004 DETROIT DIESEL CORPORATION

1.29 ACCESSORY DRIVE

The accessory drive assembly is mounted to the front of the gear case cover and utilizes a two-groove pulley to drive the alternator. See Figure 1-453, and see Figure 1-454.

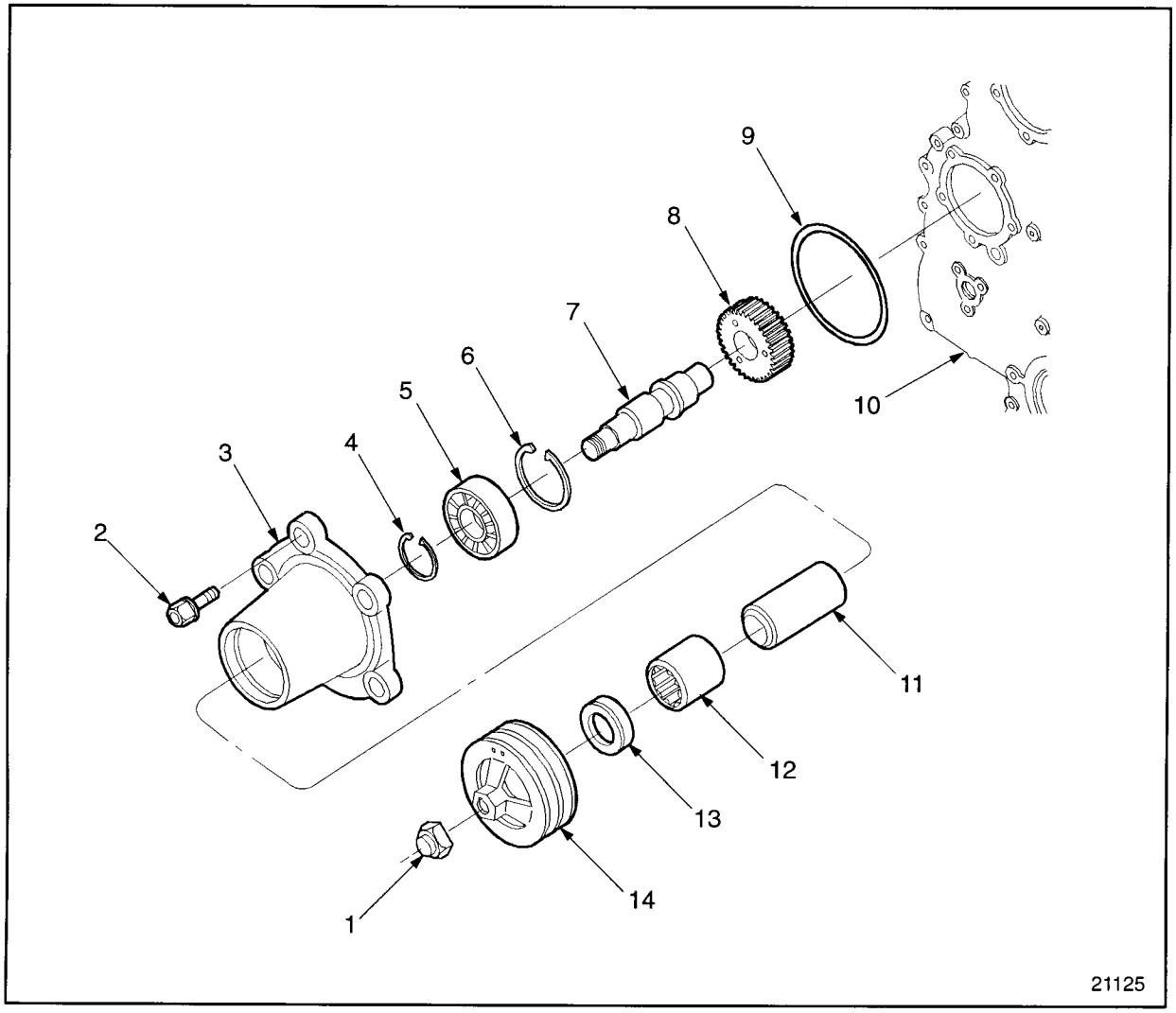

1. Locknut
2. Mounting Bolts (5)
3. Drive Housing
4. Snap Ring (Small)
5. Ball Bearing
6. Snap Ring (Large)
7. Drive Shaft
8. Drive Gear
9. O-ring
10. Gear Case Cover
11. Bearing Inner Race
12. Needle Bearing
13. Oil Seal
14. Pulley

Figure 1-453 Accessory Drive Assembly Related Parts (Former Design)

(Rev. 2004) *All information subject to change without notice.*
6SE483 0401 Copyright © 2004 DETROIT DIESEL CORPORATION

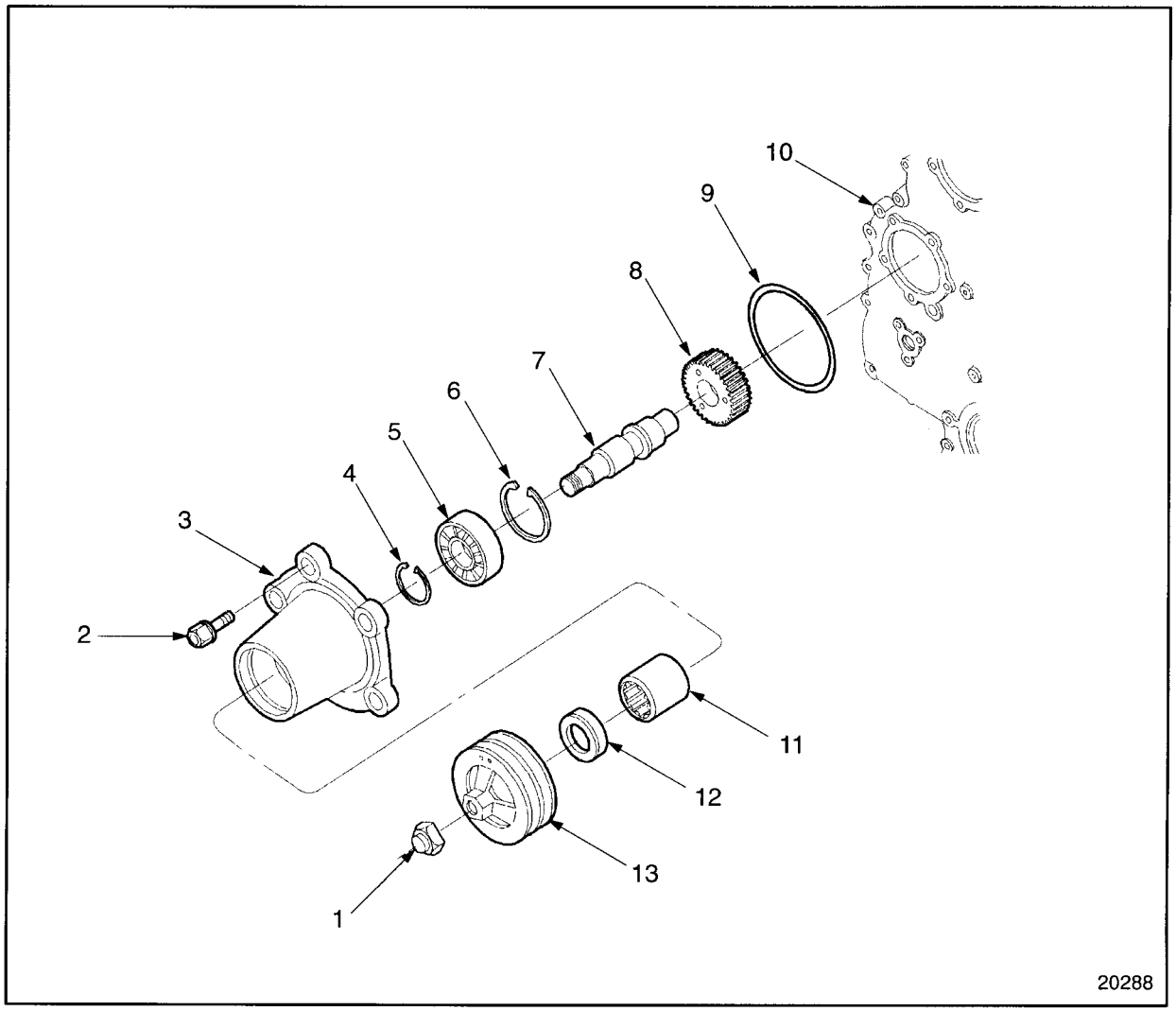

1. Locknut
2. Mounting Bolts (5)
3. Drive Housing
4. Snap Ring (Small)
5. Ball Bearing
6. Snap Ring (Large)
7. Drive Shaft
8. Drive Gear
9. O-Ring
10. Gear Case Cover
11. Needle Bearing
12. Oil Seal
13. Pulley

Figure 1-454 Accessory Drive Assembly Related Parts (Current Design)

 Copyright © 2004 DETROIT DIESEL CORPORATION

The accessory drive assembly is splash fed oil through two holes in the casting of the accessory drive housing. The oil returns to the crankcase via the gear case.

The accessory drive is driven by a drive gear which is pressed onto the drive shaft. The drive gear meshes with the bull gear and is driven at 2.41 times engine speed.

The drive shaft is supported by a ball bearing at the drive end and a needle bearing at the pulley end.

NOTE:
A design change has been made to the accessory drive assembly. The needle bearing inner race is now incorporated into the drive shaft. See Figure 1-453, and see Figure 1-454.

An O-ring is used to seal the accessory drive housing to the gear case cover.

(Rev. 2004) *All information subject to change without notice.*
6SE483 0401 Copyright © 2004 DETROIT DIESEL CORPORATION

1.29.1 Repair and Replacement of the Accessory Drive

To determine if repair is possible or replacement is necessary, perform the following procedures. See Figure 1-455.

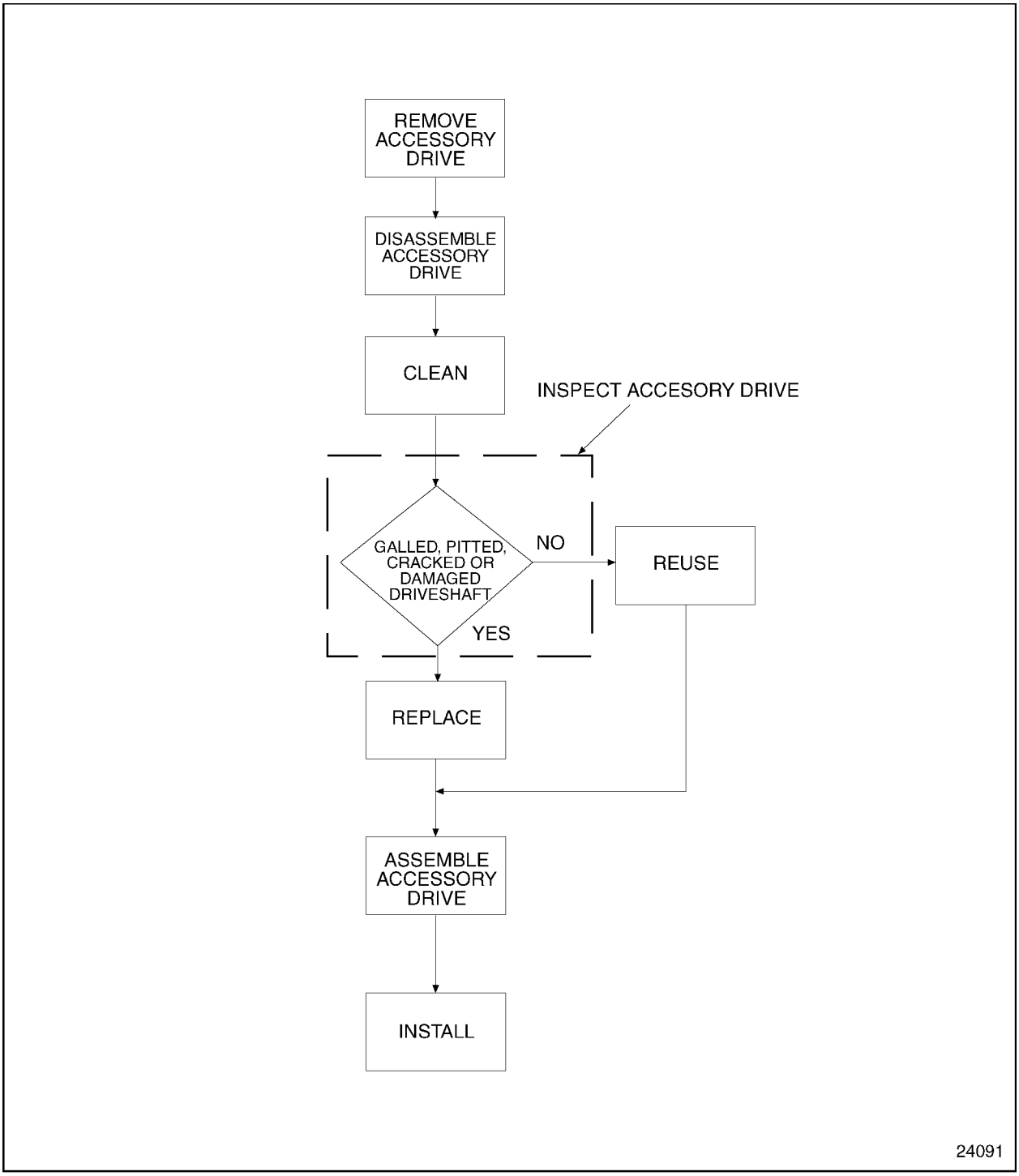

Figure 1-455 Flowchart for Repair or Replacement of Accessory Drive

 Copyright © 2004 DETROIT DIESEL CORPORATION

1.29.2 Removal and Cleaning of the Accessory Drive

Precleaning is not necessary.

Remove the accessory drive as follows:

1. Loosen the alternator mounting bolts and the adjusting rod nuts to get slack in the alternator drive belts. Remove the alternator drive belts. Refer to section 13.13.10.
2. Remove the five bolts that secure the accessory drive assembly to the gear case cover.
3. Remove the accessory drive assembly by pulling it straight out of the gear case cover to avoid damaging the rubber O-ring. See Figure 1-456.

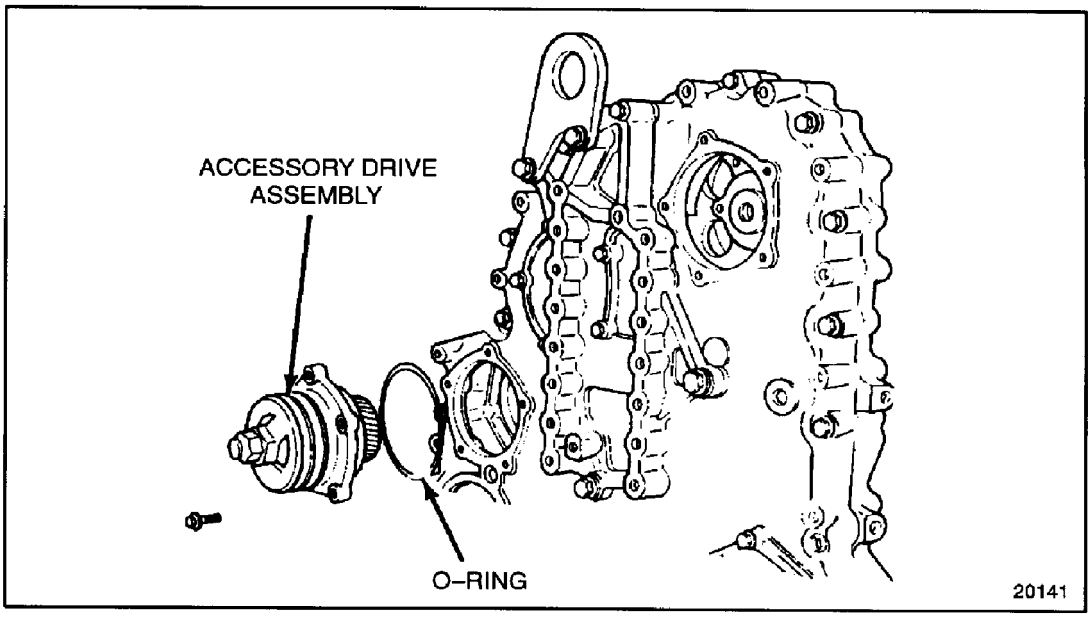

Figure 1-456 Accessory Drive Assembly Removal

(Rev. 2004) *All information subject to change without notice.*
6SE483 0401 Copyright © 2004 DETROIT DIESEL CORPORATION

1.29.3 Disassembly of the Accessory Drive

Disassemble the accessory drive as follows:

NOTE:
For disassembly and assembly of the accessory drive use toolset J 36024–D. See Figure 1-457.

NOTE:
Engines built after December 2000 use the following tools for accessory drive seal removal and installation:J 45533 seal remover, J 45833 seal installer and J 45877 seal

 Copyright © 2004 DETROIT DIESEL CORPORATION

runout gauge adapter to verify proper installation of seal in accessory drive. These tools are part of toolset J 36024–D. See Figure 1-457.

NOTE:
The seal, pulley and pulley nut are the only servicable parts of the accessory drive assemblies with unitized oil seal.

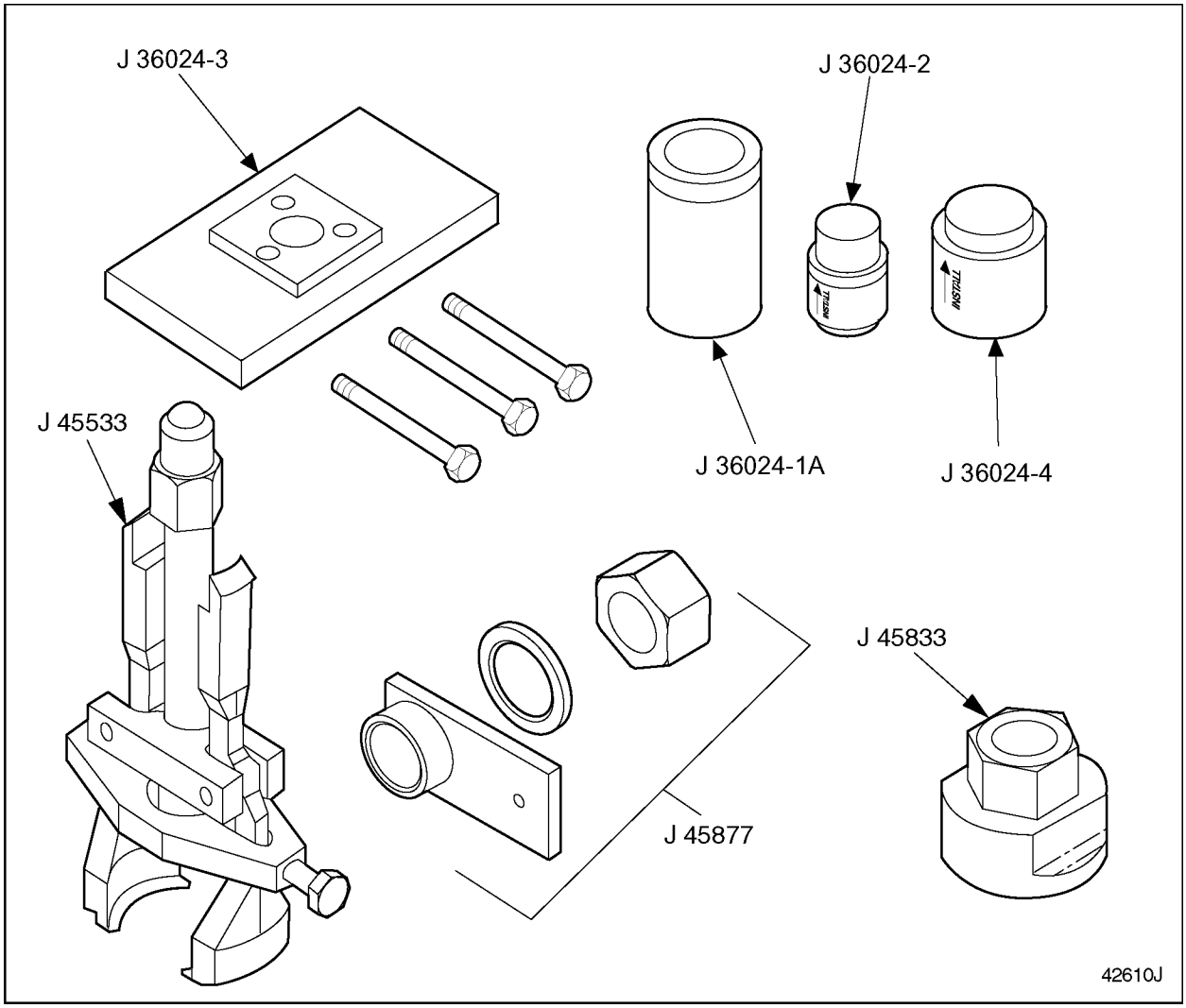

Figure 1-457 Accessory Drive Service Tool Set J 36024–D

(Rev. 2004) *All information subject to change without notice.*
6SE483 0401 Copyright © 2004 DETROIT DIESEL CORPORATION

1. Attach the accessory drive gear to the holding fixture, J 36024-3 (part of toolset J 36024–D) , using the three bolts provided. See Figure 1-458.

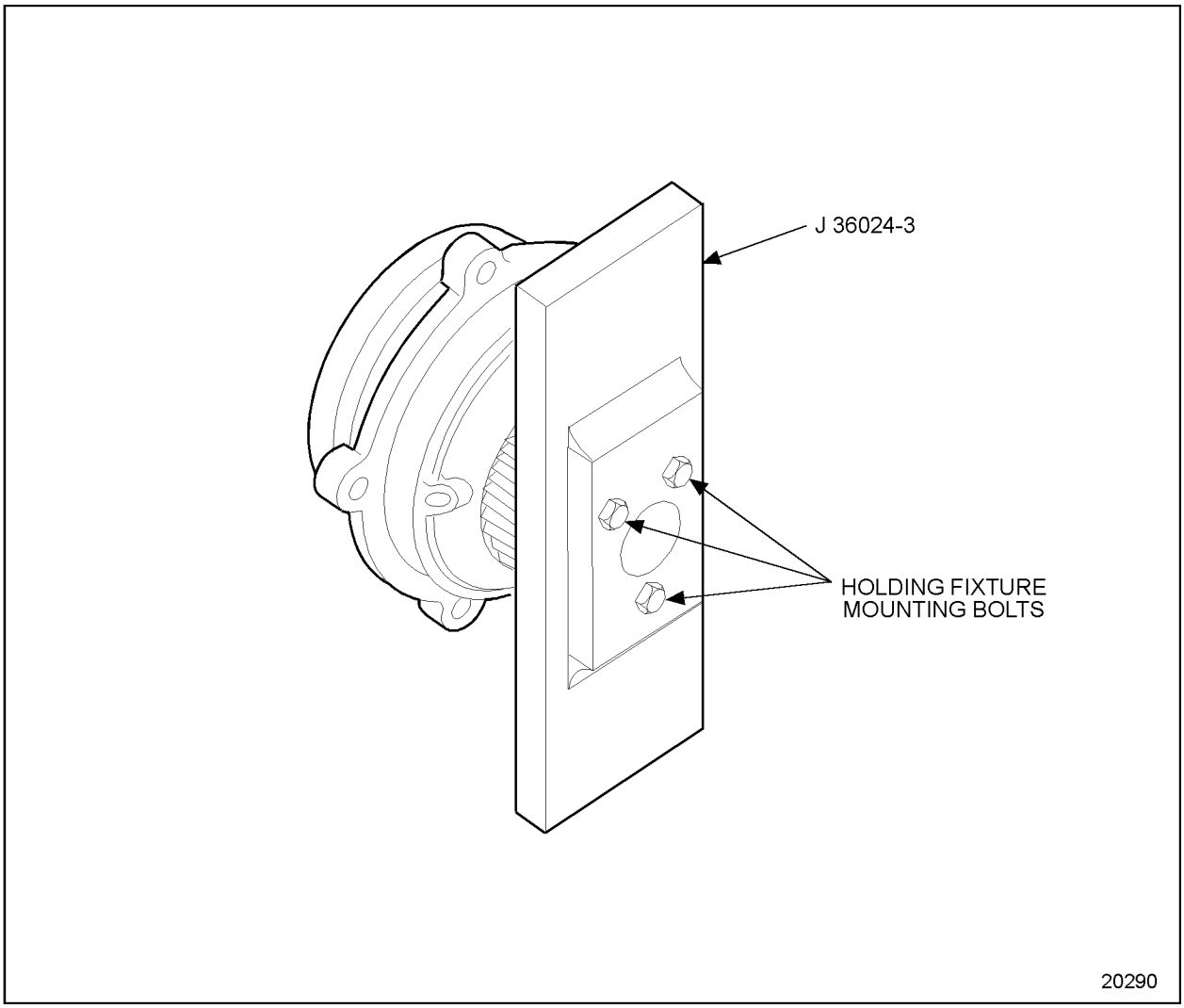

Figure 1-458 Holding Fixture

 Copyright © 2004 DETROIT DIESEL CORPORATION

2. Place the accessory drive assembly holding fixture into a vise. See Figure 1-459.

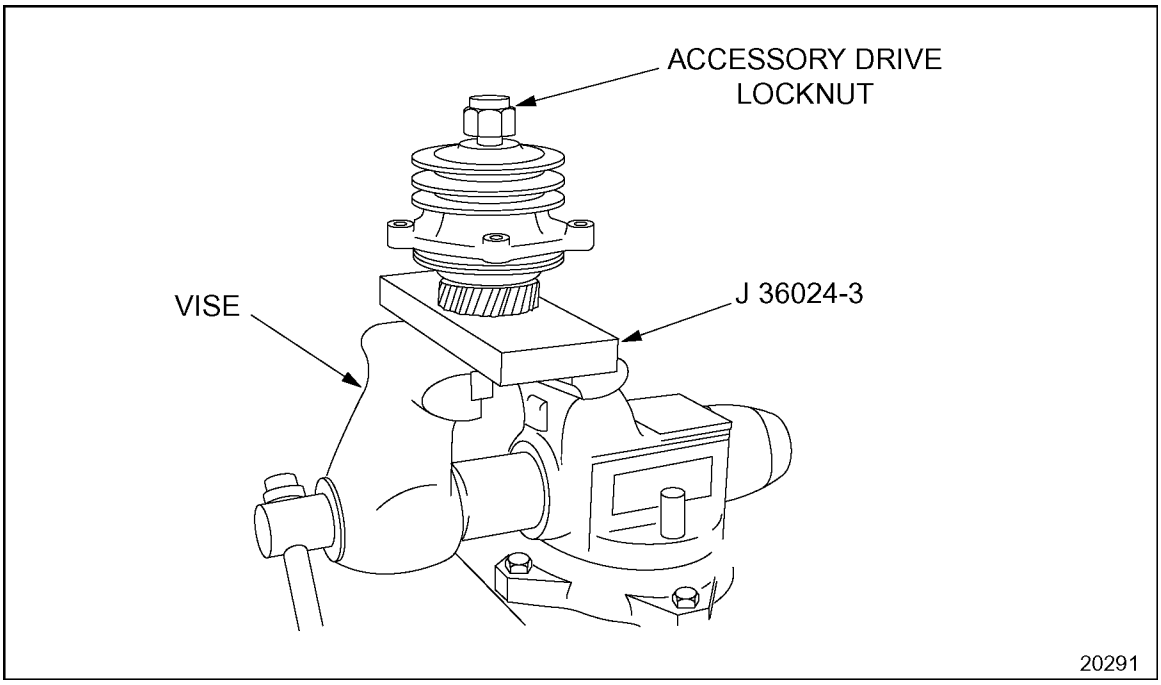

Figure 1-459 Accessory Drive Pulley Locknut Removal

3. Remove the accessory drive pulley locknut. See Figure 1-459.

(Rev. 2004) *All information subject to change without notice.*
6SE483 0401 Copyright © 2004 DETROIT DIESEL CORPORATION

4. Remove the accessory drive pulley by tapping it with a rubber hammer or fiber mallet. If the pulley does not come off easily, use a puller to remove it.

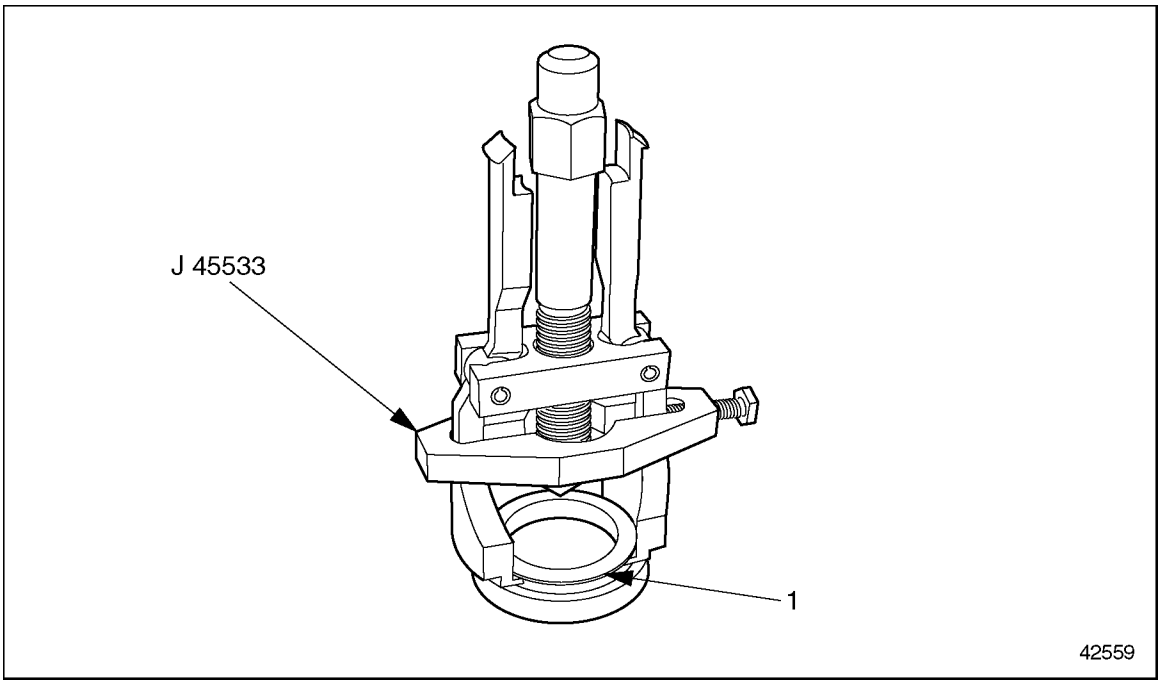

1. Seal Sleeve

Figure 1-460 J 45533 Accessory Drive Seal Remover

NOTE:
Perform steps 5, 6 and 7 unitized seal removal procedure for accessory drive assemblies on engines built after December 2000.

5. Using J 45533 (part of toolset J 36024–D) , remove seal sleeve.
   [a] Ensure taper end of puller bolt is pointed toward inside jaws.
   [b] Place inside jaws of tool over sleeve. See Figure 1-460.
   [c] Finger tighten hex bolt on side of tool.
   [d] Remove sleeve by tightening puller bolt.

 Copyright © 2004 DETROIT DIESEL CORPORATION

6. Removal of seal.
   [a] Invert puller bolt. See Figure 1-461.

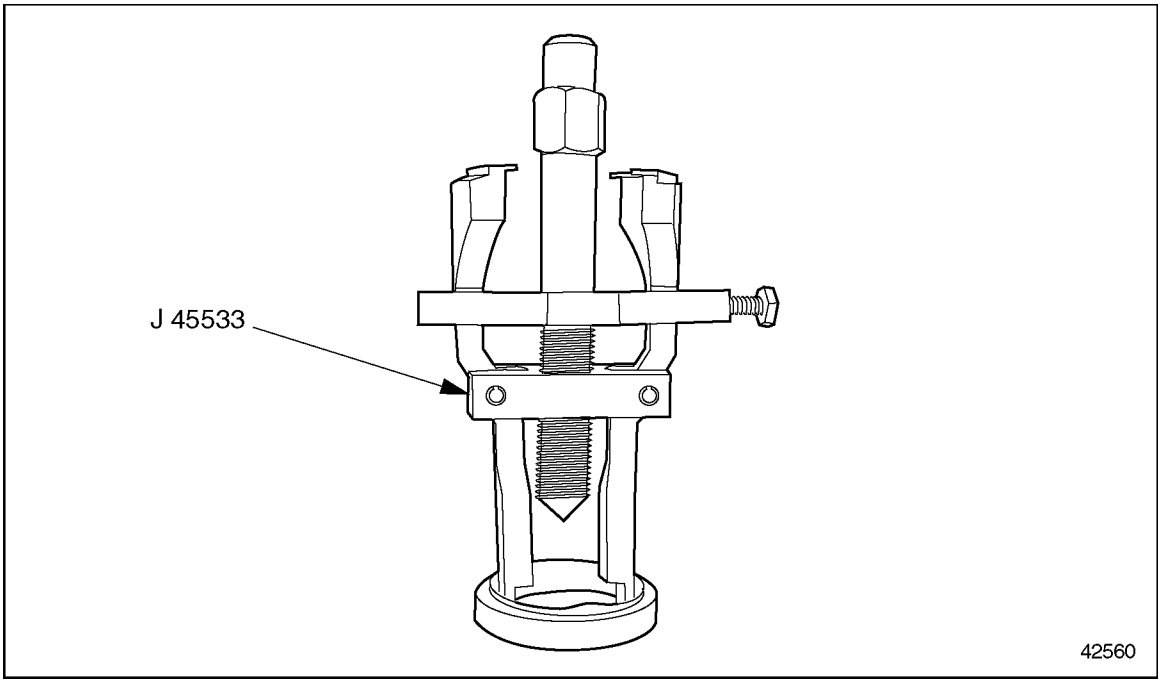

Figure 1-461 J 45533 Invert Puller Bolt

   [b] Loosen hex bolt on side of tool.
   [c] Using a rubber mallet, gently drive outside jaws between seal and shaft through the rubber membrane of seal until tool bottoms out.
   [d] Finger tighten hex bolt on side of tool.
   [e] Remove seal by tightening puller bolt.
7. Clean accessory drive housing at seal location.

(Rev. 2004) *All information subject to change without notice.*
6SE483 0401 Copyright © 2004 DETROIT DIESEL CORPORATION

8. Position the accessory drive assembly on a press bed with the holding fixture supported. See Figure 1-462.

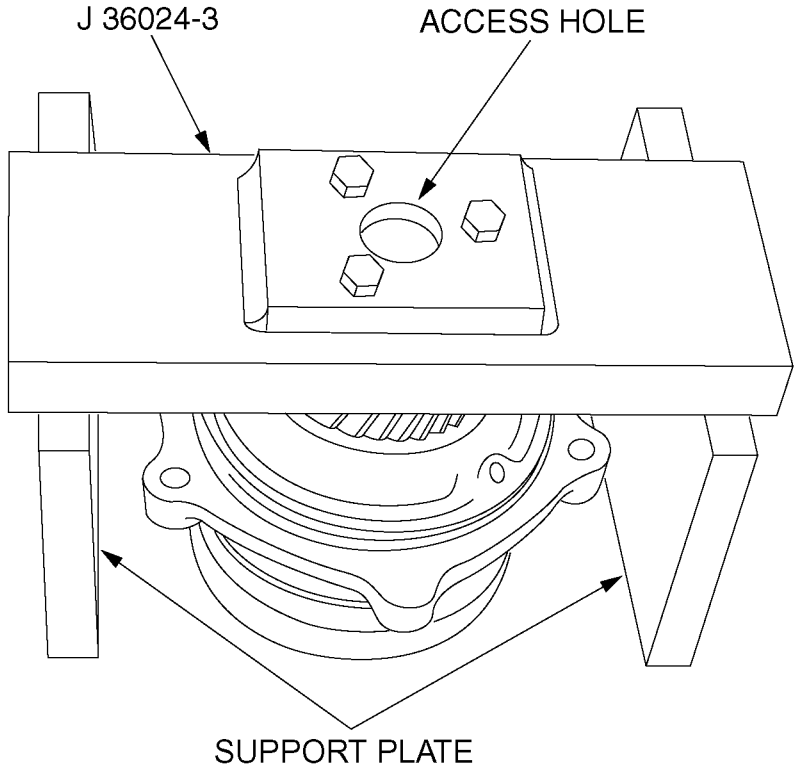

Figure 1-462 Accessory Drive Gear Removal

9. Using a press, apply pressure through the access hole in the holding fixture J 36024-3 (part of toolset J 36024–D), and press the drive shaft out of the gear. See Figure 1-462.

 Copyright © 2004 DETROIT DIESEL CORPORATION

10. Remove the snap ring from the accessory drive housing. See Figure 1-463.

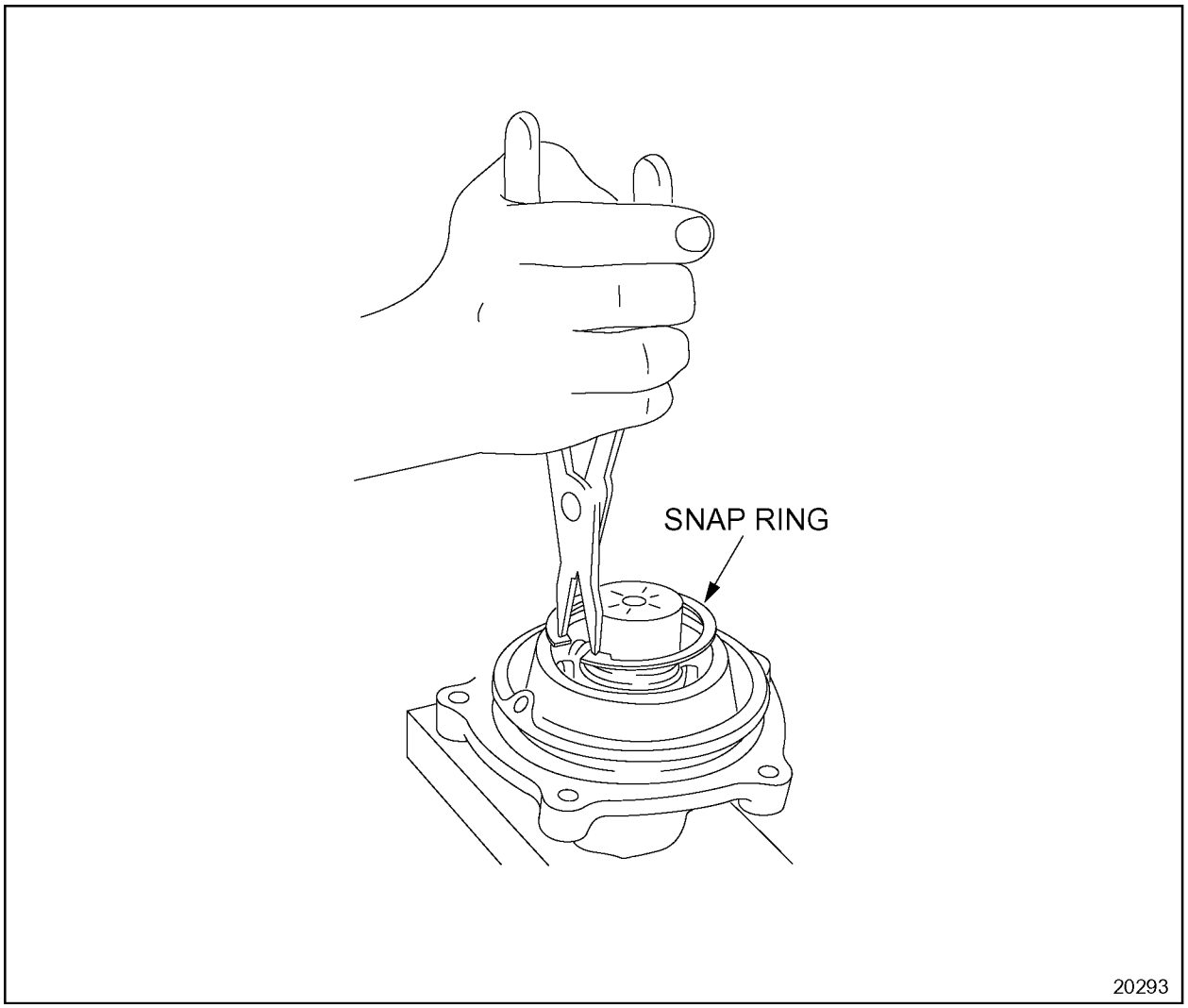

Figure 1-463 Snap Ring Removal

11. Turn the housing over and support the accessory drive housing on the machined surface using V-blocks.
12. Using a press, apply pressure to the pulley end of the shaft and remove the shaft and bearing assembly.
13. Turn the accessory drive housing over, and support it on the attaching bolt bosses using V-blocks.

NOTE:
On current design, the shaft serves as the inner race for the needle bearing.

(Rev. 2004) *All information subject to change without notice.*
6SE483 0401 Copyright © 2004 DETROIT DIESEL CORPORATION

NOTICE:
For assemblies with inner race for needle bearing, place the accessory drive shaft in a vise with soft jaws taking care not to damage the shaft surface.

14. Install J 36024-2 (part of toolset J 36024–D) and apply pressure to remove the needle bearing. See Figure 1-464.

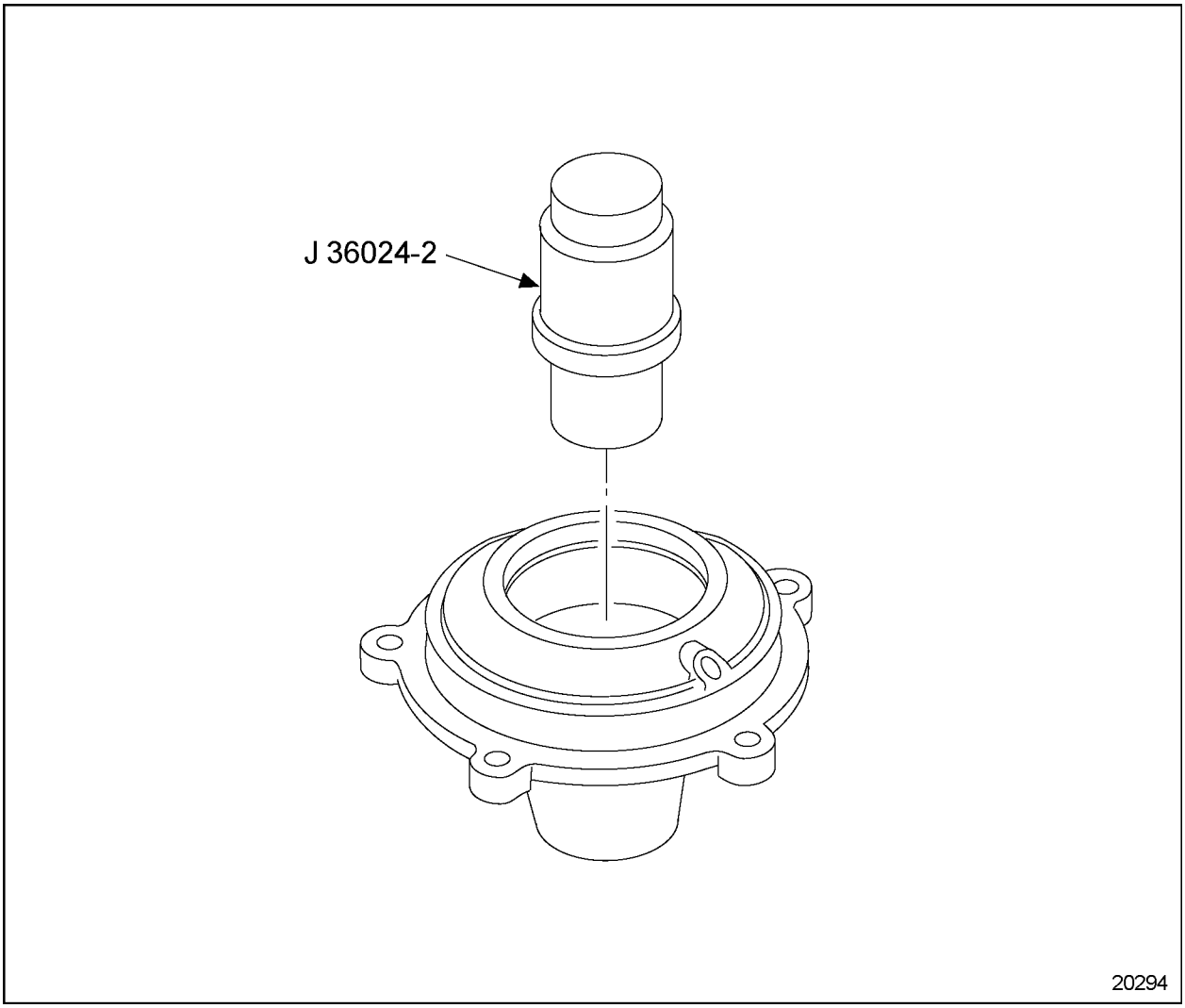

Figure 1-464 Needle Bearing Removal

 Copyright © 2004 DETROIT DIESEL CORPORATION

15. Remove the needle bearing inner race from the accessory drive shaft with a two jaw puller utilizing the slots provided in the shaft. See Figure 1-465.

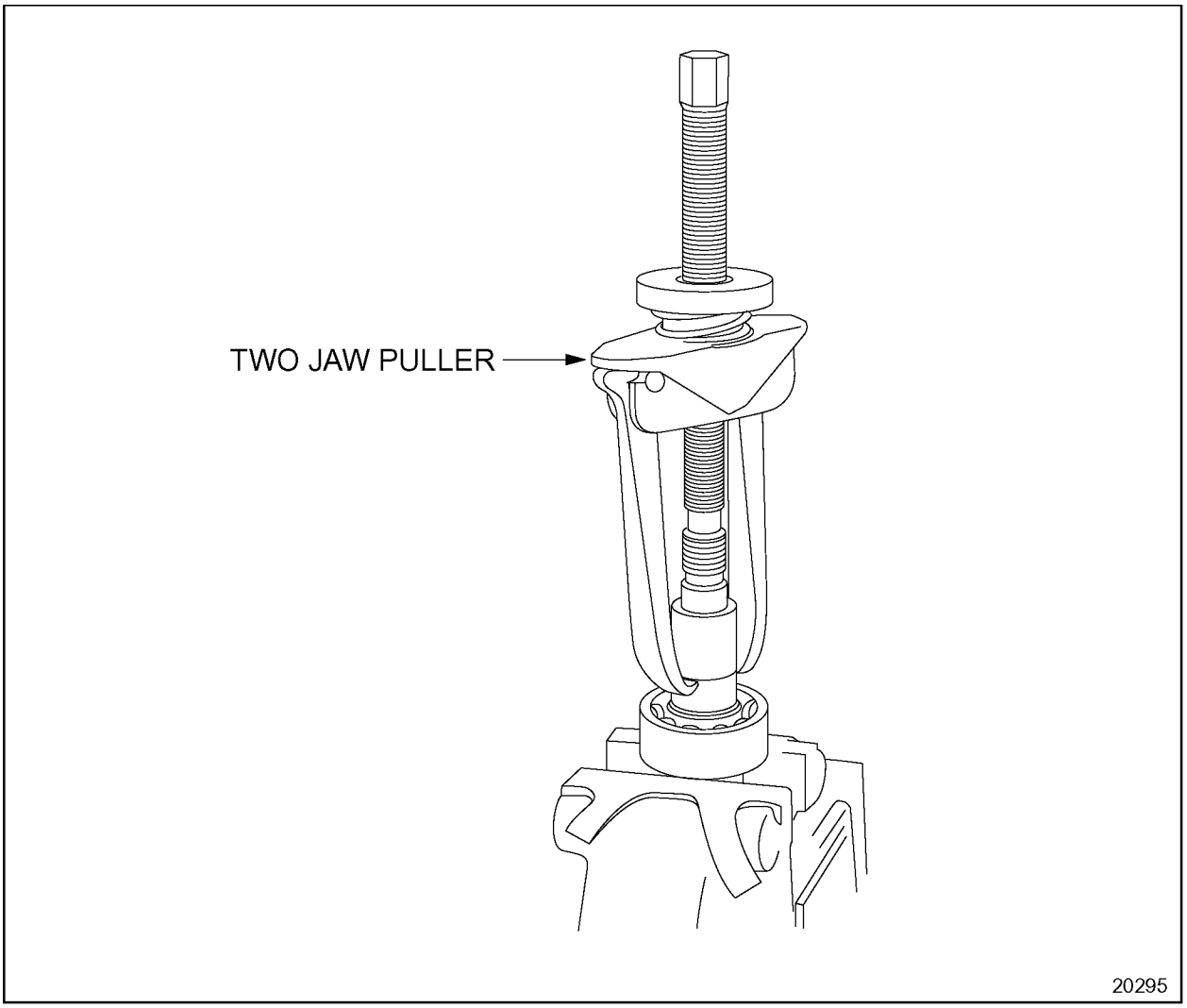

Figure 1-465 Bearing Inner Race Removal

(Rev. 2004) *All information subject to change without notice.*
6SE483 0401 Copyright © 2004 DETROIT DIESEL CORPORATION

16. Remove the snap ring from the accessory drive shaft. See Figure 1-466.

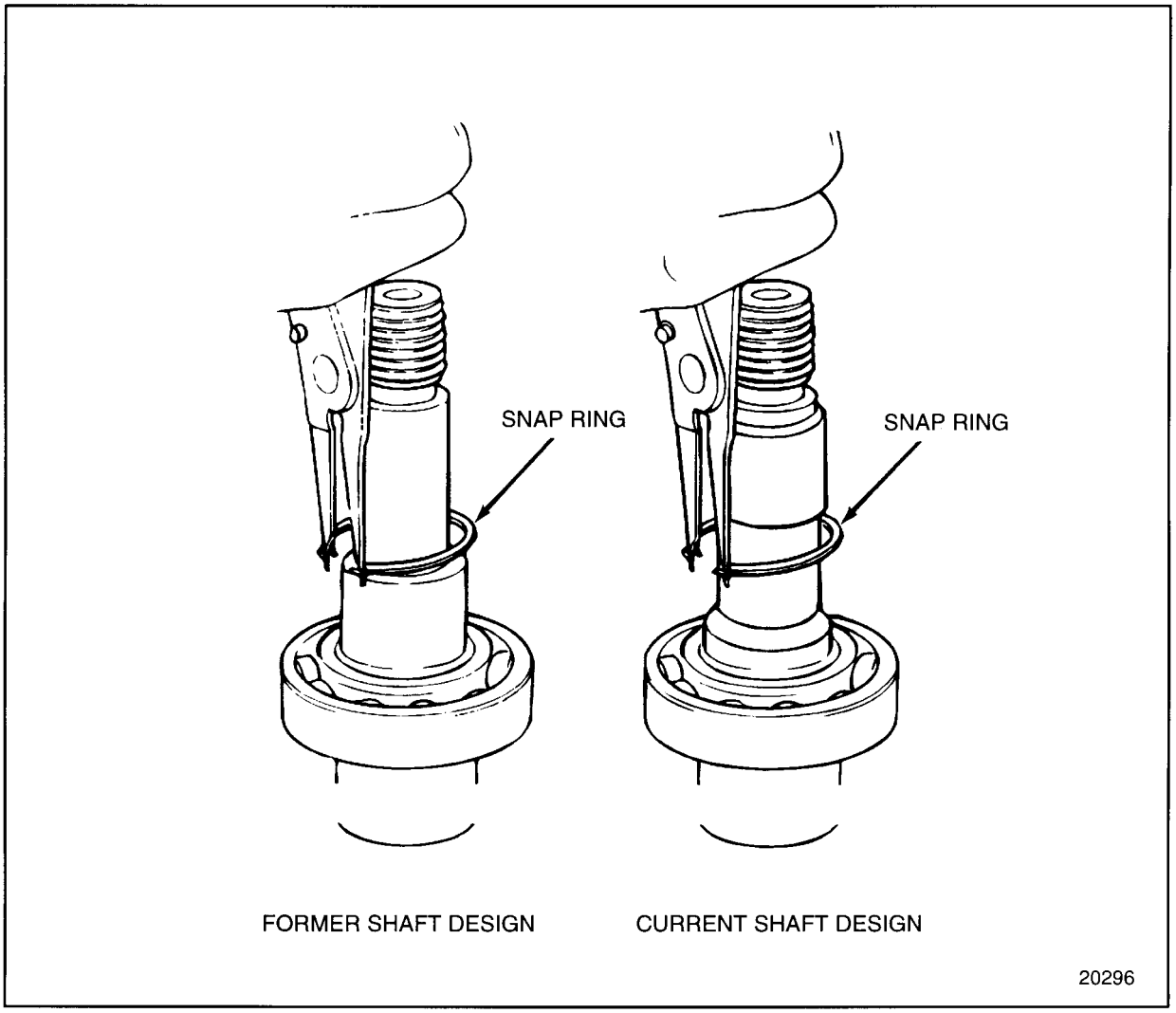

Figure 1-466 Snap Ring Removal

 Copyright © 2004 DETROIT DIESEL CORPORATION

17. Position two steel press plates under the ball bearing outer race. See Figure 1-467.

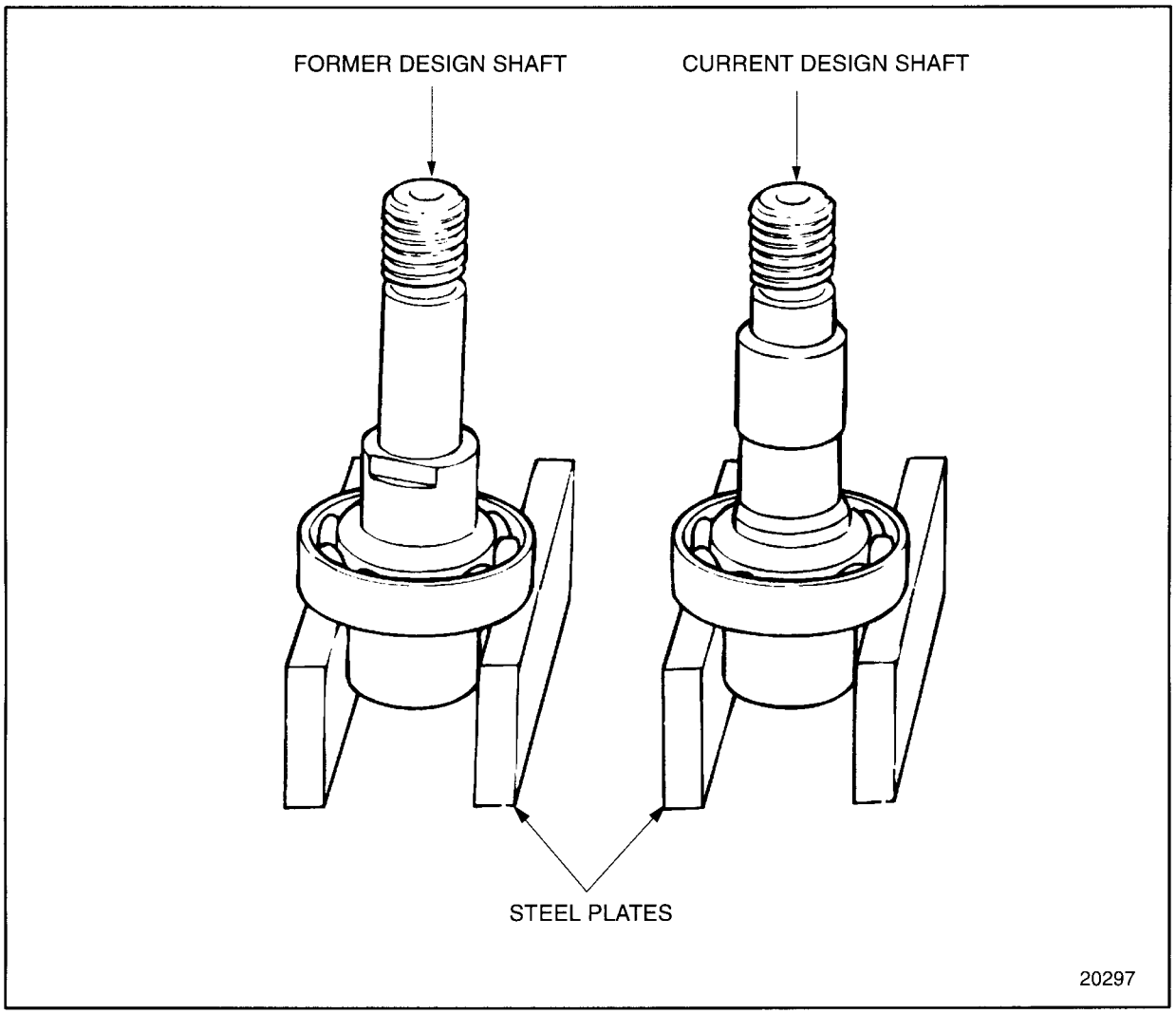

Figure 1-467 Position of the Steel Press Plates

NOTE:
Whenever the needle or ball bearing is removed from the shaft, they MUST be replaced with new bearing assemblies.

18. Use a press to apply pressure to the top of the shaft and remove the ball bearing from the shaft.

(Rev. 2004) *All information subject to change without notice.*
6SE483 0401 Copyright © 2004 DETROIT DIESEL CORPORATION

1.29.3.1 Inspection of the Accessory Drive

Clean the accessory drive prior to inspection as follows:

1. Clean all of the parts with clean fuel oil.

CAUTION:

To avoid injury from flying debris when using compressed air, wear adequate eye protection (face shield or safety goggles) and do not exceed 40 psi (276 kPa) air pressure.

2. Dry parts with compressed air.

Inspect the accessory drive as follows:

1. Visually examine the drive shaft for damage check the drive shaft for galling, pitting, cracks, or other damage.
   [a] If any damage is detected, replace with a new part.
   [b] If no damage is found, reuse the part.

 Copyright © 2004 DETROIT DIESEL CORPORATION

1.29.4 Assembly of the Accessory Drive

Assemble the accessory drive as follows:

1. Place a new ball bearing on the accessory drive shaft. Use tool J 36024-1A (part of toolset J 36024–D) and a press to install the bearing onto the shaft until it bottoms out against the shoulder of the drive shaft. See Figure 1-468.

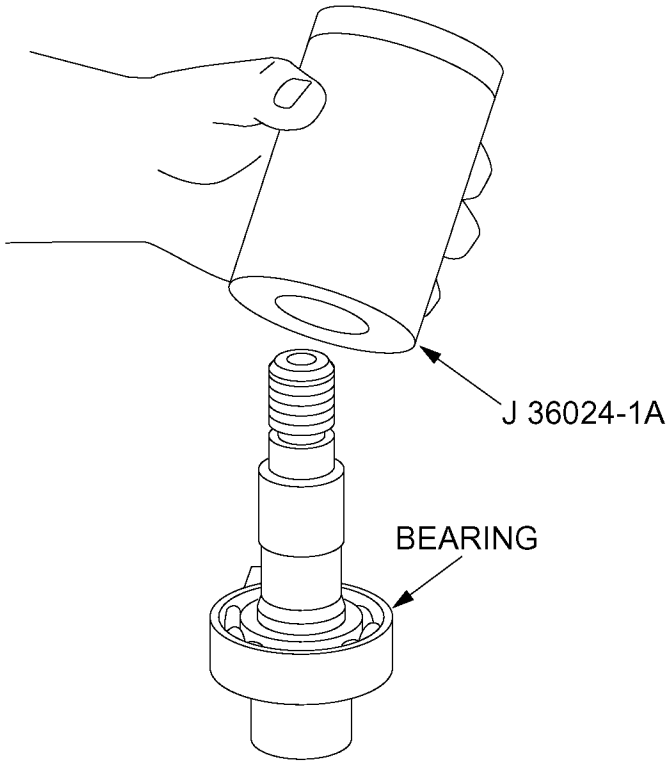

Figure 1-468 Bearing Installation

(Rev. 2004) *All information subject to change without notice.*
6SE483 0401 Copyright © 2004 DETROIT DIESEL CORPORATION

2. Install the snap ring to the accessory drive shaft making sure it is fully seated in the groove a full 360 degrees See Figure 1-469.

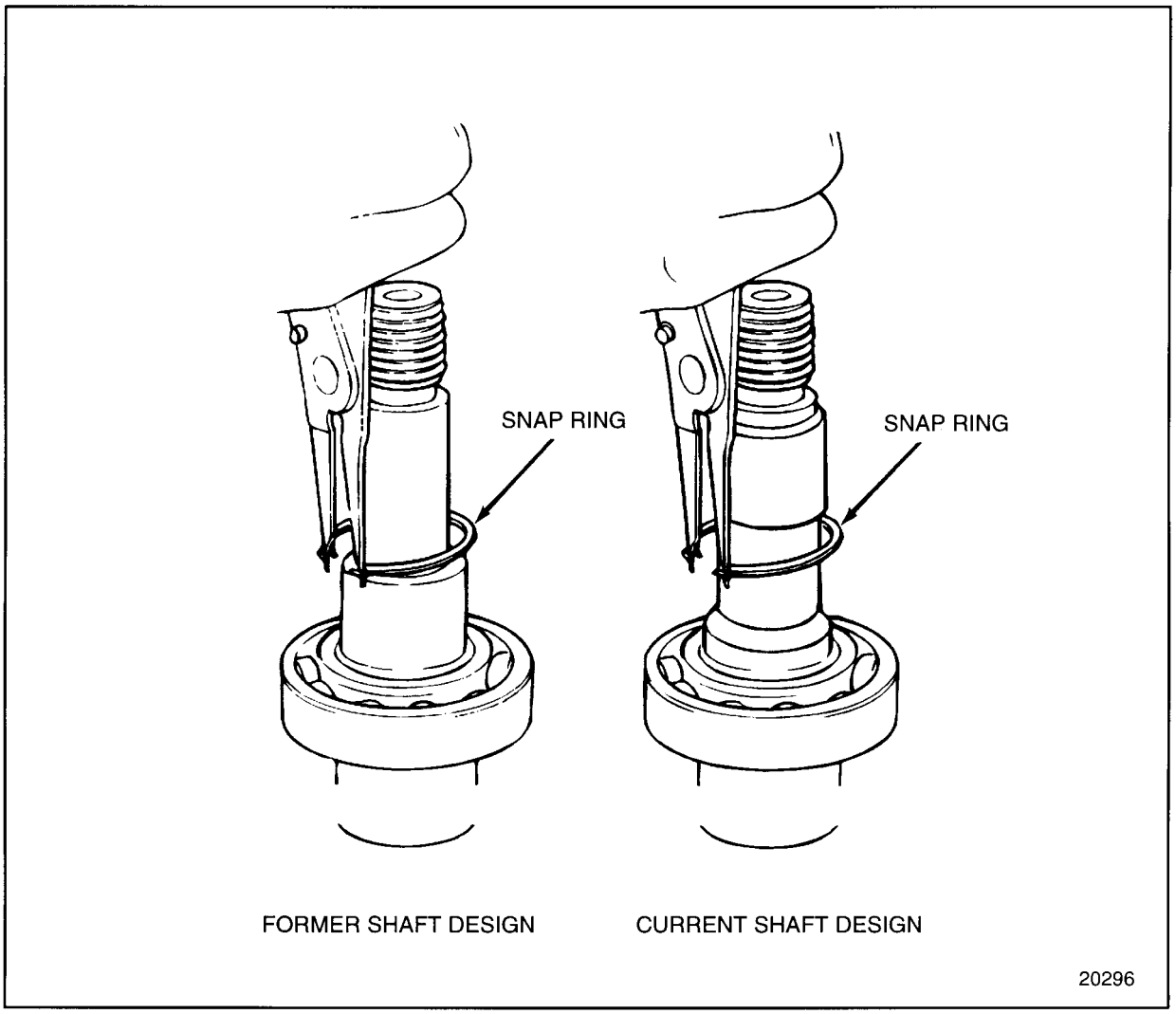

Figure 1-469 Snap Ring Installation

 Copyright © 2004 DETROIT DIESEL CORPORATION

3. Place the needle bearing inner race on the accessory drive shaft. Use tool J 36024-1A (part of toolset J 36024–D) and a press to install the bearing inner race to the shaft until it is tight against the shoulder. See Figure 1-470.

NOTE:
On current design accessory drive shaft, the needle bearing inner race is incorporated into the shaft.

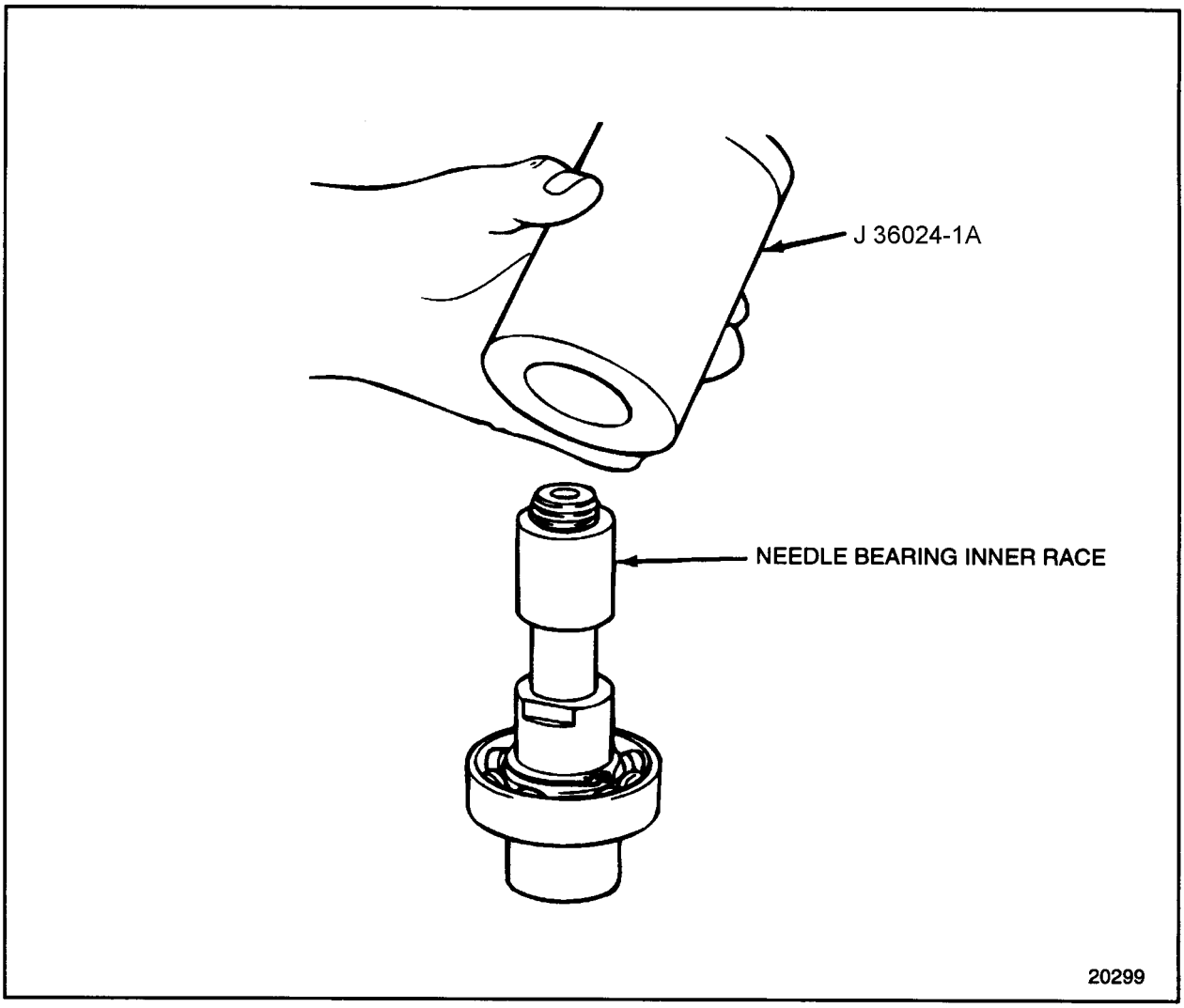

Figure 1-470 Needle Bearing Inner Race Installation

(Rev. 2004) *All information subject to change without notice.*
6SE483 0401 Copyright © 2004 DETROIT DIESEL CORPORATION

4. Install the needle bearing to the accessory drive housing using tool J 36024-2 (part of toolset J 36024–D). See Figure 1-471.

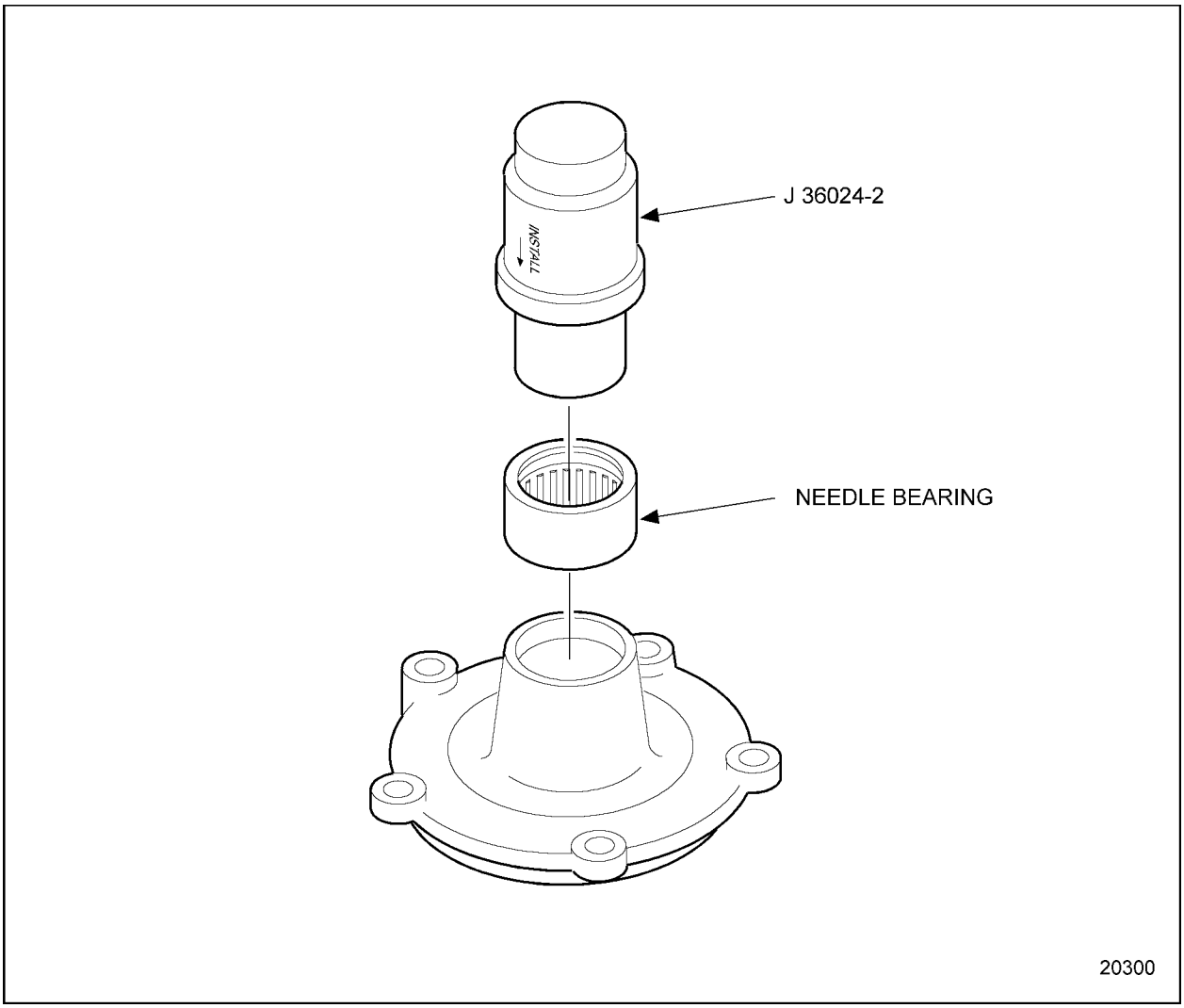

Figure 1-471 Needle Bearing Installation

NOTE:
The end of the bearing with the identification numbers must be against the installer.

NOTE:
The word INSTALL and an arrow are etched into the tool, J 36024-2 (part of toolset J 36024–D), to facilitate correct bearing installation.

 Copyright © 2004 DETROIT DIESEL CORPORATION

5. Lubricate the oil seal contact area of the accessory drive housing with a thin film of engine oil.
6. Install the accessory drive oil seal to the accessory drive housing using the seal installer, J 36024-4 (part of toolset J 36024–D), and a plastic hammer or fiber mallet. The oil seal must be installed flush to 0.25 mm (0.010 in.) below the face of the housing. See Figure 1-472.

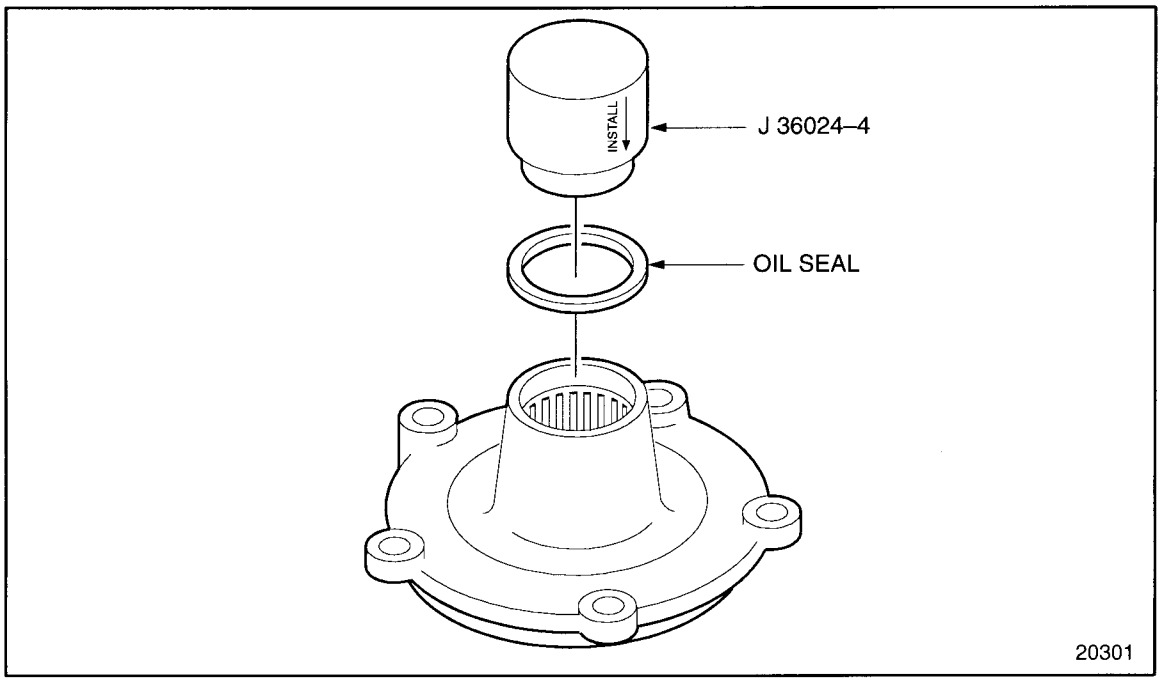

Figure 1-472 Accessory Drive Oil Seal Installation

7. Lubricate the oil seal with a thin film of engine oil.
8. Support the holding fixture, J 36024-3 (part of toolset J 36024–D) on two steel plates and position the accessory drive housing into the hole in the fixture. See Figure 1-463.

(Rev. 2004) *All information subject to change without notice.*
6SE483 0401 Copyright © 2004 DETROIT DIESEL CORPORATION

9. Install the drive shaft to the housing. See Figure 1-473.

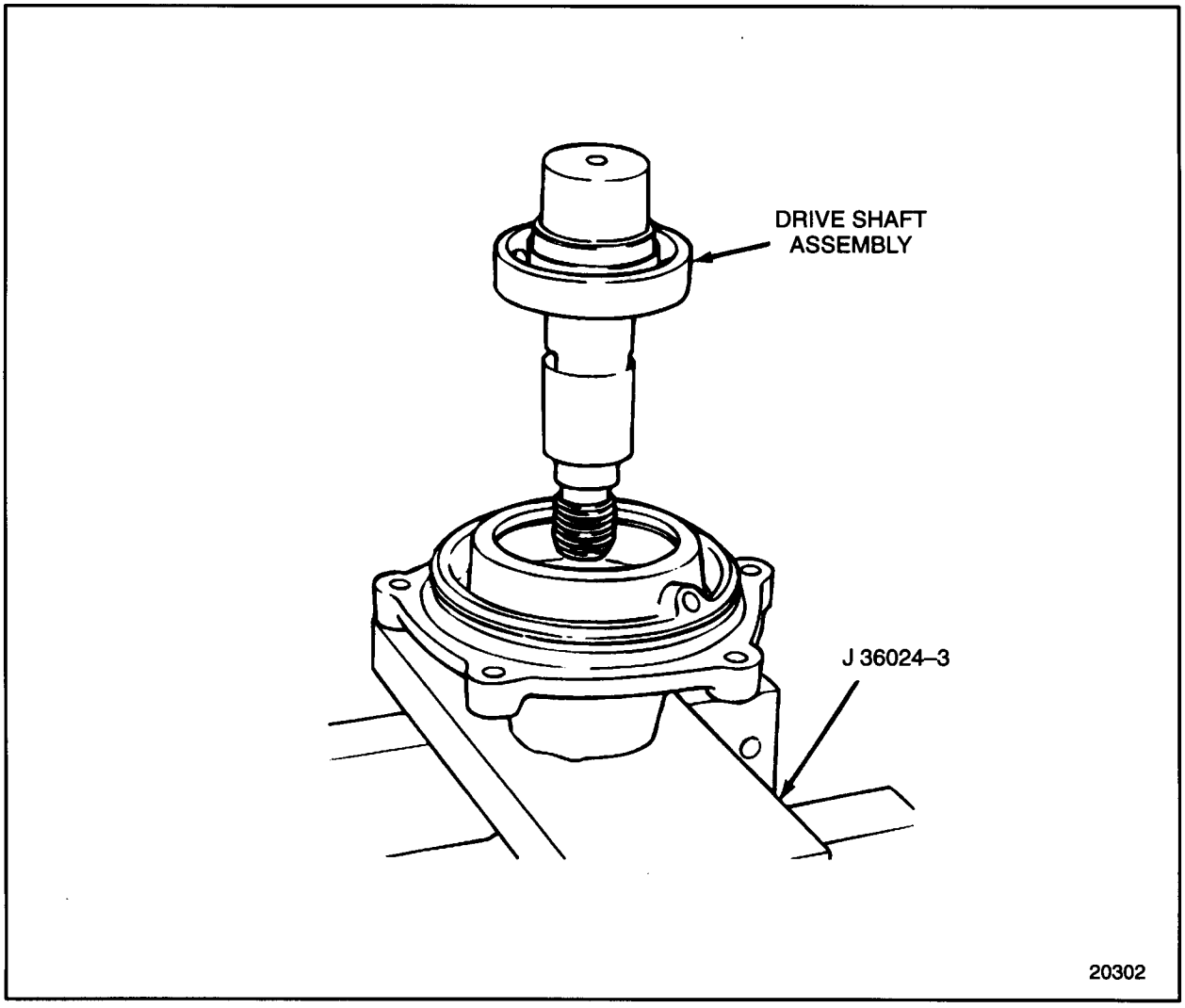

Figure 1-473 Drive Shaft Installation

10. Press the drive shaft into the housing by placing tool, J 36024-1A (part of toolset J 36024–D) , on the bearing outer race.

 Copyright © 2004 DETROIT DIESEL CORPORATION

11. Press the bearing into the housing until the bearing is seated against the shoulder of the housing. See Figure 1-474.

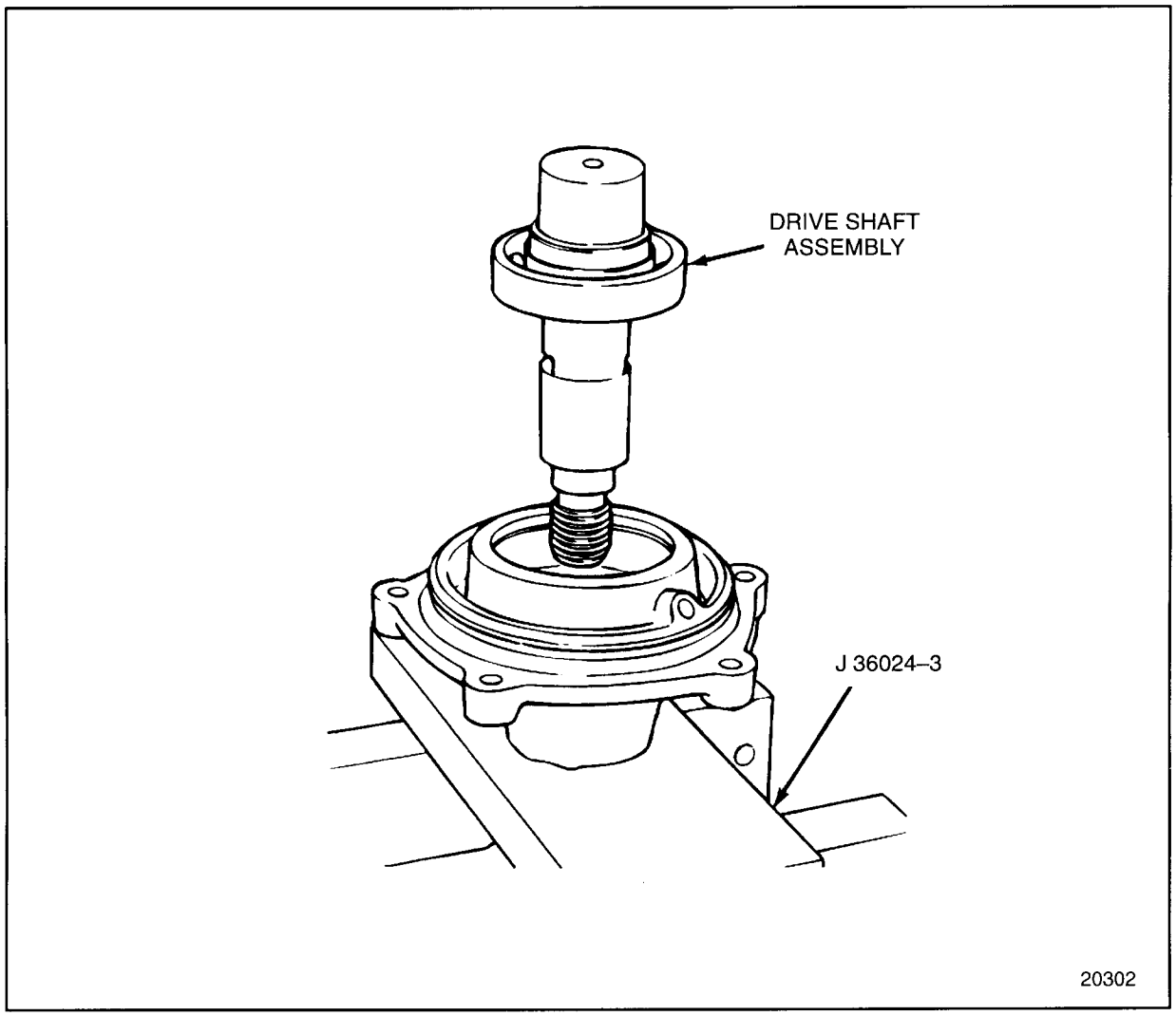

Figure 1-474 Bearing Installation

(Rev. 2004) *All information subject to change without notice.*
6SE483 0401 Copyright © 2004 DETROIT DIESEL CORPORATION

12. Install the snap ring to the accessory drive housing making sure the snap ring is fully seated in the groove a full 360 degrees See Figure 1-475.

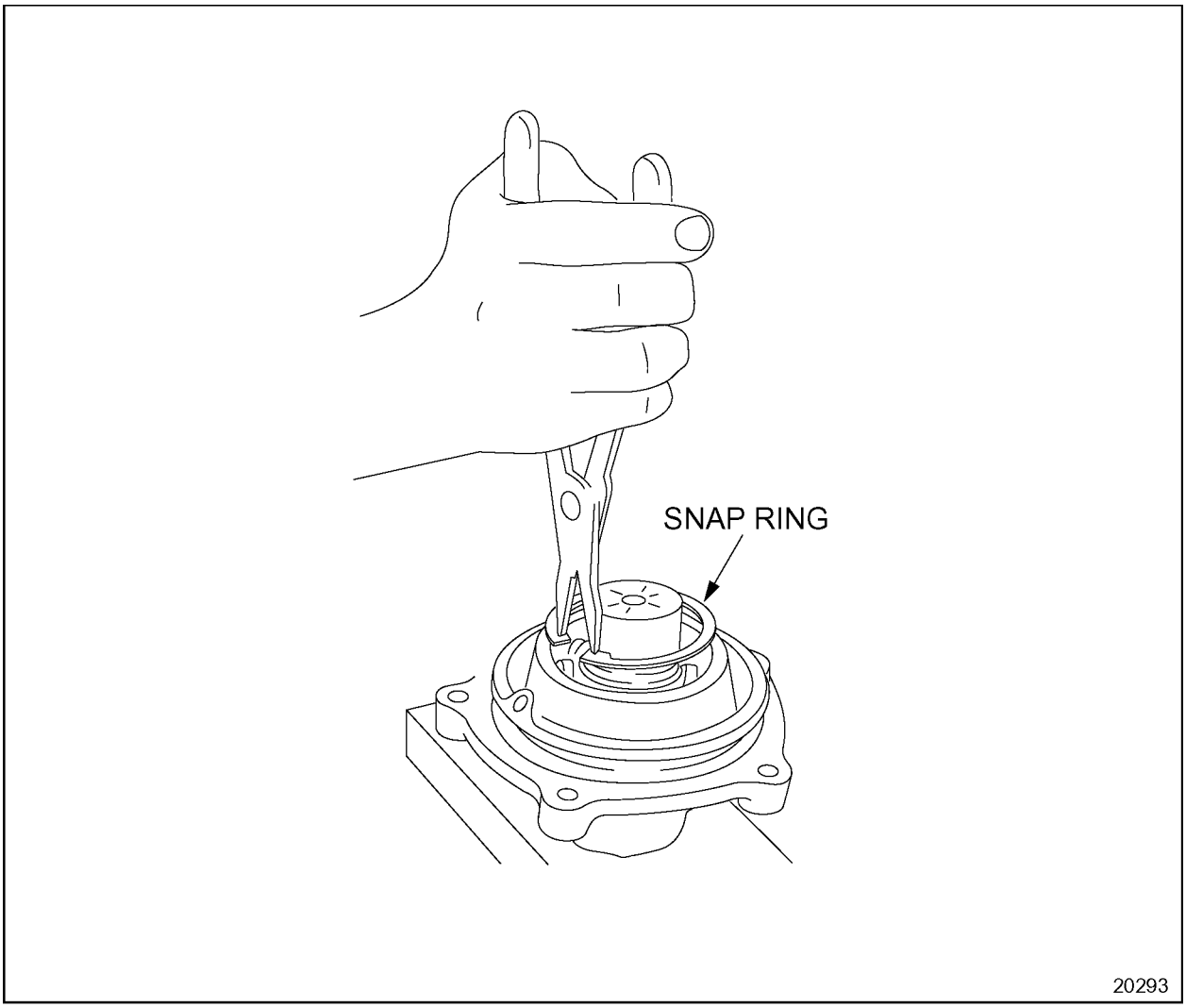

Figure 1-475 Snap Ring Installation

13. Lubricate the contact surfaces of the bearing with clean engine lubricating oil.

 Copyright © 2004 DETROIT DIESEL CORPORATION

14. A film of Lubriplate® must be applied to the drive gear end of the accessory drive shaft. See Figure 1-476.

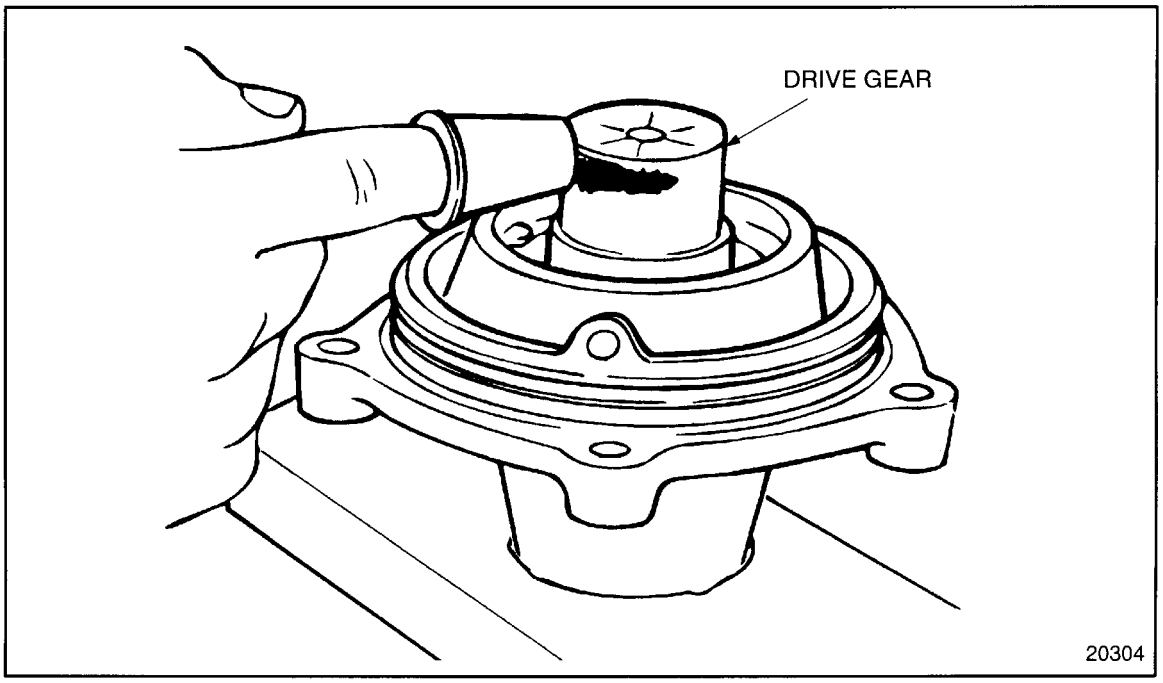

Figure 1-476 Drive Gear Installation Preparation

(Rev. 2004) *All information subject to change without notice.*
6SE483 0401 Copyright © 2004 DETROIT DIESEL CORPORATION

15. Use a press to install the drive gear on the accessory drive shaft until it is flush with the drive shaft end. Make sure the three threaded holes are facing up. See Figure 1-477.

NOTE:
Support the opposite end of the drive shaft on the press bed when pressing the gear on the shaft. A minimum press load of 17.8 kN (4000 lb) must be obtained when pressing the gear on the shaft.

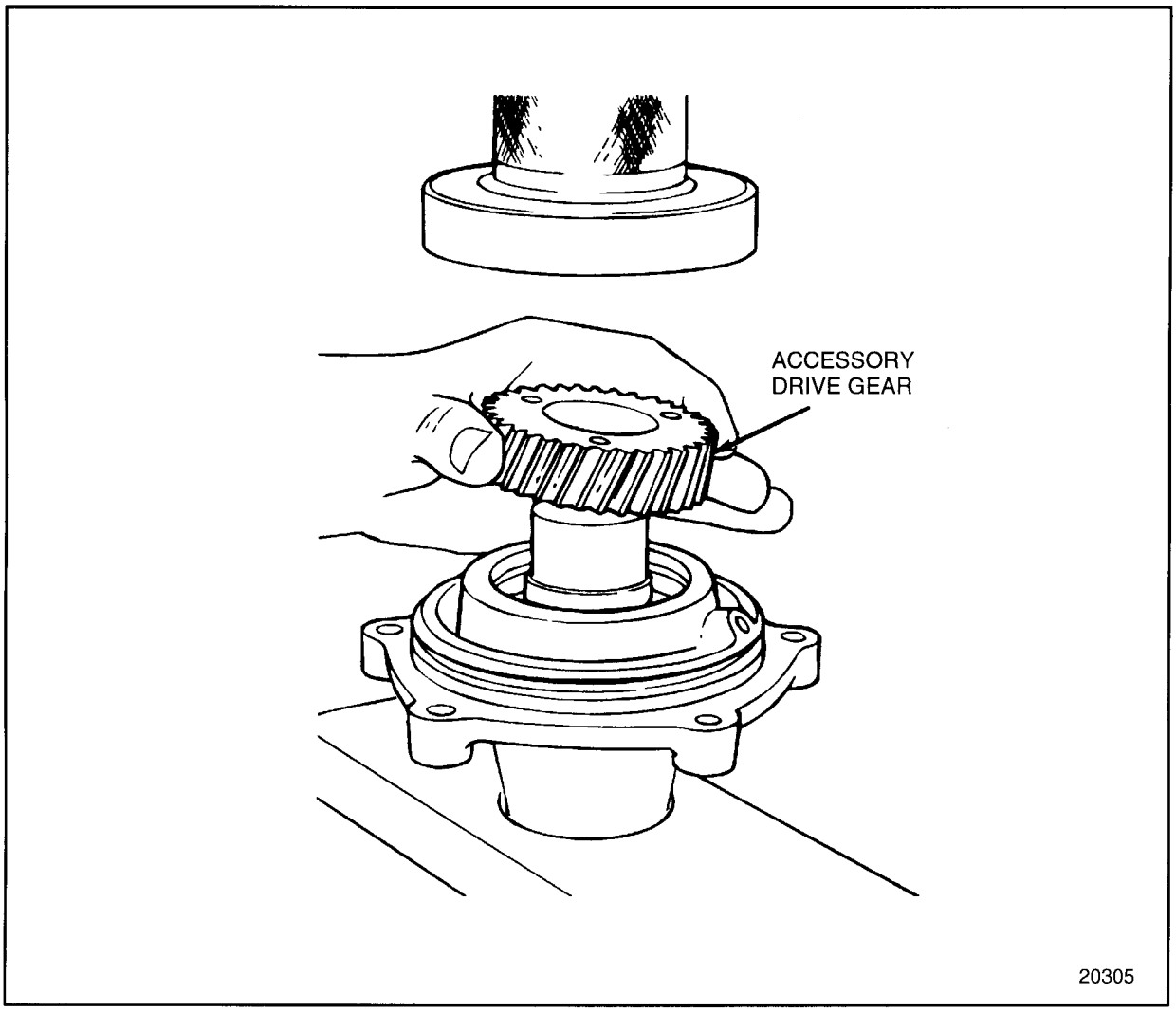

Figure 1-477 Accessory Drive Gear Installation

NOTE:
For accessory drive assemblies with unitized seals, effective with engines built after December 2000 perform the procedures in steps 16 and 17.

 Copyright © 2004 DETROIT DIESEL CORPORATION

16. Install seal using J 45833 (part of toolset J 36024–D) by tightening installer nut until a positive stop is obtained. See Figure 1-478.

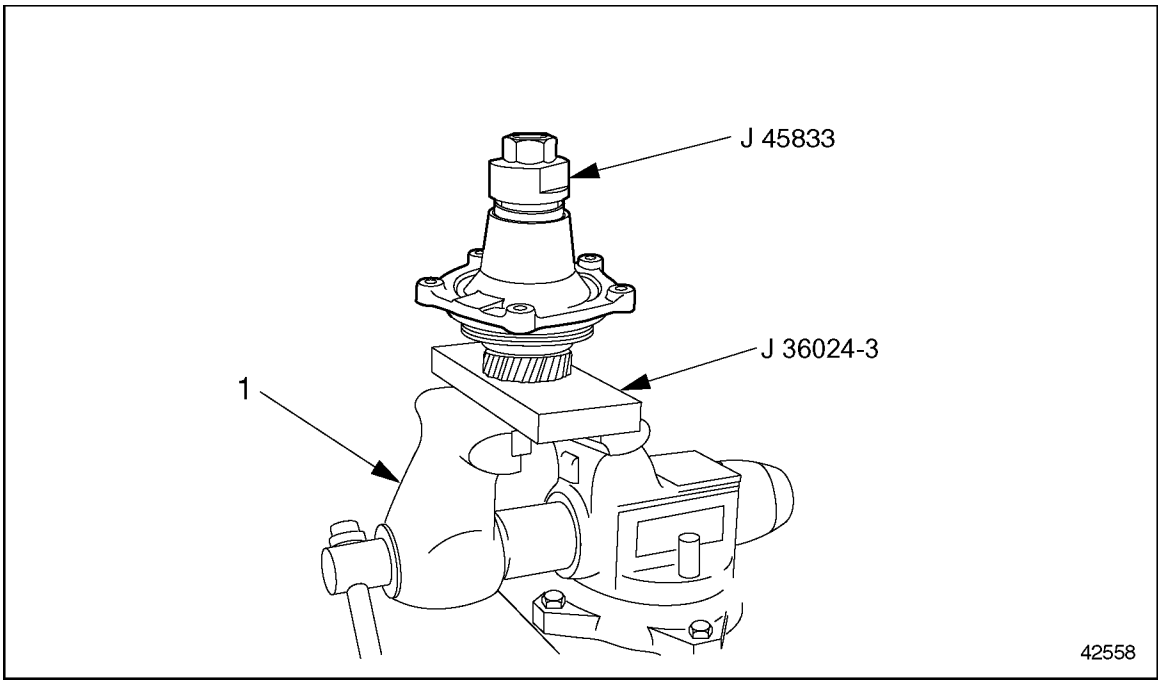

1. Vise

Figure 1-478 J 45833 Accessory Drive Seal Installer

(Rev. 2004) *All information subject to change without notice.*
6SE483 0401 Copyright © 2004 DETROIT DIESEL CORPORATION

17. Measure sleeve and seal run out using J 45877 (part of toolset J 36024–D) and a dial indicator. Total indicator deflection should not exceed 0.0762 mm (0.003 in.) for the sleeve and 0.1778 mm (0.007 in.) for the seal. If the run out is greater for either measurement, install a new seal. See Figure 1-479.

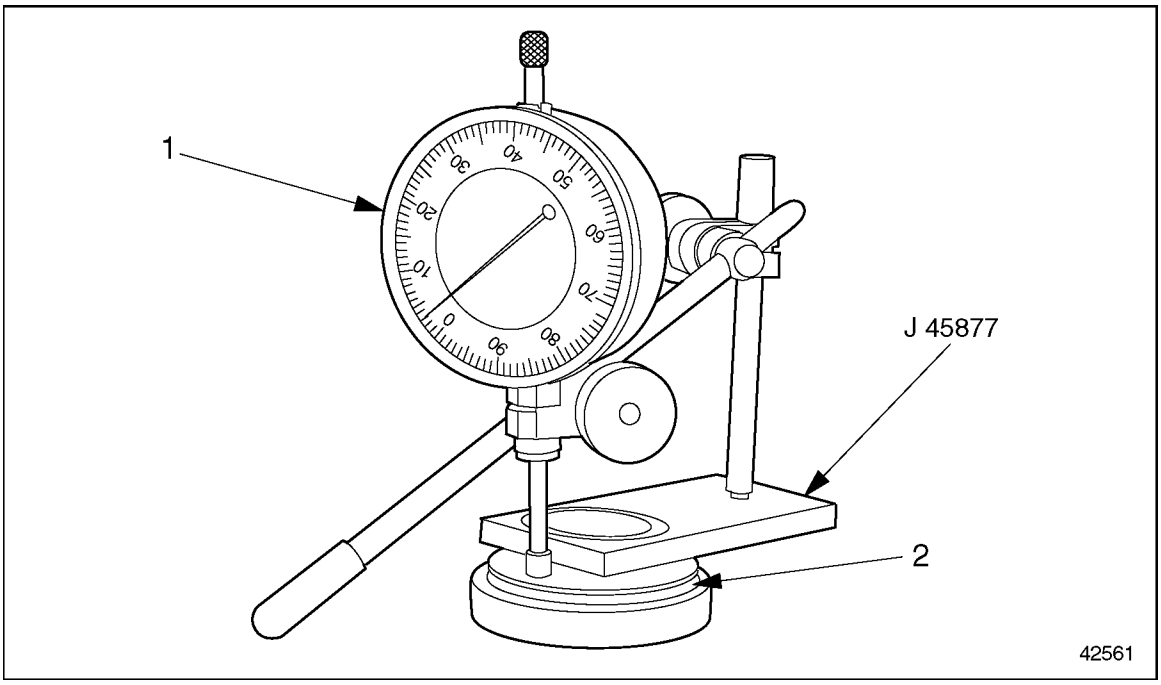

1. Dial Indicator
2. Seal Sleeve

Figure 1-479 J 45877 Seal Run Out Gauge Adaptor

18. Install the accessory drive pulley to the shaft.

NOTE:
If necessary, use tool J 36024-1A (part of toolset J 36024–D) to seat the pulley on the shaft. If pressing is necessary, the opposite (gear) end of the shaft must be supported during the pressing operation.

19. Attach J 36024-3 (part of toolset J 36024–D), to the drive gear. See Figure 1-457.
20. Place the accessory drive assembly holding fixture into a vise. See Figure 1-480.

 Copyright © 2004 DETROIT DIESEL CORPORATION

21. Install and torque the accessory drive pulley locknut to 360-400 N·m (266-295 lb·ft). See Figure 1-480.

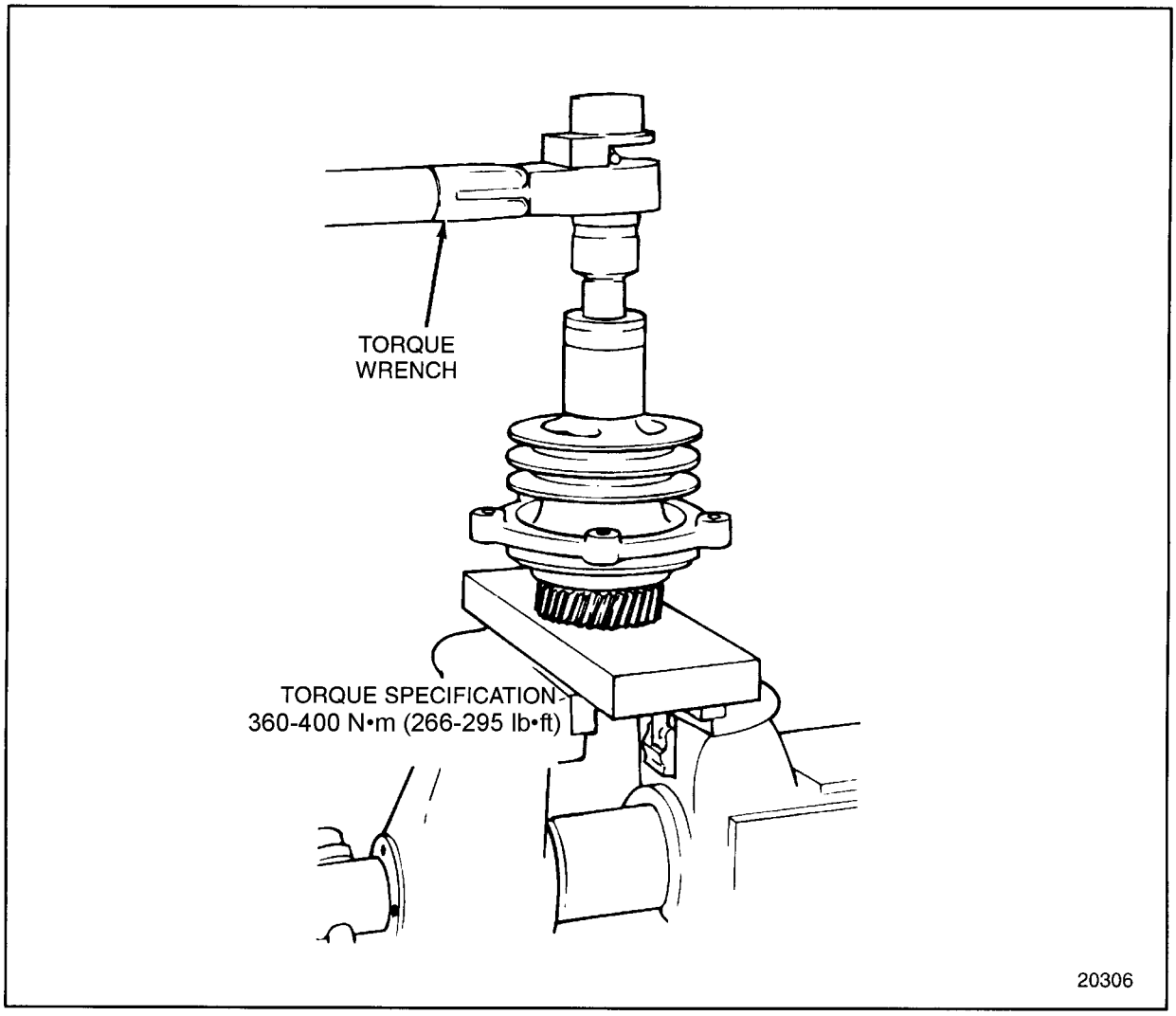

Figure 1-480 Accessory Drive Pulley Locknut Tightening

(Rev. 2004) *All information subject to change without notice.*
6SE483 0401 Copyright © 2004 DETROIT DIESEL CORPORATION

22. Support the accessory drive assembly. See Figure 1-481.

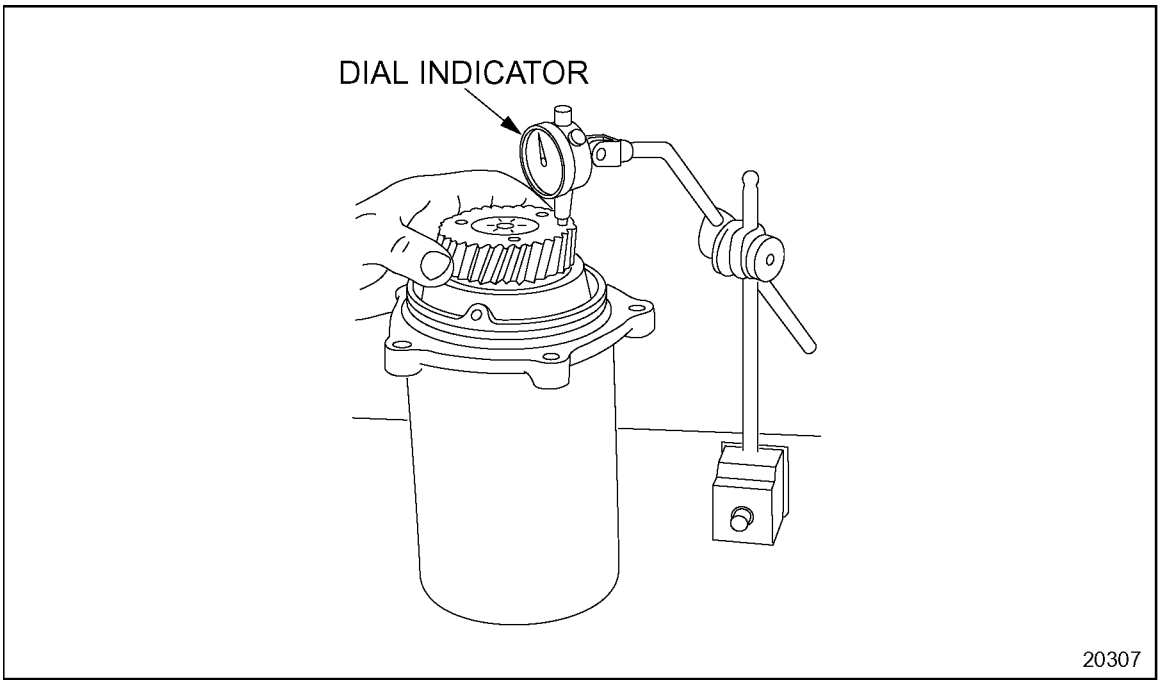

Figure 1-481 Accessory Drive Gear TIR Measurement

23. Assemble a dial indicator and magnetic base, so that the indicator stem rests on the face of the accessory drive gear just inboard of the drive gear teeth. See Figure 1-481.
24. Zero the dial indicator.
25. Rotate the drive gear two full rotations. See Figure 1-481. As the gear is rotated, the dial indicator needle may register both to the left and right of zero.
26. The total amount the dial indicator needle moves to the left and right of zero, added together, gives the total indicated run-out (TIR). The specified TIR is 0.04 mm (0.0015 in.).

 Copyright © 2004 DETROIT DIESEL CORPORATION

1.29.5 Installation of the Accessory Drive

Install the accessory drive as follows:

1. Install the O-ring seal in the groove on the drive housing.
2. Lubricate the O-ring with petroleum jelly.
3. Install the accessory drive housing to its original position in the gear case cover.

NOTE:
The word "UP" is cast into the drive housing.

4. Install the bolts that secure the accessory drive housing to the gear case cover and torque to 30-38 N·m (22-28 lb·ft) using the pattern shown. See Figure 1-482.

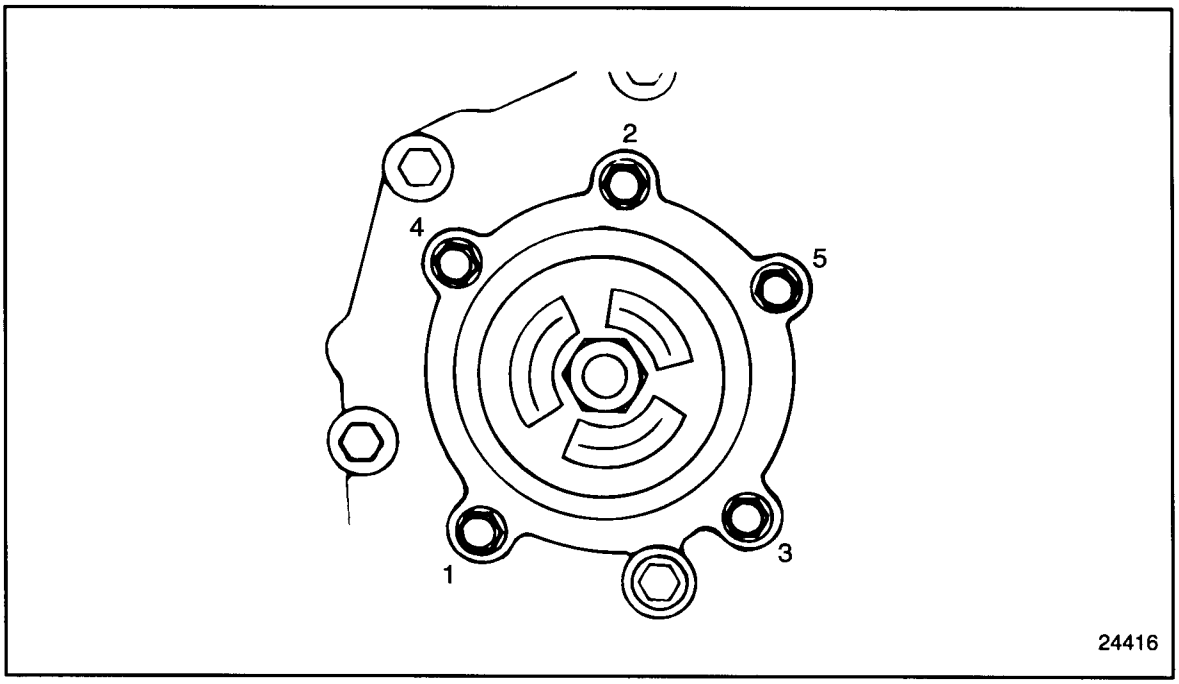

Figure 1-482 Accessory Drive Housing Bolt Torque Sequence

5. Check the bull gear-to-accessory drive gear backlash. Refer to section 1.22.2.1.
6. Adjust the alternator belts. Refer to section 13.13.10.
7. Tighten the alternator mounting bolts.
8. Install any other components removed for this procedure.
9. Refer to section 11.3 for verification of proper accessory drive installation.

(Rev. 2004) *All information subject to change without notice.*
6SE483 0401 Copyright © 2004 DETROIT DIESEL CORPORATION

1.30 JAKE BRAKE®

The engine brake has been designed to fit on the Series 60 engine with no additional valve cover spacers. There are three styles of valve covers for the Series 60 engine. On engines equipped with a two-piece aluminum valve cover, it is NOT necessary to remove the lower valve cover to install the engine brake. However, one style of upper valve cover may require modification at the breather housing location (inside) for engine brake clearance.

The model, part number and serial number are located on the nameplates at the top of each housing. See Figure 1-483.

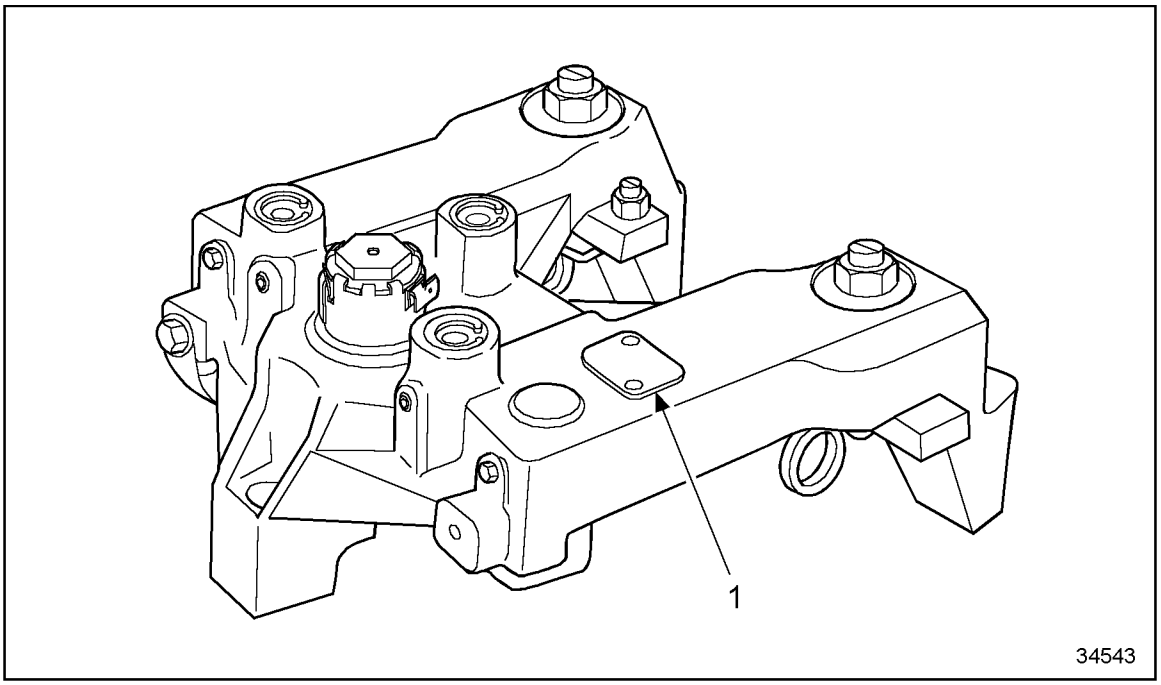

1. Identification Plate

Figure 1-483 Nameplate Location on Housing

NOTICE:
Only the specific brake model can be used with the engine model it was designed for. Also, the correct slave piston adjustment specification must be used. Failure to follow these instructions may result in serious engine or engine brake damage.

Listed in Table 1-11are the different Jake Brake® models used and the slave piston adjustment specification.

Model Number	Model Year	Engine Displacement	Engine Brake	Slave Piston Adjustment
6067WU40	Pre-1991	11.1L	760/760A	0.660 mm (0.026 in.)

 Copyright © 2004 DETROIT DIESEL CORPORATION

6067GU40	Pre-1991	12.7L	760/760A	0.508 mm (0.020 in.)
6067WU60	1991	11.1L	760/760A	0.660 mm (0.026 in.)
6067GU40	1991	12.7L	765	0.660 mm (0.026 in.)
6067GU28	1991	12.7L	765	0.660 mm (0.026 in.)
6067GU91	1991	12.7L	765	0.660 mm (0.026 in.)
6067WK60	1994	11.1L	760A	0.660 mm (0.026 in.)
6067GK60	1994	12.7L	765	0.660 mm (0.026 in.)
6067GK28	1994	12.7L	765	0.660 mm (0.026 in.)
6067EK60	1998	11.1L	760B	0.584 mm (0.023 in.)
6067PK60	1998	12.7L	765A	0.584 mm (0.023 in.)
6067TK60	1998	12.7L	765A	0.584 mm (0.023 in.)
6067TK45	1998	12.7L	765A	0.584 mm (0.023 in.)
6067MK60	1998	12.7L	770	0.584 mm (0.023 in.)
6067BK60	1998	12.7L	770	0.584 mm (0.023 in.)
6067HKXX	1998 (Non-Line Haul)	14L	770	0.584 mm (0.023 in.)
6067MK28, 6067MK45, 6067MK57, 6067MK60	2000	12.7L Standard	790	0.660 mm (0.026 in.)
6067BK28, 6067BK45, 6067BK57, 6067BK60	2000	12.7L Premium	790	0.660 mm (0.026 in.)
6067HK45, 6067HK60	2000	14L U.S.	790A	0.660 mm (0.026 in.)
6067WK28, 6067WK60	2000	11.1L	790B	0.660 mm (0.026 in.)
6067LK28, 6067LK45, 6067LK60	2000	11.1L	790B	0.660 mm (0.026 in.)
6063GK60, 6067GK28, 6067GK45, 6067GK91, 6067PK62, 6067TK28, 6067TK60, 6067TK62	2000	12.7L	790B	0.660 mm (0.026 in.)
6067HK62	2000	14L Australian	790C	0.660 mm (0.026 in.)
6067MK28, 6067MK45, 6067MK57, 6067MK60	2000	12.7L Standard	795	0.813 mm (0.032 in.)
6067BK28, 6067BK45, 6067BK57, 6067BK60	2000	12.7L Premium	795	0.813 mm (0.032 in.)
6067HK45, 6067HK60	2000	14L U.S.	795	0.813 mm (0.032 in.)
6067WK28, 6067WK60	2000	11.1L	795	0.813 mm (0.032 in.)
6067LK28, 6067LK45, 6067LK60	2000	11.1L	795	0.813 mm (0.032 in.)
6063GK60, 6067GK28, 6067GK45, 6067GK91, 6067PK62, 6067TK28, 6067TK60, 6067TK62	2000	12.7L	795	0.813 mm (0.032 in.)
6067HK62	2000	14L Australian	795	0.813 mm (0.032 in.)

(Rev. 2004) *All information subject to change without notice.*
6SE483 0401 Copyright © 2004 DETROIT DIESEL CORPORATION

All slave piston adjustments shown here are current as of the date of this manual and supersede all previous adjustments.

XXXX = Model numbers to be determined.

Table 1-11 Jake Brake® Model Information

NOTE:
All engines built after serial number 06R0004455 have the correct engine parts for engine brake installation. The model numbers have changed because of design changes in the engine brakes.

NOTE:
All Series 60 engines with serial numbers 06R0004455 or higher are Jake Brake® ready. Do not install a Jake Brake® on engines with lower serial numbers.

Effective August 10, 2000, Model 795 Jake Brakes are used on all Series 60 engines requiring an engine brake.

Former Jake Brake® production models for the Series 60 engine were the 760A (which replaced model 760), 760B, 765, 765A, 770 and 790.

Detroit Diesel engine model Nos. 6067GU28 and 6067GK28 are for bus/coach applications. Due to interference fits on some coach chassis, a two-housing Jake Brake® kit may be required. Contact your Detroit Diesel Distributor for information on these kits.

Jake Brake® is a registered trademark of Jacobs Vehicle Systems. J-Lash™ is a trademark of Jacobs Vehicle Systems.

 Copyright © 2004 DETROIT DIESEL CORPORATION

Energizing the engine brake effectively converts a power-producing diesel engine into a power-absorbing air compressor. This is accomplished through motion transfer using a master-slave piston arrangement which opens cylinder exhaust valves near the top of the normal compression stroke, releasing the compressed cylinder charge to exhaust. See Figure 1-484.

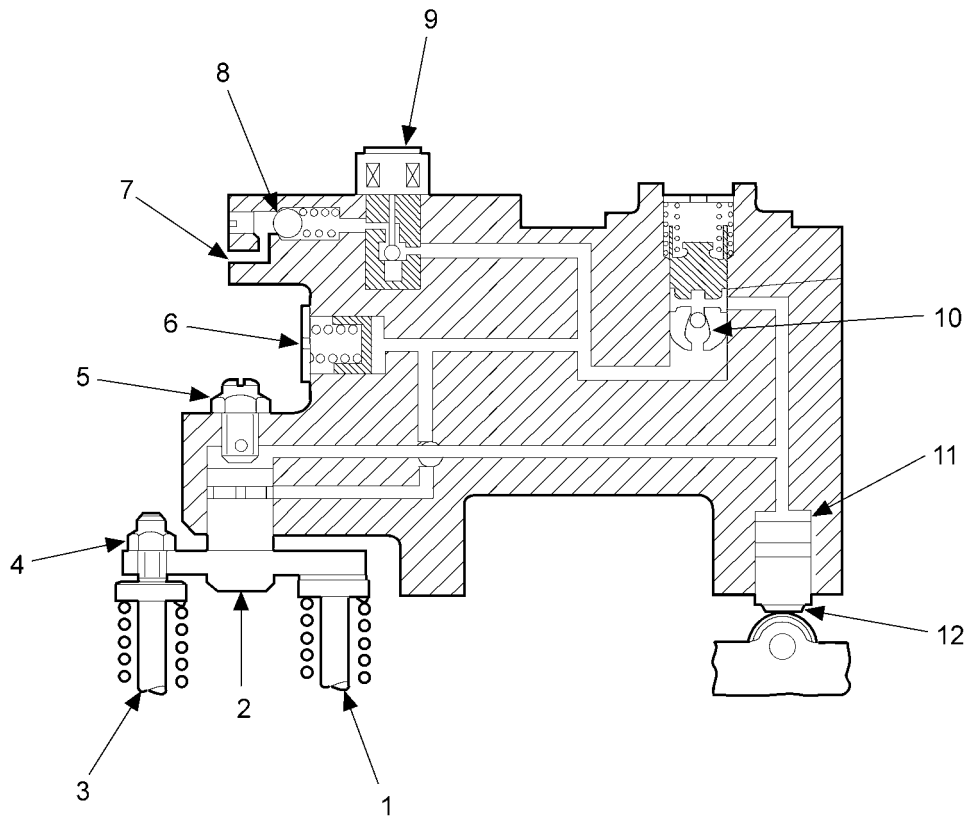

1. Exhaust Valve
2. Slave Piston Assembly
3. Exhaust Valve
4. Leveling Screw
5. Slave Piston Adjusting Screw
6. Accumulator
7. Oil In
8. Check Valve (Model 760)
9. Solenoid Valve
10. Control Valve
11. Master Piston
12. Injector Pin and Roller

Figure 1-484 Jake Brake® Schematic

(Rev. 2004) *All information subject to change without notice.*
6SE483 0401 Copyright © 2004 DETROIT DIESEL CORPORATION

The blowdown of compressed air to atmospheric pressure prevents the return of energy to the engine piston on the expansion stroke, the effect being a net energy loss, since the work done in compressing the cylinder charge is not returned during the expansion process.

Exhaust blowdown occurs as the energized solenoid valve permits engine lube oil to flow under pressure through the control valve to both the master piston and the slave piston. See Figure 1-484.

Oil pressure causes the master piston to move down, coming to rest on the injector rocker arm roller.

The injector rocker arm begins its travel as in the normal injection cycle, moving the master piston upward and directing high-pressure oil to the slave piston. The ball check valve in the control valve traps high-pressure oil in the master-slave piston system.

High pressure oil causes the slave piston to move down, momentarily opening the exhaust valves, while the engine piston is near its top-dead-center position, releasing compressed cylinder air to the exhaust manifold.

At the bottom of its stroke, the slave piston separates from the valve in the slave piston adjusting screw, allowing high pressure oil to flow into the accumulator. This reduces the pressure in the high pressure circuit, permitting the slave piston to retract and the exhaust valves to close in preparation for the normal exhaust valve cycle. The oil pressure reserved in the accumulator ensures that the hydraulic circuit is fully charged for the next cycle. Compressed air escapes to the atmosphere, completing a compression braking cycle.

The Jake Brake® is electronically controlled. Jake Brake® control system wiring will vary depending on the vehicle manufacturer. For a general overview of the Jake Brake®, see Figure 1-485 and see Figure 1-486.

 Copyright © 2004 DETROIT DIESEL CORPORATION

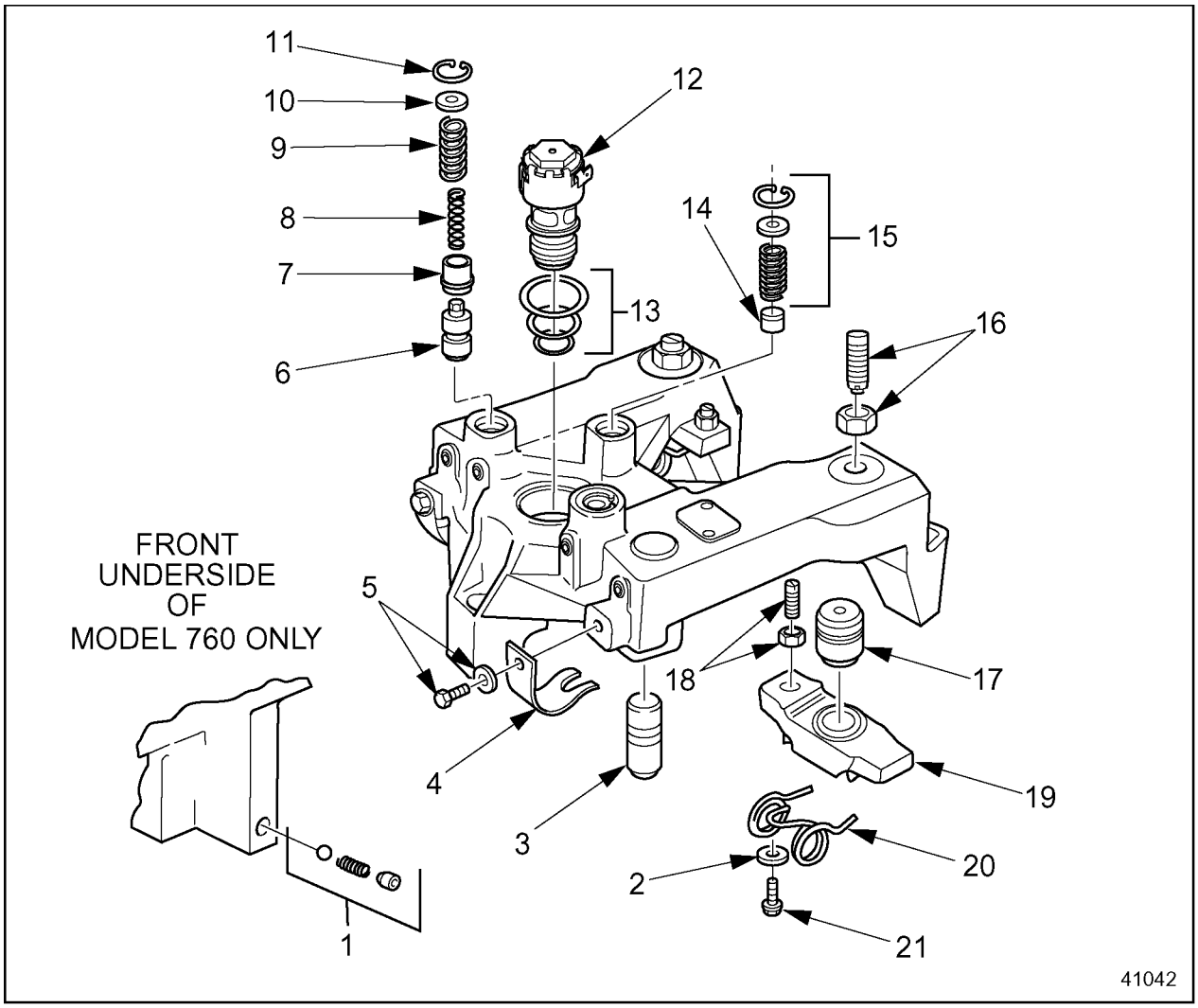

1. Ball Check Valve (Model 760 Only)
2. Washer
3. Master Piston
4. Master Piston Spring
5. Washer and Screw Assembly
6. Control Valve
7. Collar
8. Control Valve Spring
9. Collar Spring
10. Washer
11. Snap Ring Retainer
12. Solenoid Valve
13. Seal Rings
14. Accumulator Piston
15. Power Lash Assembly
16. Slave Piston Adjusting Screw
17. Slave Piston
18. Slave Piston Leveling Screw
19. Bridge
20. Return Spring
21. Screw

Figure 1-485 Typical Model 760, 765, or 770 Jake Brake® Assembly

(Rev. 2004) *All information subject to change without notice.*
6SE483 0401 Copyright © 2004 DETROIT DIESEL CORPORATION

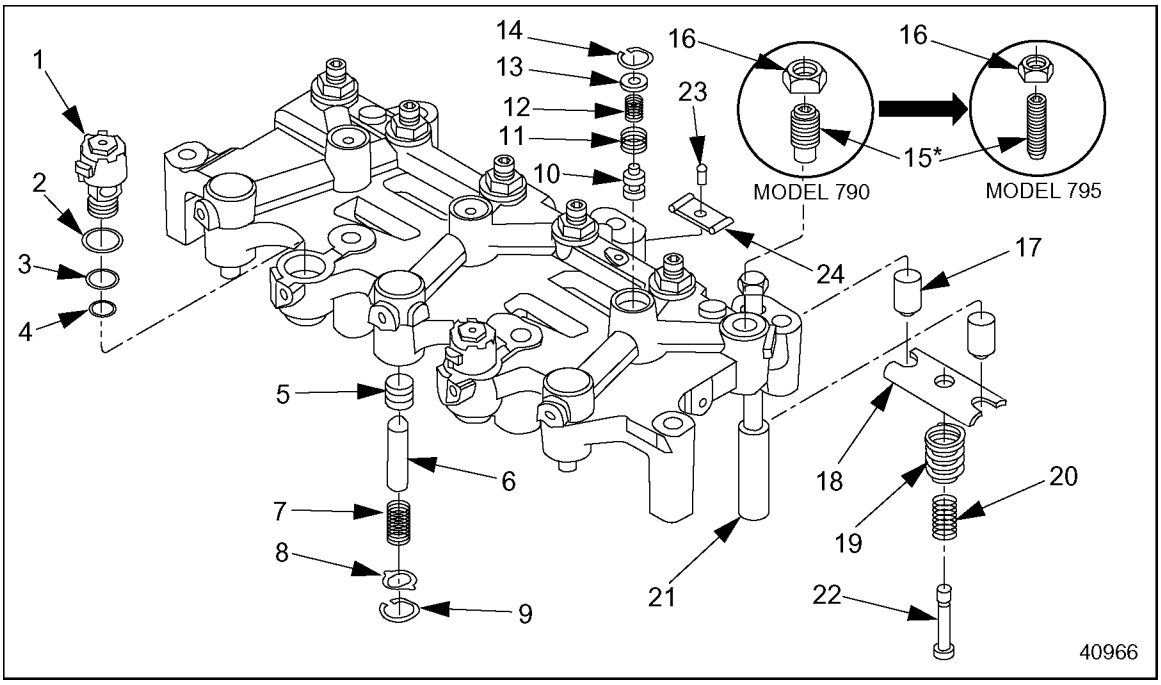

1. Solenoid Valve
2. Solenoid Upper Seal Ring
3. Solenoid Center Seal Ring
4. Solenoid Lower Seal Ring
5. Master Piston
6. Master Piston Pushrod
7. Master Piston Spring
8. Master Piston Retainer
9. Master Piston Retaining Ring
10. Control Valve
11. Outer Control Valve Spring
12. Inner Control Valve Spring
13. Control Valve Cover
14. Retaining Ring
15. Adjusting Screw*
16. Locknut
17. Slave Piston
18. Slave Piston Bridge
19. Outer Slave Piston Spring
20. Inner Slave Piston Spring
21. Spacer Tube
22. Shoulder Bolt
23. Drive Screw
24. Wire Harness Clip

*Note that Model 790 Jake Brake® uses a J-Lash™ assembly. Model 795 Jake Brake® uses a solid screw.

Figure 1-486 Typical Model 790/795 Jake Brake® Assembly

NOTICE:
This application and adjustment information must be strictly followed. Failure to follow these instructions may result in serious engine or engine brake damage.

 Copyright © 2004 DETROIT DIESEL CORPORATION

1.30.1 Repair or Replacement of Jake Brake®

To determine if repair is possible or replacement is necessary, perform the following procedure. See Figure 1-487.

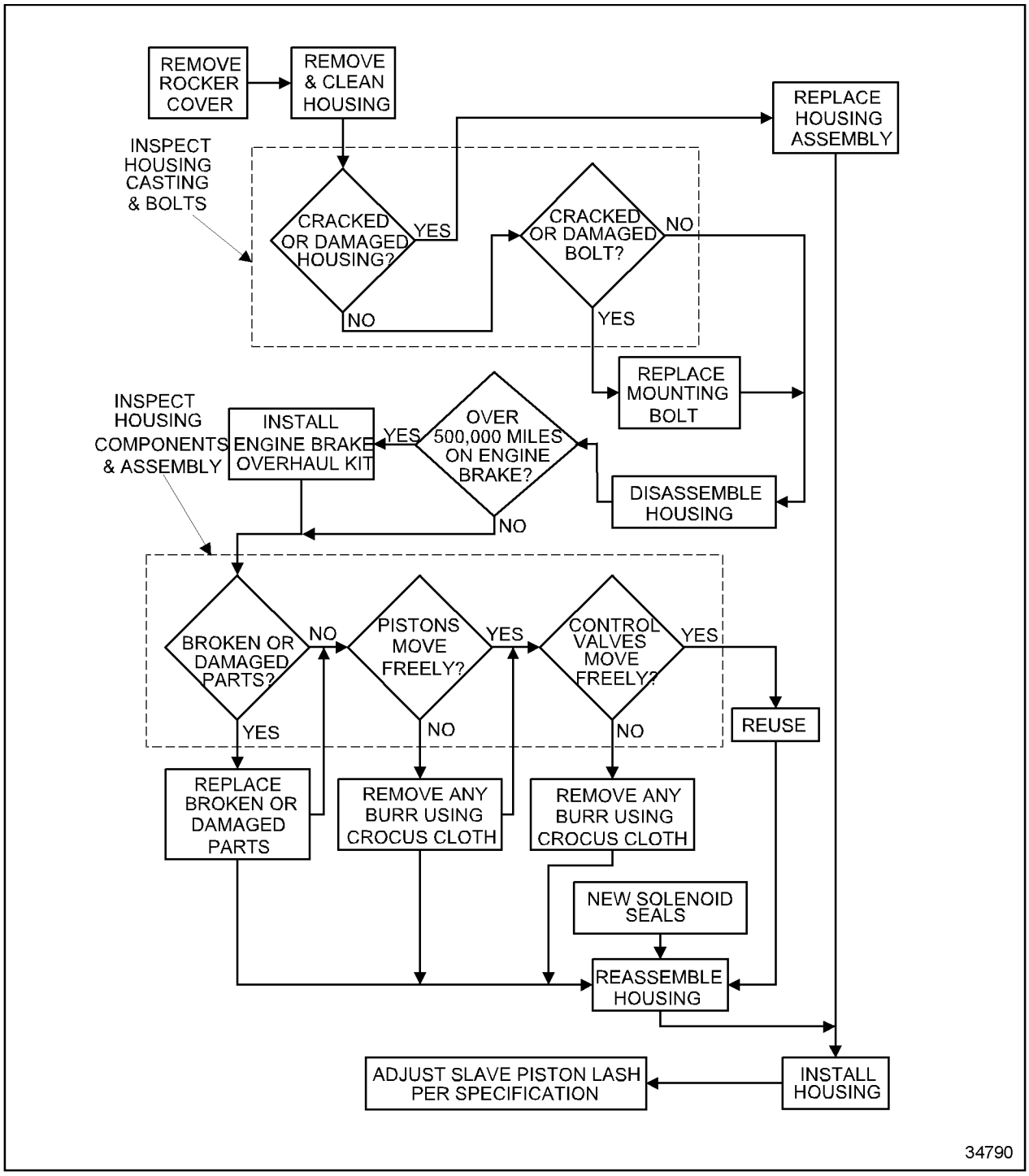

Figure 1-487 Jake Brake® Repair or Replacement Flowchart

(Rev. 2004) *All information subject to change without notice.*
6SE483 0401 Copyright © 2004 DETROIT DIESEL CORPORATION

1.30.2 Removal of Model 760, 765, or 770 Jake Brake®

Remove the model 760, 765, or 770 Jake Brake® as follows:

NOTE:
The following procedures apply to Model 760, 765, and 777 Jake Brake®. For Model 790/795 Jake Brake® removal procedures, refer to section 1.30.6.

CAUTION:

To avoid injury, never remove any engine brake component with engine running.

1. Disconnect starting power for engine. Refer to OEM guidelines.
2. Remove the engine rocker cover. Refer to section 1.6.2for one-piece, refer to section 1.6.3 for two-piece and refer to section 1.6.5 for three-piece.

NOTE:
If the engine is equipped with an aluminum two-piece valve cover, remove only the upper valve cover when installing the engine brake.

3. Note the location of the rocker arm shaft, the exhaust valve rocker arm, the fuel injector rocker arm, and the intake valve rocker arm.

 Copyright © 2004 DETROIT DIESEL CORPORATION

4. Disconnect the solenoid wiring harness connectors from the engine brake solenoids. See Figure 1-488.

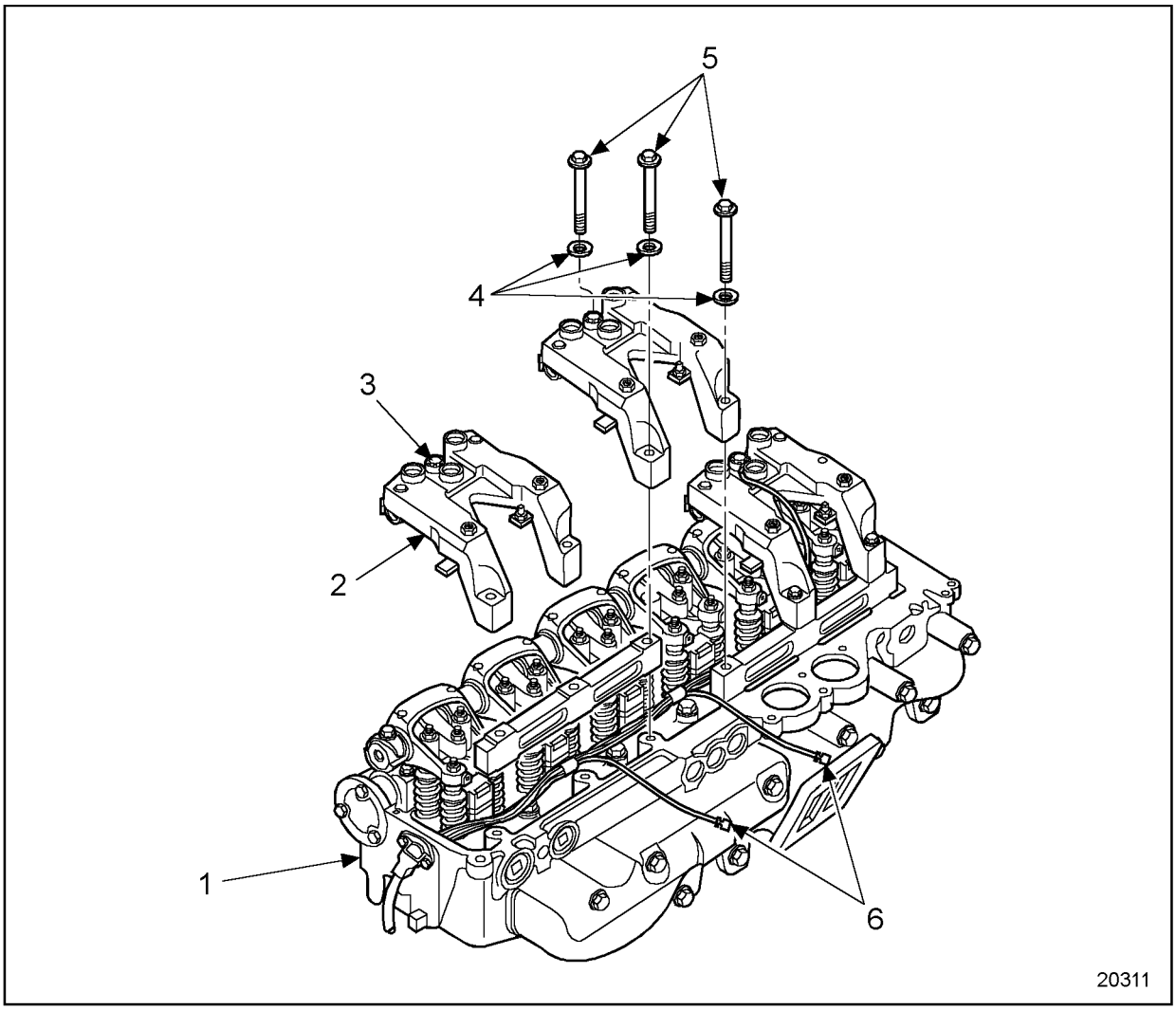

1. Cylinder Head
2. Jake Brake® Assembly
3. Solenoid
4. Washers (3 each)
5. Capscrews (3 each)
6. Engine Brake Harness

Figure 1-488 Jake Brake® Assembly

5. Remove the nine capscrews and washers that secure the engine brake assemblies to the cylinder head. See Figure 1-488.

NOTE:
Only the Model 760 Jake Brake® uses two different length capscrews. Six bolts, 120 mm (4.72 in.) long, are used on the exhaust side of the engine. Three bolts, 110 mm (4.33 in.) long, are used on the intake side of the engine. These bolts must be reinstalled in their correct positions.

(Rev. 2004) *All information subject to change without notice.*
6SE483 0401 Copyright © 2004 DETROIT DIESEL CORPORATION

6. Remove the engine brake assemblies and the spacer bar.

1.30.3 Disassembly of Model 760, 765, or 770 Jake Brake®

Remove the control valve as follows:

⚠ CAUTION:

To avoid injury from flying parts when working with components under spring tension, wear adequate eye protection (face shield or safety goggles).

1. Press down on control valve washer using an appropriate diameter rod to relieve spring pressure. See Figure 1-489.

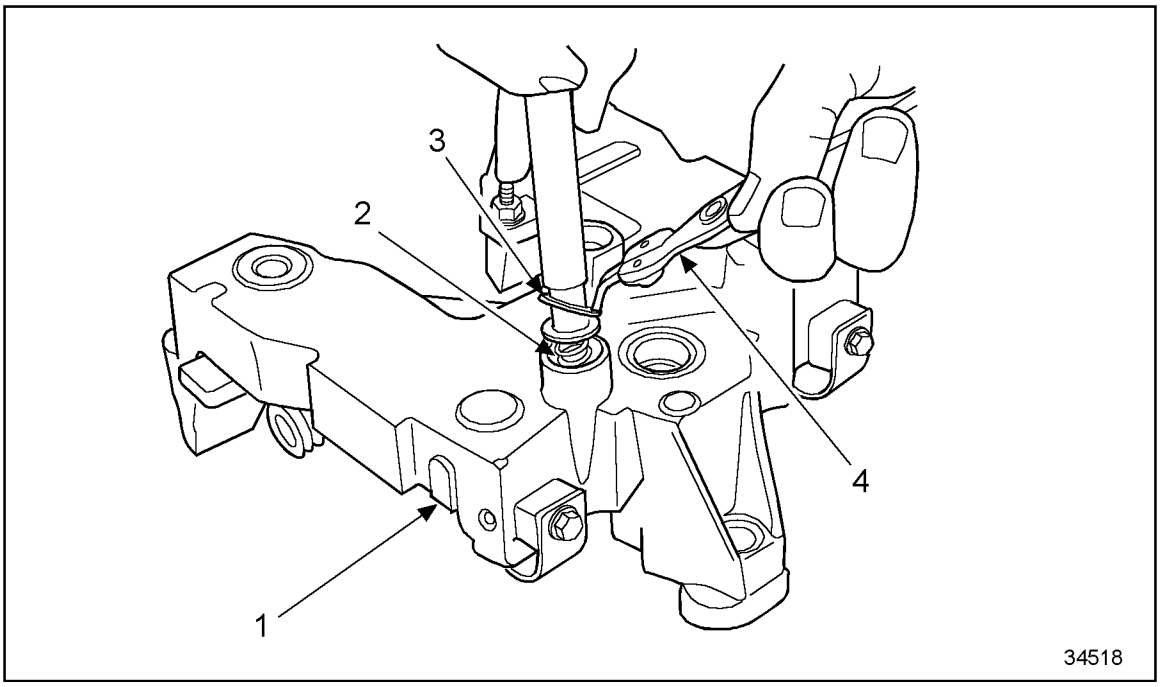

1. Jake Brake® Assembly
2. Spring
3. Snap Ring Retainer
4. Snap Ring Pliers

Figure 1-489 Relieving Spring Pressure

2. Using retaining ring pliers, remove retaining ring.

 Copyright © 2004 DETROIT DIESEL CORPORATION

3. Slowly remove cover until spring pressure ceases, then remove the two control valve springs and collar. See Figure 1-490.

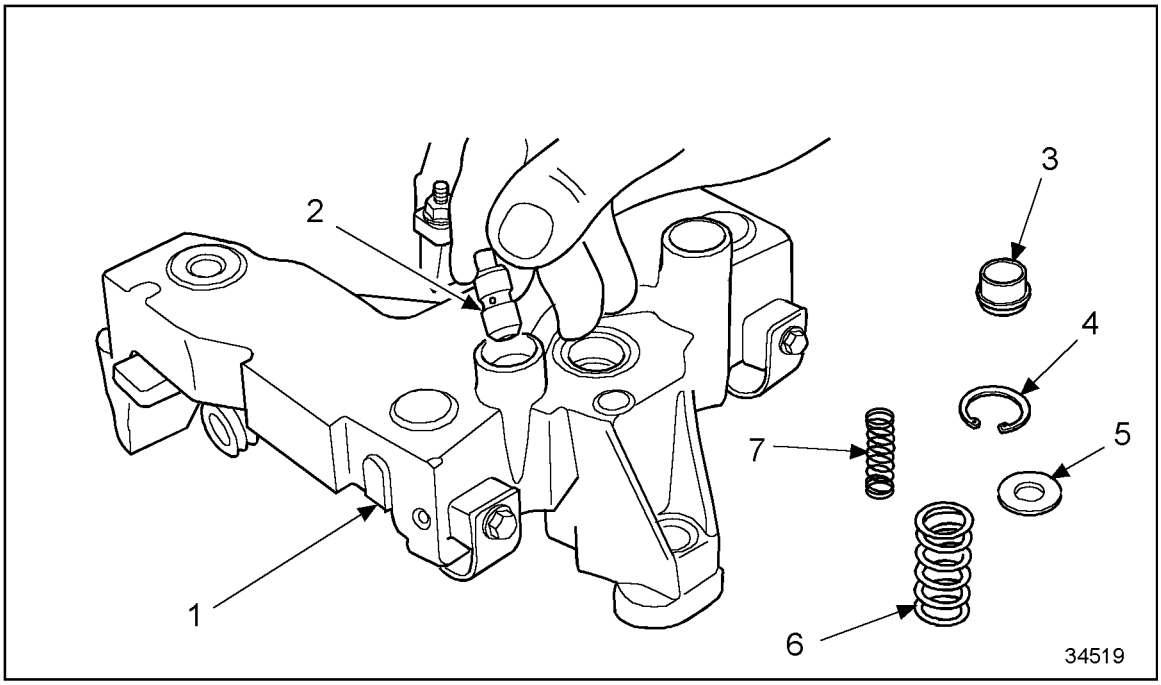

1. Jake Brake® Assembly
2. Control Valve
3. Collar
4. Snap Ring Retainer
5. Washer
6. Collar Spring
7. Control Valve Spring

Figure 1-490 Removing Control Valve Springs and Collar

4. Using needle-nose pliers, reach into the bore and grasp the stem of the control valve. Remove control valve.

Remove the slave piston adjusting screw as follows:

1. Loosen slave piston adjusting screw locknut.

(Rev. 2004) *All information subject to change without notice.*
6SE483 0401 Copyright © 2004 DETROIT DIESEL CORPORATION

2. Remove adjusting screw from housing. See Figure 1-491.

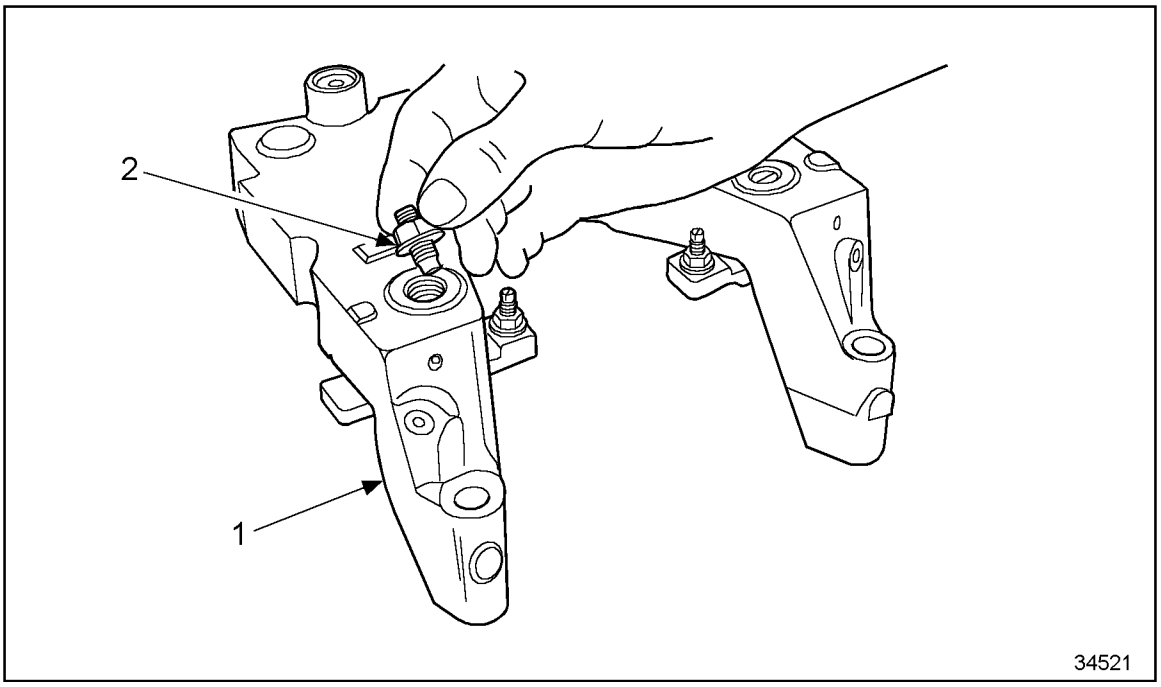

1. Jake Brake® Assembly
2. Slave Piston Adjusting Screw

Figure 1-491 Removing Slave Piston Adjusting Screw

Remove the solenoid valve as follows:

NOTICE:
To avoid possible engine damage, do not disassemble or tamper with the solenoid valve.

1. Disconnect solenoid valve harness.
2. Using a 7/8 in. socket and extension for former solenoids or a 3/4 in., 6 point socket and extension for current solenoids, unscrew solenoid valve.

 Copyright © 2004 DETROIT DIESEL CORPORATION

3. Remove and discard the three rubber seal rings. See Figure 1-492.

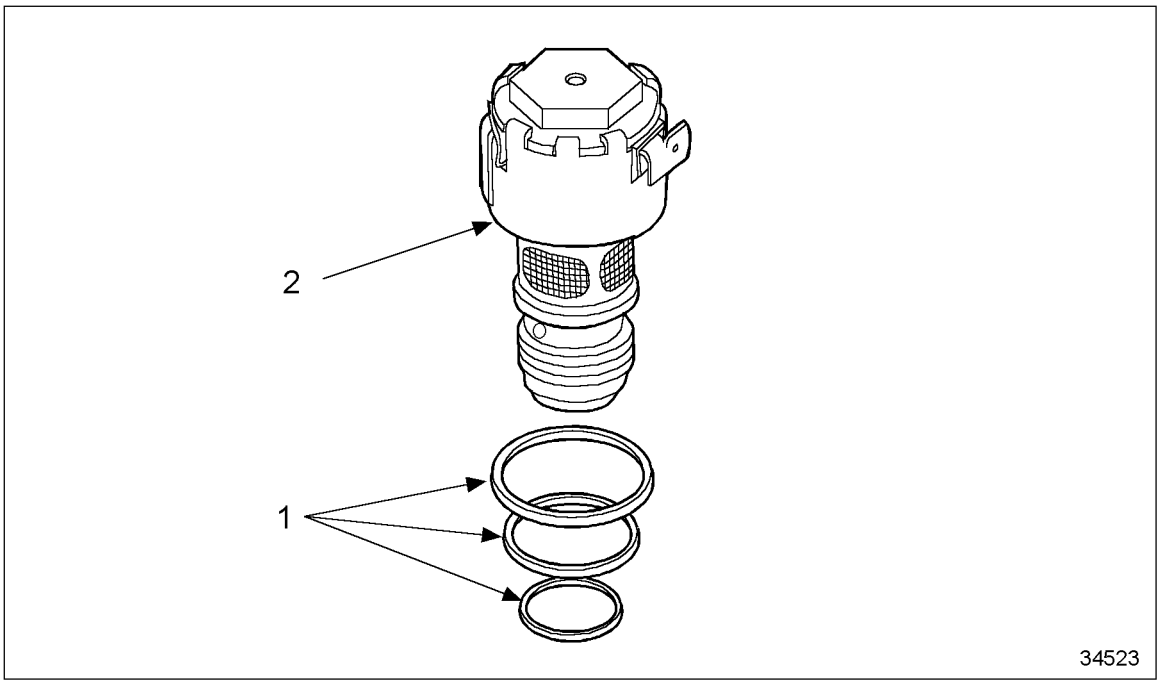

1. Seal Rings (3)
2. Solenoid

Figure 1-492 Removing Rubber Seal Rings

4. If the lower ring stays in the bottom of the housing bore, remove with a piece of wire.

Remove the accumulator as follows:

(Rev. 2004) *All information subject to change without notice.*
6SE483 0401 Copyright © 2004 DETROIT DIESEL CORPORATION

⚠ CAUTION:

To avoid injury from flying parts when working with components under spring tension, wear adequate eye protection (face shield or safety goggles).

1. Push down on the accumulator cover using the appropriate diameter rod, and remove the retaining ring. See Figure 1-493.

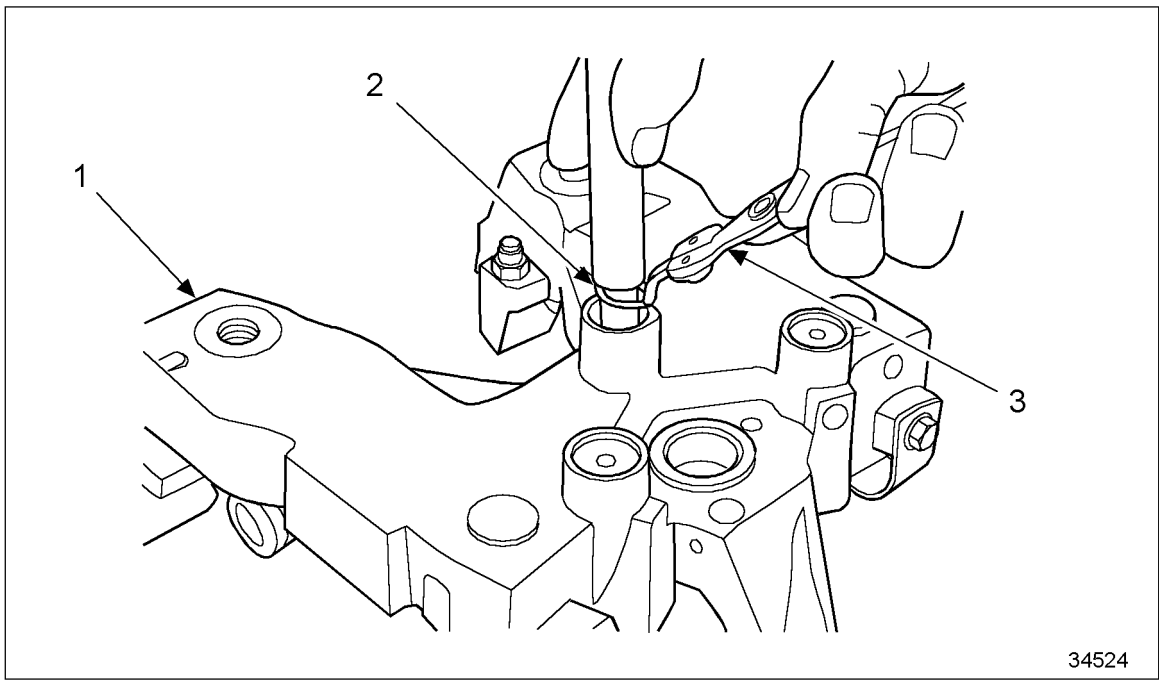

1. Jake Brake® Assembly
2. Retaining Ring
3. Retaining Ring Pliers

Figure 1-493 Removing Retaining Ring

2. Relieve pressure on the accumulator cover.
3. Remove the cover and spring.

 Copyright © 2004 DETROIT DIESEL CORPORATION

4. Use a magnet to remove the piston from the accumulator bore. See Figure 1-494.

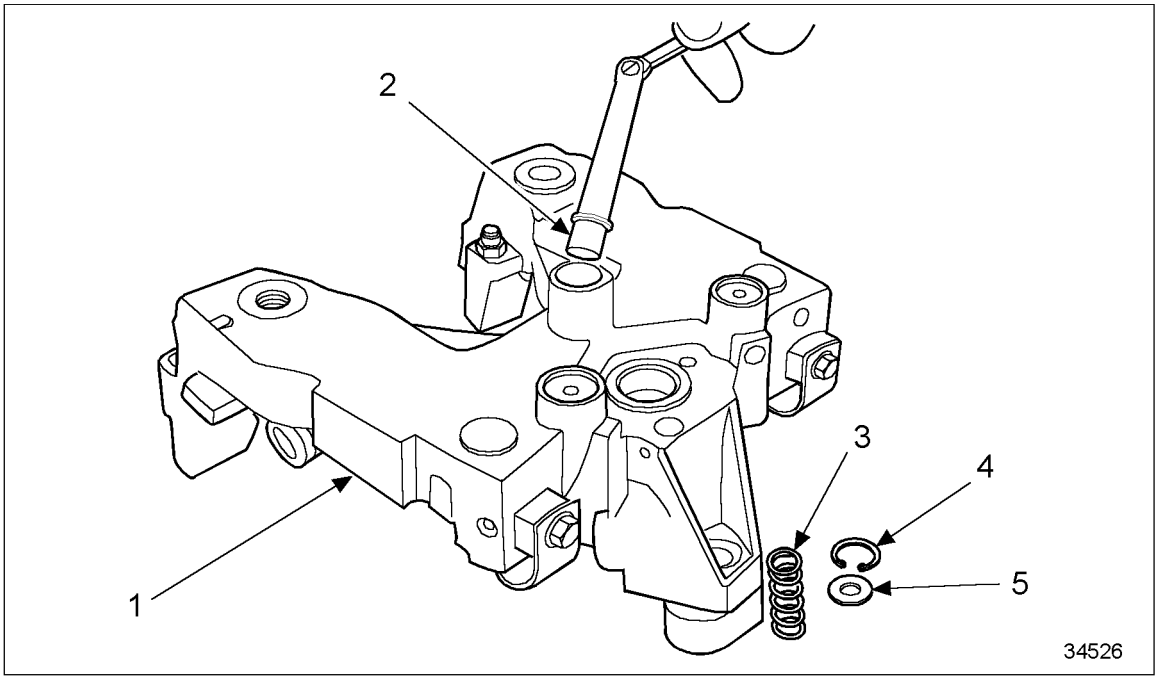

1. Jake Brake® Assembly
2. Piston
3. Spring
4. Retaining Ring
5. Washer

Figure 1-494 Removing Piston from Accumulator Bore with Magnet

Remove the master piston as follows:

1. Remove the screw, washer, and master piston spring from the housing.

(Rev. 2004) *All information subject to change without notice.*
6SE483 0401 Copyright © 2004 DETROIT DIESEL CORPORATION

2. Remove the master piston. See Figure 1-495.

NOTE:
Use needle-nose pliers, if necessary.

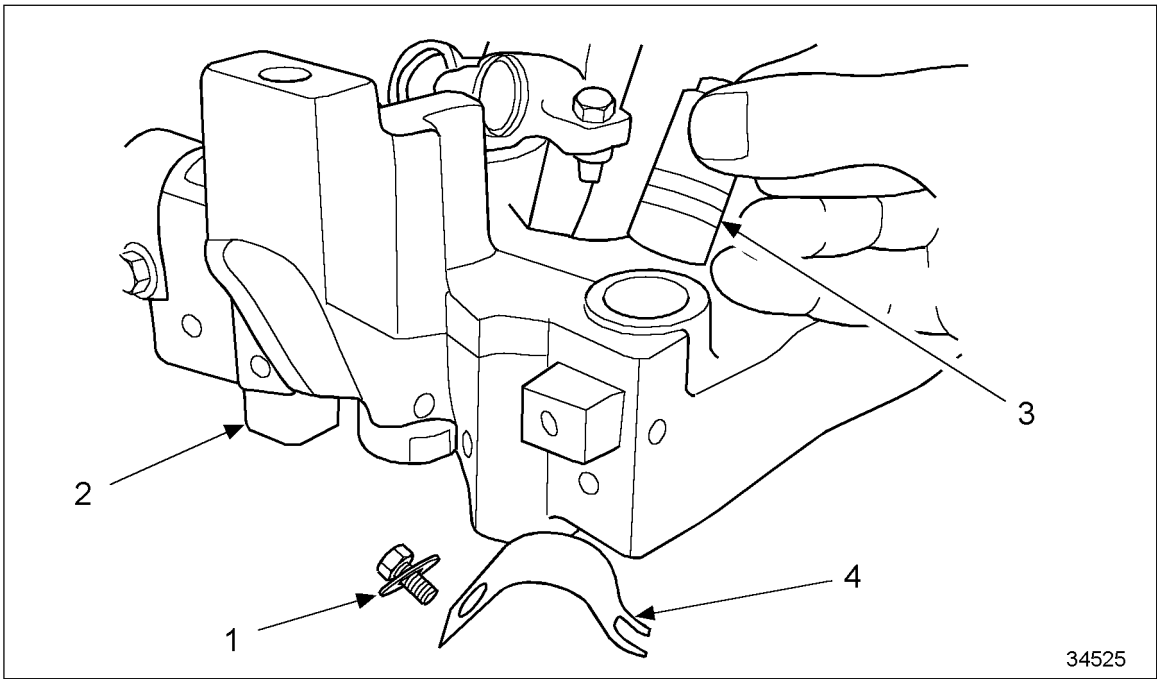

1. Washer and Screw Assembly
2. Jake Brake® Assembly
3. Master Piston
4. Master Piston Spring

Figure 1-495 Removing the Master Piston

On Model 760 only, remove the ball check valve as follows:

1. Remove the plug.
2. Remove the ball check valve and spring.

Remove the slave piston as follows:

1. Remove the screw and washer that retains the slave piston return spring.

 Copyright © 2004 DETROIT DIESEL CORPORATION

2. Remove the bridge and the slave piston. See Figure 1-496.

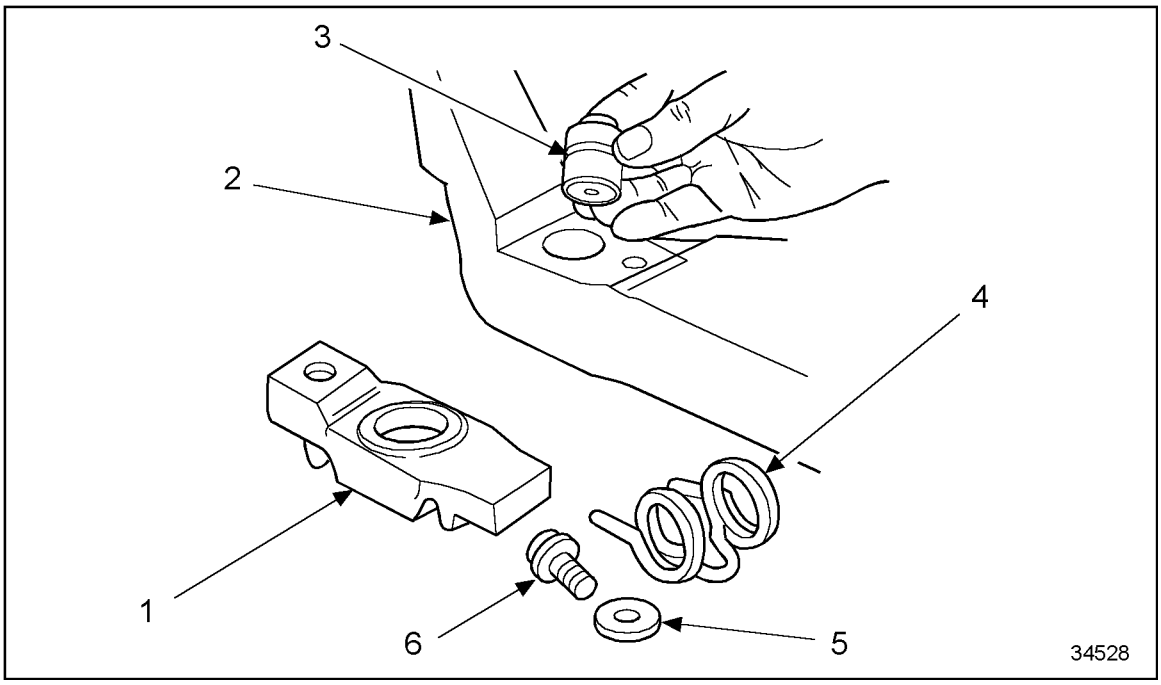

1. Slave Piston Bridge
2. Jake Brake® Housing
3. Slave Piston
4. Return Spring
5. Washer
6. Screw

Figure 1-496 Removing Bridge and Slave Piston

(Rev. 2004) *All information subject to change without notice.*
6SE483 0401 Copyright © 2004 DETROIT DIESEL CORPORATION

3. Loosen the leveling screw locknut and remove the leveling screw from the bridge. See Figure 1-497.

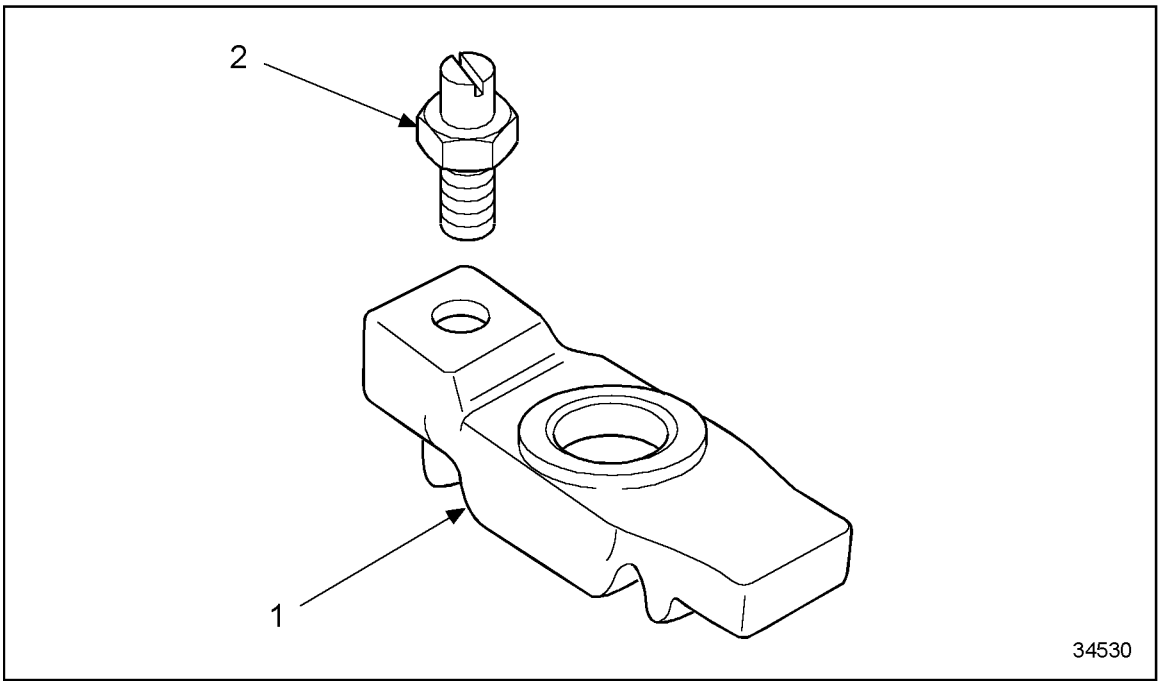

1. Slave Piston Bridge
2. Slave Piston Leveling Screw

Figure 1-497 Removing the Leveling Screw from the Bridge

The injector rocker arm contains a pin and roller for actuating the engine brake master piston. If excessive wear or damage to the roller is present, replace the rocker arm assembly. Refer to section 1.6.2.

1.30.3.1 Cleaning of Model 760, 765, or 770 Jake Brake®

Clean the Jake Brake® as follows:

NOTE:
Use an OSHA-approved cleaning solvent when washing parts. Be sure to coat parts with clean engine oil when reinstalling them.

1. Wash the control valves with approved cleaning solvent.
2. Push a wire through the hole in the base of the valve to the distance required to ensure that the ball check is free.

NOTE:
The ball should lift with light pressure on the wire.

 Copyright © 2004 DETROIT DIESEL CORPORATION

CAUTION:

To avoid injury from flying debris when using compressed air, wear adequate eye protection (face shield or safety goggles) and do not exceed 40 psi (276 kPa) air pressure.

3. Dry the valve with compressed air, and wipe clean with a paper towel.
4. Thoroughly clean the control valve bore in the housing using clean paper towels.
5. Clean slave piston adjusting screw in an approved cleaning solvent.
6. Clean out the solenoid valve bore in the housing.

NOTICE:

Use clean paper towels to clean the solenoid valve bore. Never use rags, as they may leave lint and residue which can plug the oil passageways, causing Jake Brake® malfunction.

7. Clean the master piston in approved cleaning solvent.

1.30.3.2 Inspection of Model 760, 765, or 770 Jake Brake®

The Jacobs engine brake is typically a trouble-free device. However, inspections are necessary and some maintenance is required. Use the following procedures to keep the engine brake in top condition.

Inspect the Jake Brake® as follows:

1. Inspect slave piston adjusting screw for protrusion, spring pressure and freedom of movement.

NOTE:
The plunger should protrude from the bottom of the screw, have light spring pressure apparent when depressed, and move freely. Be sure the retaining ring is fully engaged in its groove (groove is located on the bottom of the reset screw and top of the POWER-LASH assembly).

   [a] If the plunger does not protrude, the spring does not have light pressure or does not move freely, replace the entire screw assembly. Refer to section 1.30.4

   [b] If the slave piston adjusting screw meets specifications, continue with inspection.

2. Inspect the accumulator for wear or damage.

   [a] If worn or damaged, replace the accumulator. Refer to section 1.30.4.

   [b] If accumulator is not worn or damaged, continue with inspection.

(Rev. 2004) *All information subject to change without notice.*
6SE483 0401 Copyright © 2004 DETROIT DIESEL CORPORATION

3. Inspect the master piston bore for wear or damage.

NOTE:
Some wear marks are permissible.

[a] If worn or damaged, replace the master piston. Refer to section 1.30.4.

[b] If not worn or damaged, continue with inspection.

4. Apply clean lube oil to the piston, and insert into bore.

NOTE:
Master piston should move in and out freely with no binding.

[a] If binding occurs, replace master piston and/or housing. Refer to section 1.30.4.

[b] If no binding occurs, continue with inspection.

5. Inspect master piston spring for relaxation.

NOTE:
The spring should hold the master piston completely in the housing.

[a] If relaxed, replace the spring. Refer to section 1.30.4.

[b] If spring holds tightly, continue with inspection.

6. Inspect the ball check valve (Model 760 only) for wear or damage.

[a] If worn or damaged, replace ball check valve. Refer to section 1.30.4.

[b] If not worn or damaged, proceed with inspection.

7. Inspect slave piston components for excessive wear or damage.

[a] If worn or damaged, replace slave piston component.

[b] If not worn or damaged, proceed with inspection.

1.30.3.3 Inspection of Control Valve

Inspect the control valve as follows:

1. Dip the control valves in clean lube oil.
2. Holding the control valve by the stem, let it drop into the bore.

[a] If binding occurs or if the ball sticks in the valve, replace the control valve. Refer to section 1.30.4.

[b] If no binding occurs and the ball does not stick in the control valve, assemble the Jake Brake®. Refer to section 1.30.4.

1.30.4 Assembly of Model 760, 765, or 770 Jake Brake®

Install the control valve as follows:

 Copyright © 2004 DETROIT DIESEL CORPORATION

1. Slip the control valve into the bore. See Figure 1-498.

NOTE:
Make sure the control valve collar is installed with the longer sleeve area facing up. If the collar is installed upside down, the engine brake cylinder will not operate.

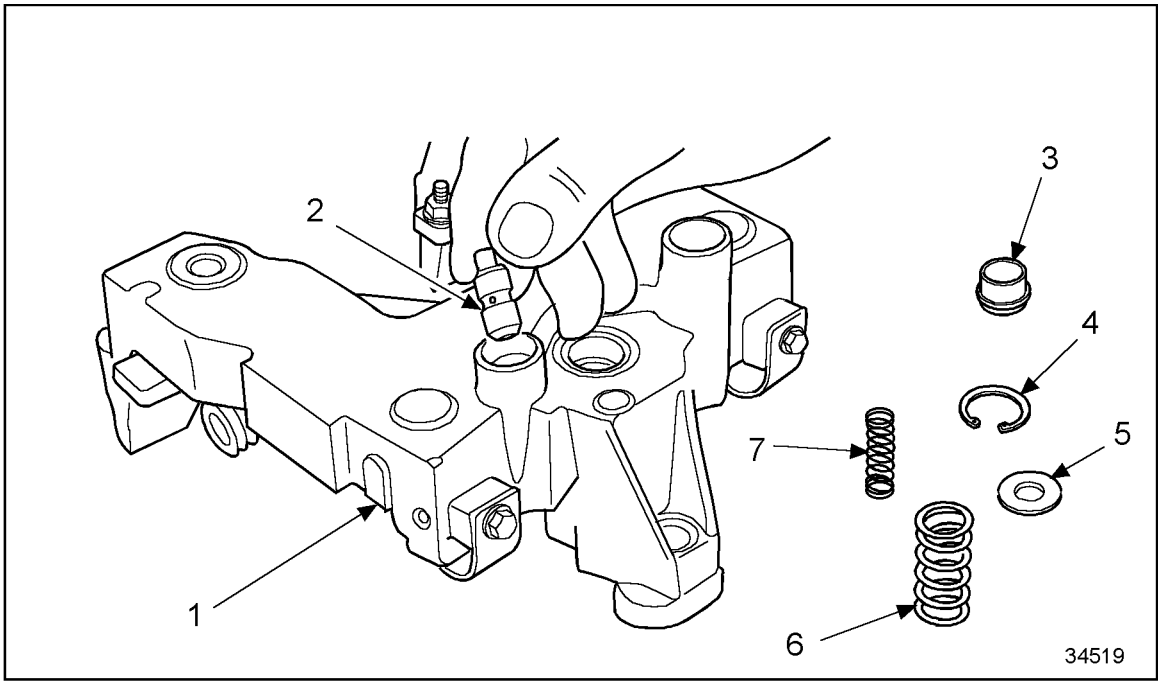

1. Jake Brake® Assembly
2. Control Valve
3. Collar
4. Snap Ring Retainer
5. Washer
6. Collar Spring
7. Control Valve Spring

Figure 1-498 Installing the Control Valve

2. Install the control valve collar and two springs.

NOTE:
Ensure the collar is installed with the longer sleeve area facing up. If the collar is installed upside down, the engine brake cylinder will not operate.

3. Press the cover (washer) into place.
4. While holding the cover tightly in place, install the retaining ring.
5. Rotate retaining ring ears 90 degrees to assure ring is seated in groove.

Install the slave piston adjusting screw as follows:

(Rev. 2004) *All information subject to change without notice.*
6SE483 0401 Copyright © 2004 DETROIT DIESEL CORPORATION

1. Place the screw in the housing. See Figure 1-499.

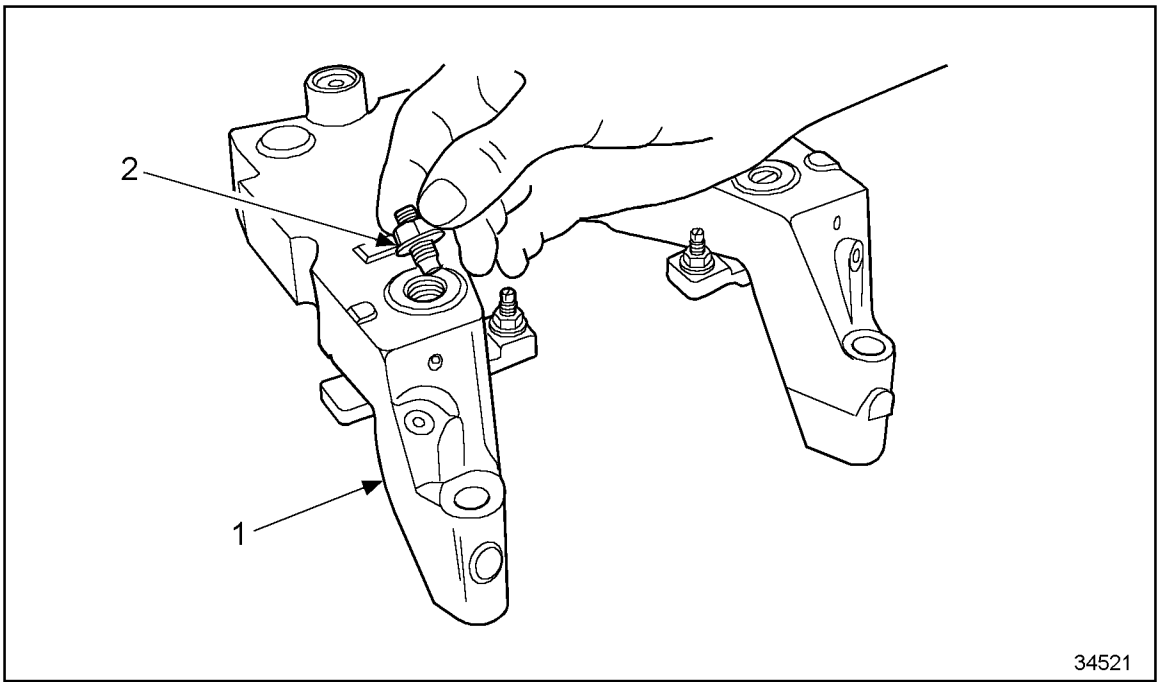

1. Jake Brake® Assembly
2. Slave Piston Adjusting Screw

Figure 1-499 Installing the Slave Piston Adjusting Screw

2. Torque the slave piston adjusting screw locknut to 35 N·m (25 lb·ft).

Install the solenoid valve as follows:

NOTE:
As of October 19, 1997, former solenoids have been replaced with the current improved solenoids. The current solenoids have an increased installation torque and improved durability. The current solenoid is interchangeable with the former.

1. Coat new solenoid valve seal rings with clean lube oil.

NOTE:
Use current upper seals when installing current solenoids. New seals are identified with yellow stripes.

 Copyright © 2004 DETROIT DIESEL CORPORATION

2. Install the upper and center seal rings on the solenoid valve body and the lower seal ring into the bottom of the bore in the housing. See Figure 1-500.

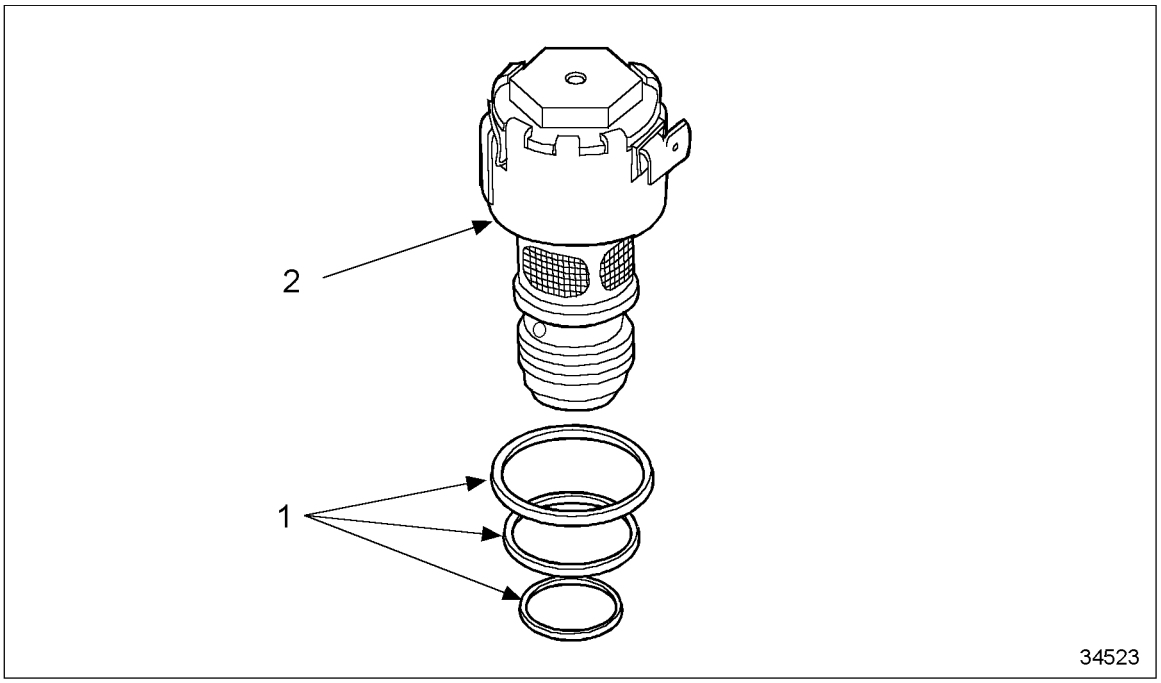

1. Seal Rings (3)
2. Solenoid

Figure 1-500 Installation of Solenoid Valve Seal Rings

3. Make sure the seals are seated properly.
4. Using a 7/8 in. socket and extension for former solenoids or a 3/4 in., 6 point socket and extension for current solenoids, carefully screw the solenoid valve into the housing without unseating the seals.
5. Torque the former solenoid to 12.4 N·m (9 lb·ft). Torque the current solenoid to 20 N·m (15 lb·ft.)

NOTE:
Be careful not to twist the seals while installing.

Install the accumulator as follows:

1. Place the piston into the accumulator bore.
2. Insert the spring, and install the cover.
3. Push down the accumulator cover, and insert retaining ring.

Install the master piston as follows:

1. Apply clean lube oil to the piston.

(Rev. 2004) *All information subject to change without notice.*
6SE483 0401 Copyright © 2004 DETROIT DIESEL CORPORATION

2. Insert master piston into bore. See Figure 1-501.

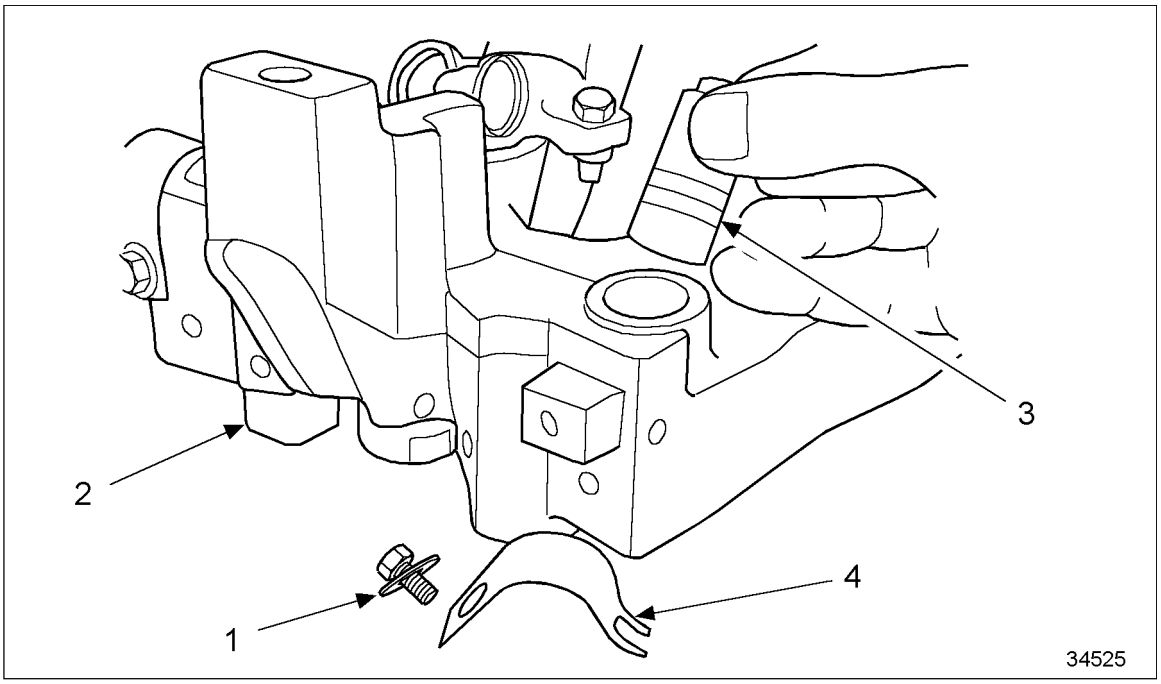

1. Washer and Screw Assembly
2. Jake Brake® Assembly
3. Master Piston
4. Master Piston Spring

Figure 1-501 Inserting Master Piston into Bore

3. Install spring, washer, and screw.

NOTE:
Make sure spring legs are centered around master piston boss.

4. Torque screw to 10 N·m (7.4 lb·ft).

On model 760 only, install the ball check valve as follows:

 Copyright © 2004 DETROIT DIESEL CORPORATION

1. Install the ball check valve and spring. See Figure 1-502.

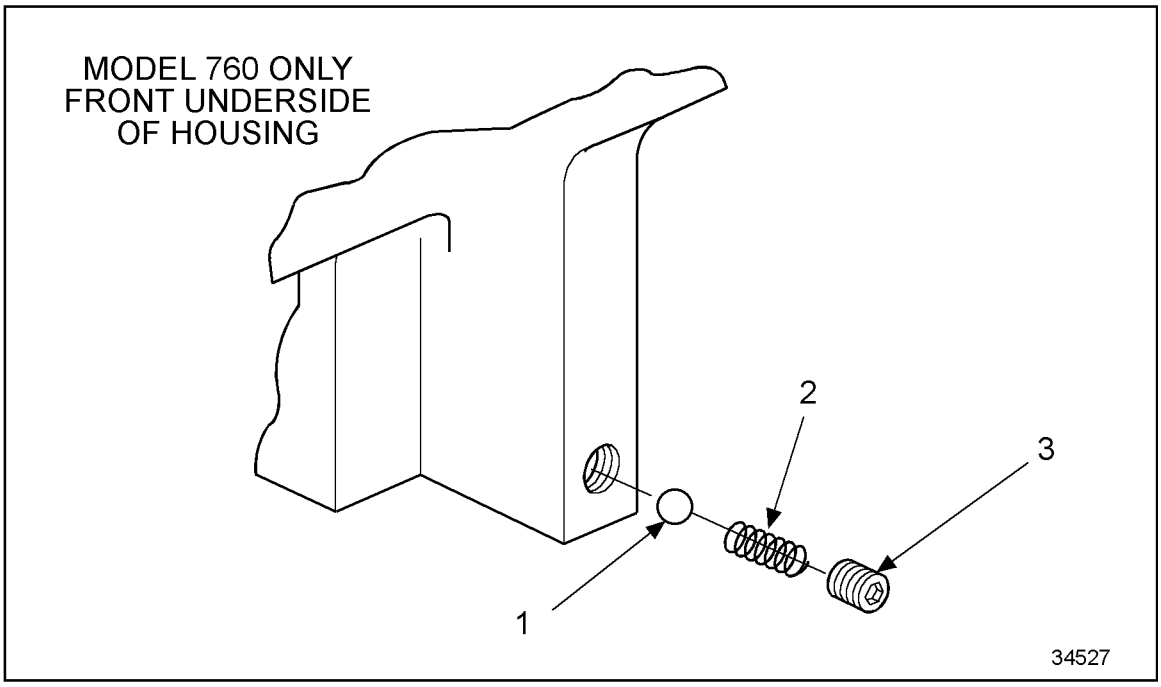

1. Ball Check Valve
2. Spring
3. Pipe Plug

Figure 1-502 Installation of Ball Check Valve

2. Insert the plug. Torque pipe plug to 11.2 N·m (8.3 lb·ft).

Install the slave piston as follows:

1. Install the screw from the slave piston side of the bridge.
2. Install the leveling screw locknut.

(Rev. 2004) *All information subject to change without notice.*
6SE483 0401 Copyright © 2004 DETROIT DIESEL CORPORATION

3. Install the bridge with the leveling screw toward the center of the housing. See Figure 1-503.

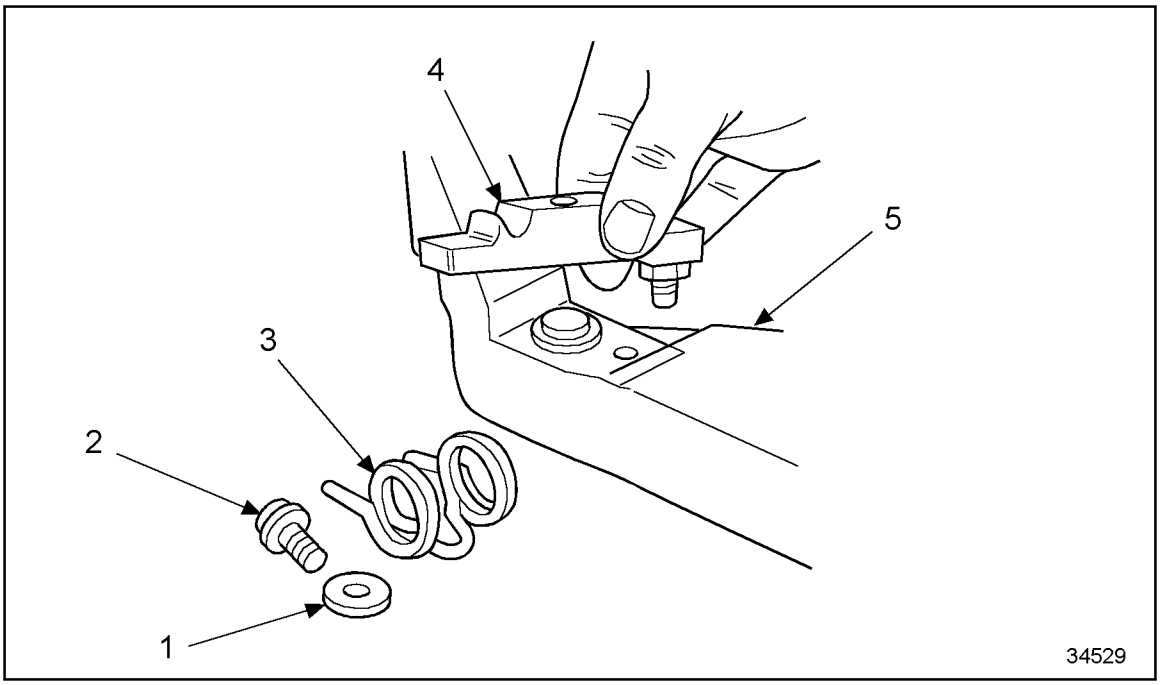

1. Washer
2. Screw
3. Torsion Spring
4. Bridge Assembly
5. Jake Brake® Housing

Figure 1-503 Installing Bridge with Leveling Screw Toward Center of Housing

 Copyright © 2004 DETROIT DIESEL CORPORATION

4. Install the slave piston assembly torsion spring with the ends over the bridge. See Figure 1-504.

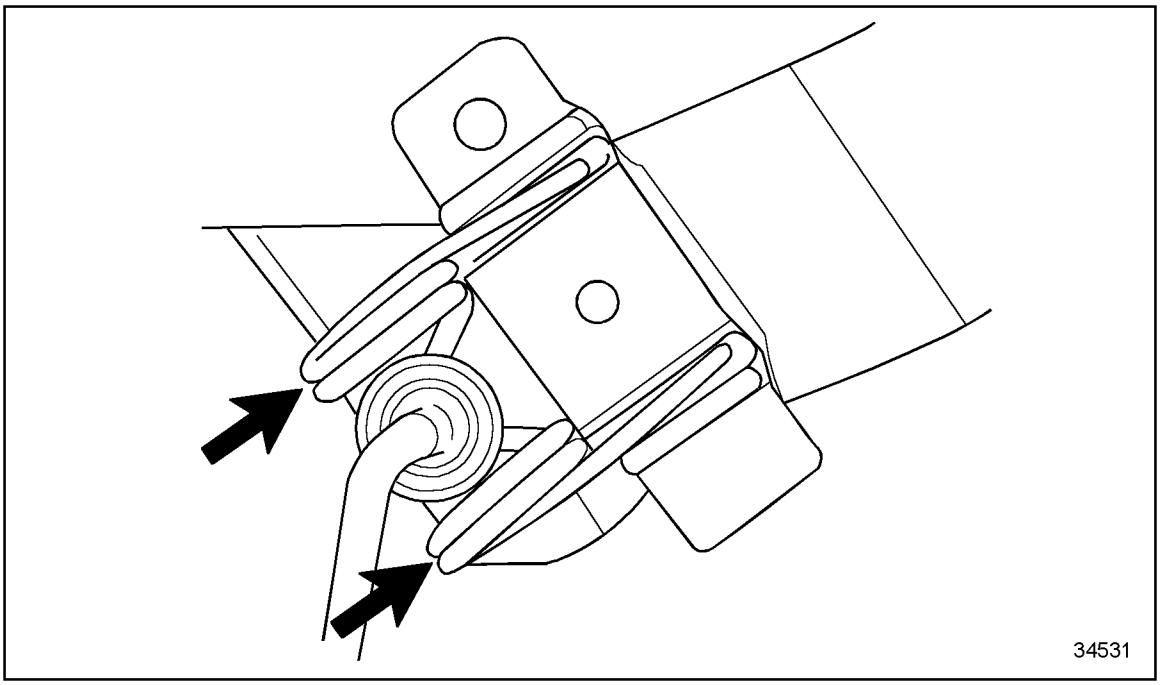

Figure 1-504 Installing the Slave Piston Assembly Torsion Spring

5. Install the screw and washer over the center part of the spring.

NOTICE:
While tightening the screw on the torsion spring, push the spring toward the slave piston assembly. Failure to do so may result in contact between the intake valve adjusting screw and torsion spring. Serious engine damage may result.

6. Torque the screw to 20 N·m (15 lb·ft.).
7. Torque the slave piston leveling screw locknut to 47 N·m (35 lb·ft.).

1.30.5 Installation of Model 760, 765, or 770 Jake Brake®

Install the model 760, 765, or 770 Jake Brake® as follows:

NOTE:
The following procedures apply to Model 760, 765, and 770 Jake Brake®. For Model 790/795 Jake Brake® installation procedures, refer to section 1.30.8.

1. Adjust the intake and exhaust valve clearances and set the injector heights. Refer to section 12.2.

(Rev. 2004) *All information subject to change without notice.*
6SE483 0401 Copyright © 2004 DETROIT DIESEL CORPORATION

CAUTION:

To avoid injury from flying debris when using compressed air, wear adequate eye protection (face shield or safety goggles) and do not exceed 40 psi (276 kPa) air pressure.

2. Attach the length of tubing to a blow gun nozzle, and blow out the oil from the bolt holes.
3. Cover the holes with hand towels to minimize oil spray.

NOTE:
Removing the oil from the bolt holes prevents the cylinder head from cracking when tightening the bolts.

4. Place the spacer bar on the exhaust manifold side of the cylinder head with the "OUT" markings adjoining each other and facing the exhaust manifold. See Figure 1-505, and see Figure 1-506.

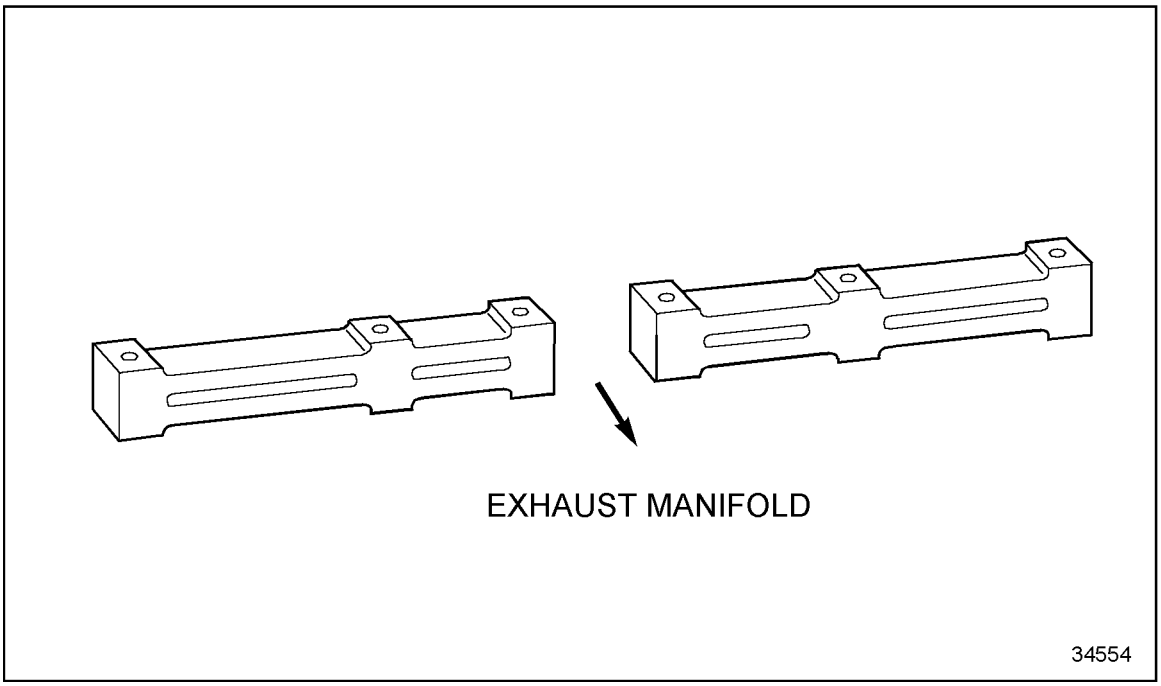

Figure 1-505 Spacer Bars with "Out" Marks Adjoined

 Copyright © 2004 DETROIT DIESEL CORPORATION

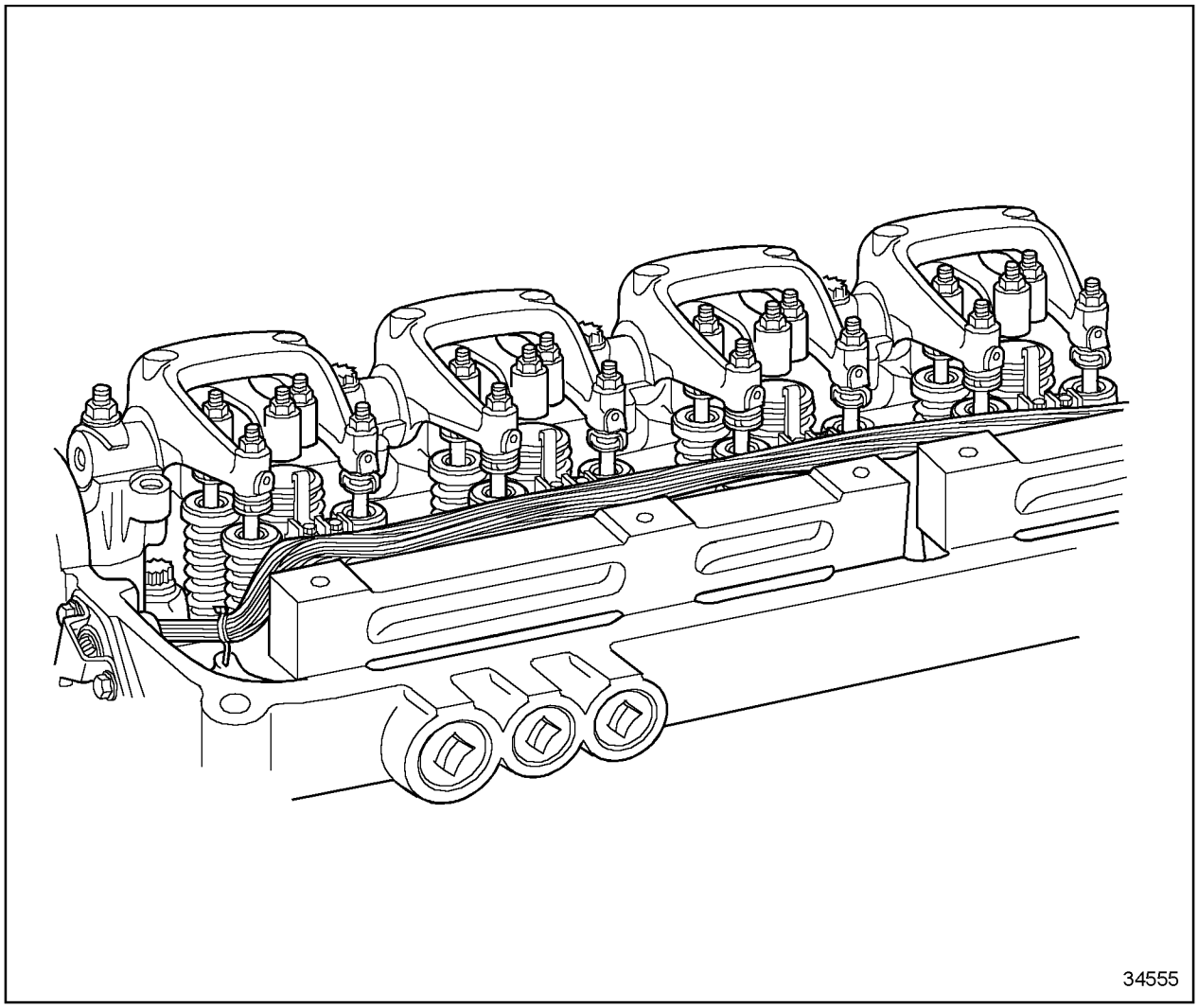

Figure 1-506 Location of Spacer Bars

5. Place the three engine brake housings over the rocker shafts with the solenoid valves toward the camshaft side of the engine.

NOTE:
Be sure housings do not interfere with wiring harness.

(Rev. 2004) *All information subject to change without notice.*
6SE483 0401 Copyright © 2004 DETROIT DIESEL CORPORATION

CAUTION:

To avoid injury from loss of vehicle braking control due to an improperly installed Jake Brake, do not mix rocker arm shaft and Jake Brake mounting bolts.

NOTICE:

Do not mix the rocker arm shaft bolts and the Jake Brake® capscrews. If the rocker arm shaft bolt is mistakenly used to mount the Jake Brake® housing, the longer shoulder on the bolt will block the oil supply to the Jake Brake® on the camshaft side of the housing. The brake will not retard the engine as designed. This condition could cause vehicle damage.

NOTE:
The rocker arm shaft capscrew and Jake Brake® capscrew, part of the Jake Brake® assembly, are similar in appearance. Both are M12 x 110 mm (4.33 in.) long and have 12–point heads.

NOTE:
In the event of a housing hold down bolt failure on a Jacobs engine brake housing, replace all bolts on that particular housing.

NOTICE:

Use bolts that have the Jacobs logo, circled "J". Installation of bolts that do not have the circled "J" may result in damage to the engine, engine brake or both.

[a] The Jake Brake® bolt has the Jacobs logo (circled "J") and the letters "EF" marked on the head. The bolt length is no longer marked atop the bolt head.

[b] The DDC rocker arm shaft bolt has the DDC logo (spinning arrows) and the vendor I.D. (F-C) on its head.

[c] Jake Brake® model 760 requires two bolts along with one bolt and new washers.

NOTE:
Be sure that only Jake Brake® bolts, see Figure 1-507, are installed in the Jake Brake® housing.

 Copyright © 2004 DETROIT DIESEL CORPORATION

[d] The DDC bolt shoulder is much longer, 17.0 mm (0.669 in.) versus 4 mm (0.157 in.) than the Jake Brake® bolt. See Figure 1-507.

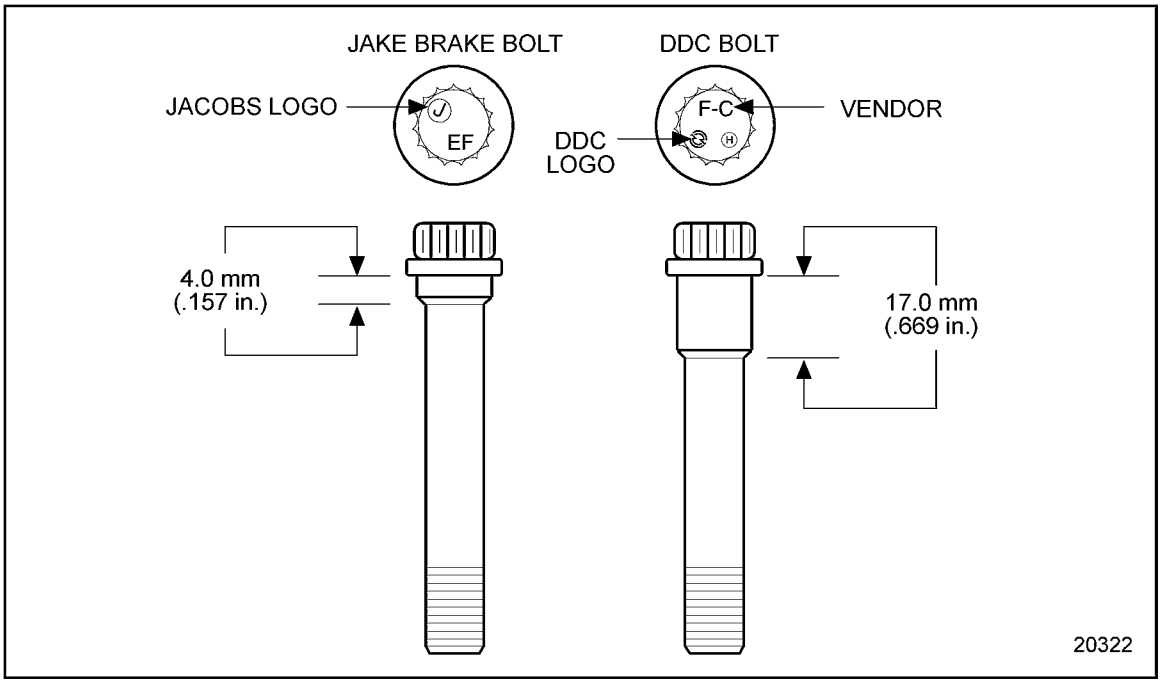

Figure 1-507 Jake Brake® and DDC Bolt Identification

(Rev. 2004) *All information subject to change without notice.*
6SE483 0401 Copyright © 2004 DETROIT DIESEL CORPORATION

NOTICE:
The model 760 uses two lengths of capscrews. Six 120 mm bolts should be installed on the exhaust side of the engine. Three 110 mm bolts should be installed on the camshaft side of the engine. Failure to do so will result in engine damage.

6. On model 760, install one washer onto each 120 mm (4.75 in.) bolt, and insert into brake housing on the exhaust manifold side (two per housing). See Figure 1-508.

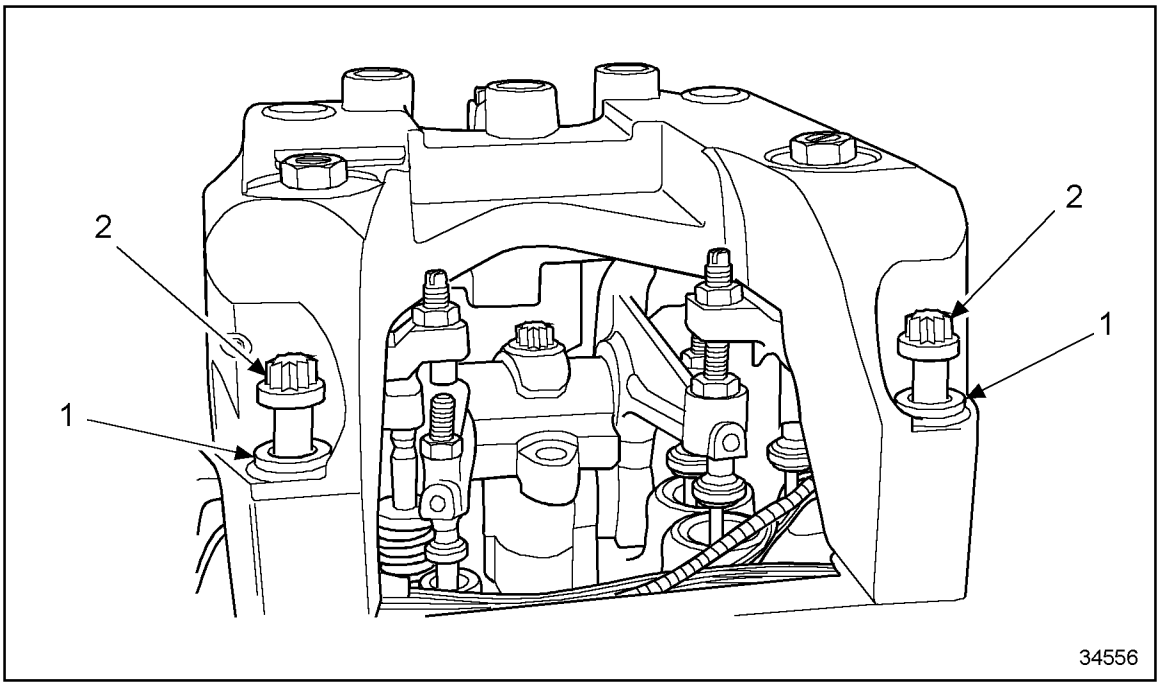

1. Washer
2. Long Bolt

Figure 1-508 Installation of Jake Brake Housing Bolts on Exhaust Manifold Side

 Copyright © 2004 DETROIT DIESEL CORPORATION

7. On model 760, install one washer on the 110 mm (4.375 in.) bolt, and insert into brake housing at the camshaft side (one per housing). See Figure 1-509.

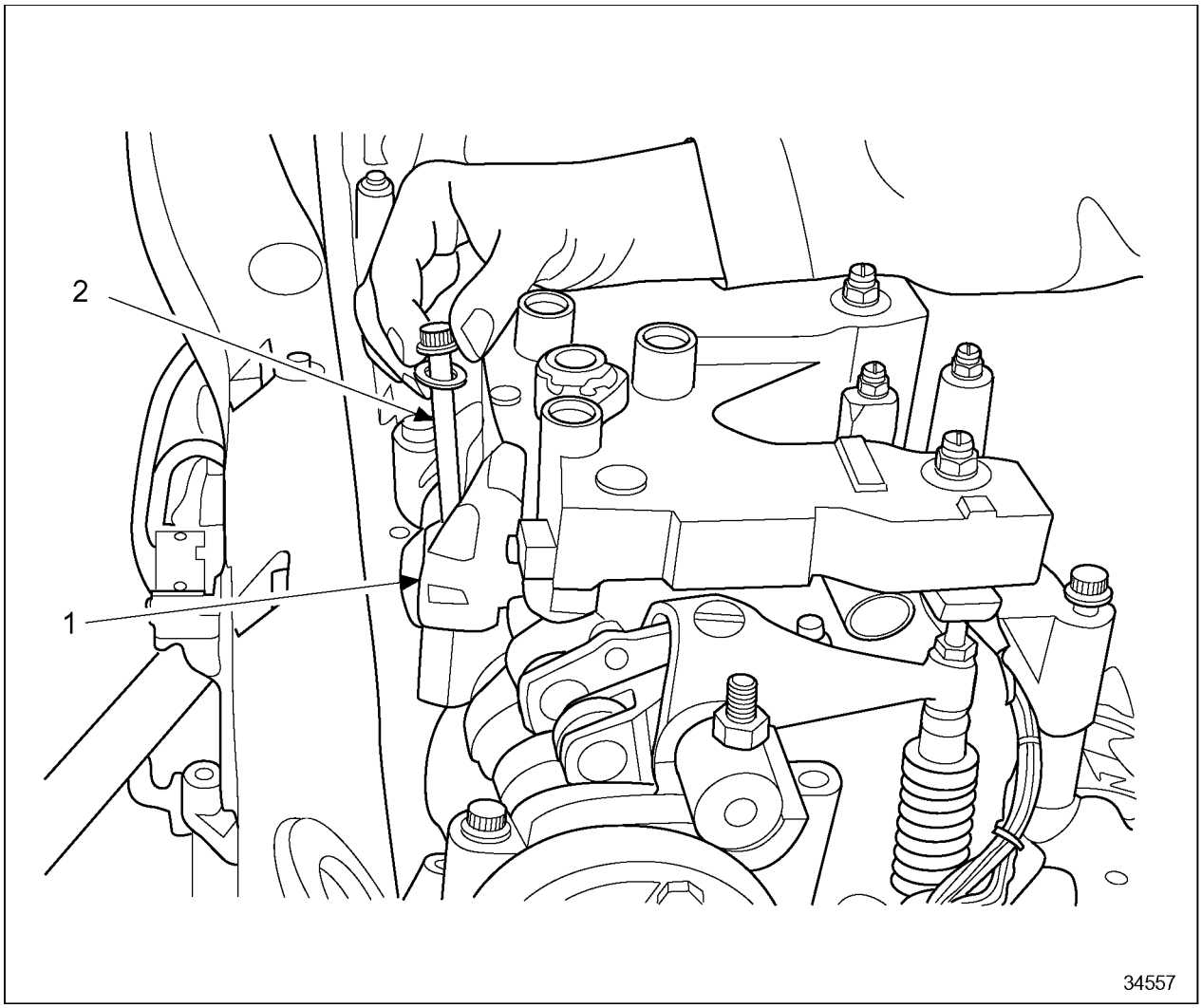

1. Jake Brake® Housing Assembly
2. Capscrew

Figure 1-509 Installation of Jake Brake® Housing Bolts on Camshaft Side

8. On models 760A, 760B, 765, and 765A, lubricate each hold down bolt with clean engine oil.

NOTE:
All the housing capscrews for these models are the same length of 110 mm (4.375 in.).

9. On models 760A, 760B, 765, and 765A, install a washer on each bolt, and install into housings (three bolts per housing).

(Rev. 2004) *All information subject to change without notice.*
6SE483 0401 Copyright © 2004 DETROIT DIESEL CORPORATION

10. On models 760A and 765, move the housing from side to side, and locate the housing in the center position of the movement. See Figure 1-510.

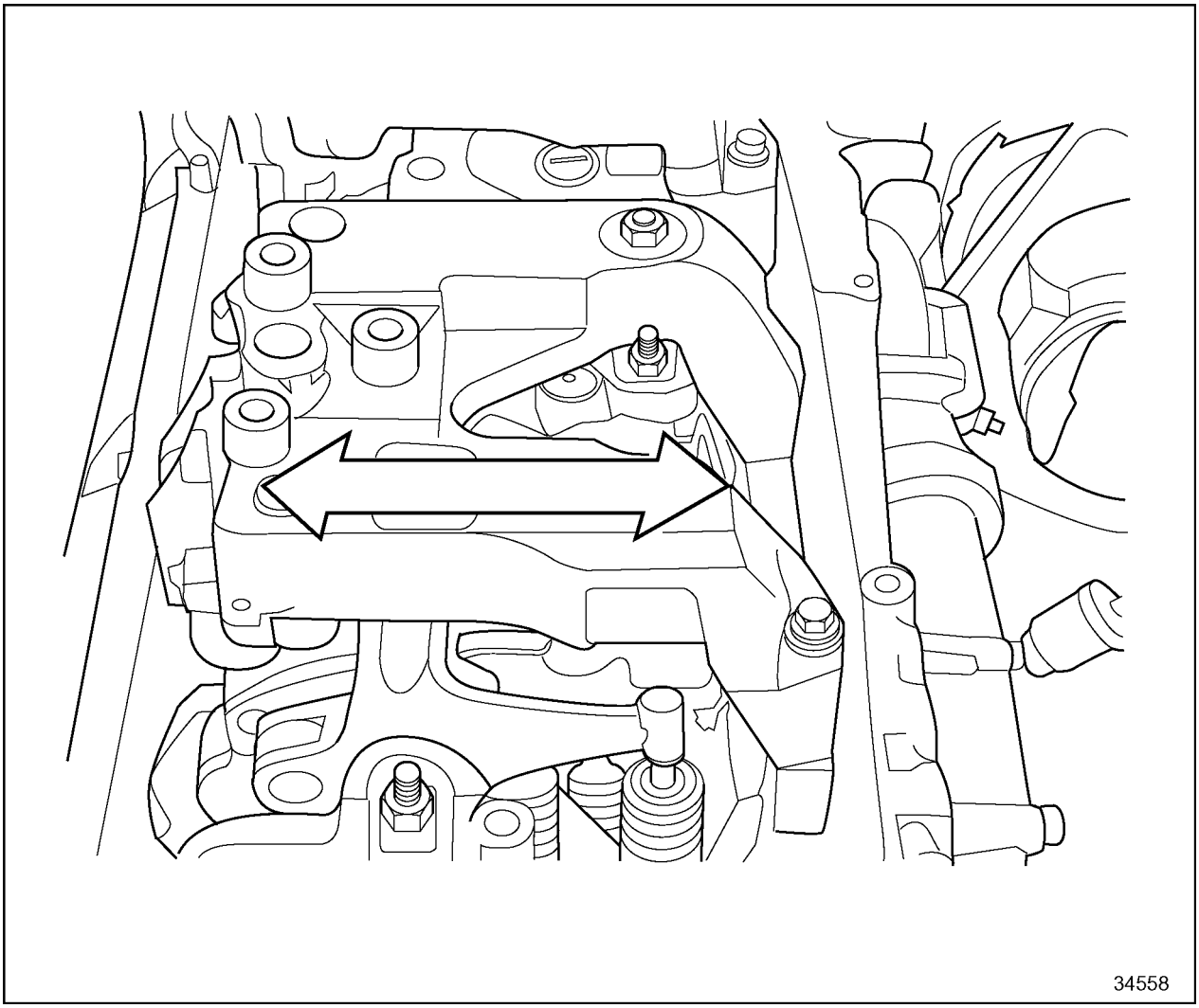

Figure 1-510 Locating Center Position of Housing

11. On models 760B and 765A, move the housing from side to side, and locate as far toward the camshaft side of the engine as possible.
12. On all models, torque the engine brake capscrews using the following sequence:
    [a] Torque the three bolts on the camshaft side of the engine to 55 N·m (40 lb·ft).
    [b] Torque the six bolts on the exhaust manifold side of the engine to 55 N·m (40 lb·ft).
    [c] Repeat the tightening sequence and re-torque all bolts to 136 N·m (100 lb·ft).
    [d] Check the torque to 136 N·m (100 lb·ft).
13. Secure injector wire harness to each of the six Jake Brake® spacer bars with tie straps.
    [a] Verify tie strap is properly seated on the spacer bar. See Figure 1-511

 Copyright © 2004 DETROIT DIESEL CORPORATION

[b] Verify tie strap is tight on spacer bar and does not move.

[c] Clip excess tails from tie strap.

NOTE:
Ensure all wires are away from moving parts.

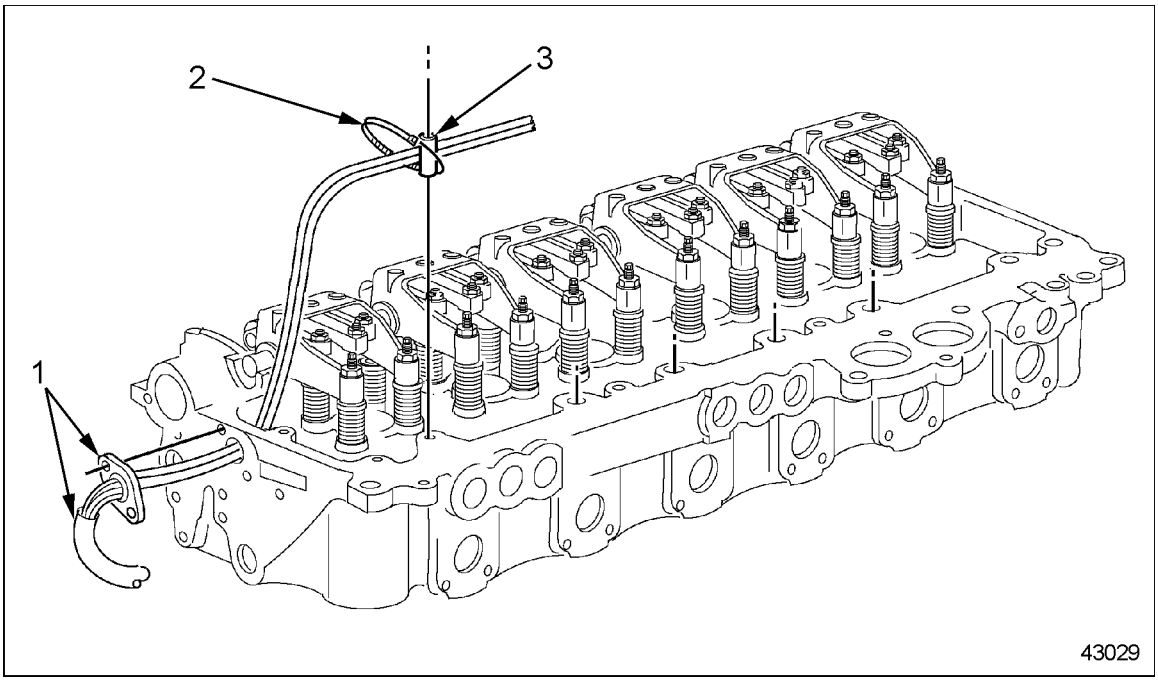

1. Injector Harness
2. Tie Strap
3. Spacer Bar

Figure 1-511 Injector Harness Tie Strap Location

(Rev. 2004) *All information subject to change without notice.*
6SE483 0401 Copyright © 2004 DETROIT DIESEL CORPORATION

14. Connect wiring harness solenoid connectors to solenoids. See Figure 1-512

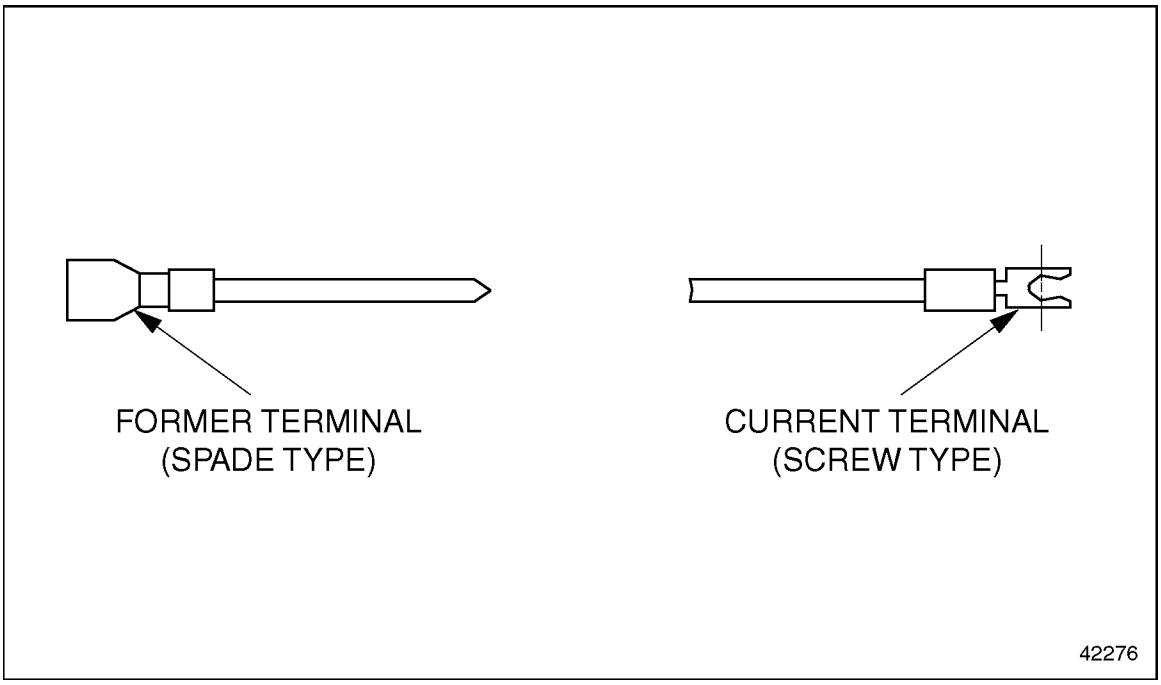

Figure 1-512 Jake Brake® Wire Terminal Connection Identification

1.30.5.1 Adjustment of Slave Piston on Model 760, 765, or 770 Jake Brake®

Make the following adjustment with the engine stopped and cold, and the oil temperature at 60°C (140°F) or below. The exhaust valves on the cylinder *must* be in the closed position (rocker arm roller on the base circle of the camshaft). When setting the engine brake lash, the exhaust valves must be in the closed position. Adjust the slave piston on all models as follows:

NOTE:
The following procedures apply to Model 760, 765, and 770 Jake Brake®. For Model 790/795 Jake Brake® slave piston lash setting procedures, refer to section 1.30.8.1.

NOTE:
Model 770 Jacobs engine brake requires a special procedure for adjusting the slave piston. The procedure is clearly indicated in the following adjustment steps.

 Copyright © 2004 DETROIT DIESEL CORPORATION

NOTICE:
Improper slave piston adjustment can result in engine or brake housing damage.

NOTICE:
Strictly follow the slave piston adjustment procedure. Failure to use the proper adjustment procedure will result in poor engine brake performance and/or serious engine damage.

1. Refer to section 1.30 for proper slave piston clearance setting.
2. Back out the leveling screw in the slave piston assembly until the end of the screw is beneath the surface of the bridge in the slave piston assembly. See Figure 1-513.

NOTE:
The leveling screw is located in the bridge member of the slave piston assembly.

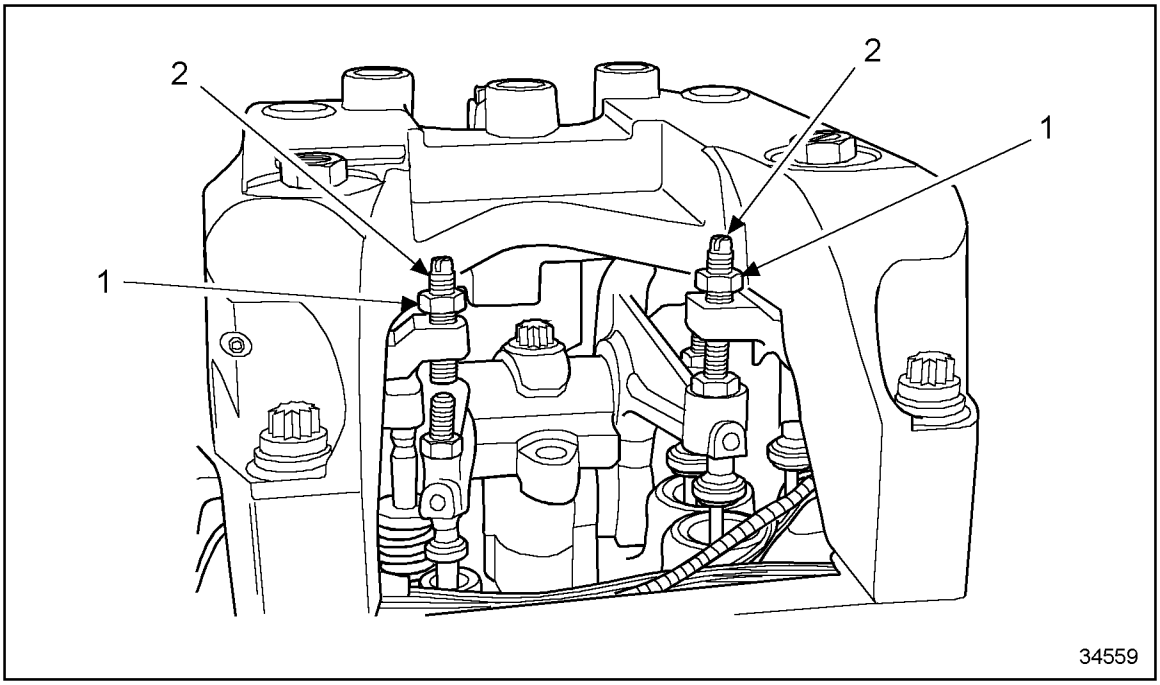

1. Leveling Screw
2. Locknut

Figure 1-513 Location of Leveling Screw

3. On models 760, 760A, 760B, 765, and 765A, place the correct size feeler gage between the solid side of the slave piston (the side without the leveling screw) and the exhaust rocker arm adjusting screw. Feeler gage sizes are Listed in Table 1-11.

(Rev. 2004) *All information subject to change without notice.*
6SE483 0401 Copyright © 2004 DETROIT DIESEL CORPORATION

4. On models 760, 760A, 760B, 765, and 765A, turn the slave piston adjusting screw clockwise until a slight drag is felt on the feeler gage. See Figure 1-514.

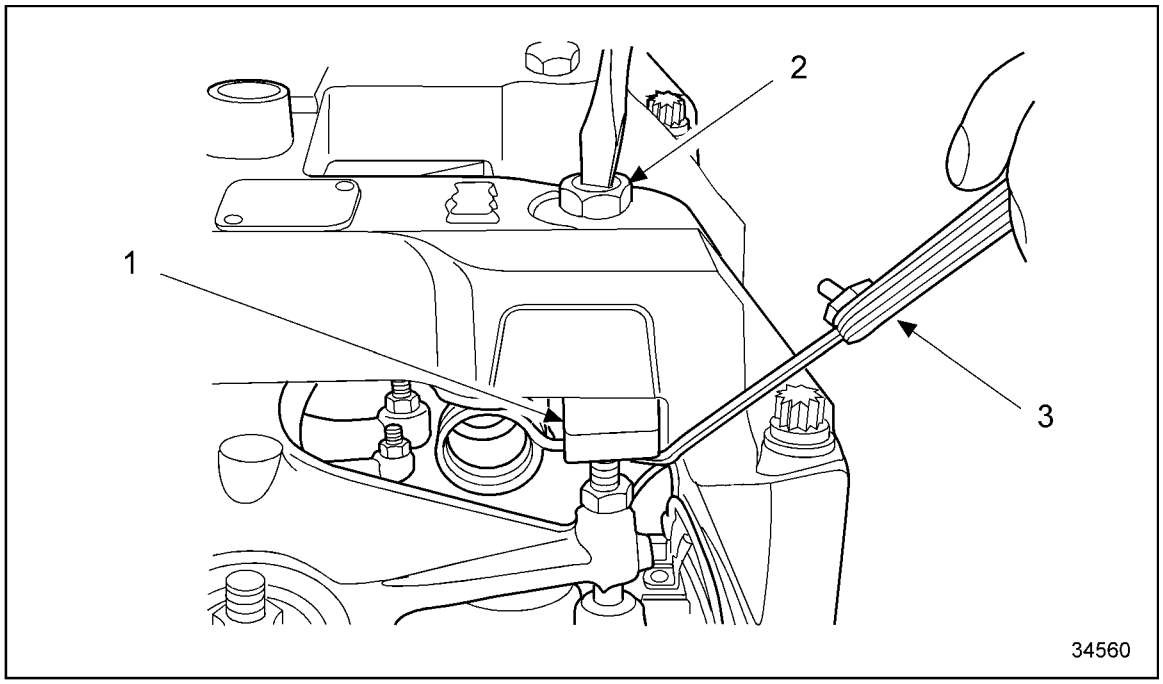

1. Slave Piston Bridge
2. Slave Piston Adjusting Screw
3. Feeler Gage

Figure 1-514 Turn Slave Piston Adjusting Screw Clockwise

5. Perform the following additional steps on model 770:

   [a] Turn in the J-Lash™ adjusting screw until the solid side of the slave piston bridge assembly contacts the exhaust valve and the valve springs begin to compress. Turn in one additional turn.

NOTICE:
All oil must be purged from the J-Lash adjusting screw. Oil remaining in the J-Lash screw will cause inaccurate clearance adjustment, resulting in possible engine or engine brake damage. If oil is below room temperature (below 60°F), wait at least two minutes for oil to be purged from the J-Lash adjusting screw.

NOTE:
Wait at least 30 seconds for oil to be purged from the J-Lash™ adjusting screw.

   [b] Back out the adjusting screw **only** until the correct size feeler gage can be inserted between the solid side of the slave piston bridge assembly and the exhaust valve.

 Copyright © 2004 DETROIT DIESEL CORPORATION

[c] Adjust the J-Lash™ so that a light drag is felt on the feeler gage.

NOTE:
Do not back out the J-Lash™ more than required to obtain a light drag on the feeler gage.

[d] Use a screwdriver to hold the J-Lash™ in place, and torque the lock nut to 34 N·m (25 lb·ft).

NOTE:
If the J-Lash™ screw is backed out until it no longer compresses the slave piston spring, oil will enter the screw and the adjustment will be incorrect. If this occurs, repeat the J-Lash™ adjustment procedure.

[e] Recheck the lash settings. If clearance setting is incorrect, repeat the J-Lash™ adjustment procedure.

NOTE:
Once the engine brake has been run, oil enters the J-Lash™ screw making the engine brake adjustment unreadable. If unsure of the adjustment, repeat the J-Lash™ adjustment procedure.

6. On all models, hold the screw in position, and torque the locknut to 34 N·m (25 lb·ft).
7. Check the adjustment, and repeat if necessary.

NOTE:
Do not disassemble the slave piston adjusting screws.

8. Place the correct feeler gage between the leveling screw and the rocker arm adjusting screw.

(Rev. 2004) *All information subject to change without notice.*
6SE483 0401 Copyright © 2004 DETROIT DIESEL CORPORATION

9. Turn the leveling screw clockwise until a slight drag is felt on the feeler gage. See Figure 1-515.

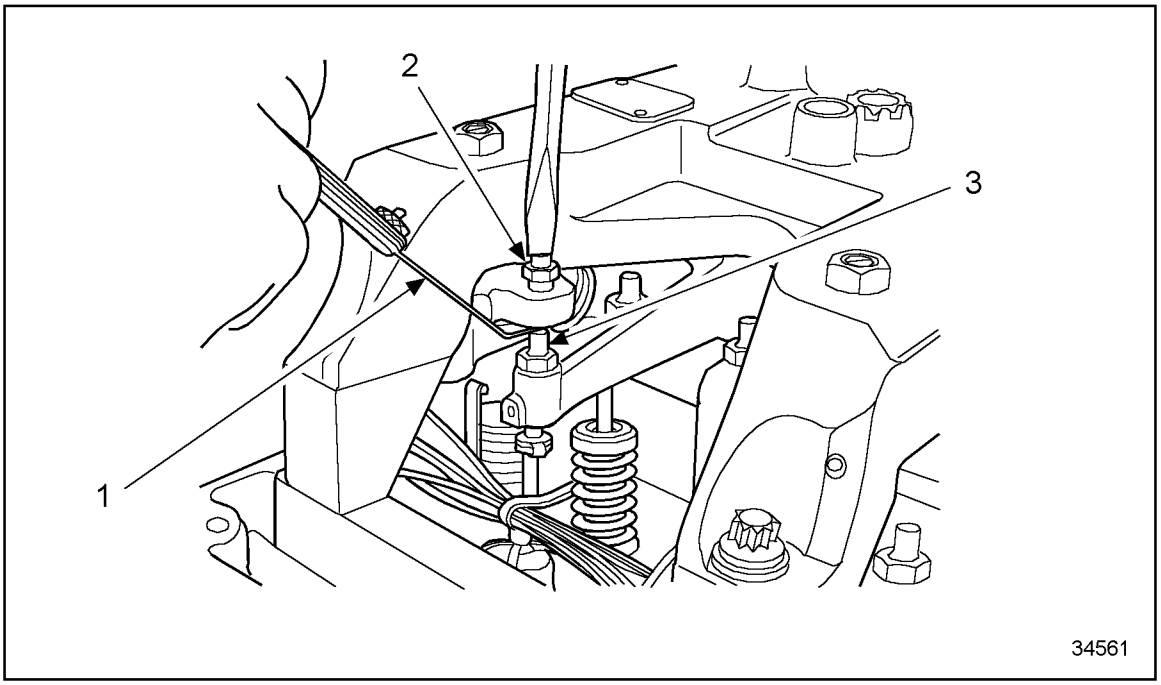

1. Feeler Gage
2. Slave Piston Leveling Screw
3. Rocker Arm Adjusting Screw

Figure 1-515 Setting Clearance on Leveling Screw and Rocker Arm Adjusting Screw

10. Hold the leveling screw in position, and torque the locknut to 47 N·m (35 lb·ft).
11. Check adjustment, and repeat if necessary.
12. Repeat the adjustment procedures for the remaining cylinders. Refer to step 2 through step 11.

NOTE:
Bar over the engine when necessary to place the exhaust valves in the closed position for slave piston adjustment.

13. Install the engine rocker cover. Refer to section 1.6.8for one-piece, refer to section 1.6.9 for two-piece and three-piece.
14. Install all remaining components that were removed for this procedure.
15. Connect starting power for the engine.
16. Verify proper Jake Brake® installation by driving the vehicle, then checking engine brake performance.

 Copyright © 2004 DETROIT DIESEL CORPORATION

1.30.6 Removal of Model 790/795 Jake Brake® Assembly

Remove the Model 790/795 Jake Brake® as follows:

CAUTION:

To avoid injury from hot surfaces, allow engine to cool before removing any component. Wear protective gloves.

CAUTION:

To avoid injury from accidental engine startup while servicing the engine, disconnect/disable the starting system.

1. With the engine at ambient temperature and power to the starting system disconnected; refer to section 1.6.2 for a one piece rocker cover, refer to section 1.6.3 for a two piece rocker cover for diesel, refer to section1.6.4 for a two piece rocker cover for gas, refer to section 1.6.5 for a three piece rocker cover, and remove the engine rocker cover.

NOTE:
If the engine has a two-piece cover, the lower valve cover base does not have to be removed to gain access to the engine brake housings.

2. Note the location of the rocker arm shaft, the exhaust valve rocker arm, the fuel injector rocker arm, and the intake valve rocker arm.

(Rev. 2004) *All information subject to change without notice.*
6SE483 0401 Copyright © 2004 DETROIT DIESEL CORPORATION

3. Disconnect the lead wires from each of the solenoid valves and the wire harness clips. See Figure 1-516.

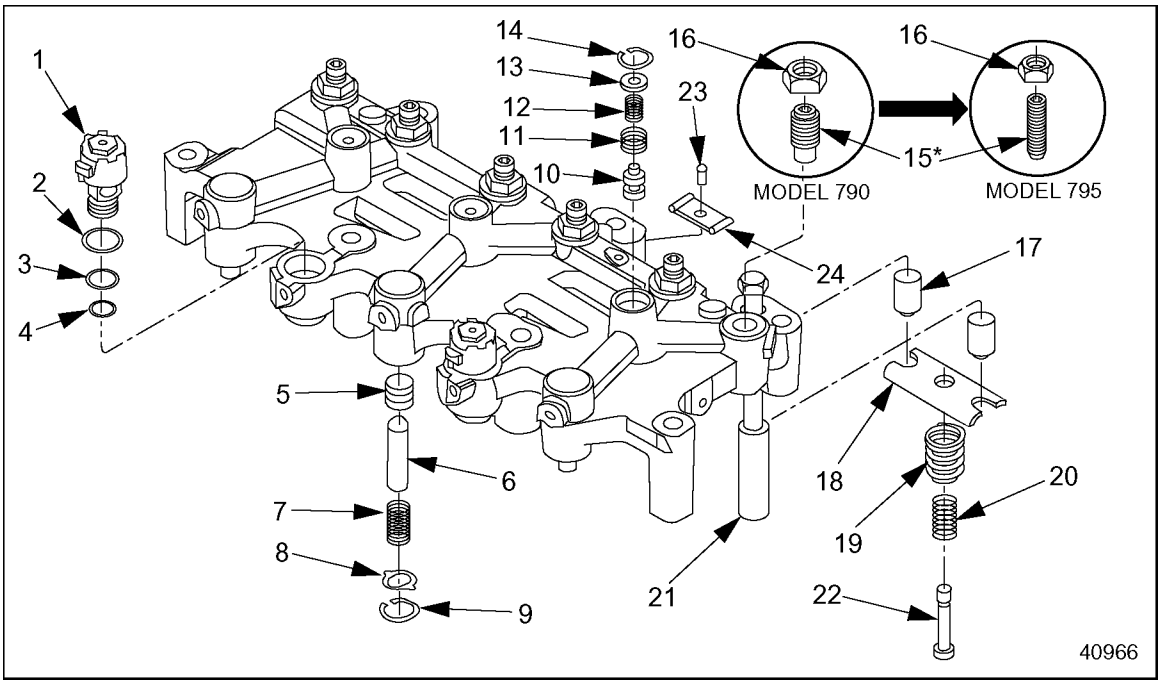

1. Solenoid Valve
2. Solenoid Upper Seal Ring
3. Solenoid Center Seal Ring
4. Solenoid Lower Seal Ring
5. Master Piston
6. Master Piston Pushrod
7. Master Piston Spring
8. Master Piston Retainer
9. Master Piston Retaining Ring
10. Control Valve
11. Outer Control Valve Spring
12. Inner Control Valve Spring
13. Control Valve Cover
14. Retaining Ring
15. Adjusting Screw*
16. Locknut
17. Slave Piston
18. Slave Piston Bridge
19. Outer Slave Piston Spring
20. Inner Slave Piston Spring
21. Spacer Tube
22. Shoulder Bolt
23. Drive Screw
24. Wire Harness Clip

*Note that Model 790 Jake Brake® uses a J-Lash™ assembly. Model 795 Jake Brake® uses a solid screw.

Figure 1-516 Typical Model 790/795 Jake Brake® Assembly

 Copyright © 2004 DETROIT DIESEL CORPORATION

4. Remove the six capscrews and nut that secure the engine brake housing. See Figure 1-517.

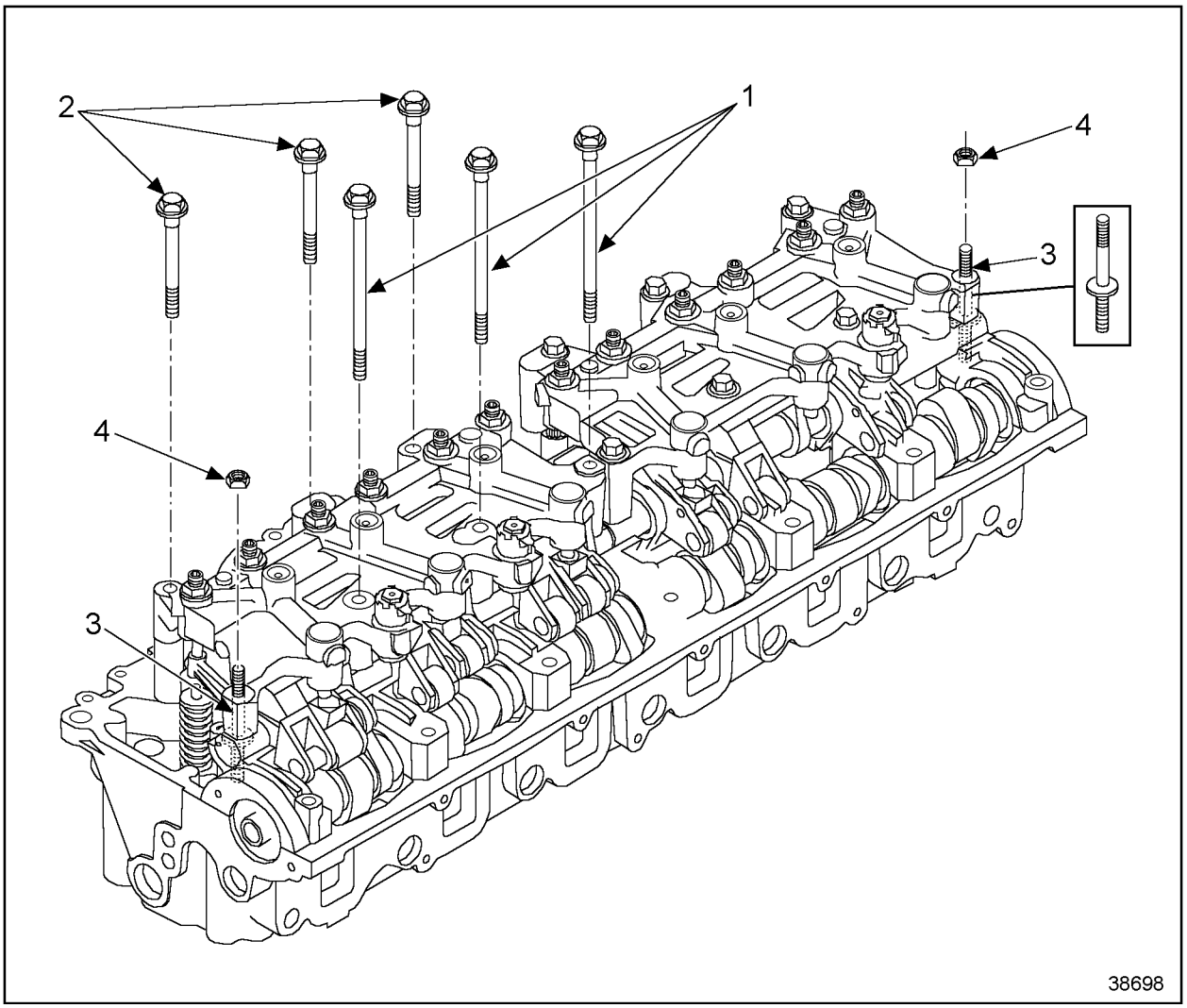

1. Capscrew - 170 mm long
2. Capscrew - 140 mm long
3. Stud Bolt
4. Nut

Figure 1-517 Model 790/795 Jake Brake® Fasteners

5. Remove the engine brake housing.
6. Repeat steps1 through step 5to remove the second Jake Brake® housing.
7. Retain the six spacer tubes. See Figure 1-516.

1.30.6.1 Disassembly of Model 790/795 Jake Brake®

Disassemble Model 790/795 Jake Brake® as follows:

(Rev. 2004) *All information subject to change without notice.*
6SE483 0401 Copyright © 2004 DETROIT DIESEL CORPORATION

NOTICE:
To avoid possible engine damage, do not disassemble or tamper with the solenoid valve.

 Copyright © 2004 DETROIT DIESEL CORPORATION

1. Unscrew and remove the solenoid valve with a 3/4 in.-6 point socket and extension. Discard the three solenoid seal rings. See Figure 1-518.

NOTE:
If the lower solenoid seal ring stays in the bottom of the housing bore, remove with a piece of wire or small 90 degree pick.

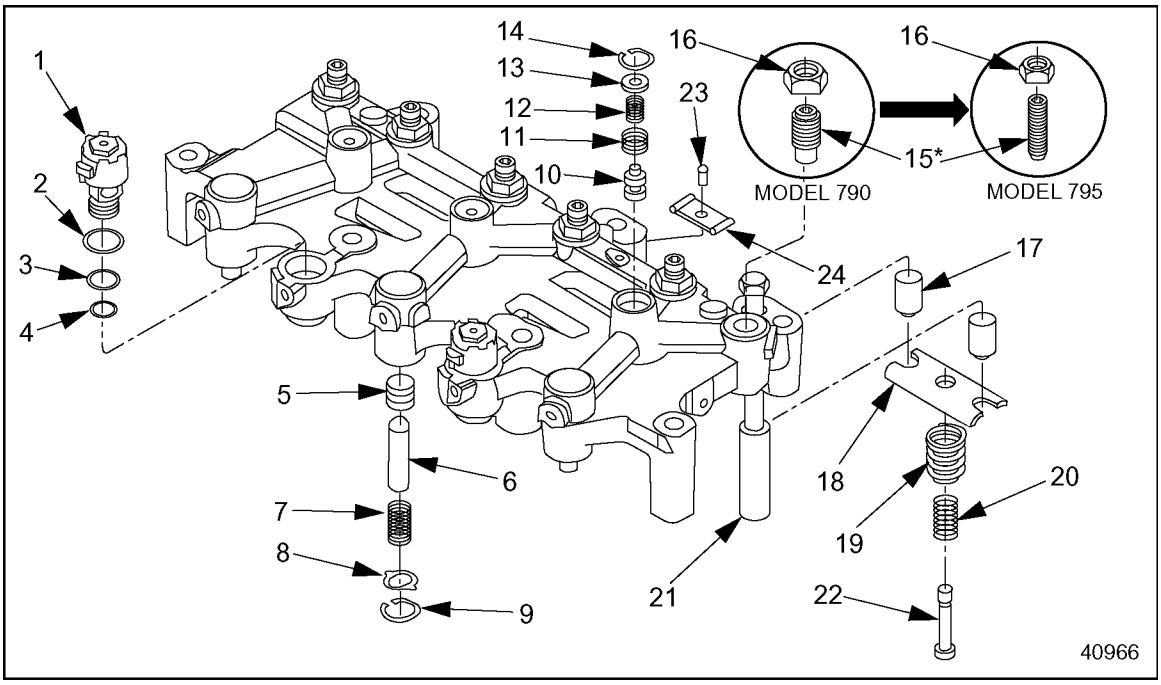

1. Solenoid Valve
2. Solenoid Upper Seal Ring
3. Solenoid Center Seal Ring
4. Solenoid Lower Seal Ring
5. Master Piston
6. Master Piston Pushrod
7. Master Piston Spring
8. Master Piston Retainer
9. Master Piston Retaining Ring
10. Control Valve
11. Outer Control Valve Spring
12. Inner Control Valve Spring
13. Control Valve Cover
14. Retaining Ring
15. Adjusting Screw*
16. Locknut
17. Slave Piston
18. Slave Piston Bridge
19. Outer Slave Piston Spring
20. Inner Slave Piston Spring
21. Spacer Tube
22. Shoulder Bolt
23. Drive Screw
24. Wire Harness Clip

*Note that Model 790 Jake Brake® uses a J-Lash™ assembly. Model 795 Jake Brake® uses a solid screw.

Figure 1-518 Typical Model 790/795 Jake Brake® Assembly

2. Repeat step1 for removal of the remaining solenoid valves.

(Rev. 2004) *All information subject to change without notice.*
6SE483 0401 Copyright © 2004 DETROIT DIESEL CORPORATION

CAUTION:

To avoid injury from flying parts when working with components under spring tension, wear adequate eye protection (face shield or safety goggles).

3. Press down the control valve cover using an appropriate diameter rod to relieve spring pressure, while slowly removing the retaining ring with snap ring pliers until spring pressure ceases. Remove the two control valve springs. Discard all these parts. See Figure 1-518.
4. Using needle-nose pliers, reach into the bore and grasp the stem of the control valve. Remove and discard the control valve. See Figure 1-518.
5. Repeat step3 and step 4for removal of the remaining control valves. See Figure 1-518.
6. Loosen all the locknuts; remove the adjusting screws and locknuts from housing. See Figure 1-518.

NOTE:
For Model 790 Jake Brakes® remove the J-Lash™ assembly screw. For Model 795 Jake Brakes® remove the solid screw.

7. Repeat step6 for removal of the remaining adjusting screws and locknuts. See Figure 1-518. Retain the adjusting screws and locknuts.
8. Turn the Jake Brake® housing over.
9. Press down the master piston retainer, while slowly removing the master piston retainer ring with snap ring pliers until spring pressure ceases. See Figure 1-518.
10. Remove and save the master pistons and push rods. See Figure 1-518.
11. Repeat step9 and step 10for removal of the remaining master pistons. Discard the master piston springs, retainers and retaining rings. See Figure 1-518.
12. Carefully remove the shoulder bolt and springs that retain the slave piston. See Figure 1-518. Discard the inner and outer slave piston springs.
13. Remove and save the slave piston bridge and the slave pistons. See Figure 1-518.
14. Repeat step12 and step 13for removal of the remaining slave pistons. See Figure 1-518.

1.30.6.2 Cleaning of Model 790/795 Jake Brake®

Clean the Jake Brake® as follows:

1. Clean all parts in an OSHA-approved cleaning solvent.

 Copyright © 2004 DETROIT DIESEL CORPORATION

CAUTION:

To avoid injury from flying debris when using compressed air, wear adequate eye protection (face shield or safety goggles) and do not exceed 40 psi (276 kPa) air pressure.

2. Dry components with compressed air.
3. Coat all (new and reuse) components to be installed into the housings with clean engine lube oil.

1.30.6.3 Inspection of Model 790/795 Jake Brake®

The Jacobs engine brake is typically a trouble-free device. However, inspections are necessary and some maintenance is required. Use the following procedures to keep the engine brake in top condition.

Inspect the Jake Brake® as follows:

1. Inspect the master piston bore for wear or damage.

NOTE:
Some wear marks are permissible.

[a] If worn or damaged, replace the master piston.

[b] If not worn or damaged, continue with inspection.

2. Inspect the master piston and push rod for wear or damage.

NOTE:
Some wear marks are permissible.

[a] If worn or damaged, replace the master piston or push rod.

[b] If not worn or damaged, continue with inspection.

3. Apply clean lube oil to the piston, and insert into bore.

NOTE:
Master piston should move in and out freely with no binding.

[a] If binding occurs, replace master piston and/or housing.

[b] If no binding occurs, continue with inspection.

4. Inspect slave piston components for excessive wear or damage.

[a] If worn or damaged, replace slave piston component.

[b] If not worn or damaged, proceed with inspection.

(Rev. 2004) *All information subject to change without notice.*
6SE483 0401 Copyright © 2004 DETROIT DIESEL CORPORATION

5. Inspect the control valve bore for wear or damage.

NOTE:
Some wear marks are permissible.

   [a] If worn or damaged, replace the housing.

   [b] If not worn or damaged, continue with inspection.

6. Inspect adjusting screw for excessive wear or damage.

   [a] If worn or damaged, replace adjusting screw.

   [b] If not worn or damaged, proceed with inspection.

NOTE:
Model 790 Jake Brake® uses a J-Lash™ assembly. Model 795 Jake Brake® uses a solid screw.

7. Inspect capscrews for excessive wear or damage.

   [a] If worn or damaged, replace capscrews.

   [b] If not worn or damaged, proceed with inspection.

8. Inspect spacer tubes for excessive wear or damage.

   [a] If worn or damaged, replace spacer tubes.

   [b] If not worn or damaged, proceed with inspection.

9. Inspect locknuts for excessive wear or damage.

   [a] If worn or damaged, replace locknuts.

   [b] If not worn or damaged, proceed with inspection.

10. Inspect solenoid for excessive wear or damage.

   [a] If worn or damaged, replace solenoid.

   [b] If not worn or damaged, proceed with inspection.

11. Inspect solenoid bore for excessive wear or damage.

   [a] If worn or damaged, replace solenoid.

   [b] If not worn or damaged, proceed with inspection.

12. Inspect slave piston bore for burrs at the depth where the slave piston contacts the adjusting screw.

   [a] If no burrs are found, proceed with inspection.

   [b] If burrs are found, repair as follows:

NOTE:
The burr on the slave piston bore will not affect the performance of the brake. It only affects the ability to reset the lash.

 Copyright © 2004 DETROIT DIESEL CORPORATION

[c] Use a triangle-shaped machinist's scraper, coating the tool with a generous amount of grease. See Figure 1-519. Gently remove the raised burr until the surface is flush with the remainder of the bore.

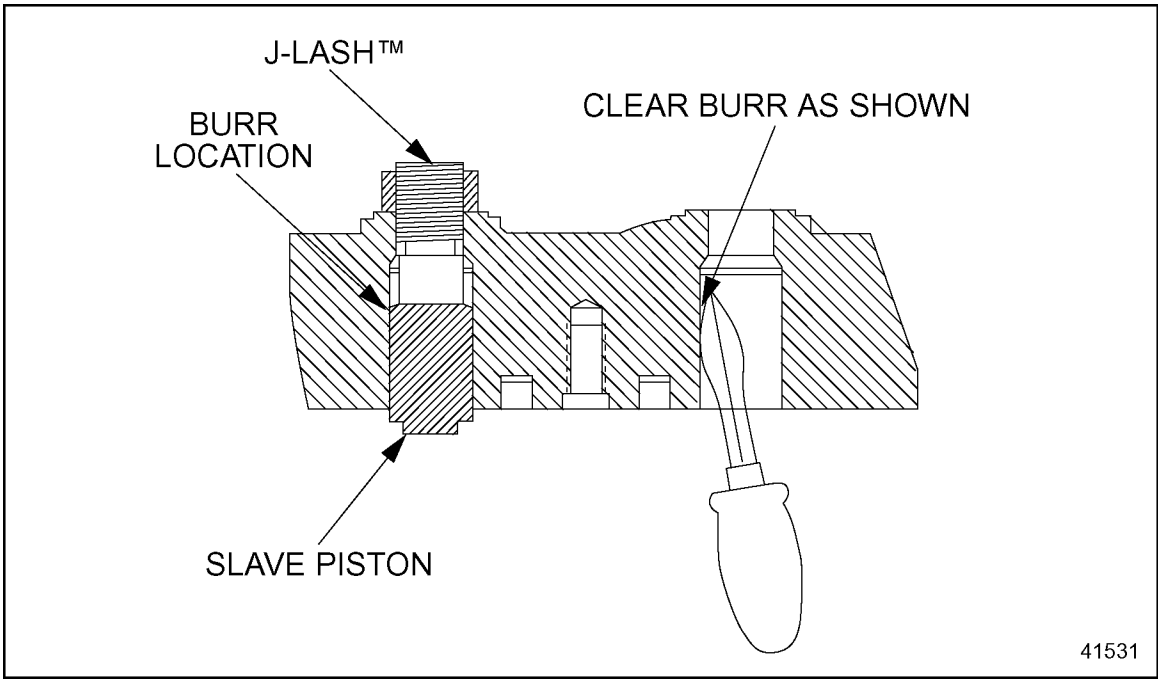

Figure 1-519 Removal of Slave Piston Bore Burr

[d] Remove any remaining grease and debris using a soft cloth or paper towel. Most of the debris will be picked up by the grease.

1.30.7 Assembly of Model 790/795 Jake Brake®

Assemble Model 790/795 Jake Brake® as follows:

(Rev. 2004) *All information subject to change without notice.*
6SE483 0401 Copyright © 2004 DETROIT DIESEL CORPORATION

1. Insert slave piston into bore. See Figure 1-520.

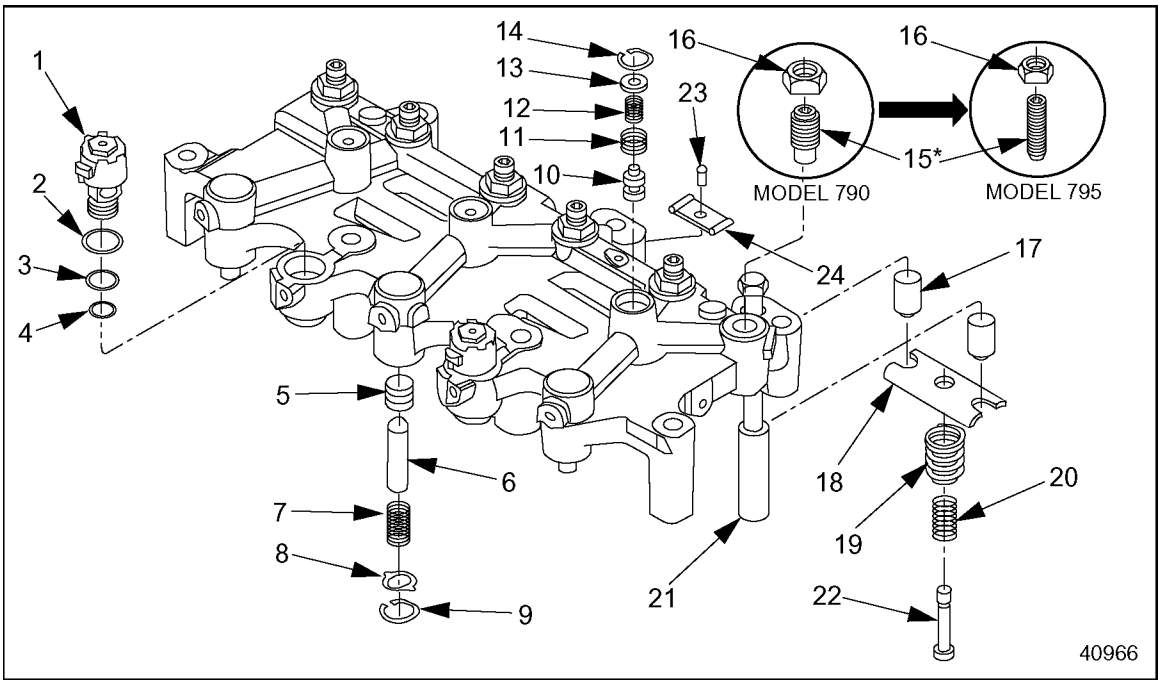

1. Solenoid Valve
2. Solenoid Upper Seal Ring
3. Solenoid Center Seal Ring
4. Solenoid Lower Seal Ring
5. Master Piston
6. Master Piston Pushrod
7. Master Piston Spring
8. Master Piston Retainer
9. Master Piston Retaining Ring
10. Control Valve
11. Outer Control Valve Spring
12. Inner Control Valve Spring
13. Control Valve Cover
14. Retaining Ring
15. Adjusting Screw*
16. Locknut
17. Slave Piston
18. Slave Piston Bridge
19. Outer Slave Piston Spring
20. Inner Slave Piston Spring
21. Spacer Tube
22. Shoulder Bolt
23. Drive Screw
24. Wire Harness Clip

*Note that Model 790 Jake Brake® uses a J-Lash™ assembly. Model 795 Jake Brake® uses a solid screw.

Figure 1-520 Typical Model 790/795 Jake Brake® Assembly

2. Install slave piston bridge. See Figure 1-520.

 Copyright © 2004 DETROIT DIESEL CORPORATION

CAUTION:

To avoid injury from flying parts when working with components under spring tension, wear adequate eye protection (face shield or safety goggles).

3. Install new springs and shoulder bolt. Torque bolts to 23 N·m (16 lb·ft). See Figure 1-520.
4. Repeat step1 through step 3for installing the remaining slave pistons.
5. To ensure proper installation of the slave piston, use the following procedure as a check.
   [a] Loosen the adjusting screws nuts and back off the adjusting screws sufficiently to allow the slave pistons to retract fully into the bores.
   [b] Verify that all slave pistons have fully retracted to where the slave piston bridge, meets the housing. If any remain in the initially set position, identify the slave piston or pistons affected.
   [c] Disassemble the shoulder bolt, bridge, and springs; remove the affected slave piston or pistons, and clean the slave piston bore of any remaining oil.
   [d] Replace the pistons with the new slave piston replacement group. If only one piston of the same cylinder is affected, replace both pistons within that cylinder.
   [e] After coating the new slave pistons with clean engine oil, inspect and verify that the new slave pistons drops to the bottom of the bore under its own weight or light pressure. In most cases, simply installing the new pistons will allow this to happen. If it does, proceed to step6. If it does not, proceed to step5[f].
   [f] Remove the piston and look for a burr on the slave piston bore at the depth where the slave piston contacts the adjusting screw.

(Rev. 2004) *All information subject to change without notice.*
6SE483 0401 Copyright © 2004 DETROIT DIESEL CORPORATION

[g] Use a triangle-shaped machinist's scraper, coating the tool with a generous amount of grease. See Figure 1-521. Gently remove the raised burr until the surface is flush with the remainder of the bore.

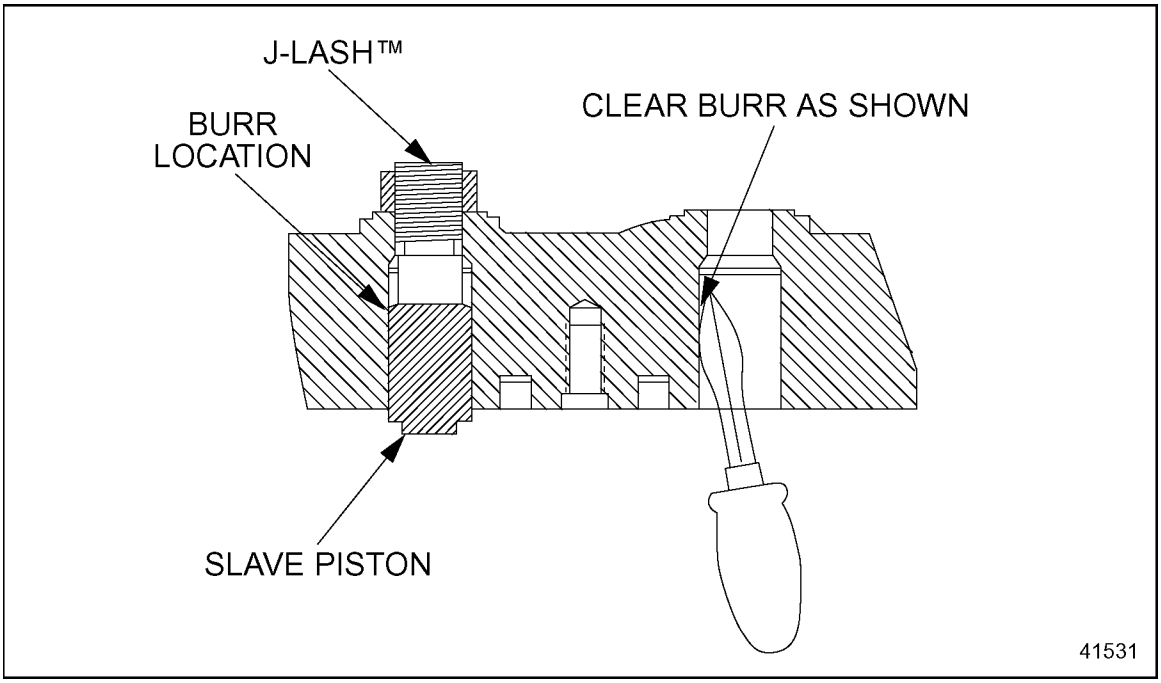

Figure 1-521 Removal of Slave Piston Bore Burr

[h] Remove any remaining grease and debris using a soft cloth or paper towel. Most of the debris will be picked up by the grease.

[i] Verify that slave piston now drops to the bottom of the bore under its own weight or light pressure. If not, repeat step5[a] through step 5[h].

[j] Reassemble the slave piston of the brake with step1 through step 3.

[k] Adjust slave piston lash, refer to section 1.30.8.1.

6. Install the master piston and pushrod into the bore. See Figure 1-520.
7. Install new spring. See Figure 1-520.
8. Install new master piston retainer over spring. See Figure 1-520.
9. While depressing master piston retainer, insert the new master piston retaining ring with snap ring pliers. See Figure 1-520.

NOTE:
Rotate the retaining rings 90 degrees to ensure that the ring is seated in the groove.

10. Repeat step6 through step 9for installing the remaining master pistons.
11. Flip housing over.

 Copyright © 2004 DETROIT DIESEL CORPORATION

12. Install the adjusting screw and locknut. See Figure 1-520.

NOTE:
For Model 790 Jake Brakes® install the J-Lash™ assembly screw. For Model 795 Jake Brakes® install the solid screw.

NOTE:
Do not tighten the locknut at this time.

13. Repeat step12 for installing the remaining adjusting screws and locknuts.
14. Slip the new control valve into the bore. See Figure 1-520.
15. Install new control valve springs. See Figure 1-520.
16. Place new control valve cover over springs followed by the retaining ring. See Figure 1-520.
17. Press down on the valve control cover with an appropriate diameter rod and set the retaining ring into the groove with snap ring pliers. See Figure 1-520.

NOTE:
Rotate the retaining ring 90 degrees to ensure that the retaining ring is seated in the groove.

18. Repeat step14 through step 17 for installing the remaining control valves.

(Rev. 2004) *All information subject to change without notice.*
6SE483 0401 Copyright © 2004 DETROIT DIESEL CORPORATION

19. Install the lower (smallest) solenoid seal ring into the bottom of the solenoid valve bore. See Figure 1-520and see Figure 1-522.

NOTE:
Coat the seals with clean engine oil prior to assembly.

NOTE:
New upper seal rings can be identified by a yellow stripe.

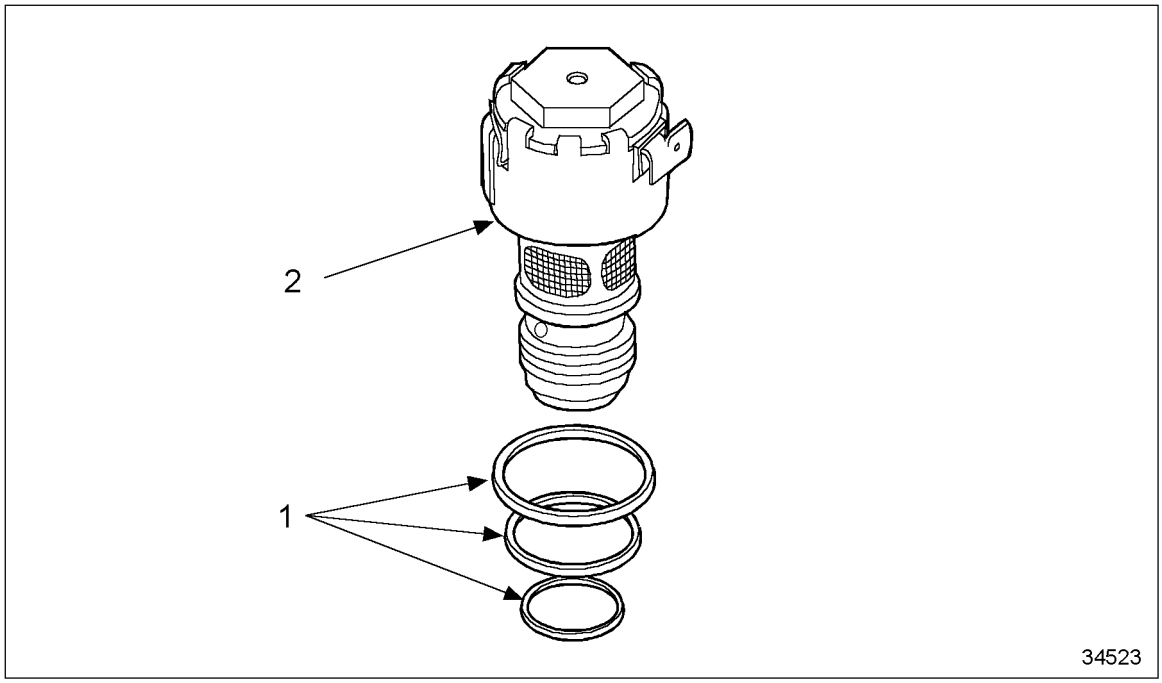

1. Seal Rings (3)
2. Solenoid Valve

Figure 1-522 Installation of Solenoid Valve Seal Rings

20. Install the upper and center seal rings on the solenoid valve. See Figure 1-520 and see Figure 1-522.

NOTE:
Coat the seals with clean engine oil prior to assembly.

NOTICE:
Avoid cutting or twisting the seal rings while installing solenoid. Improper installation could result in poor engine brake performance.

21. Ensure the solenoid seal rings are seated properly.
22. Using a 3/4 in.-6 point socket and extension; carefully screw in the solenoid valve into the housing without unseating the solenoid seal rings. Torque to 20 N·m (15 lb·ft). See Figure 1-520.

 Copyright © 2004 DETROIT DIESEL CORPORATION

23. Repeat step19 through step 22 for installing the remaining solenoid valves.

1.30.8 Installation of Model 790/795 Jake Brake® Assembly

The installation procedures for the model 790/795 Jake Brake® assemblies differ slightly from the former engine brakes. Two brake housings are used, instead of three, and spacer bars are not required. Install the model 790/795 Jake Brake® assemblies as follows:

NOTICE:

To prevent cylinder head from cracking when bolts are torqued, remove the oil from the bolt holes.

CAUTION:

To avoid injury from flying debris when using compressed air, wear adequate eye protection (face shield or safety goggles) and do not exceed 40 psi (276 kPa) air pressure.

1. Attach a length of tubing to an air gun nozzle and blow out the oil from the housing-hold down bolt holes.

NOTE:
Cover the holes with hand towels to minimize oil spray.

2. Place the engine brake housings on the rocker shafts and spacer tubes with the solenoids on the camshaft side of the engine and the slave pistons over the exhaust valves.
3. Lubricate each hold-down capscrew with clean engine oil.

(Rev. 2004) *All information subject to change without notice.*
6SE483 0401 Copyright © 2004 DETROIT DIESEL CORPORATION

4. Install three 170 mm long capscrews on the solenoid side of the brake. See Figure 1-523.

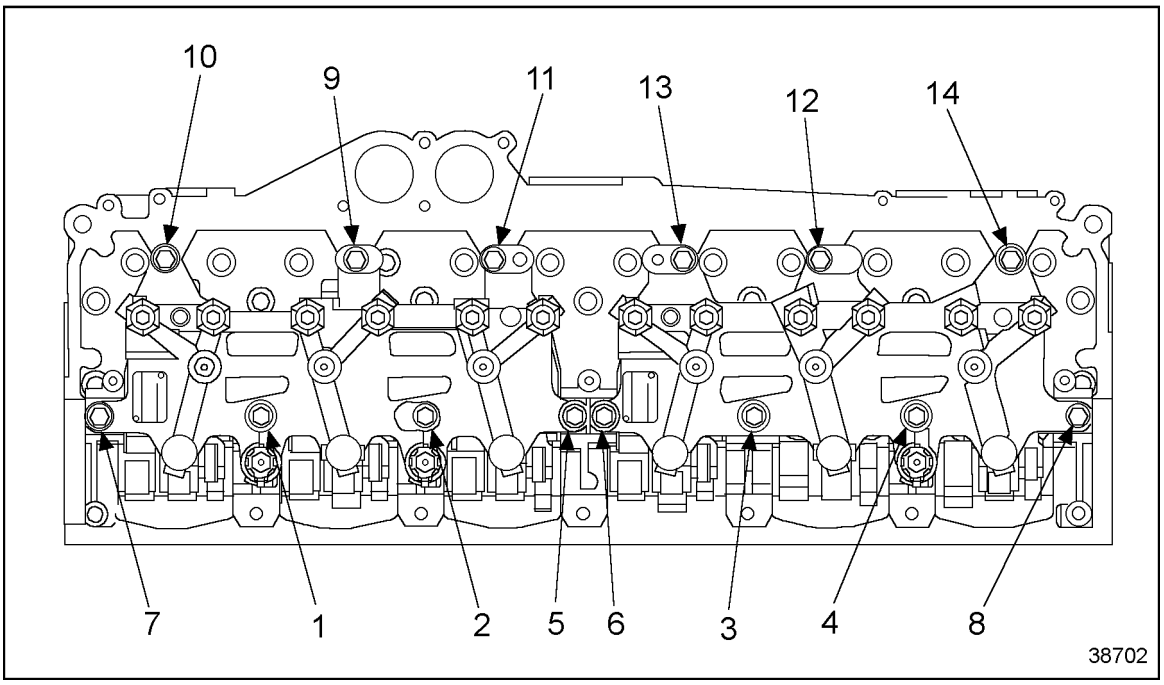

Figure 1-523 Housing Hold-Down Bolt Locations

NOTICE:
Installing 170 mm capscrews on the exhaust side of the engine can result in serious engine damage.

5. Install three 140 mm long capscrews on the exhaust side of the engine. See Figure 1-523.
6. Before tightening the capscrews, move the housing from side to side. Position housing in the center of the range of motion.
7. Tighten the capscrews in the following sequence for one engine brake assembly: (See Figure 1-523.)
   [a] Starting with the middle capscrew, torque the three capscrews on the camshaft side of the engine to 55 N·m (40 lb·ft).
   [b] Starting with the middle capscrew, torque the three bolts on the exhaust manifold side of the engine to 55 N·m (40 lb·ft).
   [c] Torque the nut at the end of the rocker shaft to 55 N·m (40 lb·ft).
   [d] Repeat the tightening sequence, torquing all capscrews to 136 N·m (100 lb·ft).
   [e] Repeat step7[a] through step 7[d] for the other engine brake.
8. Connect the lead wires to the solenoid valves passing the wires through the wire clips.

 Copyright © 2004 DETROIT DIESEL CORPORATION

9. Torque solenoid screw to 1 N·m (9 lb·in.).

NOTE:
Pull the lead wires away from the housing.

1.30.8.1 Set Slave Piston Lash

The slave piston lash *must*be set after Jake Brake® housings are installed. Adjustments must be made with the engine stopped and cold with the oil temperature at 60°C (140°F) or below. Exhaust valves on the cylinder *must*be in the *closed* position (rocker arm roller should be on the base circle of the camshaft).

NOTICE:
The slave piston adjustment procedure *must* be followed exactly. Failure to properly adjust Jake Brakes® will result in inefficient engine brake performance and may lead to severe engine or Jake Brake® damage.

Adjust Model 790/795 Jake Brake® slave piston lash as follows:

1. Turn in the adjusting screw until the solid side of the slave piston bridge assembly, contacts the exhaust valve and the valve springs begin to compress, then turn in one additional turn.

NOTE:
Wait at least 30 seconds for oil to be purged from the J-Lash adjusting screw. If oil is below room temperature (below 16 °C [60°F]), wait at least two minutes for oil to be purged from the J-Lash adjusting screw.

(Rev. 2004) *All information subject to change without notice.*
6SE483 0401 Copyright © 2004 DETROIT DIESEL CORPORATION

NOTICE:
Serious engine damage may occur from improper lash setting.

2. Using a 3/16 in. hex wrench, back out the adjusting screw ONLY until the correct size feeler gage (listed in Table 1-11) can be inserted between the solid side of the slave piston bridge assembly and the exhaust valve. See Figure see Figure 1-524.

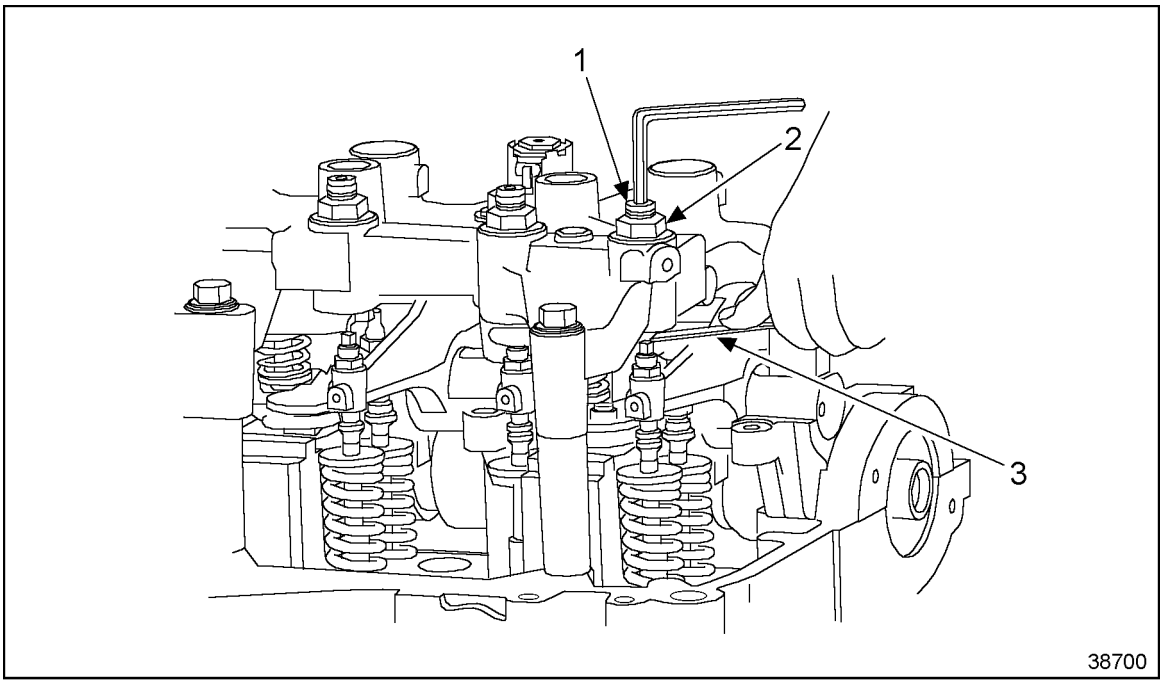

1. J-Lash Adjusting Screw
2. Slave Piston
3. Exhaust Valve Spring

Figure 1-524 Setting Slave Piston Lash

3. Adjust the adjusting screw so that a light drag is felt on the feeler gage. Do not back out the adjusting screw more than required to obtain a light drag on the feeler gage. Use a screwdriver to hold the adjusting screw in place and torque the lock nut to 38 N·m (336 lb·in.). See Figure 1-524.

NOTE:
If the J-Lash adjusting screw is backed out until it no longer compresses the slave piston spring, oil will enter the screw and the adjustment will be incorrect. If this occurs, repeat step 2and step 3.

NOTE:
For Model 795 applications, skip to step 4 .

4. Hold the solid adjusting screw in place and torque the locknut to 38 N·m (28 lb·ft).

 Copyright © 2004 DETROIT DIESEL CORPORATION

5. Recheck lash settings. If lash setting is incorrect, repeat step 1 through step 3.

NOTE:
Once the engine brake has been run, you will not be able to check the engine brake adjustments for engines using J-Lash™ adjusting screws. This is because of oil retained in the J-Lash™ adjusting screw. If unsure of the adjustment, repeat step 1 and step 4.

6. Repeat step 1 through step 5 for the remaining slave piston on the same cylinder.
7. Repeat step 1 through step 5 for the remaining cylinders.

CAUTION:

To avoid injury, wear a face shield or goggles.

CAUTION:

To avoid injury from fire, contain and eliminate leaks of flammable fluids as they occur. Failure to eliminate leaks could result in fire.

8. Install all remaining components that were removed for this procedure.

NOTE:
Ensure that all wires are away from moving parts.

9. Complete the installation by installing the rocker cover. Refer to section 1.6.
10. Start and drive the vehicle to verify proper Jake Brake® performance.

(Rev. 2004) *All information subject to change without notice.*
6SE483 0401 Copyright © 2004 DETROIT DIESEL CORPORATION

1.A ADDITIONAL INFORMATION

Description **Page**

SHOP NOTES 1-664
Cylinder Block Liner Boring 1-664
Checking Bearing Clearance 1-664
CRANKSHAFT REMANUFACTURING PROCEDURES 1-666
Crankshaft Grinding 1-666
Inspection 1-666
MACHINING OPERATIONS 1-674
Main and Connecting Rod Journals 1-674
Grinding Connection Rod Journals (Pins) 1-675
Grinding Main Bearing Journals 1-676
Other Machining Operations: 1-676
After-Grinding Inspection 1-682
GLOSSARY 1-683
Glossary Terms 1-683
ENGINE PLUG AND DOWEL CHARTS 1-684
1991 Model Year and Later 1-684
Pre-1991 Engines 1-689
SPECIFICATIONS 1-696
Table of Specifications, New Clearances, and Wear Limits 1-696
Exceptions to Standard Fastener Torque Specifications 1-709

 Copyright © 2004 DETROIT DIESEL CORPORATION

SHOP NOTES

Shop notes contains information on checking bearing clearances, the crankshaft remanufacturing procedures and a glossary.

Cylinder Block Liner Boring

Further information will be printed as it is developed.

Checking Bearing Clearance

A strip of soft plastic squeezed between the crankshaft journal and the connecting rod bearing or main bearing may be used to measure the bearing clearances.

The strip is a specially molded plastic "wire manufactured commercially and is available in three sizes and colors. Type PG-1 (green) has a clearance range of 0.0254-0.0762 mm (0.001 -0.003 in.). Type PR-1 (red) has a range of 0.0508-0.1524 mm (0.002 -0.006 in.). Type PB-1 (blue) has a range of 0.1016-0.2286 mm (0.004 -0.009 in.).

The plastic strip may be used for checking the bearing clearances as follows:

1. Remove the bearing cap and wipe the oil from the bearing shell and the crankshaft journal to be checked.

NOTE:
Check the main bearing clearances with the weight of the crankshaft supported by a jack under the counterweight adjoining the bearing being checked. If the engine is positioned with the main bearing caps supporting the crankshaft and flywheel, an erroneous reading could result.

(Rev. 2004) *All information subject to change without notice.*
6SE483 0401 Copyright © 2004 DETROIT DIESEL CORPORATION

2. Place a piece of plastic strip the full width of the bearing shell, about 1/4 inch off center. See Figure 1-525.

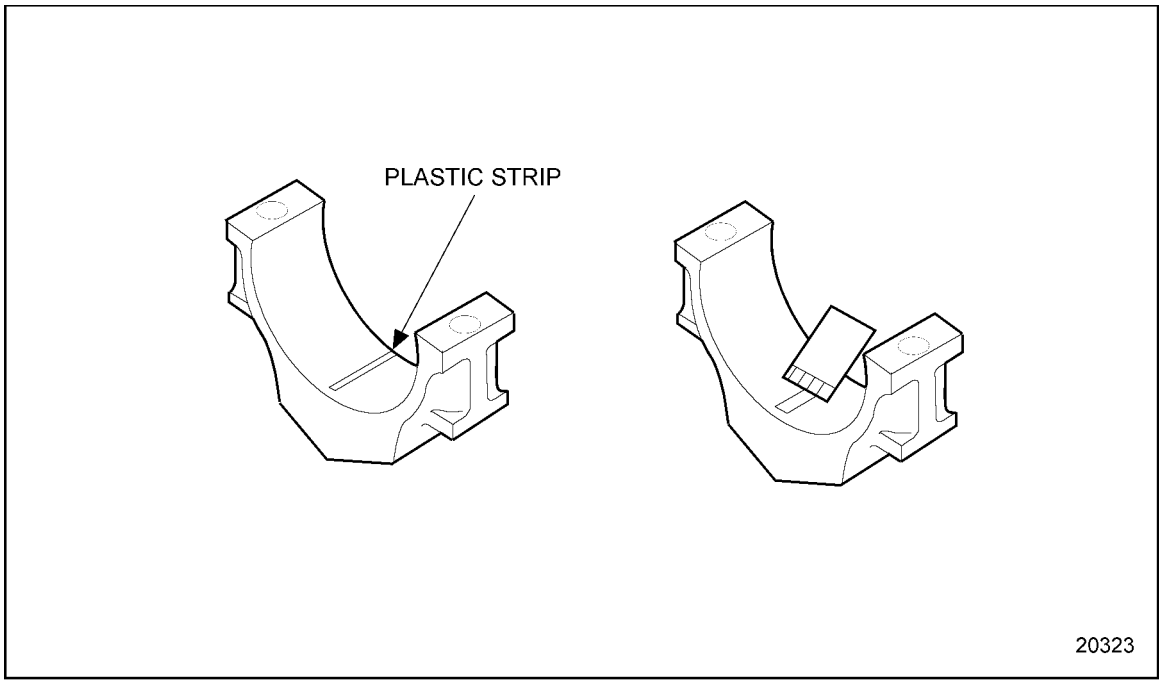

Figure 1-525 Using Plastic Strip to Measure Bearing-to-Crankshaft Clearance

3. Install the bearing cap. Torque the bolts to 470-530 N·m (347-391 lb·ft).
4. Remove the bearing cap. The flattened plastic strip will be found adhering to either the bearing shell or the crankshaft.
5. Compare the width of the flattened plastic strip at its widest point with the graduations on the envelope. See Figure 1-525. The value within the graduation on the envelope indicates the bearing clearance in thousands of an inch. To obtain metric specifications:
   [a] Multiply the reading obtained (in thousandths) by 25.4. Taper may be indicated when one end of the flattened plastic strip is wider than the other.
   [b] Measure each end of the plastic strip. The difference between the two readings is the approximate amount of taper.

 Copyright © 2004 DETROIT DIESEL CORPORATION

CRANKSHAFT REMANUFACTURING PROCEDURES

This section describes the procedures used to remanufacture crankshafts.

Crankshaft Grinding

In addition to the standard size main and connecting rod bearings, 0.254 mm, 0.508 mm and 0.762 mm (approximately 0.010 in., 0.020 in., and 0.030 in.), undersize bearings listed in Table 1-12are available.

Crankshafts which exhibit surface irregularities may be reground to utilize these bearings. Listed in Table 1-12, are guidelines to determine if the crankshaft is suitable for regrinding:

Bearing Size	11 & 12L Connecting Rod Journal Diameter	14L Connecting Rod Journal Diameter	Main Bearing Journal Diameter
Standard	85.000 - 84.975 mm (3.346 in. - 3.345 in.)	95.000 - 94.975 mm (3.740 in. - 3.739 in.)	125.000 - 124.975 mm (4.921 in. - 4.920 in.)
0.254 mm (0.010 in.) Undersize	*84.750 - 84.775 mm (3.336 in. - 3.337 in.)	94.750 - 94.775 mm (3.730 in. - 3.731 in.)	*124.750 - 124.725 mm (4.911 in. - 4.910 in.)
0.508 mm (0.020 in.) Undersize	*84.500 - 84.475 mm (3.327 in. - 3.326 in.)	94.500 - 94.475 mm (3.720 in. - 3.719 in.)	*124.500 - 124.475 mm (4.902 in. - 4.901 in.)
0.762 mm (0.030 in.) Undersize	*84.250 - 84.225 mm (3.317 in. - 3.316 in.)	94.250 - 94.225 mm (3.711 in. - 3.709 in.)	*124.250 - 124.225 mm (4.892 in. - 4.891 in.)

* Dimension of reground crankshaft.

Table 1-12 Crankshaft Journal Specifications

Inspection

Perform the following steps for part inspection:

1. Determine if the crankshaft is from an 11.1 liter engine or a 12.7 liter engine. Listed in Table 1-13are the forging number history for Series 60 crankshafts.

Model	Series 60 Crankshaft Forging Part Number	Part Number History Year Released	Fillet Finishing
11.1 Liter	8929238	1986	Induction Hardened
12.7 Liter	8929239	1986	Induction Hardened
14 Liter	23522887	1998	Induction Hardened

Table 1-13 Crankshaft Part Number History

2. Inspect connecting rod and main bearing journals for discoloration due to excessive overheating from bearing failure.

NOTE:
Crankshafts with discoloration are not acceptable for rework.

(Rev. 2004) *All information subject to change without notice.*
6SE483 0401 Copyright © 2004 DETROIT DIESEL CORPORATION

3. Inspect keyway conditions using width gages and micrometers. Compare with the specifications. See Figure 1-526.

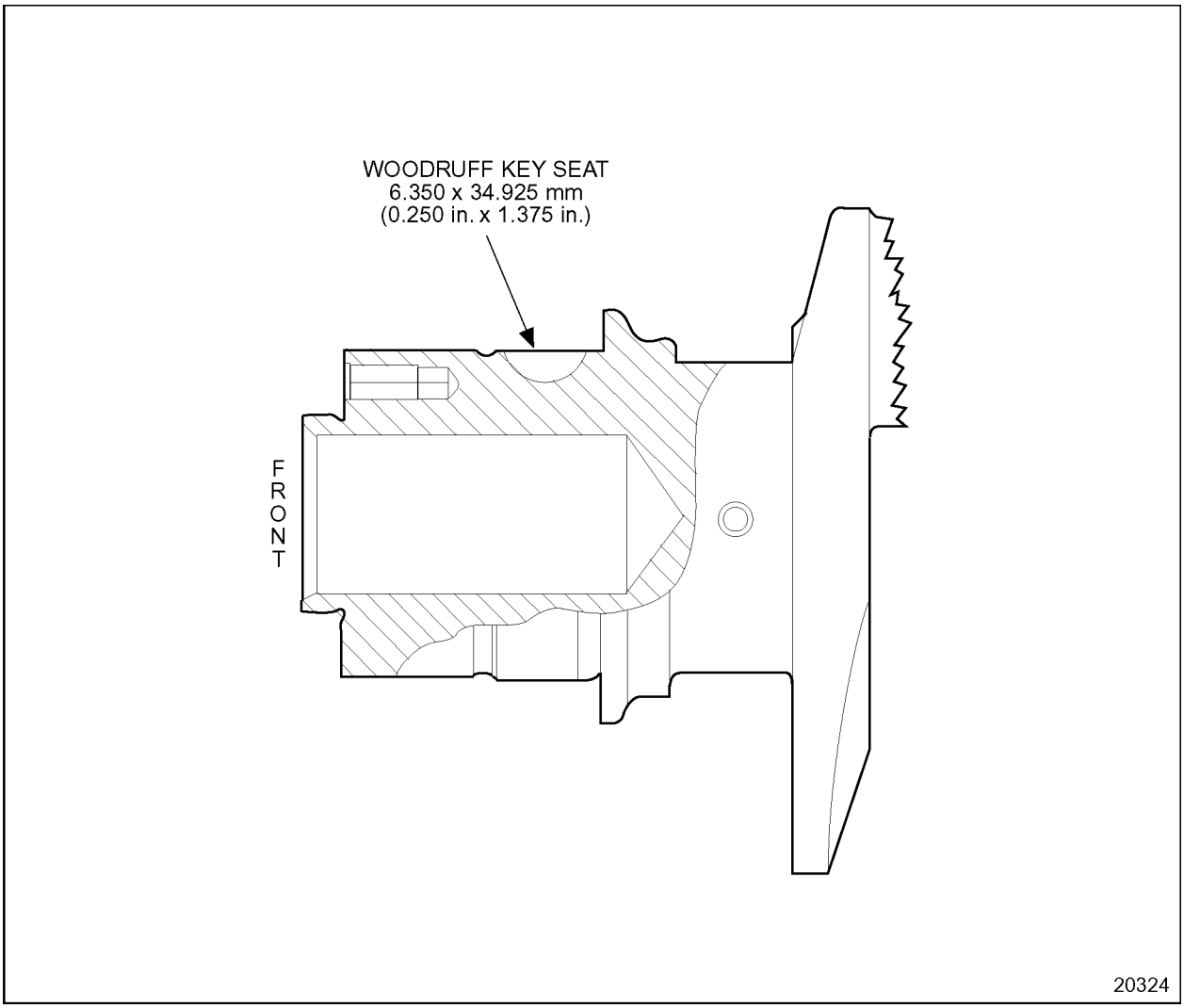

Figure 1-526 Standard Crankshaft Keyway Dimensions

 Copyright © 2004 DETROIT DIESEL CORPORATION

4. Inspect flange bolt holes visually and determine if any necessary repairs can be made by chasing threads or installing heli-coil(s).
5. Regardless of seal area wear condition, a new sleeve and seal must be installed.
6. Read and record all "bearing" total indicator reading (TIR) measurements with the crankshaft mounted in vee blocks. Listed in Table 1-14 are TIR limits.

NOTE:
Run-out tolerance listed in Table 1-14are given for guidance when regrinding crankshaft. When the run-out on adjacent journals is in the opposite direction, the sum must not exceed 0.076 mm (0.003 in.) total indicator reading. When the run-out on adjacent journals is in the same direction, the difference must not exceed 0.076 mm (0.003 in.) total indicator reading.

Journals Supported On	Journals Measured	Maximum Run-Out (Total Indicator Reading)
No. 1 and No. 7	No. 2 and No. 6	0.076 mm (0.003 in.)
No. 1 and No. 7	No. 3 and No. 5	0.127 mm (0.005 in.)
No. 1 and No. 7	No. 4	0.152 mm (0.006 in.)

Table 1-14 Bearing Total Indicator Reading (TIR) Specifications

7. Whether run-out on adjacent journals is in the same or opposite directions, the sum shall not exceed 0.076 mm (0.003 in.) TIR.
8. When high spots of run-out adjacent journals are at right angles to each other, the sum shall not exceed 0.10 mm (0.004 in.) TIR or 0.05 mm (0.002 in.) on each journal.

(Rev. 2004) *All information subject to change without notice.*
6SE483 0401 Copyright © 2004 DETROIT DIESEL CORPORATION

9. In the event of bearing seizure, bearing overlay must be removed. Check the width of journals to determine whether the sidewalls can be reground. See Figure 1-527 for location of crankshaft dimensions. Crankshaft specifications are listed in Table 1-15.

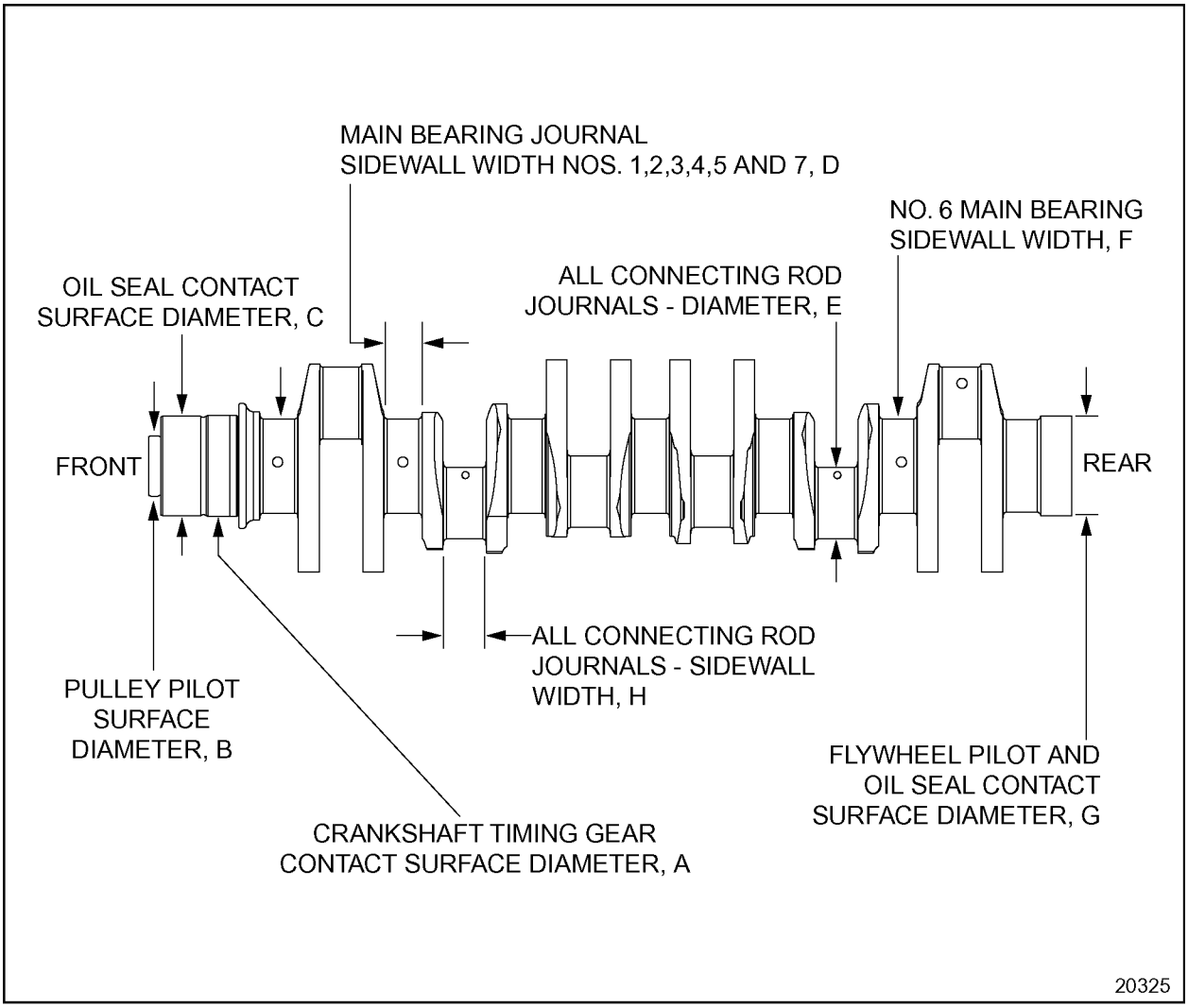

Figure 1-527 Standard Crankshaft Dimensions

 Copyright © 2004 DETROIT DIESEL CORPORATION

Location	Diameter, mm (in.)
A	11.1 L 132.970-133.000 mm (5.235-5.236 in.) 12.7 L 133.670-133.770 mm (5.263-5.264 in.)
B	80.19-80.22 mm (3.157-3.158 in.)
C	131.72-131.78 mm (5.185-5.188 in.)
D	49.35-49.65 mm (1.943-1.955 in.)
E (11 & 12 L)	84.975-85.000 mm (3.345-3.346 in.)
E (14 L)	94.975-95.000 mm (3.742-3.743 in.)
F	49.45-49.55 mm (1.947-1.950 in.)
G	131.72-131.78 mm (5.186-5.188 in.)
H	55.77-56.07 mm (2.196-2.208 in.)

Table 1-15 Crankshaft Specifications

10. Visually inspect the entire crankshaft for any serious deviations from normal wear patterns, cracks, nicks or other damage.
11. If the crankshaft has been ground undersize prior to present receiving inspection, check fillets, thrust, and all widths to determine whether or not enough stock remains to warrant regrinding. See Figure 1-527for location of crankshaft dimensions. Listed in Table 1-16are crankshaft remanufacturing tolerances.

(Rev. 2004) *All information subject to change without notice.*
6SE483 0401 Copyright © 2004 DETROIT DIESEL CORPORATION

Crankshaft Specifications	Minimum	Maximum	Tolerance
Journal Diameter - Main Bearing	124.975 mm (4.920 in.)	125.000 mm (4.921 in.)	0.025 mm (0.001 in.)
Journal Diameter - Connecting Rod Bearing	84.975 mm (3.345 in.)	85.000 mm (3.346 in.)	0.025 mm (0.001 in.)
14L Journal Diameter - Connecting Rod Bearing	94.975 mm (3.742 in.)	95.000 mm (3.743 in.)	0.025 mm (0.001 in.)
Journal Out-of-Round - Main Bearing	-	0.015 mm (0.0006 in.)	0.015 mm (0.0006 in.)
Journal Out-of-Round - Connecting Rod Bearing	-	0.010 mm (0.0004 in.)	0.010 mm (0.0004 in.)
Journal Taper - Main Bearing - Full Length	-	0.013 mm (0.0005 in.)	0.013 mm (0.0005 in.)
Journal Taper - Connecting Rod - Full Length	-	0.010 mm (0.0004 in.)	0.010 mm (0.0004 in.)
Journal Taper Connecting Rod Half - Length	-	0.005 mm (0.0002 in.)	0.005 mm (0.0002 in.)
Gear Fit Run-out TIR (Total Indicated Reading)	-	0.030 mm (0.0012 in.)	0.030 mm (0.0012 in.)
Journal Alignment - Main and Connecting Rod - Per Length of Pin	-	0.012 mm (0.0005 in.)	0.012 mm (0.0005 in.)
Axial Profile Slope - Main - Full Length	-	0.008 mm (0.0003 in.)	0.008 mm (0.0003 in.)
Axial Profile Slope - Mains Per 5.0 mm (0.197 in.) of Length	-	0.006 mm (0.00024 in.)	0.006 mm (0.00024 in.)
Axial Profile Slope - Connecting Rod Journals - Full Length	-	0.006 mm (0.0002 in.)	-
Axial Profile Slope - Connecting Rod Journals - Per 5.0 mm (0.197 in.) of Length	-	0.003 mm (0.0001 in.)	-
Main and Connecting Rod Fillet Radius Main and Connecting Rod Fillet Radius	3.5 mm (0.1378 in.)	4.0 mm (0.1575 in.)	-
Surface Finish - Main and Connecting Rod Journals	-	0.3 µ m 12 AA	0.3 µ m 12 AA
Surface Finish - Thrust Wall	-	0.4 µ m 16 AA	0.4 µ m 16 AA
Surface Finish - Oil Seal Area	0	2.0 µ m 80 AA	2.0 µ m 80 AA
Journal Hardness (Rockwell C)	47 Rc	55 Rc	8 Rc
Crankshaft Dynamic Balance - (Ounce - Inch)	-	1.5	1.5
Main and Connecting Rod Journal Alignment Per Length of Pin	-	0.012 mm (0.0004 in.)	-
Crankshaft - Convex	-	0.013 mm (0.0005 in.)	0.043 mm (0.0017 in.)
Butt Face Concave	-	0.03 mm (0.0011 in.)	0.043 mm (0.0017 in.)

 Copyright © 2004 DETROIT DIESEL CORPORATION

Crankshaft Specifications	Minimum	Maximum	Tolerance
Pin Width	55.77 mm (2.196 in.)	56.07 mm (2.208 in.)	0.30 mm (0.012 in.)
Timing Gear Diameter (must maintain 0.003 -0.005 in. press fit)	133.67 (5.263 in.)	133.70 mm (5.264 in.)	0.030 mm (0.0012 in.)

Table 1-16 Series 60 Crankshaft Remanufacturing Tolerances

12. Journal O.D. score marks must be:
    [a] Circumferential-not axial.
    [b] Maximum of 0.254 mm (0.010 in.) wide.
    [c] At least 3.175 mm (0.125 in.) from fillet tangent point.
    [d] Smooth, no proud metal.
    [e] Maximum of one mark per journal.
13. No journal dimpling permitted for removal of defects.
14. Nicks, dents or pits in journal O.D. must be 3.175 mm (0.125 in.) maximum diameter, no proud metal, maximum (3) per journal.
15. Pins and bearing journals which exhibit discoloration due to excessive overheating from bearing failure are not acceptable for rework.
16. If one or more main or connecting rod journals require grinding, then grind all of the main journals or all of the connecting rod journals to the same required size.
17. Inspect the hardness of all journals. Crankshafts to be 47-55 Rc.

(Rev. 2004) *All information subject to change without notice.*
6SE483 0401 Copyright © 2004 DETROIT DIESEL CORPORATION

18. Clean the crankshaft as follows:
    [a] Clean all oil passages with a brush. Power probing is recommended.
    [b] Remove all copper, brass and lead, etc., from journal surfaces. Scrub the crankshaft until clean in a detergent bath.
    [c] Extremely rusted shafts can be soaked in hot rust stripper.
    [d] Scrub all webs and counterweights with a wire brush to remove all blackened residue. Use industrial detergent at proper ratios or regular hot degreaser.

NOTICE:
A crack in any vital area of the crankshaft cannot be repaired or removed. That is why magnetic particle inspection of the entire crankshaft before regrinding is mandatory. Crankshafts that are cracked MUST BE SCRAPPED.

19. After a visual inspection, the crankshaft should be magnetically inspected using one of the two following methods:
    [a] Magnetic Particle Method: Refer to section 1.7.2.6.
    [b] Fluorescent Magnetic Particle Method: Refer to section 1.7.2.8.

 Copyright © 2004 DETROIT DIESEL CORPORATION

MACHINING OPERATIONS

The following topics cover machining operations:

Main and Connecting Rod Journals

Main and Connecting Rod Journals:

1. Connecting rod and main bearing journal grinding should be performed with crankshaft rotation opposite to actual engine rotation. See Figure 1-528.

NOTE:
Crankshaft and main journal grinding should be performed with crankshaft rotation opposite to actual engine rotation. While polishing should be performed with the crankshaft rotation in the same direction as engine rotation.

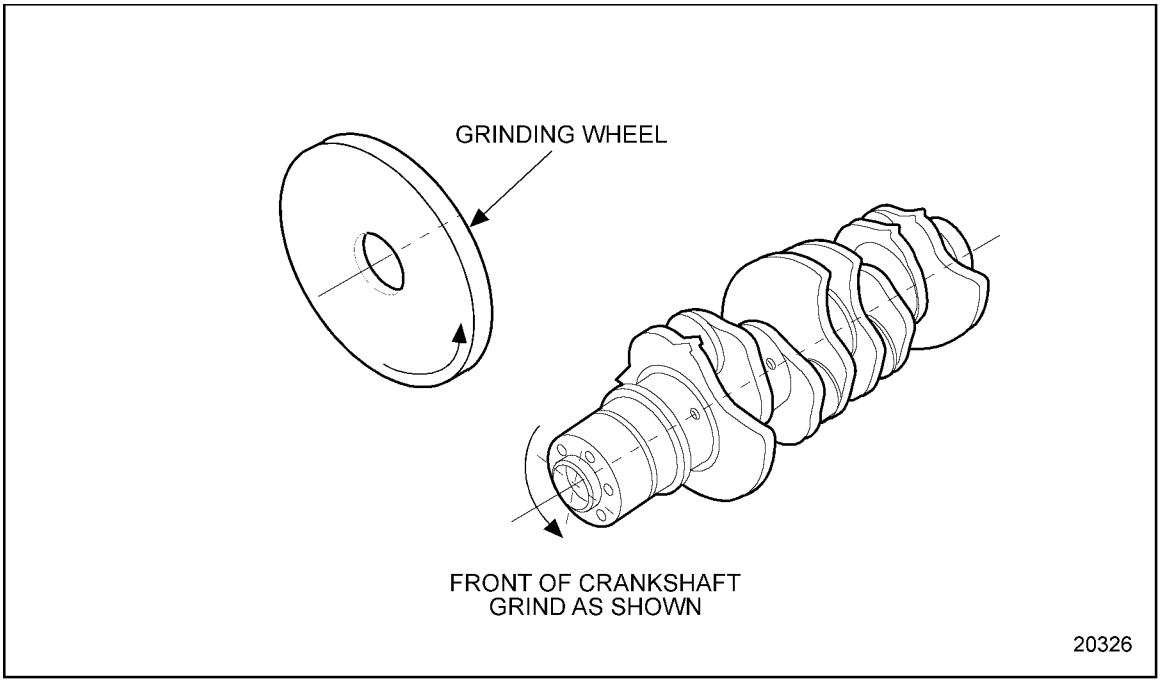

Figure 1-528 Crankshaft Grinding Rotation

2. Crankshaft polishing should be performed with the crankshaft rotation in the same direction as engine rotation.
3. All connecting rod journal fillets must have a 5.75 mm (0.226 in.) radius between the crank cheek and the journal.
4. All connecting rod journal fillets must have a 5.75 mm (0.226 in.) radius between the crank cheek and the journal. All main journal fillets must have a 3.75 mm (0.148 in.) radius between the crank cheek and the journal.
5. No journal may have any sharp grind marks. The fillet must blend smoothly into the journal and the crank cheek and must be free of scratches.

(Rev. 2004) *All information subject to change without notice.*
6SE483 0401 Copyright © 2004 DETROIT DIESEL CORPORATION

6. The radius may be checked with a fillet gage. See Figure 1-529.

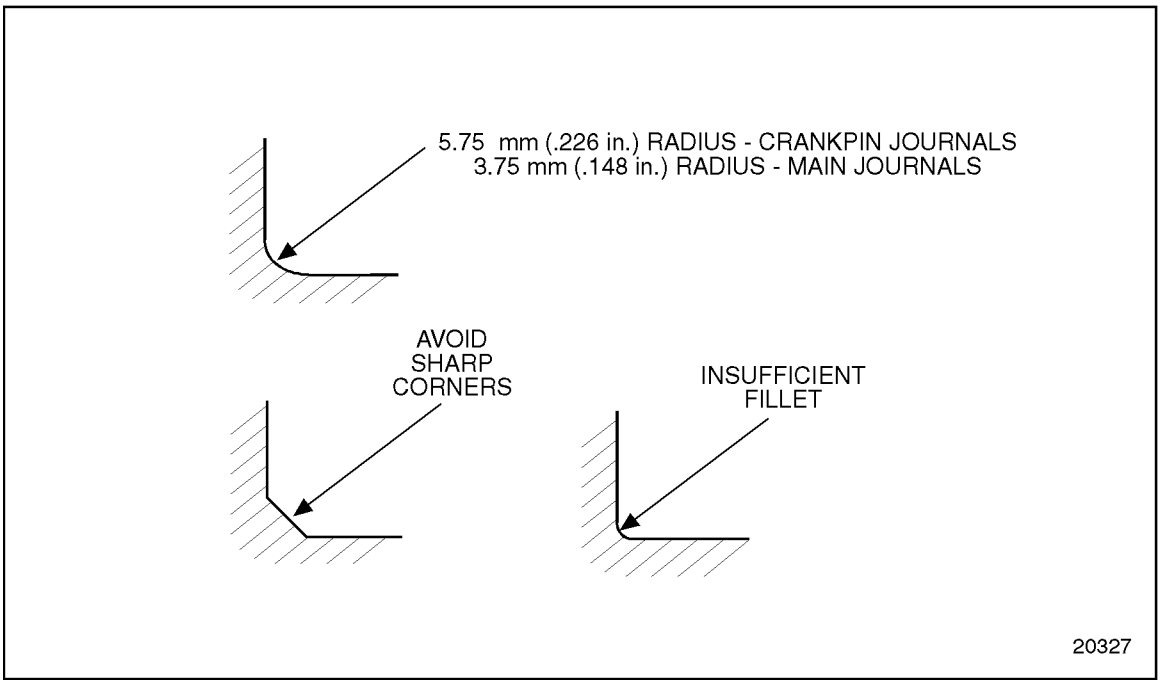

Figure 1-529 Crankshaft Journal Fillets

7. Lobing and Chatter: The number of lobes around the journal circumference, times the average peak to valley lobe height in micrometers, shall not exceed 42 micrometers. Peak to valley excursions exceeding 1.0 micrometers shall be considered lobing or chatter.
8. Excursions can be measured on a circular chart of the circumferential profile.

Grinding Connection Rod Journals (Pins)

Perform the following steps for grinding connection rod journals:

1. Grind the pin O.D. surface to the specified undersize. The undersize conditions are 0.254 mm, 0.508 mm or 0.762 mm (approximately 0.010 in., 0.020 in. or 0.030 in.).
2. ALL connecting rod journals must be ground to the same undersize condition.
3. Journal taper on a radial basis shall not exceed 0.008 mm (0.0003 in.) overall, or exceed 0.004 mm (0.00016 in.) on half-length.

NOTE:
Avoid localized heating, which often produces grinding cracks. Cool the crankshaft generously with coolant while grinding. Do not crowd the grinding wheel into the work.

4. Grind sidewalls wide enough to clean up the basic face surface, not to exceed pin width allowable. See Figure 1-527.
5. If there are deep interruptions, gouges or nicks that do not extend into fillets, smooth the edges with 120 grit emery cloth.

 Copyright © 2004 DETROIT DIESEL CORPORATION

Grinding Main Bearing Journals

Perform the following steps for grinding main bearing journals:

1. Grind the main bearing O.D. surface to the specified undersize. The undersize conditions are 0.254, 0.508 or 0.762 mm (approximately 0.010, 0.020, or 0.030 in.).

NOTE:
Avoid localized heating, which often produces grinding cracks. Cool the crankshaft generously with coolant while grinding. Do not crowd the grinding wheel into the work.

2. ALL main bearing journals must be ground to the same undersize conditions.
3. Journal taper on a radial basis shall not exceed 0.012 (0.0005 in.) overall or exceed 0.006 mm (0.00024 in.) on half-length.

Other Machining Operations:

Perform the following steps for other machining operations:

1. Examine the thrust wall (No. 4 main bearing):
   [a] If the thrust wall surface is scored, scratched or groove worn, the thrust wall must be "bump ground."
   [b] The maximum run-out of the thrust wall is 0.038 mm (0.0015 in.) TIR.

(Rev. 2004) *All information subject to change without notice.*
6SE483 0401 Copyright © 2004 DETROIT DIESEL CORPORATION

[c] If wear is 0.0508 mm (0.002 in.) or more, regrind to restore flatness to the thrust wall. See Figure 1-530.

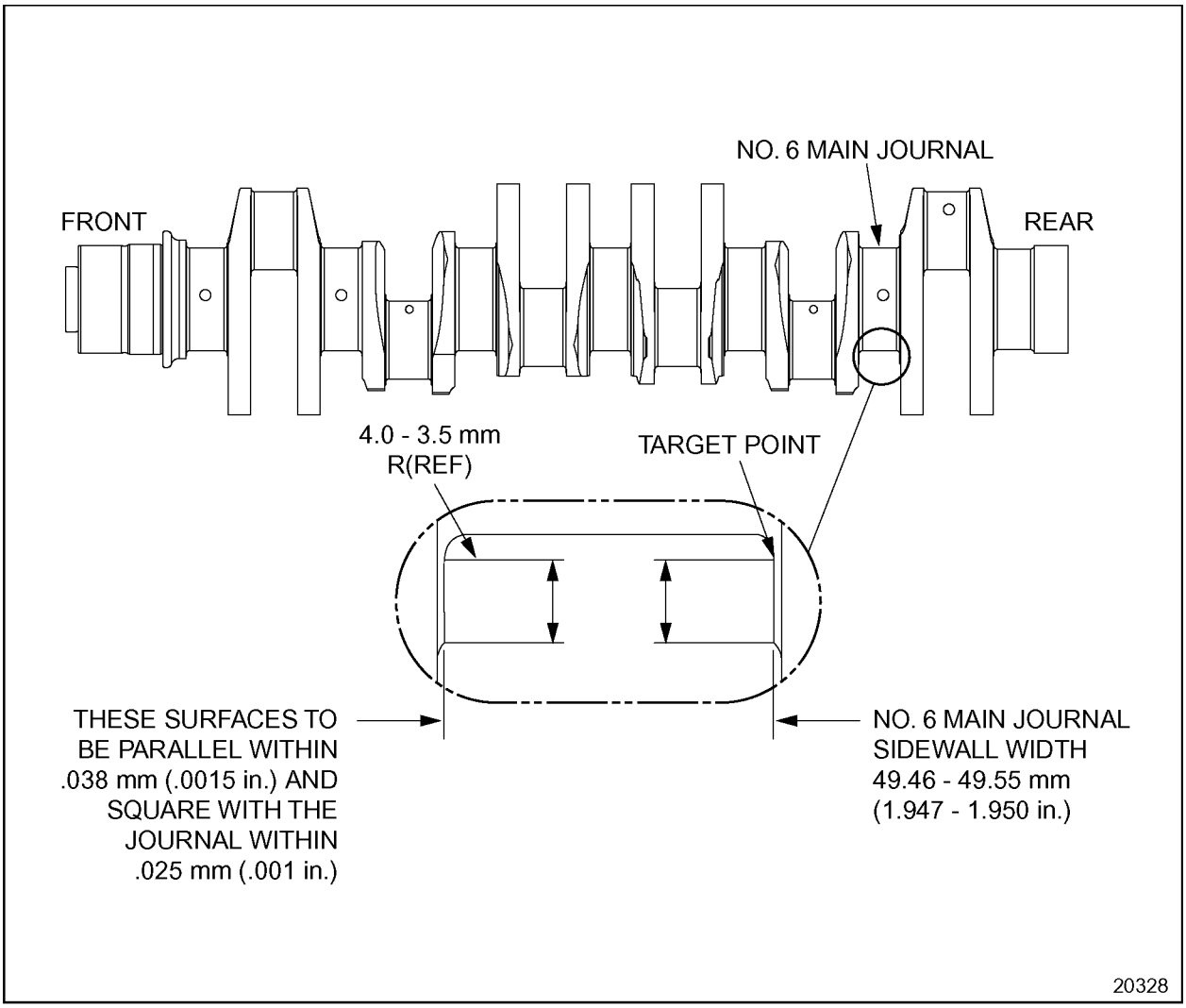

Figure 1-530 No. 6 Main Journal Thrust Wall Dimensions

[d] An oversize thrust wall is to be "bump ground" in multiples of 0.127 mm (0.005 in.), with a maximum of 0.250 mm (0.010 in.) to be removed from each side. Record oversize for installations.

NOTE:
Avoid localized heating, which often produces grinding cracks. Cool the crankshaft generously with coolant while grinding. Do not crowd the grinding wheel into the work.

 Copyright © 2004 DETROIT DIESEL CORPORATION

2. Chamfer all oil holes to remove grinding burrs to the limit shown on illustrations. See Figure 1-531. See Figure 1-532. See Figure 1-533. See Figure 1-534.

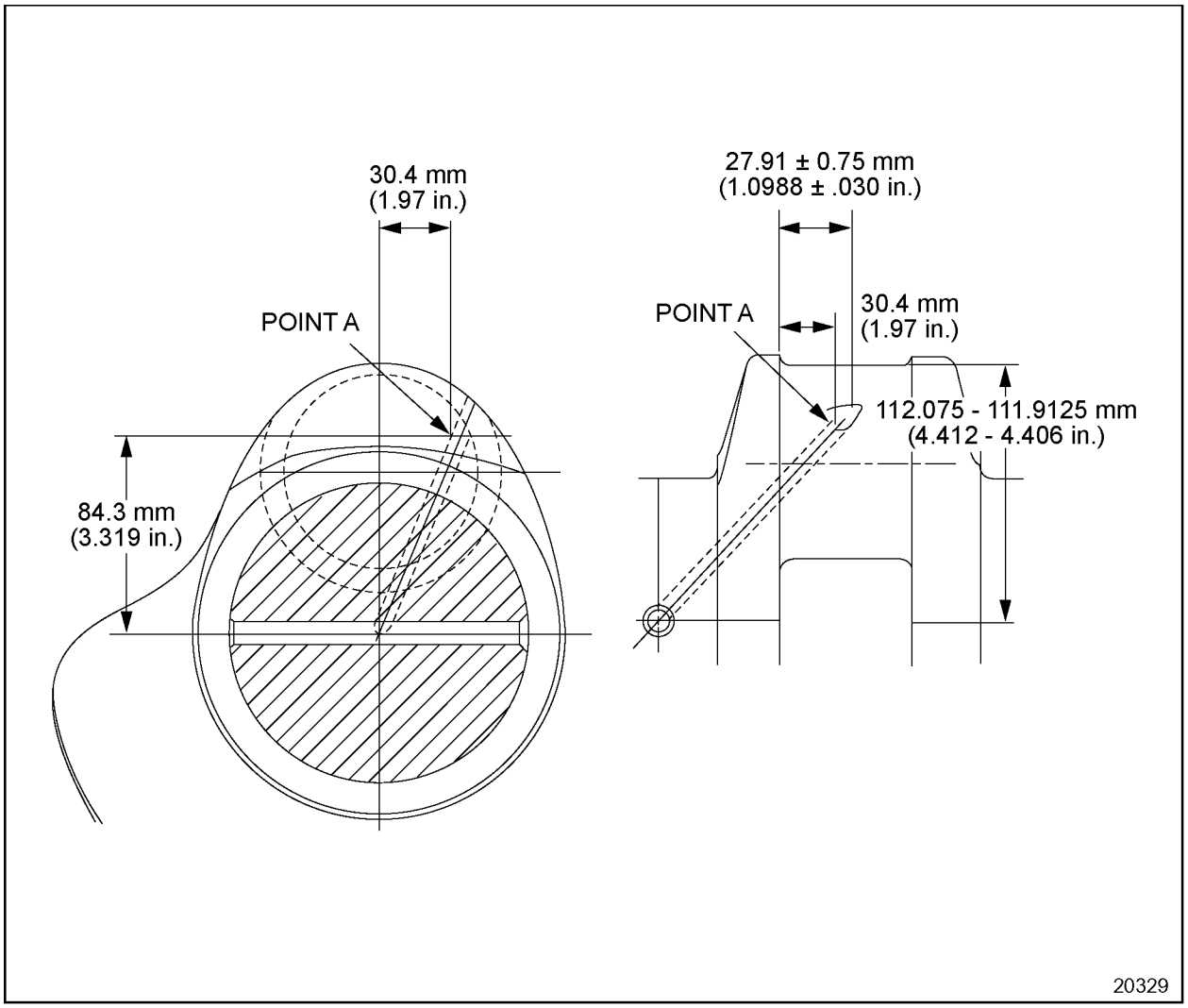

Figure 1-531 Oil Hole Specifications - Connecting Rod Journals - 11.1 L Crankshaft (139 mm stroke)

(Rev. 2004) *All information subject to change without notice.*
6SE483 0401 Copyright © 2004 DETROIT DIESEL CORPORATION

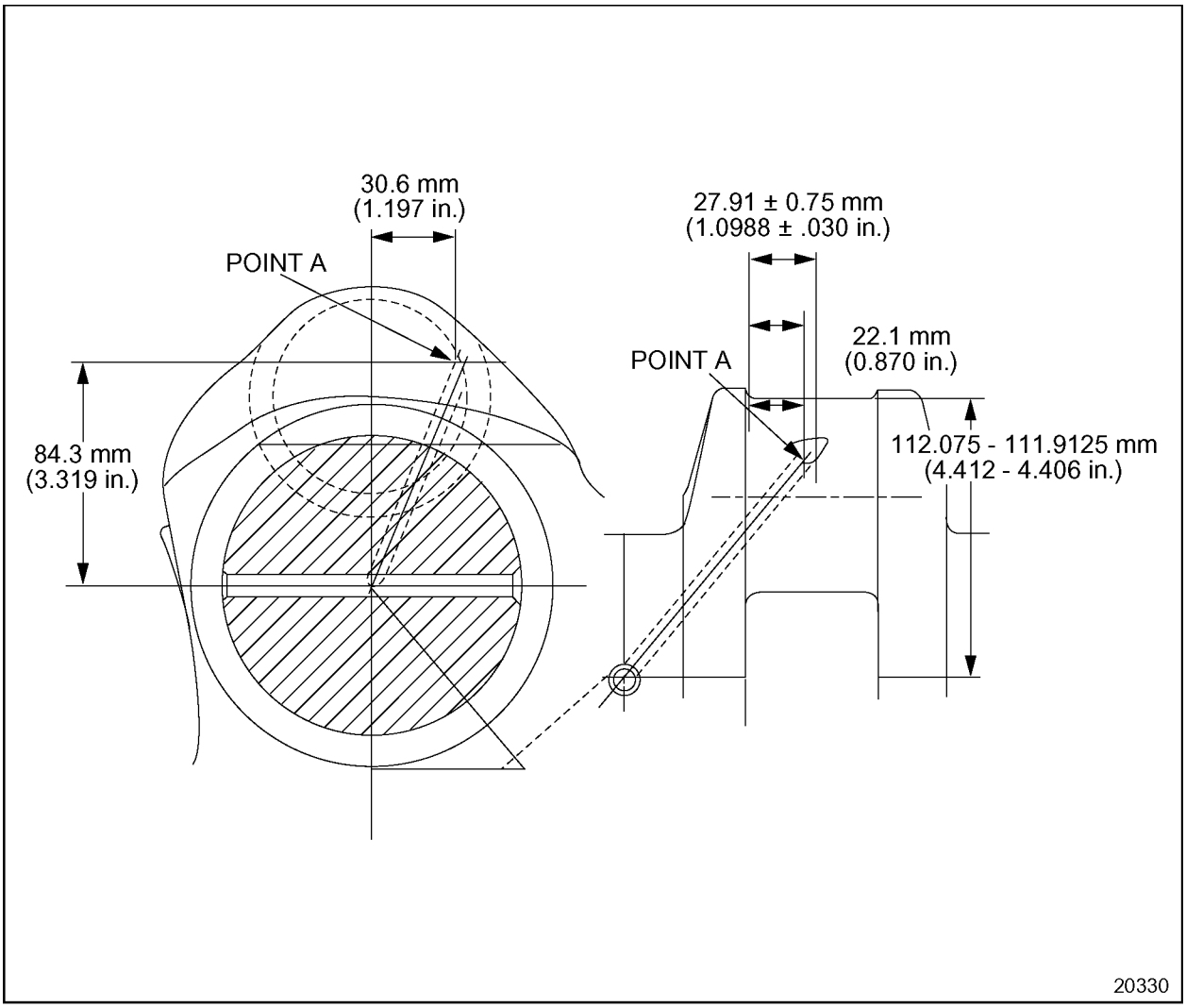

Figure 1-532 Oil Hole Specifications - Connecting Rod Journals - 12.7 L Crankshaft (160 mm stroke)

 Copyright © 2004 DETROIT DIESEL CORPORATION

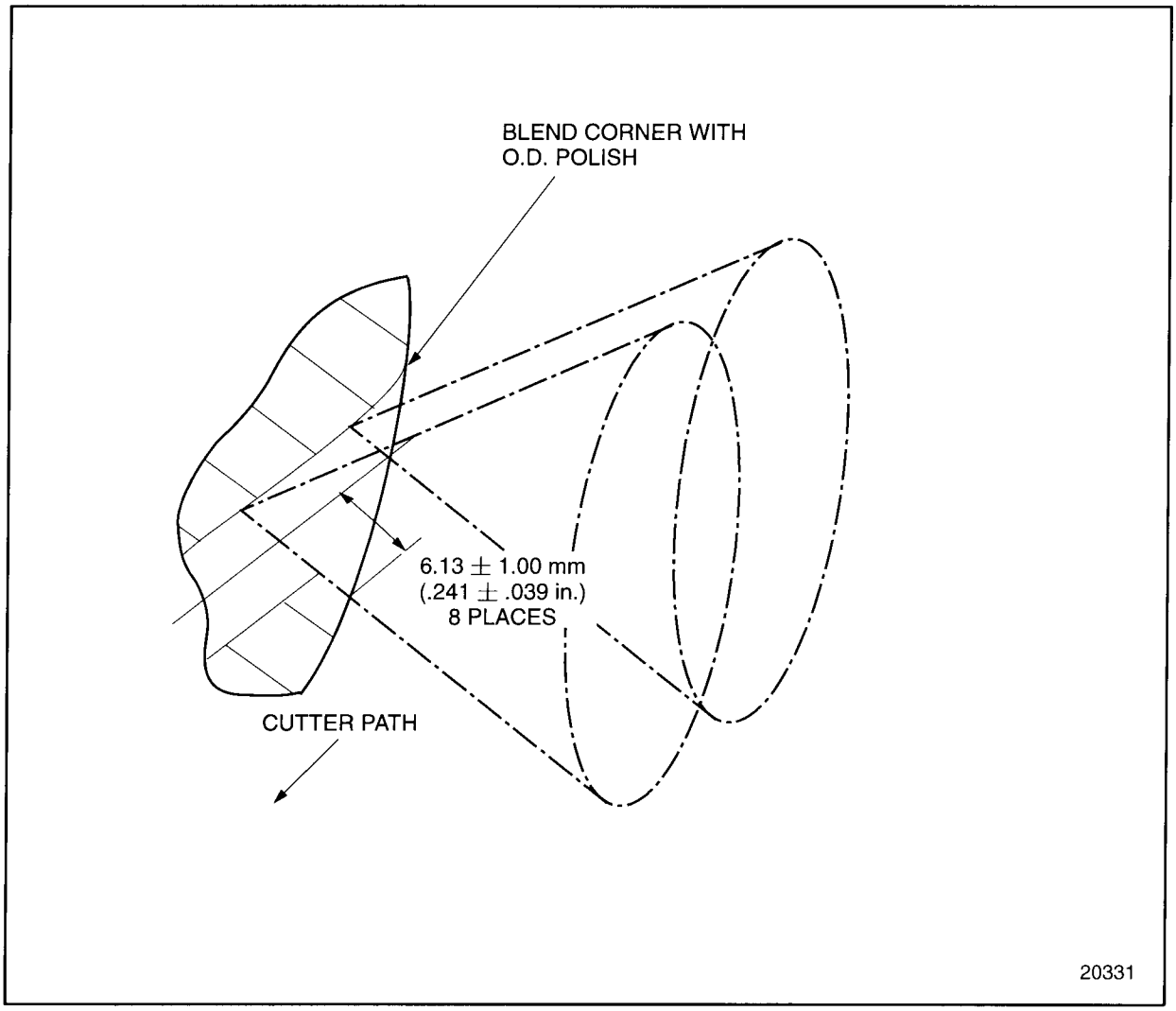

Figure 1-533 Connecting Rod Journal Oil Hole Chamfer Limits

(Rev. 2004) *All information subject to change without notice.*
6SE483 0401 Copyright © 2004 DETROIT DIESEL CORPORATION

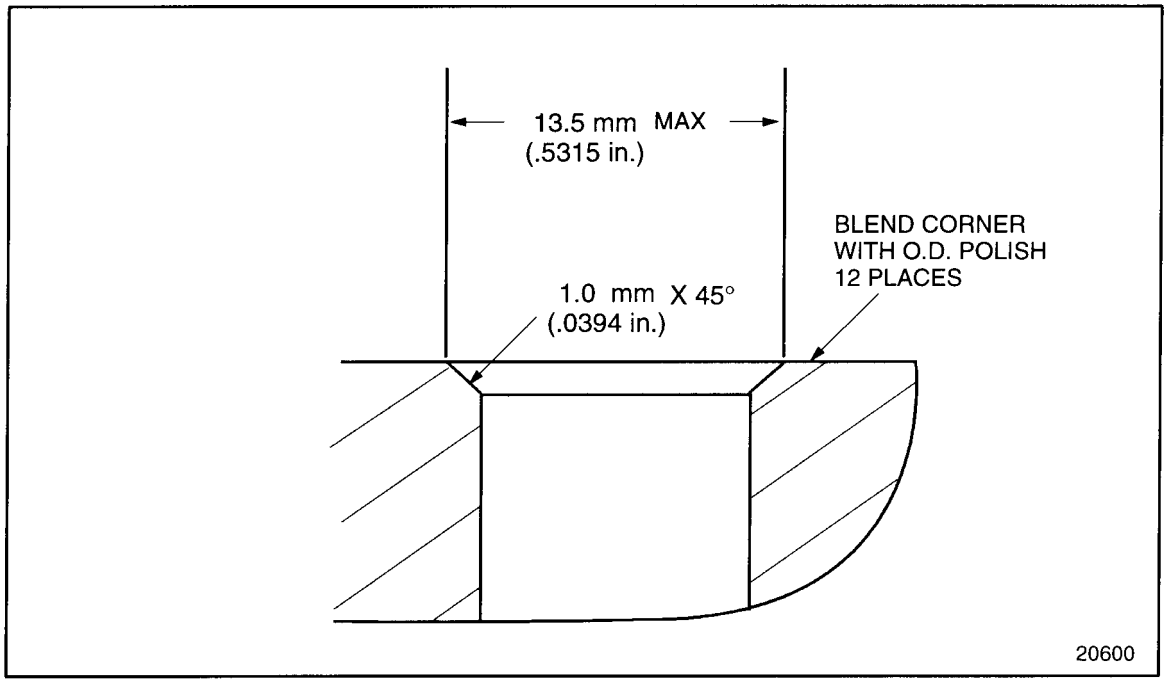

Figure 1-534 Main Journal Oil Hole Chamfer Limits

3. Repair the flywheel and pulley contact faces of the crankshaft to clean up the surface of any nicks, gouges or raised metal. The crankshaft face must be 0.013 mm (0.0005 in.) convex to 0.025 mm (0.001 in.) concave.

 Copyright © 2004 DETROIT DIESEL CORPORATION

After-Grinding Inspection

Perform the following steps for after grinding:

1. Inspect the crankshaft by the magnetic particle method after grinding has been completed to determine whether the grinding operation has produced cracks.
2. Re-tap and check all internal threads with plug gages to determine acceptability. If necessary, heli-coil pulley and flywheel flange bolt holes with the following restrictions: Heli-coil 2 holes maximum per crankshaft end (front or rear). Heli-coil of two adjacent holes at rear (forward end) is not permitted.
3. Demagnetize the crankshaft.
4. Clean the crankshaft and oil passages thoroughly with clean fuel oil.

CAUTION:

To avoid injury from flying debris when using compressed air, wear adequate eye protection (face shield or safety goggles) and do not exceed 40 psi (276 kPa) air pressure.

5. Dry the crankshaft with compressed air.

(Rev. 2004) *All information subject to change without notice.*
6SE483 0401 Copyright © 2004 DETROIT DIESEL CORPORATION

GLOSSARY

The following glossary terms support the Series 60 Engine.

Glossary Terms

AA - ARITHMETICAL AVERAGE: The average total sum of the heights and depths of the ridges and valleys above and below the mean reference line. Limits for journal surfaces are 0.3 µm (12 AA).

AXIAL PROFILE: The deviation of the journal surface from a reference line. Total peak to valley variation per full length of journal.

AXIAL PROFILE SLOPE: The amount of variation tolerable from the mean reference line of the journal in a particular distance (example: 0.0025 mm [0.0001 in.] deviation / 2.54 mm [0.100 in.] length maximum). This specification indicates that any deviation in excess of 0.0025 mm (0.0001 in.) inside a 2.54 mm (0.100 in.) length is not acceptable.

GOULD 1200: Surfanalyzer 1200 surface texture measuring system is used to determine surface parameters such as profile, roundness and waviness. A diamond stylus having a radius of 0.0025-0.013 mm (0.0001 -0.0005 in.) is moved at a constant speed over the surface. Vertical displacements of this stylus are converted into a voltage signal through a linear variable differential transformer.

OIL HOLE WASHOUT: The localized removal of material below the reference surface of an idealized round and straight journal at the trailing edge of the oil hole. This condition is the result of excessive polishing with a soft black apparatus (nut cracker, soft show, rawhide) with lapping paper or cloth in an attempt to improve the surface finish.

A depression (washout) extending beyond the oil hole blend out ellipse reduces the effective bearing area appreciably. This type of polishing is not recommended.

PIN and CRANKPIN: The cylindrical piece to which the connecting rod is attached.

RADIAL CHATTER: This term relates to surface irregularities which are of greater magnitude or spacing than those indicated by the term roughness. Chatter might be the result of vibration or deflection of a cutting tool, of some part of the machine, or the work itself.

 Copyright © 2004 DETROIT DIESEL CORPORATION

ENGINE PLUG AND DOWEL CHARTS

Following figures support the Series 60 Engine plugs and dowels.

1991 Model Year and Later

See Figure 1-535; see Figure 1-536; see Figure 1-537; see Figure 1-538; see Figure 1-539; and see Figure 1-540 for plug and dowel information supporting 1991 model year and later Series 60 Engines.

(Rev. 2004) *All information subject to change without notice.*
6SE483 0401 Copyright © 2004 DETROIT DIESEL CORPORATION

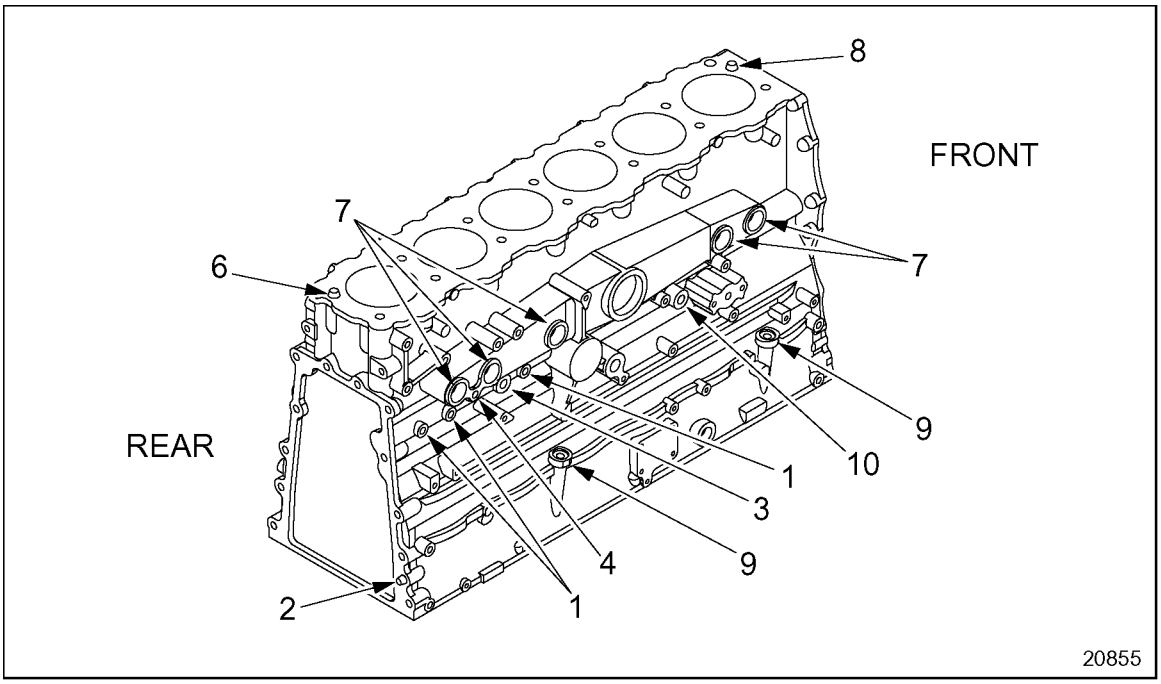

1. 8922327 1/4 in. Pipe Plug (4 places). Torque to 19-24 N·m (14 -18 lb·ft).
2. 8929015 Dowel (Round) * ‡
3. 8929594 3/8 in. Pipe Plug (2 places). Torque to 24-31 N·m (18-23 lb·ft).
4. 8924140 Draincock
5. 8929022 Dowel (Diamond) (2 places)* ‡ §
6. 8929163 Dowel (Diamond) * † §
7. 5139991 Cup Plug (5 places) ||
8. 8929152 Dowel (Round) * †
9. 8922327 1/4 in. Pipe Plug (1 place). Opposite Oil Level Dipstick Location.
10. 8929594 3/8 in. Pipe Plug (2 places). Torque to 24-31 N·m (18-23 lb·ft).

*Installed to a height of 12.0 mm ± 0.5 mm (0.472 in. ± 0.002 in.).

† Use tool J 36244-1to install.

‡ Use tool J 36224-2 to install.

§ Refer to illustration for orientation of dowels.

|| Cup plug 7 are installed 2.5-3.0 mm (0.098 in. -0.118 in.) below the machined surface. Use tool set J 35653 to install the cup plugs. Coat the outside sealing edge of the cup plugs with a good grade of non-hardening sealant such as Loctite® 620 (or equivalent) before installing.

Figure 1-535 Right Side View

 Copyright © 2004 DETROIT DIESEL CORPORATION

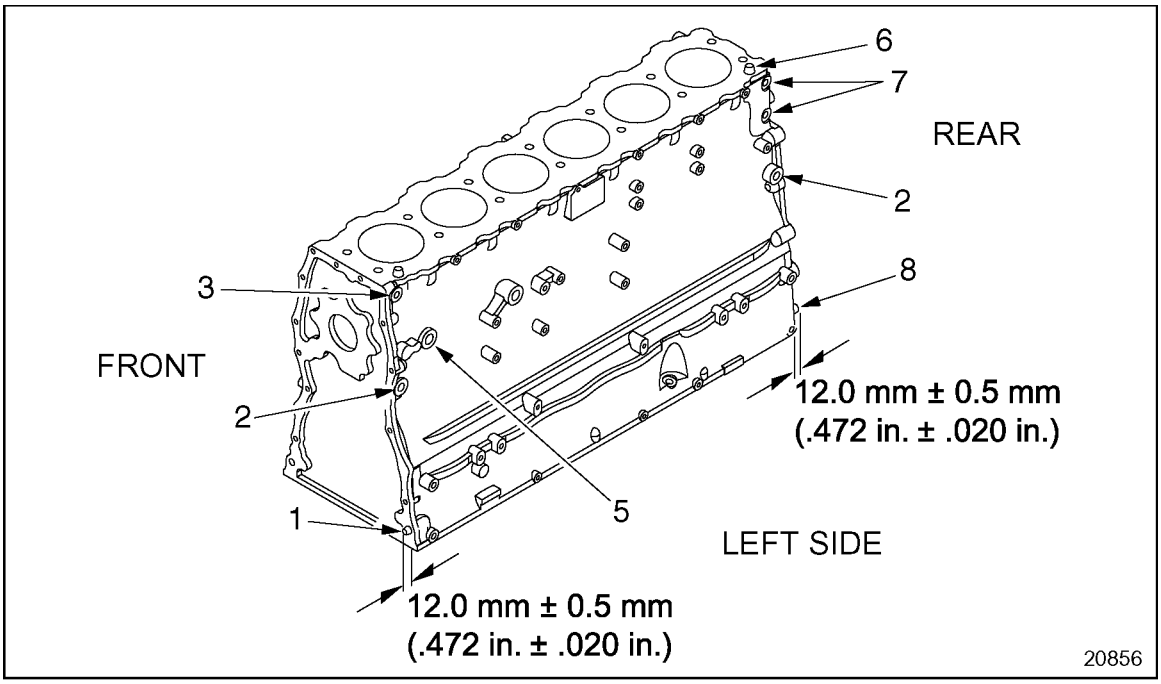

1. 8929022 Dowel (Diamond) (2 places)* ‡ §

2. 8924517 3/8 in. Pipe Plug (2 places). Torque to 24-31 N·m (18-23 lb·ft).

3. 8922327 1/4 in. Pipe Plug (4 places). Torque to 19-24 N·m (14 -18 lb·ft).

4. 8929152 Dowel (Round) * †

5. 8923916 1/2 in. Pipe Plug (1 place). Torque to 31-39 N·m (23-29 lb·ft).

6. 8929163 Dowel (Diamond) * † §

7. 8922327 1/4 in. Pipe Plug (2 places). Required only for pressure testing of cylinder block. In service, these plugs are replaced by the oil pressure sensor (OPS), refer to section 2.27.1, and the oil temperature sensor (OTS), refer to section 2.28.1.

8. 8929015 Dowel (Round) * ‡

*Installed to a height of 12.0 mm ± 0.5 mm (0.472 in. ± 0.002 in.).

† Use tool J 36244 to install.

‡ Use tool J 36244-2 to install.

§ Refer to illustration for orientation of dowels.

Figure 1-536 Left Side View

(Rev. 2004) *All information subject to change without notice.*
6SE483 0401 Copyright © 2004 DETROIT DIESEL CORPORATION

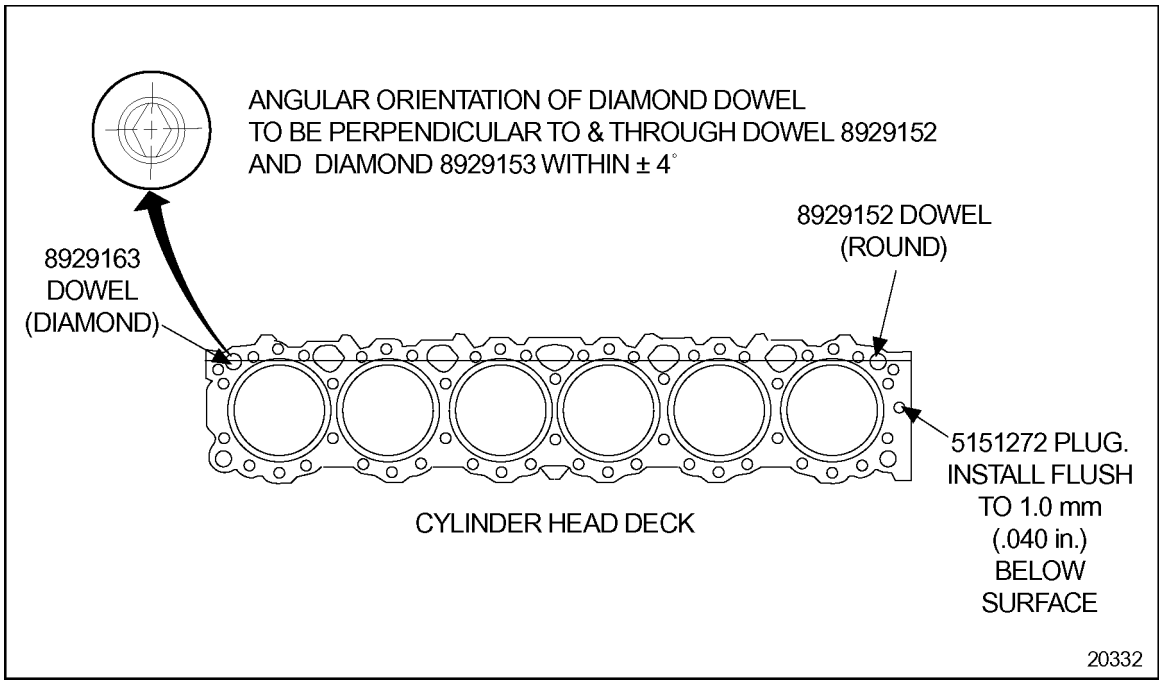

Figure 1-537 Cylinder Head Deck

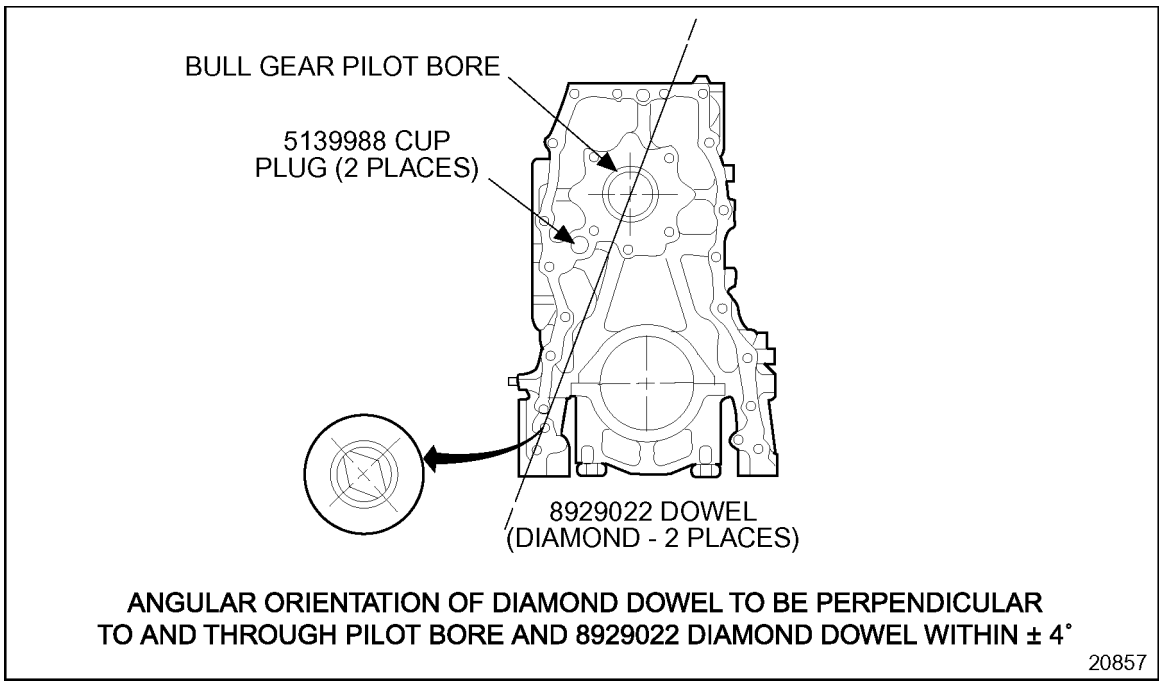

Figure 1-538 Front View

 Copyright © 2004 DETROIT DIESEL CORPORATION

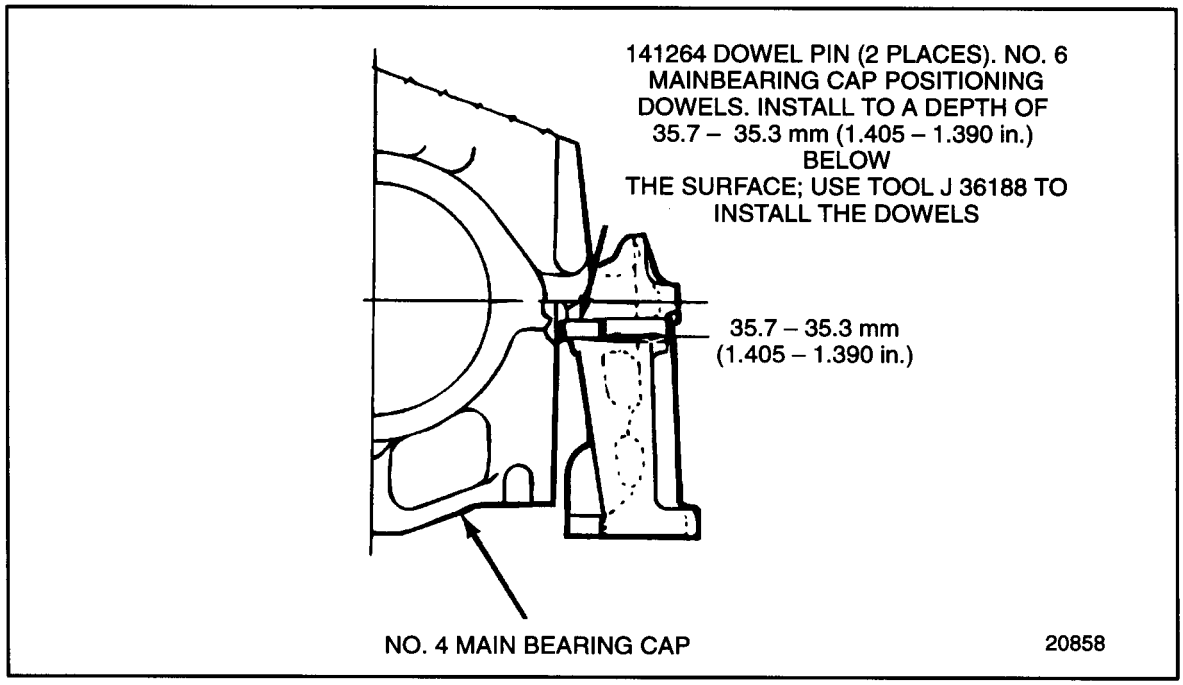

Figure 1-539 No. 6 Main Bearing Cap

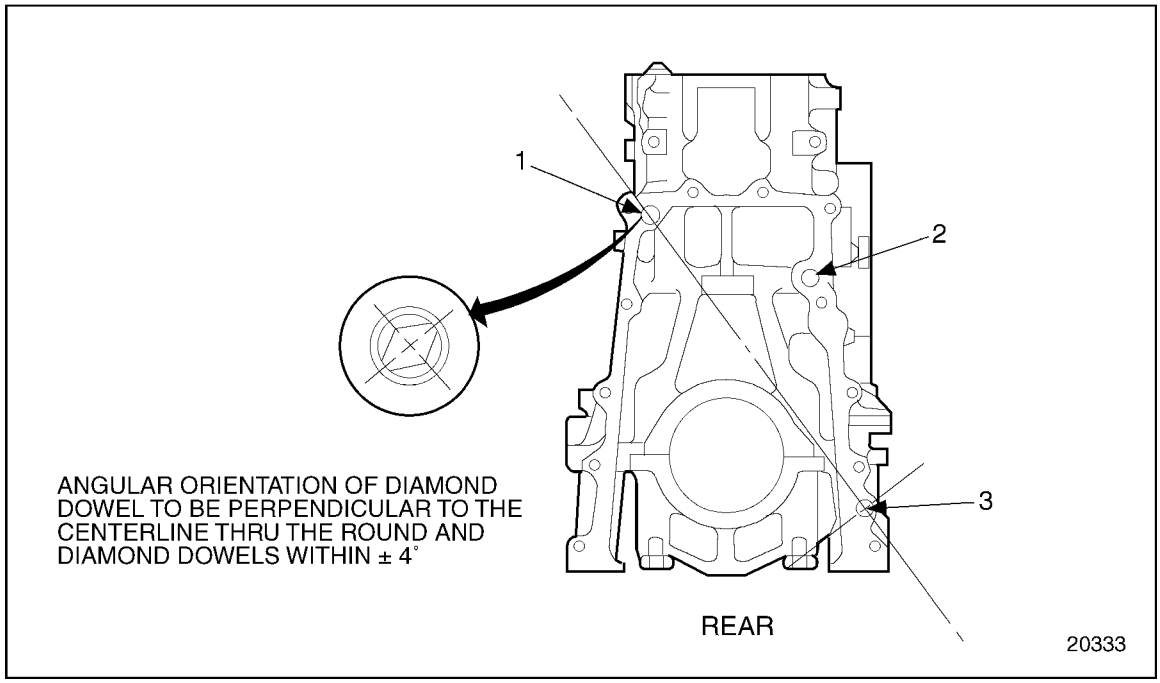

1.8929022 Dowel (Diamond-2 Places)

2.5139988 Cup Plug (2 Places)

3.8929015 Dowel (Round)

Figure 1-540 Rear View

(Rev. 2004) *All information subject to change without notice.*
6SE483 0401 Copyright © 2004 DETROIT DIESEL CORPORATION

Pre-1991 Engines

See Figure 1-541; see Figure 1-542; see Figure 1-543; see Figure 1-544; see Figure 1-545; see Figure 1-546; see Figure 1-547; see Figure 1-548; and see Figure 1-549for plug and dowel information supporting pre-1991 model year Series 60 Engines.

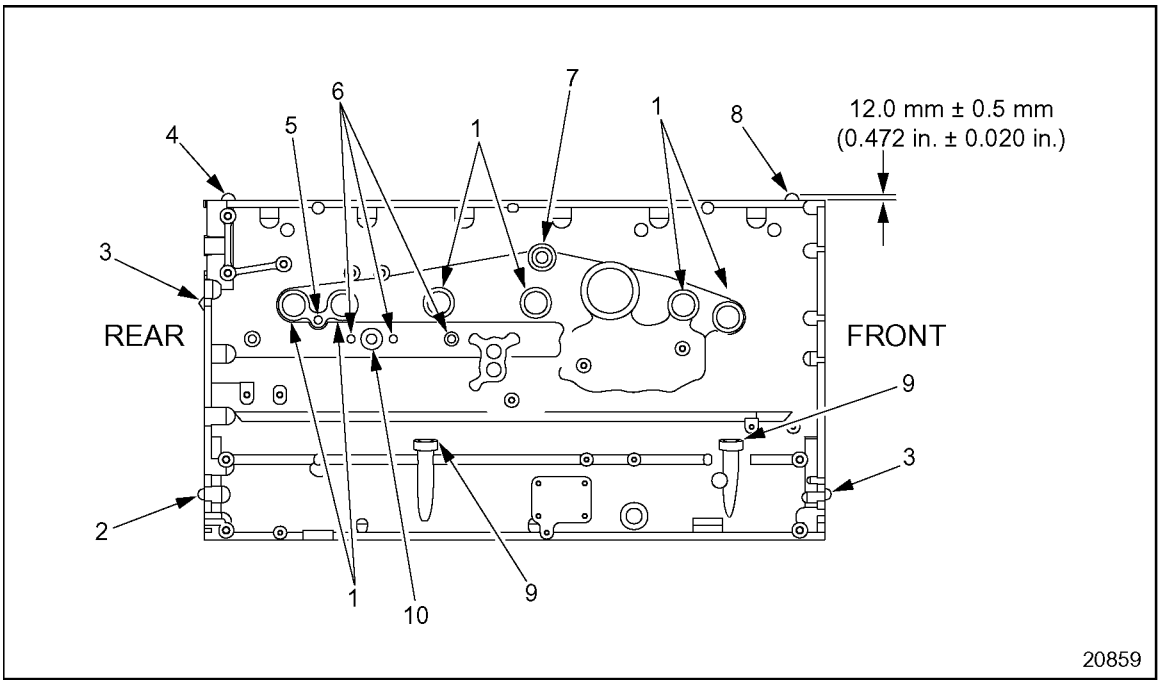

1. 5139991 Cup Plug (6 places) ||
2. 8929015 Dowel (Round) * ‡
3. 8929022 Dowel (Diamond) (2 places)* ‡ §
4. 8929153 Dowel (Diamond)
5. 8924140 Draincock
6. 8922327 1/4 in. Pipe Plug (4 places). Torque to 19-24 N·m (14-18 lb·ft).
7. 8923312 3/4 in. Pipe Plug (1 place). Torque to 45-56 N·m (31-39 lb·ft).
8. 8929152 Dowel (Round) * †
9. 8922327 1/4 in. Pipe Plug (4 places). Torque to 19-24 N·m (14-18 lb·ft).
10. 8929594 3/8 in. Pipe Plug (2 places). Torque to 24-31 N·m (18-23 lb·ft).

*Installed to a height of 12.0 mm ± 0.5 mm (0.472 in. ± 0.002 in.).

† Use tool J 36244-1to install.

‡ Use tool J 36244-2 to install.

§ Refer to illustration for orientation of dowels.

|| Cup plug 7 are installed 2.5-3.0 mm (0.098 -0.118 in.) below the machined surface. Use tool set J 35653 to install the cup plugs. Coat the outside sealing edge of the cup plugs with a good grade of non-hardening sealant such as Loctite® 620 (or equivalent) before installing.

Figure 1-541 Right Side View

 Copyright © 2004 DETROIT DIESEL CORPORATION

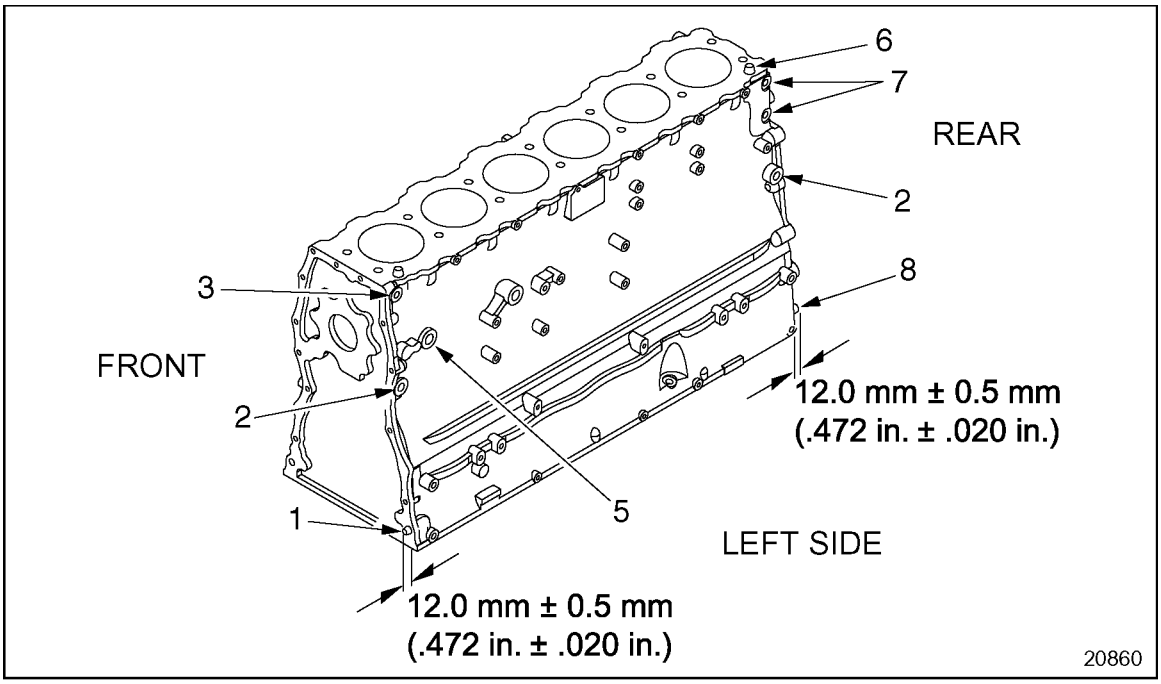

1. 8929022 Dowel (Diamond) (2 places)* ‡ §
2. 8929594 3/8 in. Pipe Plug (2 places) Torque to 24-31 N·m (18-23 lb·ft).
3. 8922327 1/4 in. Pipe Plug (4 places). Torque to 19-24 N·m (14-18 lb·ft).
4. 8929152 Dowel (Round) * †
5. 8923916 1/2 in. Pipe Plug (1 place). Torque to 31-39 N·m (23-29 lb·ft).
6. 8929153 Dowel (Diamond) * † §
7. 8922327 1/4 in. Pipe Plug (2 places). Required only for pressure testing of cylinder block. In service, these plugs are replaced by the oil pressure sensor (OPS).
8. 8929015 Dowel (Round) * ‡

*Installed to a height of 12.0 mm ± 0.5 mm (0.472 in. ± 0.002 in.)

† Use toolJ 36224-1 to install.

‡ Use tool J 36224-2 to install.

§ Refer to illustration for orientation of dowels.

Figure 1-542 Left Side View

(Rev. 2004) *All information subject to change without notice.*
6SE483 0401 Copyright © 2004 DETROIT DIESEL CORPORATION

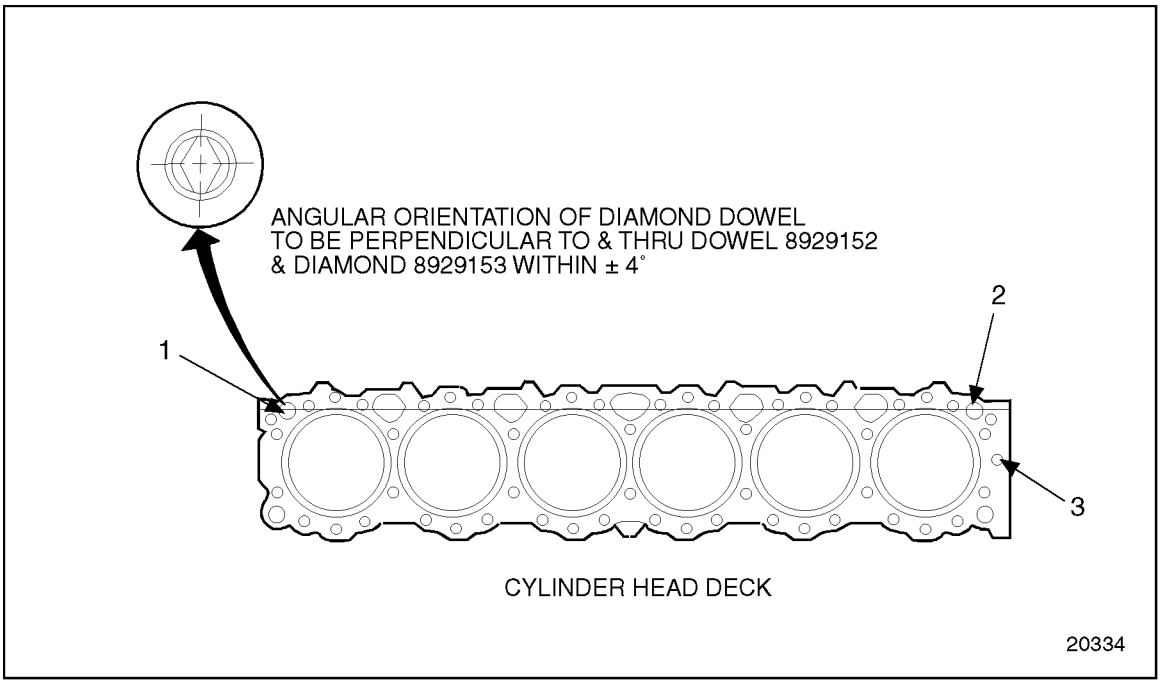

1. 8929163 Dowel (Diamond)
2. 8929152 Dowel
3. 5151272 Plug (1.0 mm [0.040 in.] below surface)

Figure 1-543 Cylinder Head Deck

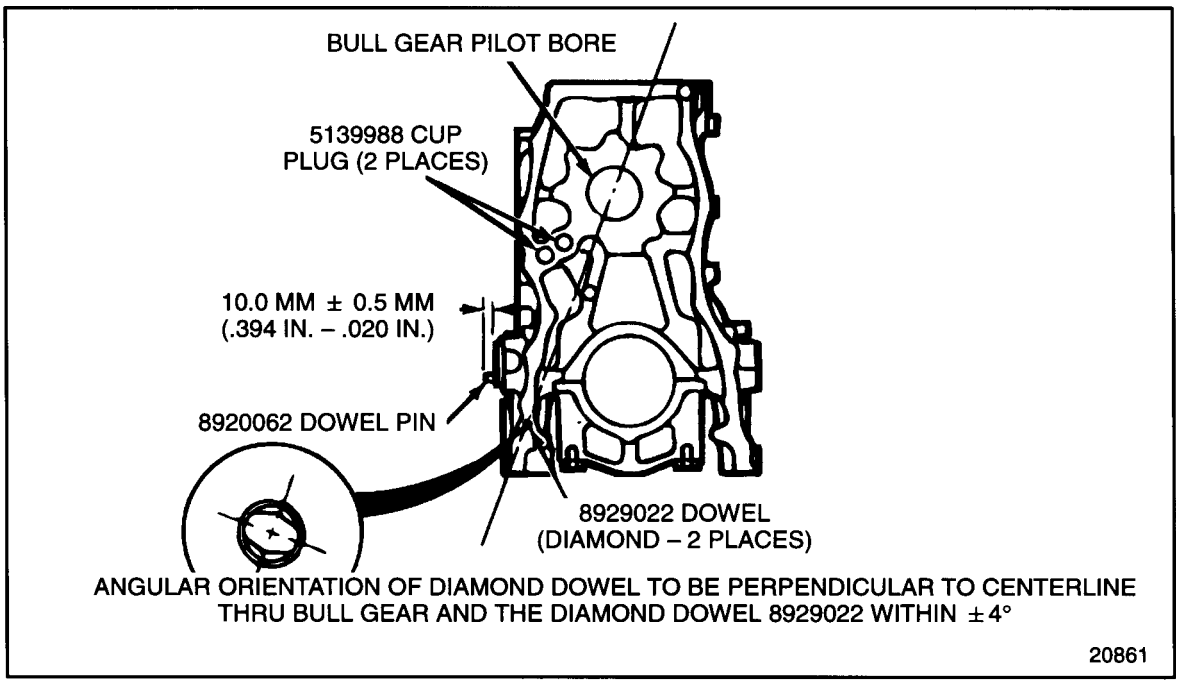

1. 8929022 Dowel (Diamond-2 Places)
2. 8920062 Dowel Pin
3. 5139988 Cup Plug (2 Places)
4. Bull Gear Pilot Bore

Figure 1-544 Front View

 Copyright © 2004 DETROIT DIESEL CORPORATION

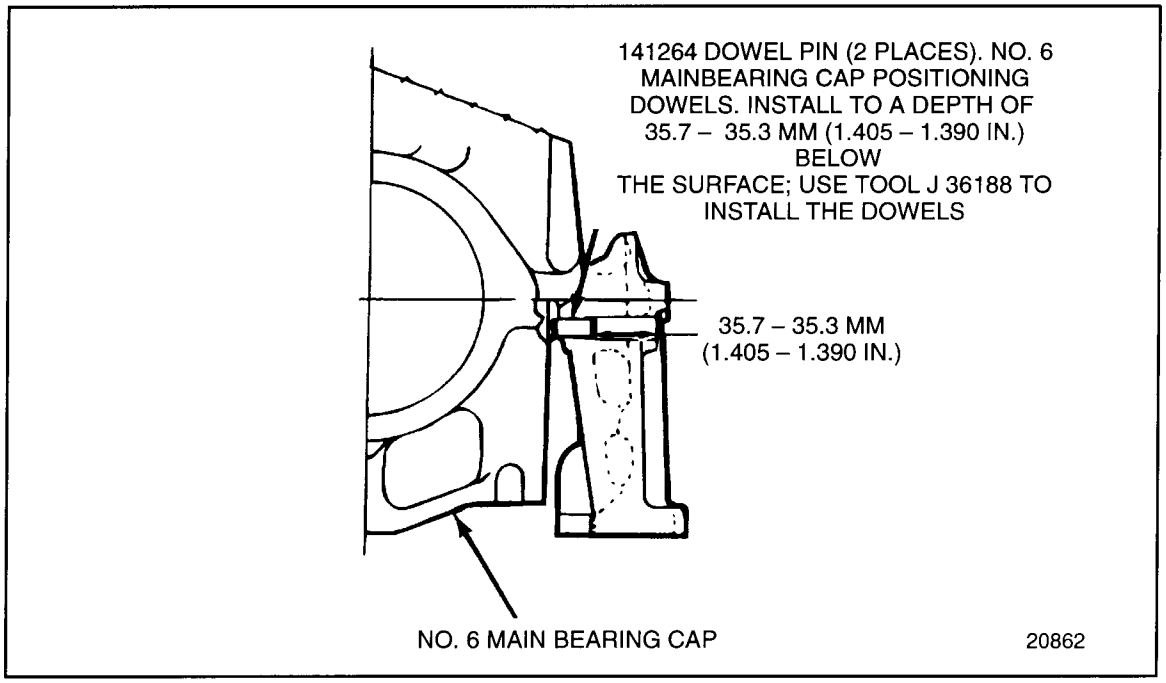

Figure 1-545 No. 6 Main Bearing Cap

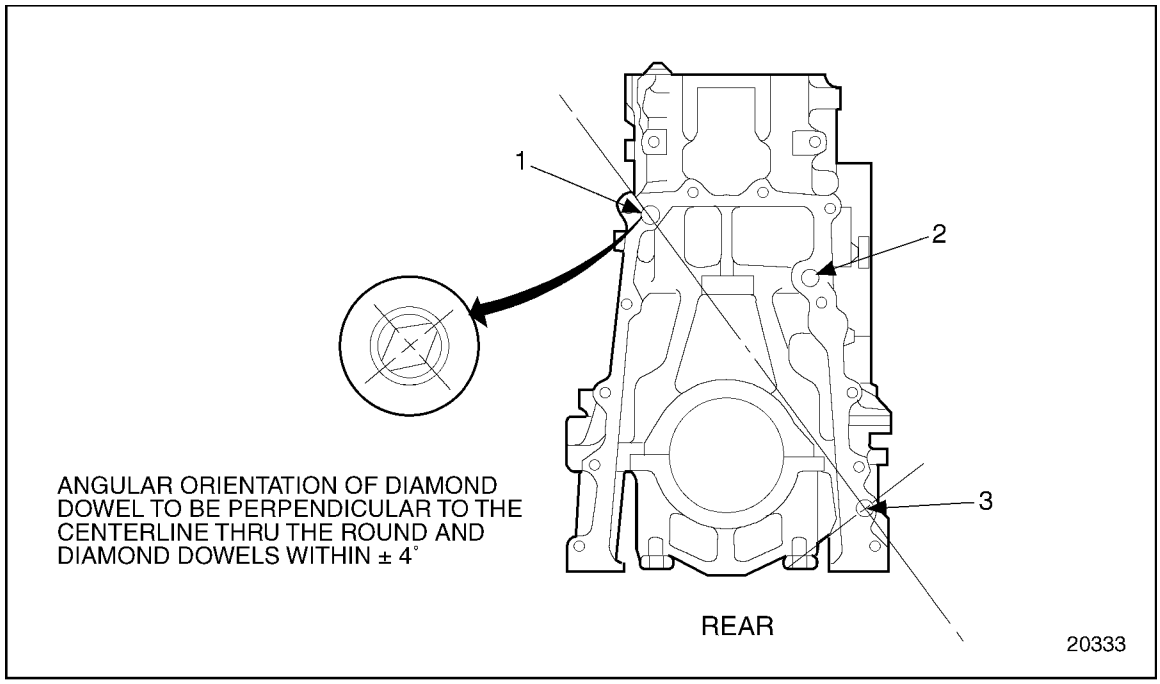

1. 8929022 Dowel (Diamond-2 Places)
2. 5139988 Cup Plug (2 Places)
3. 8929015 Dowel (Round)

Figure 1-546 Rear View

(Rev. 2004) *All information subject to change without notice.*
6SE483 0401 Copyright © 2004 DETROIT DIESEL CORPORATION

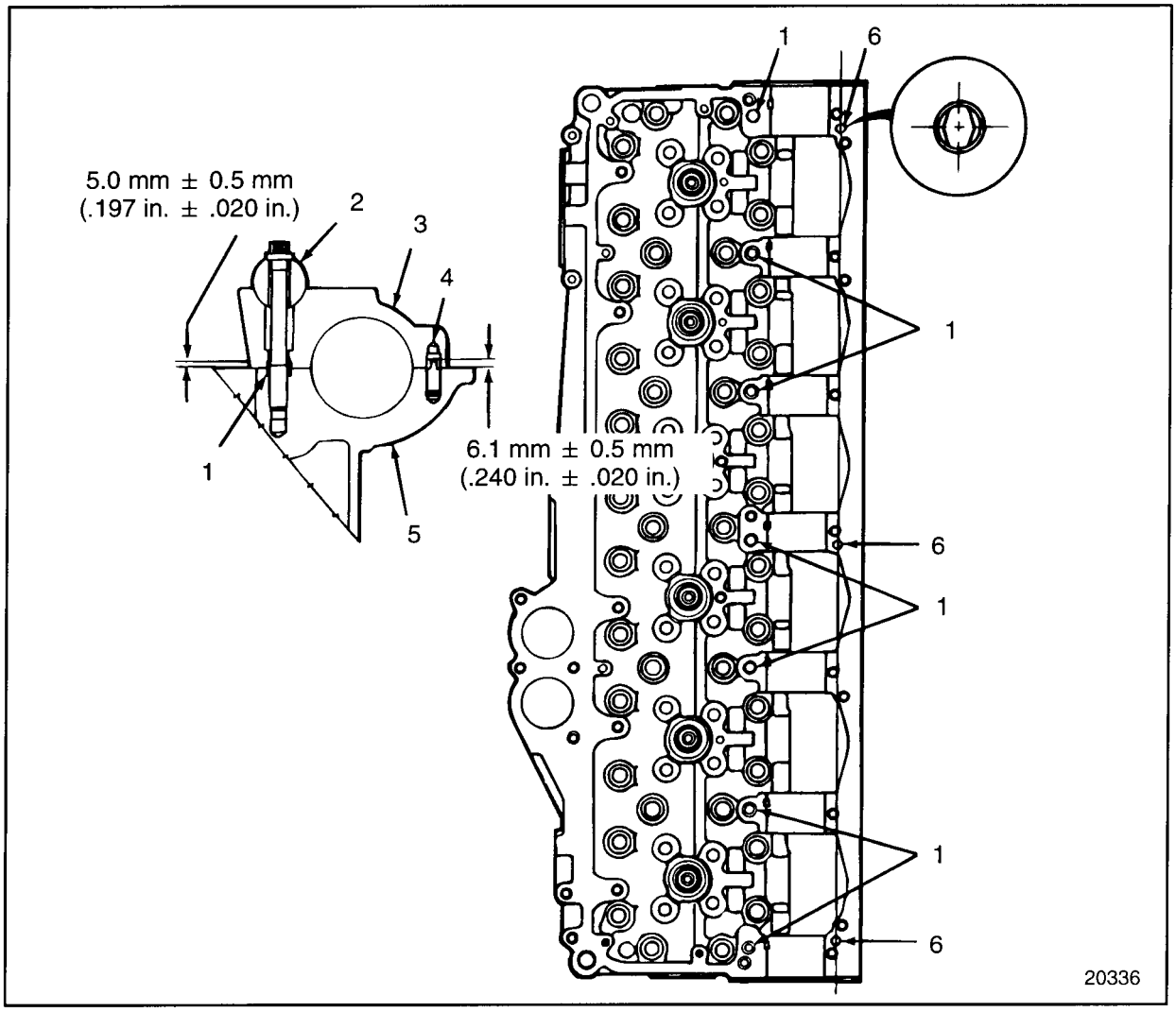

1. 5138638 Dowel (Hollow) (7 places). Install to a height of 5.000 mm ± 0.254 mm (0.197 in. ± 0.010 in.). Bearing Cap
2. Rocker Arm Shaft
3. Camshaft Cap
4. Cylinder Head Dowel
5. Cylinder Head
6. 5143033 Dowel (Diamond) (3 places). Install to a height of 6.1 mm ± 0.5 mm (0.240 in. ± 0.010 in.)

Figure 1-547 Cylinder Head Dowel Chart

 Copyright © 2004 DETROIT DIESEL CORPORATION

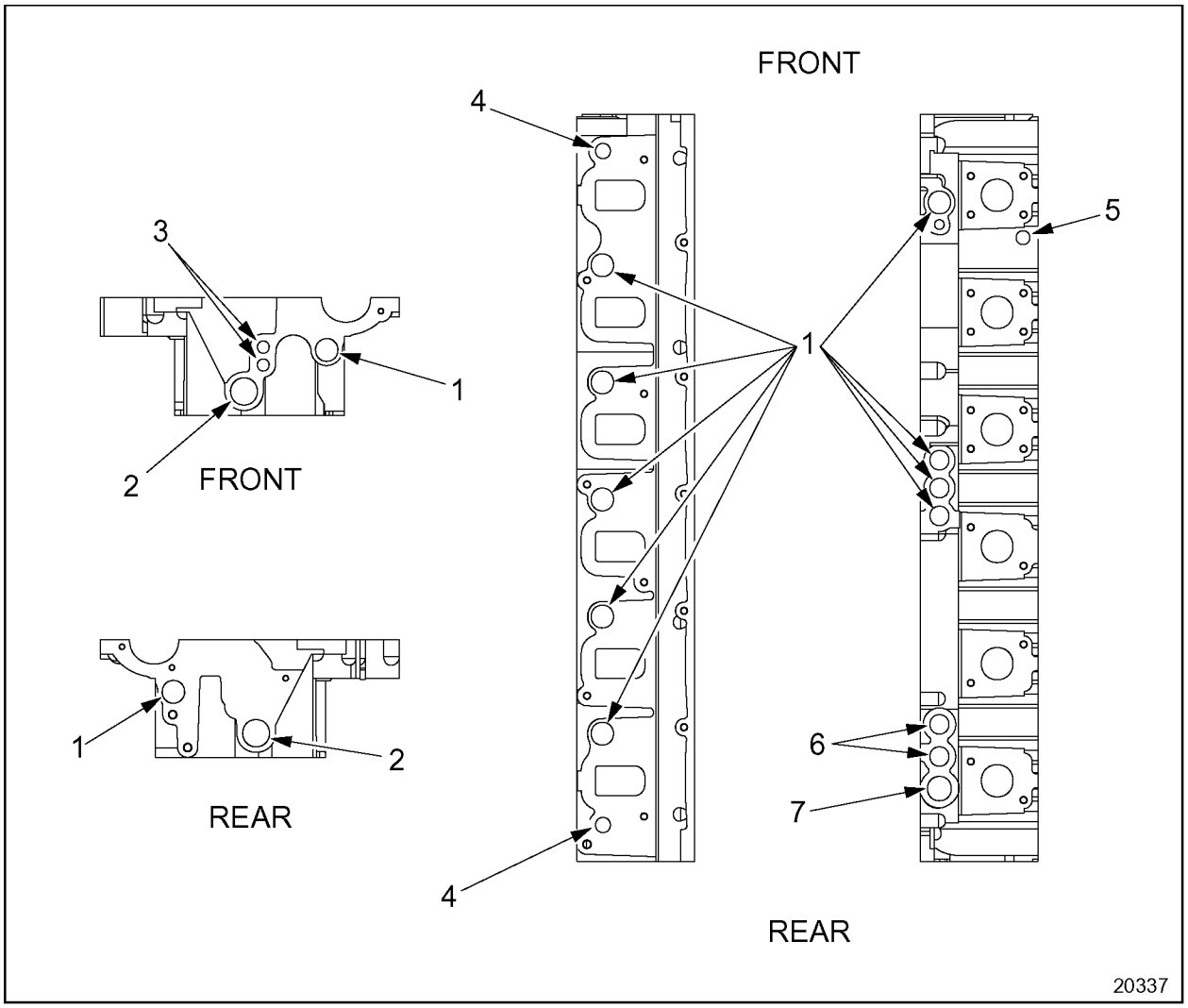

1. 5109157 Cup Plug (11 places) * †

2. 5139991 Cup Plug (2 places) * †

3. 23513197 3/8 in. Pipe Plug (Square Drive) (2 places). Torque to 30-33 N·m (22-24 lb·ft).

4. 8923916 1/2 in. Pipe Plug (2 places). Torque to 31-39 N·m (23-29 lb·ft).

5. 8926991 Fuse Plug. Torque to 19-24 N·m (14-18 lb·ft).

6. 8923313 3/4 in. Pipe Plug (2 places). Torque to 45-56 N·m (33-41 lb·ft).

7. 8924750 1 in. Pipe Plug (1 place). Torque to 102-127 N·m (75-94 lb·ft).

*Cup plugs 1 and 2 are installed 2.5-3.0 mm (0.098 in. -0.118 in.) below the machined surface.

† Use tool set J 35653 to install the cup plugs. Coat the outside sealing edge of the cup plugs with a good grade of non-hardening sealant such as Loctite® 620 (or equivalent) before installing.

Figure 1-548 Cylinder Head Cup, Pipe Plug, and Dowel Chart

(Rev. 2004) *All information subject to change without notice.*
6SE483 0401 Copyright © 2004 DETROIT DIESEL CORPORATION

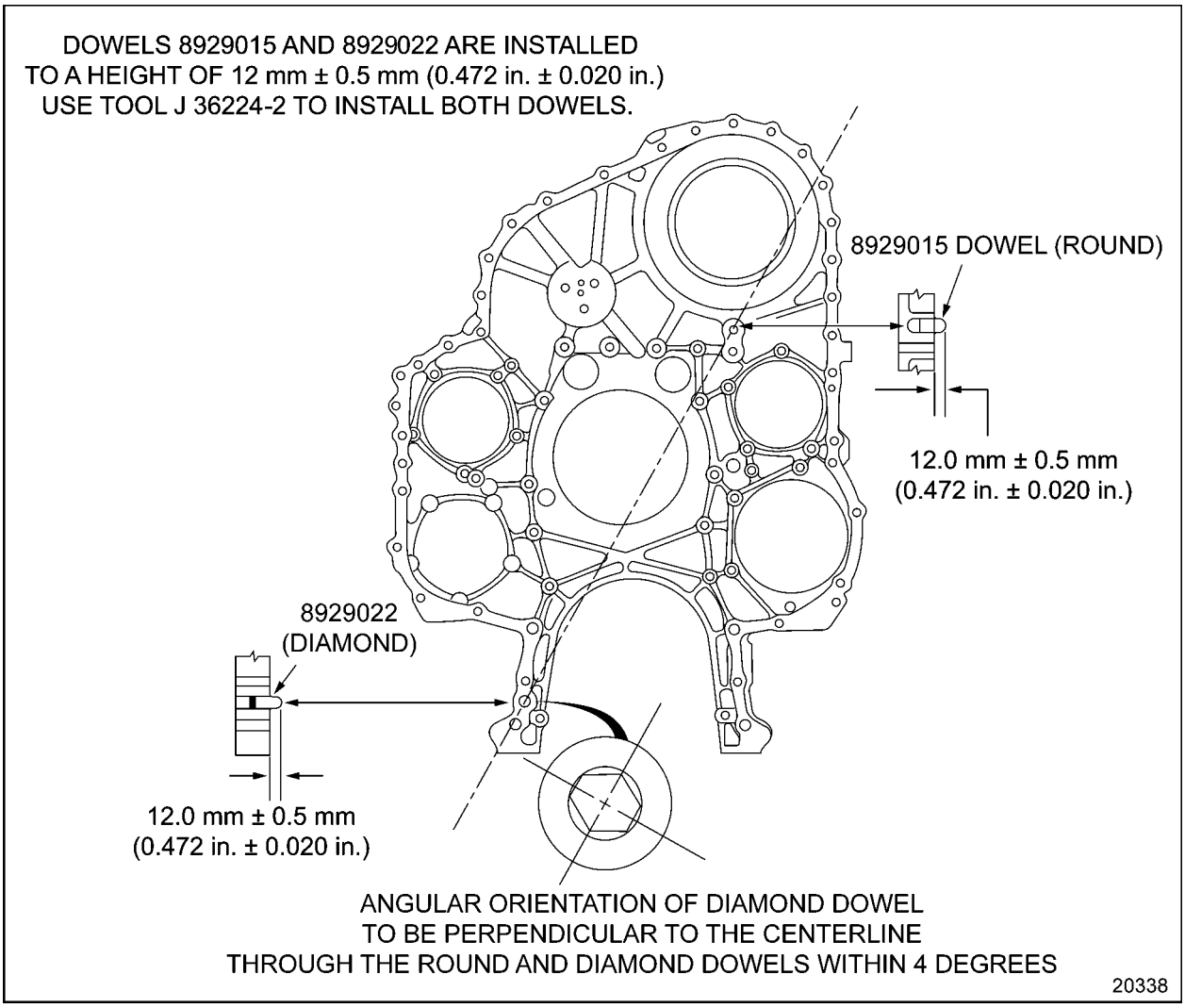

Figure 1-549 Gear Case Dowel Chart

 Copyright © 2004 DETROIT DIESEL CORPORATION

SPECIFICATIONS

Specifications, clearances and wear limits are listed below. It should be specifically noted that the clearances apply only when all new parts are used at the point where the various specifications apply. This also applies to references within the text of the manual. The column entitled "Limits" in this chart lists the amount of wear or increase of clearance which can be tolerated in used engine parts and still ensure satisfactory performance. It should be emphasized that the figures given as "Limits" must be qualified by the judgment of personnel responsible for installing new parts. These wear limits are, in general, listed only for the parts more frequently replaced in engine overhaul work. For additional information, refer to the text.

Table of Specifications, New Clearances, and Wear Limits

These limits also apply to oversize and undersize parts.

Refer to the following tables to obtain specifications, new clearances, and wear limits for the Series 60 Engine:

1. Cylinder block is listed in Table 1-17.
2. Cylinder liner is listed in Table 1-18.
3. Cross-head piston and piston rings are listed in Table 1-19.
4. Articulated 14L piston and piston rings are listed in Table 1-20.
5. Cross-head cast-iron piston pin is listed in Table 1-21.
6. Articulated 14L piston pin is listed in Table 1-22.
7. Crankshaft is listed in Table 1-23.
8. Connecting rod bearing is listed in Table 1-24.
9. Closed—end connecting rod bushing is listed in Table 1-25.
10. Main bearing is listed in Table 1-26.
11. Camshaft is listed in Table 1-27.
12. Camshaft bearing is listed in Table 1-28.
13. Camshaft drive gear is listed in Table 1-29.
14. Idler gear is listed in Table 1-30.
15. Crankshaft timing gear is listed in Table 1-31.
16. Bull gear is listed in Table 1-32.
17. Cylinder head is listed in Table 1-33.
18. Intake valve (diesel) seat insert is listed in Table 1-34.
19. Intake valve (natural gas) seat insert is listed in Table 1-35.
20. Exhaust valve (diesel) seat insert is listed in Table 1-36.
21. Exhaust valve (natural gas) seat insert is listed in Table 1-37.

(Rev. 2004) *All information subject to change without notice.*
6SE483 0401 Copyright © 2004 DETROIT DIESEL CORPORATION

22. Intake valves (diesel) are listed in Table 1-38.
23. Intake valves (natural gas) are listed in Table 1-39.
24. Exhaust valves (diesel) are listed in Table 1-40.
25. Exhaust valves (natural gas) are listed in Table 1-41.
26. Valve guides (diesel) are listed in Table 1-42.
27. Valve guides (natural gas) are listed in Table 1-43.
28. Rocker arms and shaft (diesel) are listed in Table 1-44.
29. Rocker arms and shaft (natural gas) are listed in Table 1-45.
30. Cam follower roller is listed in Table 1-46.

 Copyright © 2004 DETROIT DIESEL CORPORATION

Engine Part (Standard Size, New)	Minimum	Maximum	Limits
Block Bore: Diameter - 15.0 mm (0.60 in.) from top of block	149.050 mm (5.868 in.)	149.120 mm (5.871 in.)	-
Diameter - 235.0 mm (9.25 in.) from top of block	146.050 mm (5.750 in.)	146.125 mm (5.753 in.)	0.076 mm (0.003 in.)
Diameter - 270.0 mm (10.63 in.) from top of block	146.050 mm (5.750 in.)	146.125 mm (5.753 in.)	0.076 mm (0.003 in.)
Out-of-round	-	-	0.0254 mm (0.001 in.)
Taper (lower bore)	-	-	0.0254 mm (0.001 in.)
Cylinder Liner Counter Bore:	-	-	-
Diameter	157.15 mm (6.186 in.)	157.25 mm (6.191 in.)	-
* Depth	8.9256 mm (0.3514 in.)	8.9746 mm (0.3533 in.)	-
Main Bearing Bore:	-	-	-
Inside diameter (vertical axis)	133.00 mm (5.236 in.)	133.020 mm (5.237 in.)	-
Top Surface of Block:	-	-	-
Center of main bearing bore to top of block	436.50 mm (17.1850 in.)	436.62 mm (17.1897 in.)	-
Flatness (transverse)	-	-	0.076 mm (0.003 in.)
Flatness (longitudinal)	-	-	0.127 mm (0.005 in.)

* The bottom of the counterbore must not vary in depth more than 0.04 mm (0.0015 in.). No two adjacent counterbores can vary in depth more than 0.025 mm (0.001 in.) when gaged longitudinally.

Table 1-17 Cylinder Block

(Rev. 2004) *All information subject to change without notice.*
6SE483 0401 Copyright © 2004 DETROIT DIESEL CORPORATION

Engine Part (Standard Size, New)	Minimum	Maximum	Limits
Outside Diameter (below flange)	148.95 mm (5.864 in.)	149.00 mm (5.866 in.)	-
Outside Diameter (below crevice seal groove)	145.975 mm (5.747 in.)	146.025 mm (5.749 in.)	-
Outside Diameter (between "D" ring grooves)	145.975 mm (5.747 in.)	146.025 mm (5.749 in.)	-
Flange Thickness	8.960 mm (0.3527 in.)	9.00 mm (0.3543 in.)	-
Inside Diameter	130.00 mm (5.118 in.)	130.05 mm (5.120 in.)	-
14 L - Inside Diameter	133.00 mm (5.240 in.)	133.05 mm (5.242 in.)	-
Out-of-Round (inside diameter)	-	-	0.025 mm (0.001 in.)
Taper	-	-	
Height of Flange Above Block	-0.0127 mm (-0.0005 in.)	0.0762 mm (0.003 in.)	-
Variation in Height between Adjacent Liners	-	-	0.05 mm (0.002 in.)

Table 1-18 Cylinder Liner

 Copyright © 2004 DETROIT DIESEL CORPORATION

Engine Part (Standard Size, New)	Minimum	Maximum	Limits
At top (above firing ring)	128.63 mm (5.064 in.)	128.83 mm (5.072 in.)	-
Below (2nd) compression ring	129.776 mm (5.1093 in.)	129.845 mm (5.112 in.)	-
Compression Rings	-	-	-
Gap (2.5 mm [.0985 in.] chrome fire ring)	0.40 mm (0.016 in.)	0.87 mm (0.034 in.)	-
Gap (3.5 mm plasma [.1379 in.] fire ring) (High sulfur fuel export engines)	0.51 mm (0.020 in.)	0.87 mm (0.034 in.)	-
Gap (No. 2 compression ring)	0.79 mm (0.031 in.)	1.30 mm (0.051 in.)	-
Clearance ring-to-groove:	-	-	-
Top (keystone fire ring)	must be checked with Piston Ring Land gage J 35884-A	-	-
No. 2 (keystone compression ring)	must be checked with Piston Ring Land Gage J 38689	-	-
Oil Control Rings	-	-	-
Gap	0.40 mm (0.016 in.)	0.81 mm (0.032 in.)	-
Clearance	0.03 mm (0.001 in.)	0.11 mm (0.004 in.)	-
* Piston Pin Bore in Dome (3-piece bushing)	51.000 mm (2.0078 in.)	51.025 mm (2.0088 in.)	-
Piston Skirt to Liner Clearance (thrust faces)	0.050 mm (0.0020 in.)	0.183 mm (0.0072 in.)	-

* Both ends must be measured on vertical and horizontal planes.

Table 1-19 Cross-head Piston and Piston Rings

(Rev. 2004) *All information subject to change without notice.*
6SE483 0401 Copyright © 2004 DETROIT DIESEL CORPORATION

Engine Part (Standard Size, New)	Minimum	Maximum	Limits
At top (above firing ring)	131.60 mm (5.185 in.)	131.70 mm (5.189 in.)	-
Below (2nd) compression ring	132.685 mm (5.2278 in.)	132.715 mm (5.2290 in.)	-
Compression Rings	-	-	-
Gap (3.0 mm chrome fire ring)	0.60 mm (0.0236 in.)	0.80 mm (0.0315 in.)	-
Gap (No. 2 compression ring)	0.63 mm (0.0248 in.)	.98 mm (0.0386 in.)	-
Clearance ring-to-groove:	-	-	-
Top (keystone fire ring)	must be checked with Piston Ring Land J 35884-A	-	-
No. 2 (keystone compression ring)	must be checked with Piston Ring Land J 38689	-	-
Oil Control Rings	-	-	-
Gap	0.21 mm (0.0083 in.)	0.51 mm (0.0201 in.)	-
Clearance	0.03 mm (0.001 in.)	0.11 mm (0.004 in.)	-
* Piston Pin Bore in Dome	55.05 mm (2.1990 in.)	55.065 mm (21696 in.)	-
Piston Skirt to Liner Clearance (thrust faces)	0.050 mm (0.0020 in.)	0.183 mm (0.0072 in.)	-

* Both ends must be measured on vertical and horizontal planes.

Table 1-20 Articulated 14L Piston and Piston Rings

Engine Part (Standard Size, New)	Minimum	Maximum	Limits
Cast Iron Piston Pin Diameter	44.99 mm (1.7712 in.)	45.00 mm (1.7716 in.)	44.96 mm (1.770 in.)

Table 1-21 Cross-head Cast Iron Piston Pin

Engine Part (Standard Size, New)	Minimum	Maximum	Limits
Steel Piston Pin Diameter	54.992 mm (2.1667 in.)	55.000 mm (2.1670 in.)	54.96 mm (2.164 in.)

Table 1-22 Articulated Steel Piston Pin

 Copyright © 2004 DETROIT DIESEL CORPORATION

Engine Part (Standard Size, New)	Minimum	Maximum	Limits
Journal Diameter (main bearing)	124.968 mm (4.920 in.)	125.000 mm (4.921 in.)	-
Journal Diameter (connecting rod bearing)	84.963 mm (3.345 in.)	85.000 mm (3.346 in.)	-
14L - Journal Diameter (connecting rod bearing)	94.975 mm (3.739 in.)	95.000 mm (3.740 in.)	-
Journal Out-of-Round (ROD)	-	-	0.008 mm (0.0003 in.)
Journal Out-of-Round (MAIN)	-	-	0.0127 mm (0.0005 in.)
Journal Taper: Main Bearing	-	-	0.0127 mm (0.0005 in.)
Connecting Rod (full length)	-	-	0.008 mm (0.0003 in.)
Connecting Rod (half length)	-	-	0.004 mm (0.00016 in.)
* Run-out on Journals-Total Indicator Reading (mounted on No. 1 and 7 Journals): At Journals No. 2 and 6	-	-	0.075 mm (0.003 in.)
At Journals No. 3 and 5	-	-	0.127 mm (0.005 in.)
At Journal No. 4	-	-	0.152 mm (0.006 in.)
No. 6 Main Bearing Journal Thrust Width	49.45 mm (1.947 in.)	49.53 mm (1.950 in.)	-
Thrust Washer Thickness	3.48 mm (0.137 in.)	3.56 mm (0.140 in.)	-
End Play (end thrust clearance)		0.419 mm (0.0165 in.)	-

* Run-out tolerance given for guidance when regrinding crankshaft. When the run-out on adjacent journals is in the opposite direction, the sum must not exceed 0.076 mm (0.003 in.) total indicator reading. When the run-out on adjacent journals is in the same direction, the difference must not exceed 0.076 (0.003 in.) total indicator reading.

Table 1-23 Crankshaft

(Rev. 2004) *All information subject to change without notice.*
6SE483 0401 Copyright © 2004 DETROIT DIESEL CORPORATION

Engine Part (Standard Size, New)	Minimum	Maximum	Limits
Bearing-to-Journal Clearance	0.040 mm (0.0016 in.)	0.127 mm (0.005 in.)	0.152 mm (0.006 in.)
Bearing Thickness 90 degrees from Parting Line	3.108 mm (0.1224 in.)	3.125 mm (0.1230 in.)	3.086 mm (0.1215 in.)
14L Bearing Thickness 90 degrees from Parting Line	3.111 mm (0.1225 in.)	3.124 mm (0.1230 in.)	-

Table 1-24 Connecting Rod Bearing

Engine Part (Standard Size, New)	Minimum	Maximum	Limits
Diameter	55.055 mm (2.16752 in.)	55.070 mm (2.16811 in.)	55.100 mm (2.16929 in.)

Table 1-25 Closed-End Connecting Rod Bushing

Engine Part (Standard Size, New)	Minimum	Maximum	Limits
Bearing-to-Journal Clearance	0.040 mm (0.0016 in.)	0.127 mm (0.005 in.)	0.151 mm (0.006 in.)
Bearing Thickness 90 degrees from Parting Line	3.960 mm (0.1559 in.)	3.977 mm (0.1566 in.)	3.937 mm (0.1550 in.)

Table 1-26 Main Bearing

Engine Part (Standard Size, New)	Minimum	Maximum	Limits
Diameter (bearing journals)	64.974 mm (2.558 in.)	65.000 mm (2.5559 in.)	-
Run-out at Center Bearing (when mounted on end bearings should not exceed)	-	-	0.050 mm (0.002 in.)
End Thrust	0.076 mm (0.003 in.)	0.381 mm (0.015 in.)	-

Table 1-27 Camshaft

 Copyright © 2004 DETROIT DIESEL CORPORATION

Engine Part (Standard Size, New)	Minimum	Maximum	Limits
Bearing-to-Journal Clearance	0.089 mm (0.0035 in.)	0.166 mm (0.0065 in.)	0.191 mm (0.0075 in.)
Bearing Thickness (90 degrees from Parting Line)	1.941 mm (0.0764 in.)	1.954 mm (0.0769 in.)	-

Table 1-28 Camshaft Bearing

Engine Part (Standard Size, New)	Minimum	Maximum	Limits
Camshaft Drive Gear Bore	52.00 mm (2.0472 in.)	52.03 mm (2.0484 in.)	-
Outside Diameter:	-	-	-
Camshaft Hub	52.10 mm (2.0511 in.)	52.13 mm (2.0523 in.)	-
* Interference (gear-to-hub)	0.07 mm (0.0027 in.)	0.13 mm (0.0051 in.)	-
Backlash -(cam gear-to-adjustable idler)	0.051 mm (0.002 in.)	0.229 mm (0.009 in.)	0.305 mm (0.012 in.)

Table 1-29 Camshaft Drive Gear

Engine Part (Standard Size, New)	Minimum	Maximum	Limits
Backlash (adjacent idler-to-cam idler)	0.051 mm (0.002 in.)	0.229 mm (0.009 in.)	0.305 mm (0.012 in.)

* A minimum force of 20.0 kN (4500 lb.) must be obtained when pressing the camshaft drive gear to the drive gear hub.

Table 1-30 Idler Gear

Engine Part (Standard Size, New)	Minimum	Maximum	Limits
11.1 Liter Engine	132.860 mm (5.2307 in.)	132.900 mm (5.2322 in.)	-
12.7 Liter Engine	133.561 mm (5.2583 in.)	133.600 mm (5.2598 in.)	-
* Interference (gear-to-crankshaft)	0.076 mm (0.003 in.)	0.102 mm (press) (0.004 in.) (press)	-
Backlash:	-	-	-
Crank Gear-to-Bull Gear	0.051 mm (0.002 in.)	0.229 mm (0.009 in.)	0.305 mm (0.012 in.)
Crankshaft Gear-to-Oil Pump Drive Gear	0.051 mm (0.002 in.)	0.229 mm (0.009 in.)	0.305 mm (0.012 in.)

*A minimum force of 30 kN (6750 lb) must be obtained when pressing the crankshaft timing gear on the crankshaft.

Table 1-31 Crankshaft Timing Gear

(Rev. 2004) *All information subject to change without notice.*
6SE483 0401 Copyright © 2004 DETROIT DIESEL CORPORATION

Engine Part (Standard Size, New)	Minimum	Maximum	Limits
Backlash (Bull Gear-to-Water Pump, Accessory, Fuel Pump or Air Compressor Drive Gears)	0.051 mm (0.002 in.)	0.229 mm (0.009 in.)	0.305 mm (0.012 in.)

Table 1-32 Bull Gear

Engine Part (Standard Size, New)	Minimum	Maximum	Limits
Flatness (transverse)	-	-	0.076 mm (0.003 in.)
Flatness (longitudinal)	-	-	0.279 mm (0.011 in.)
Distance between Rail and Fire Deck (new)	164.85 mm (6.490 in.)	165.13 mm (6.501 in.)	-
Valve Insert Counterbore:	-	-	-
Intake Valve:	-	-	-
Diameter	46.12 mm (1.8157 in.)	46.15 mm (1.8169 in.)	-
Depth	11.46 mm (0.4511 in.)	11.76 mm (0.4629 in.)	-
Valve Insert Counterbore:	-	-	-
Exhaust Valve:	-	-	-
Diameter	41.26 mm (1.6244 in.)	41.29 mm (1.6255 in.)	-
Depth	10.70 mm (0.4212 in.)	11.00 mm (0.4330 in.)	-

Table 1-33 Cylinder Head

Engine Part (Standard Size, New)	Minimum	Maximum	Limits
Outside Diameter	46.20 mm (1.8188 in.)	46.22 mm (1.8196 in.)	-
Seat Width	0.48 mm (0.019 in.)	2.14 mm (0.084 in.)	-
Valve Seat Run-out	-	-	0.05 mm (0.002 in.)
Standard Seat Thickness	5.55 mm (0.282 in.)	7.256 mm (0.2857 in.)	-

Table 1-34 Intake Valve Seat Inserts (Diesel)

 Copyright © 2004 DETROIT DIESEL CORPORATION

Engine Part (Standard Size, New)	Minimum	Maximum	Limits
Outside Diameter	46.20 mm (1.8188 in.)	46.23 mm (1.820 in.)	-
Seat Width	0.83 mm (0.033 in.)	4.24 mm (0.167 in.)	-
Valve Seat Run-out	-	-	0.05 mm (0.002 in.)
Standard Seat Thickness	6.756 mm (0.266 in.)	6.858 mm (0.133 in.)	-

Table 1-35 Intake Valve Seat Inserts (Natural Gas)

Engine Part (Standard Size, New)	Minimum	Maximum	Limits
Outside Diameter	41.34 mm (1.627 in.)	41.36 mm (1.628 in.)	-
Seat Width	0.67 mm (0.026 in.)	2.66 mm (0.105 in.)	-
Valve Seat Run-out	-	-	0.05 mm (0.002 in.)
Standard Valve Seat Thickness	6.261 mm (0.2465 in.)	6.362 mm (0.2505 in.)	-

Table 1-36 Exhaust Valve Seat Inserts (Diesel)

Engine Part (Standard Size, New)	Minimum	Maximum	Limits
Outside Diameter	41.34 mm (1.627 in.)	41.36 mm (1.628 in.)	-
Seat Width	0.92 mm (0.036 in.)	3.37 mm (0.133 in.)	-
Valve Seat Run-out	-	-	0.05 mm (0.002 in.)
Standard Valve Seat Thickness	5.958 mm (0.234 in.)	6.060 mm (0.238 in.)	-

Table 1-37 Exhaust Valve Seat Inserts (Natural Gas)

Engine Part (Standard Size, New)	Minimum	Maximum	Limits
Stem Diameter	8.679 mm (0.3417 in.)	8.699 mm (0.3425 in.)	-
Valve Head-to-Cylinder Head 30 degrees (recess)	1.4 mm (0.055 in.)	1.8 mm (0.071 in.)	-

Table 1-38 Intake Valves (Diesel)

(Rev. 2004) *All information subject to change without notice.*
6SE483 0401 Copyright © 2004 DETROIT DIESEL CORPORATION

Engine Part (Standard Size, New)	Minimum	Maximum	Limits
Stem Diameter	8.725 mm (0.3435 in.)	8.745 mm (0.3443 in.)	-
Valve Head-to-Cylinder Head 30 degrees (recess)	0.80 mm (0.031 in.)	1.47 mm (0.058 in.)	-

Table 1-39 Intake Valves (Natural Gas)

Engine Part (Standard Size, New)	Minimum	Maximum	Limits
Stem Diameter	P/N 23506350 8.679 mm (0.3417 in.) P/N 23524521 8.701 mm (0.3426 in.)	P/N 23506350 8.699 mm (0.3425 in.) P/N 23524521 8.721 mm (0.3433 in.)	-
Valve Head-to-Cylinder Head 30 degrees (recess)	1.4 mm (0.055 in.)	1.8 mm (0.071 in.)	-

Table 1-40 Exhaust Valves (Diesel)

Engine Part (Standard Size, New)	Minimum	Maximum	Limits
Stem Diameter	8.712 mm (0.3430 in.)	8.732 mm (0.3438 in.)	-
Valve Head-to-Cylinder Head 20 degrees (recess)	0.82 mm (0.032 in.)	1.34 mm (0.053 in.)	-

Table 1-41 Exhaust Valves (Natural Gas)

Engine Part (Standard Size, New)	Minimum	Maximum	Limits
Height Above Cylinder Head	37.5 mm (1.476 in.)	38.0 mm (1.496 in.)	-
Diameter (inside)	8.763 mm (0.345 in.)	8.785 mm (0.346 in.)	-
Clearance (valve-to-guide, maximum)	-	-	Intake Valve P/N 8929590 0.152 mm (0.006 in.) Exhaust Valve P/N 23506350 0.152 mm (0.006 in.) Exhaust Valve P/N 23524521 0.101 mm (0.004 in.)

Table 1-42 Valve Guides (Diesel)

 Copyright © 2004 DETROIT DIESEL CORPORATION

Engine Part (Standard Size, New)	Minimum	Maximum	Limits
Height Above Cylinder Head	37.5 mm (1.476 in.)	38.0 mm (1.496 in.)	-
Diameter (inside)	8.759 mm (0.345 in.)	8.785 mm (0.346 in.)	-
Clearance (valve-to-guide, maximum)	-	-	0.060 mm (0.002 in.) Intakes 0.073 mm (0.003 in.) Exhaust

Table 1-43 Valve Guides (Natural Gas)

Engine Part (Standard Size, New)	Minimum	Maximum	Limits
Rocker Shaft Diameter	35.992 mm (1.417 in.)	36.017 mm (1.418 in.)	35.941 mm (1.415 in.)
Steel Rocker Arm Bushing Diameter (inside)	36.017 mm (1.418 in.)	36.118 mm (1.422 in.)	36.195 mm (1.425 in.)
Clearance (shaft to bushing) (maximum): Bronze Bushing	-	-	0.057 mm (0.0022 in.)
Steel Bushing	-	-	0.254 mm (0.010 in.)

Table 1-44 Rocker Arms and Shafts (Diesel)

Engine Part (Standard Size, New)	Minimum	Maximum	Limits
Rocker Shaft Diameter	35.992 mm (1.417 in.)	36.017 mm (1.418 in.)	35.941 mm (1.415 in.)
Clearance (shaft to bushing) (maximum): Bronze Bushing	-	-	0.057 mm (0.0022 in.)

Table 1-45 Rocker Arms and Shafts (Natural Gas)

Engine Part (Standard Size, New)	Minimum	Maximum	Limits
Diameter	37.95 mm (1.494 in.)	38.05 mm (1.498 in.)	-
Rollers and Pins:	-	-	-
Clearance (pin-to-bushing) (maximum) (horizontal)	-	-	0.08 mm (0.003 in.)
Side Clearance (roller-to-follower) (maximum)	-	-	0.40 mm (0.015 in.)

Table 1-46 Cam Follower Roller

(Rev. 2004) *All information subject to change without notice.*
6SE483 0401 Copyright © 2004 DETROIT DIESEL CORPORATION

Exceptions to Standard Fastener Torque Specifications

Listed in Table 1-47 are exceptions to standard fastener torque specifications supporting the Series 60 Engine.

Section	Fastener	Size	N · m	(lb·ft)
Refer to section 1.6.3.1	Breather Housing to Rocker Cover Cap	-	2.5	1.833
Refer to section 1.2.5	Cylinder Head Bolt (torque twice)	M16 X 2.0	250 - 285	(185 - 210)
Refer to section 2.3.5	Bolt, Inj. Harness Mounting Flange	M8 X 1.25	10-15	(7-11)
Refer to section 1.6.8 and refer to section 1.6.9	Bolt, Rocker Cover-to Cylinder Head	3/8-16	20-25	(15-18)
Refer to section 1.9.3	Bolt, Main Bearing Cap	M20 X 2.5	470-530	(347-391)
Refer to section 1.10.3	Plug, Gear Case Adj. Idler Oil Hole	5/16-24	15-20	(11-15)
Refer to section 1.13.3	Bolt, Front Pulley	9/16-18	182-210	(134-155)
Refer to section 1.16.3	Bolt, Flywheel Hsg. Mounting	M12 X 1.75	112-126	(83-93)
Refer to section 1.14.3	Bolt, Flywheel	9/16-18	68(+120°)	(50)(+120°)
Refer to section 1.20.4	Nut, Connecting Rod	M14 X 1.5	160-185	(118-137)
Refer to section 1.24.6	Bolt, Camshaft Bearing Cap	M12 X 1.75	126-146	(93-108)
Refer to section 1.3.3	Bolt, Rocker Arm Shaft	M12 X 1.75	126-146	(93-108)
Refer to section 1.24.6	Nut, Nos. 1&7 Camshaft Cap	M12 X 1.75	126-146	(93-108)
Refer to section 1.24.6	Stud, Nos. 1&7 Camshaft Cap	M12 X 1.75	126-146	(93-108)
Refer to section 1.25.4	Bolt (Solid), Camshaft Drive Gear	M18 X 1.5	75	(55 + 120°)
Refer to section 1.26.3	Nut, Adjustable Idler Assy.	M12 X 1.75	57-67	(42-49)
Refer to section 1.27.3	Bolt, Bull Gear Assy-to-Block	M12 X 1.75	101-116	(75-86)
Refer to section 1.27.3	Nut, Bull Gear Assy (LH thread)	2-1/2-18	940-1000	(693-738)
Refer to section 1.29.4	Nut, Accessory Drive Pulley	M24 X 1.0	220-250	(162-185)

Table 1-47 Exceptions to Standard Fastener Torque Specifications

 Copyright © 2004 DETROIT DIESEL CORPORATION

 Copyright © 2004 DETROIT DIESEL CORPORATION

2 FUEL SYSTEM

Section		Page
2.1	DIESEL FUEL SYSTEM OVERVIEW	2-5
2.2	VEHICLE SAFETY FOR THE NATURAL GAS ENGINE	2-7
2.3	ELECTRONIC UNIT INJECTOR	2-11
2.4	FUEL INJECTOR TUBE AND O-RING	2-30
2.5	N3 ELECTRONIC UNIT INJECTOR	2-46
2.6	FUEL INJECTOR TUBE	2-60
2.7	FUEL PUMP WITH SEPARATE DRIVE SHAFT AND HUB	2-64
2.8	FUEL PUMP WITH ONE-PIECE DRIVE SHAFT AND HUB ASSEMBLY	2-87
2.9	FUEL PUMP DRIVE	2-110
2.10	DIESEL FUEL FILTERS (SPIN-ON)	2-115
2.11	FUEL PRO 380/380E FUEL FILTER SYSTEM	2-124
2.12	SEA PRO 150/300 DIESEL FUEL PROCESSOR SYSTEM (MARINE)	2-131
2.13	SEA PRO 152 FUEL FILTER SYSTEM (MARINE ENGINE)	2-139
2.14	FUEL FILTER TYPE FOR THE SERIES 60G ENGINE	2-148
2.15	FUEL COOLER (HEAT EXCHANGER-COOLED MARINE ENGINE)	2-157
2.16	ASSEMBLY FUEL FILTER AND WATER SEPARATOR	2-161
2.17	ELECTRONIC ENGINE CONTROL	2-169
2.18	DDEC V ELECTRONIC CONTROL UNIT	2-171
2.19	DDEC III/IV ELECTRONIC CONTROL MODULE	2-179
2.20	DDEC II ELECTRONIC CONTROL MODULE	2-187
2.21	DDEC I	2-199
2.22	PROGRAMMABLE READ-ONLY MEMORY (PROM) DDEC I	2-205

2.23 ELECTRONIC DISTRIBUTOR UNIT DDEC I 2-209
2.24 ELECTRONIC FOOT PEDAL ASSEMBLY 2-213
2.25 TURBO BOOST PRESSURE SENSOR 2-214
2.26 AIR INTAKE PRESSURE SENSOR 2-216
2.27 OIL PRESSURE SENSOR 2-219
2.28 OIL TEMPERATURE SENSOR 2-221
2.29 AIR TEMPERATURE SENSOR 2-223
2.30 AIR TEMPERATURE SENSOR FOR HIGH PRESSURE FUEL SYSTEM 2-227
2.31 COOLANT TEMPERATURE SENSOR 2-229
2.32 SYNCHRONOUS REFERENCE SENSOR 2-231
2.33 TIMING REFERENCE SENSOR 2-234
2.34 COOLANT LEVEL SENSOR 2-236
2.35 FUEL PRESSURE SENSOR 2-240
2.36 FUEL TEMPERATURE SENSOR 2-243
2.37 EXHAUST GAS OXYGEN SENSOR FOR SERIES 60G ENGINES 2-247
2.38 EXHAUST TEMPERATURE SENSOR FOR THE SERIES 60G ENGINES 2-251
2.39 KNOCK SENSOR AND SIGNAL NOISE ENHANCEMENT FILTER MODULE 2-252
2.40 BAROMETRIC PRESSURE SENSOR FOR THE SERIES 60G ENGINE WITH HIGH PRESSURE FUEL SYSTEM 2-255
2.41 OVERVIEW OF HIGH PRESSURE FUEL SYSTEM FOR SERIES 60G ENGINES 2-257
2.42 FUEL PRESSURE GAGES FOR THE SERIES 60G ENGINE WITH A HIGH PRESSURE FUEL SYSTEM 2-263
2.43 VENTING AND LEAK CHECKING PROCEDURES FOR A NATURAL GAS ENGINE (HIGH PRESSURE SYSTEM) 2-265
2.44 HIGH PRESSURE FUEL REGULATOR FOR THE SERIES 60G ENGINE 2-269
2.45 PULSE WIDTH MODULATED STEPPER MOTOR VALVE (PSV) FOR SERIES 60G AUTOMOTIVE ENGINES 2-271

 Copyright © 2004 DETROIT DIESEL CORPORATION

2.46 FUEL MIXER FOR THE SERIES 60G HIGH PRESSURE FUEL SYSTEM 2-275
2.47 FUEL SHUTOFF VALVE FOR SERIES 60G ENGINE WITH HIGH PRESSURE FUEL SYSTEM 2-278
2.48 IMPCO LOW PRESSURE FUEL REGULATOR FOR THE SERIES 60G ENGINE HIGH PRESSURE FUEL SYSTEM 2-280
2.49 OVERVIEW OF THE LOW PRESSURE NATURAL GAS FUEL SYSTEM 2-284
2.50 LOW PRESSURE FUEL REGULATOR FOR THE SERIES 60G ENGINE 2-289
2.51 FUEL MIXER FOR THE SERIES 60G LOW PRESSURE SYSTEM 2-293
2.52 VENTING AND LEAK CHECKING PROCEDURES FOR NATURAL GAS ENGINE (LOW PRESSURE SYSTEM) 2-296
2.A ADDITIONAL INFORMATION 2-299

 Copyright © 2004 DETROIT DIESEL CORPORATION

 Copyright © 2004 DETROIT DIESEL CORPORATION

2.1 DIESEL FUEL SYSTEM OVERVIEW

For a schematic diagram of a typical diesel fuel system, see Figure 2-1.

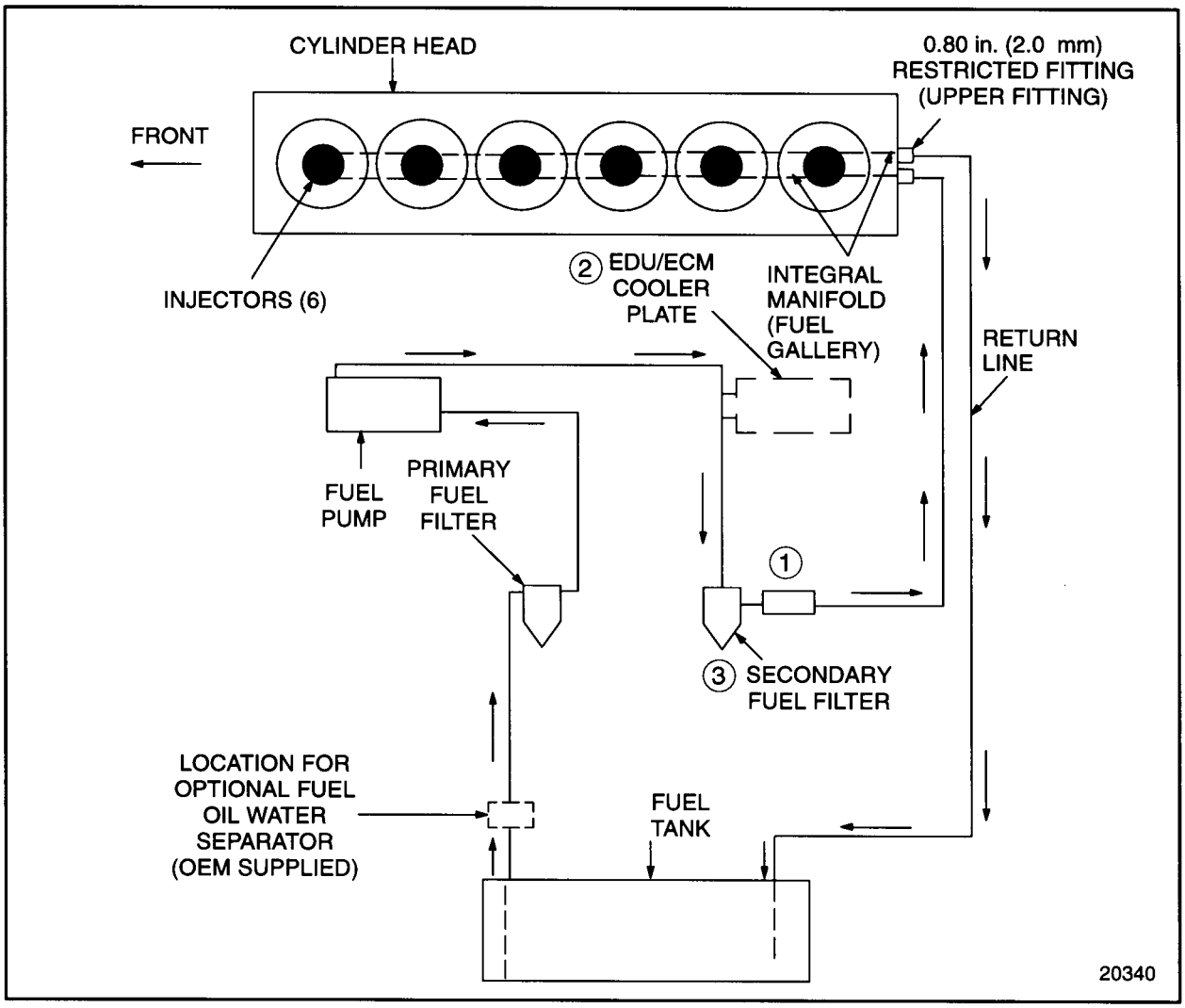

1. Effective with 6R56762, a manually operated fuel shutoff valve replaced a check valve. A PRO-CHEK ® valve may be installed at this location to remove air.

2. Effective with 6R8950, the ECM/EDU cooler unit was removed from all Series 60 engines used in on-highway applications.

3. Effective with unit 6R13060, a fuel system check valve is installed in the secondary fuel filter head to prevent fuel drainback when filters are changed.

Figure 2-1 Schematic Diagram of the Diesel Fuel System

 Copyright © 2004 DETROIT DIESEL CORPORATION

The fuel system includes injectors, integral fuel manifold in the cylinder head, fuel pump, a cooling plate for the Electronic Control Module (ECM) or Electronic Distributor Unit (EDU), a primary fuel filter, a secondary fuel filter, and a fuel check valve if equipped. An 0.080 in. (2.0 mm) restrictive orifice is located in the fuel return fitting at the rear of the cylinder head to maintain the pressure in the fuel system. See Figure 2-1 for fuel recommendations.

CAUTION:

To avoid injury from fire caused by heated diesel-fuel vapors:

- ☐ **Keep those people who are not directly involved in servicing away from the engine.**
- ☐ **Stop the engine immediately if a fuel leak is detected.**
- ☐ **Do not allow open flames or smoke when working on an operating engine.**
- ☐ **Wear adequate protective clothing (face shield, insulated gloves and apron, etc.).**
- ☐ **To prevent a buildup of potentially volatile vapors, keep the engine area well ventilated during operation.**

Diesel fuel is relatively harmless at ambient temperatures.

Fuel is drawn from the fuel tank through an optional fuel water separator, into the primary fuel filter and enters the pump. After leaving the fuel pump under pressure, the fuel flows through the EDU/ECM cooler plates (if equipped) through the secondary fuel filter to the cylinder head. For units prior to 6R56762, the fuel flows through a check valve prior to entering the cylinder head.

An optional PRO-CHEK® check valve that removes air from the fuel supply line may be installed between the secondary filter and the cylinder head. The fuel flows to the injectors in the cylinder head through passages integral with the head. Surplus fuel exits at the rear of the head just above the inlet, through a restrictive return fitting which maintains fuel pressure in the system and returns back to the fuel tank.

NOTE:
Effective with unit 6R8950, the cooler plate was removed from all Series 60 engines used in on-highway applications. Effective with unit 6R13060, a fuel system check valve is installed in the secondary fuel filter to prevent fuel drainback when filters are changed.

NOTE:
Effective with 6R56762, a manually operated fuel shutoff valve has replaced the former valve.

(Rev. 2004) *All information subject to change without notice.*
6SE483 0401 Copyright © 2004 DETROIT DIESEL CORPORATION

2.2 VEHICLE SAFETY FOR THE NATURAL GAS ENGINE

Today, a wide variety of vehicles from passenger cars to pickup trucks to school busses operate on one of the most plentiful fuels available, compressed natural gas. There are some very good reasons for this.

Natural gas is one of the most environmentally friendly fuels available. When burned, it produces far fewer air pollutants than conventional gasoline - up to 90 percent less carbon monoxide and up to 85 percent less reactive hydrocarbons - and contains no particulates. Further, it produces far less carbon dioxide (a "greenhouse gas") than conventional fuels. This makes natural gas an ideally friendly fuel for the environment.

2.2.1 Natural Gas Vehicles - The Safe Alternative

Safety is probably among the chief concerns when adding NGVs to a fleet. Although gasoline and diesel seem safer because they have been around for a very long time, natural gas has many characteristics that actually make it safer than these more familiar fuels.

First of all, natural gas is lighter than air, so it will not pool on or near the ground. When accidentally released in an unconfined space, it quickly disperses in the atmosphere, away from the scene of an accident.

Natural gas also has a high ignition temperature, igniting at around 1,350°F, compared to between 400°F and 900°F for gasoline and diesel. What's more, natural gas has a narrower flammability range than other fuels including liquid petroleum gas (LPG). Natural gas is only flammable in concentrations above 5.3 percent in air. Gasoline, diesel and LPG, on the other hand, are flammable at much lower concentrations, above 0.5 percent to 2 percent.

The upper limit of the flammability range of natural gas at about 15 percent, is a bit higher than other fuels. Because natural gas disperses quickly it is highly unlikely it will collect in a flammable concentration in the open air.

Natural gas is a safe fuel for other reasons as well. Unlike gasoline or diesel, it is nontoxic, non-caustic and poses no threat to land or water in the case of a spill. Also, several studies relating to the safety of operating NGVs in tunnels, in parking garages and on ferries have shown that natural gas poses no greater hazard than conventional fuels.

But what if natural gas is released in a confined space? Won't it float to the ceiling in a garage, for example? That is a concern. Experts recommend, and regulations in some cases require, that shops servicing NGVs install a methane detector and ensure there are not areas in the service area where natural gas could collect in dangerous concentrations if released. Adequate ventilation is also important, but natural gas's lighter-than-air properties make it easier to ventilate than the heavier vapors of gasoline, diesel and LPG. Check with your gas company or contractor to be certain, but you shouldn't have to augment your existing air-handling system to service NGVs.

 Copyright © 2004 DETROIT DIESEL CORPORATION

2.2.2 Safety Standards

Products manufactured for the NGV industry - from under-hood components to fuel-pump nozzles - are governed by a variety of standards to ensure safety. For example, onboard components including pressure regulators, valves, fueling nozzles and connectors, etc., must be certified by International Approval Services, jointly sponsored by American Gas Association Labs and Canadian Gas Association Labs. The National Fire Protection Association (NFPA) has created a safety standard (NFPA 52) for equipment installation and fueling infrastructure. The Uniform Fire Code (Article 52, Standard No. 52-1) also addresses NGV safety issues relating to fueling stations, including fueling indoors. The Compressed Gas Association has numerous standards pertaining to cylinders.

Through several NGV Coalition committees, the industry has created a series of strict voluntary standards and continues to improve and add to these. Standards for fueling connectors and cylinders are already on the books (known as ANSI/NGV1 and ANSI/NGV2, respectively).

As a fleet operator, you needn't become a NGV standards expert, but you can rest assured the industry is working hard to address safety concerns and ensure NGVs perform as safe and safer than conventional vehicles. As you introduce NGVs to your fleet and need to know more about which safety standards apply to your operation, consult your gas company representative. Your gas company probably has several NGVs in its fleet and has worked with local officials on meeting codes. If your local fire marshal isn't familiar with NGVs, your gas company representative in many cases can put him or her in touch with someone who is.

2.2.3 Cylinder Safety

Fuel for NGVs is stored in cylinders under pressure, typically at 3,000 or 3,600 pounds per square inch (psi). To the uninitiated this sounds hazardous just by definition. As one industry report notes, "There is no doubt that carrying a highly pressurized fuel onboard a vehicle represents a ‘high perceived risk' which simply does not occur on conventionally fueled vehicles." The NGV industry, to its credit, has made addressing any risks, perceived or real, a top priority, and this is particularly evident in the area of storage container (cylinder) safety.

In recent years the industry has developed strict voluntary standards for cylinders in conjunction with governmental bodies such as the American National Standards Institute (ANSI). In 1994, the National Highway Traffic Safety Administration (NHTSA) adopted a set of regulations (known as DOT 304) governing cylinder durability, strength and pressure relief. The regulations also set testing criteria and generally follow the industry's existing ANSI/NGV2 standard. In the future NHTSA will codify additional standards, including cylinder resistance to chemical corrosion.

Cylinders undergo a variety of rigorous tests. In the bonfire test, as its name suggests, a pressurized cylinder is subjected to flames of around 1,200°F (649°C) to determine its resistance to bursting. To pass the test, the cylinder must remain intact long enough to safely release its contents. A pressure-relief device, required by NHTSA rules, vents the contents when the cylinder reaches about 210°F (98°C) to 220°F (104°C), and the cylinder typically remains intact for another 100 degrees beyond that. Cylinders must also pass a pressure test that subjects them to 18,000 cycles of pressurization and depressurization.

(Rev. 2004) *All information subject to change without notice.*
6SE483 0401 Copyright © 2004 DETROIT DIESEL CORPORATION

Manufacturers also test cylinders for resistance to rough handling and impact by dropping them from a certain height, hitting them with a heavy weight or gouging them. The cylinders are then cycled the equivalent of a million miles of operation. In the gunfire test, manufacturers test the resistance of a cylinder to fragmentation by shooting it. Cylinders have also shown their durability in crash tests featured in informational videos produced by the NGV Coalition and others. In these tests, cylinders are mounted in a vehicle that is then dropped from several feet. The cylinders come through unscathed, even though the car is demolished.

Commenting on cylinder safety, one industry expert notes that the science of designing safe pressurized cylinders is by no means new, and the safety record is excellent. For example, some 1.4 million cylinders have been used by firemen for more than 15 years with only two catastrophic accidents, he notes, and those cylinders, pressurized to 4,500 lb/in.^{2}, are not mounted in a vehicle but carried on a person's back.

2.2.4 Fueling Safety

When designing for safety, companies manufacturing fuel dispensers for compressed natural gas typically concentrate on two areas: hardware and what engineers call the "fill routine." For example, some dispenser valves are designed to shut off the flow of fuel if needed or vent the gas away from the dispenser in a closed-loop return system. Dispensers also have what is called "driveway protection." If someone drives away while fueling, a breakaway device on the dispenser ensures that the hose won't rupture or topple the dispenser. By the way, the breakaway force, according to code, for compressed natural gas dispensers is about 44 pounds vs. 250 pounds for gasoline pumps.

To guard against overfilling or any other kind of uncontrolled fill, dispensers are designed to monitor, either mechanically or electronically, whether the vehicle is receiving the amount of fuel it should. If the fill pressure rises beyond a predetermined level, the dispenser shuts off automatically. By the same token, if there's no pressure or a sudden loss in pressure - as in the case of an aborted fill or a hose being cut, - it also shuts off.

Natural gas fuel dispensers are designed to be as easy to use and as similar to conventional fuel dispensers as possible, with safety and convenience in mind. With a minimum of training, anyone who can pump gasoline can safely dispense natural gas.

2.2.5 Safety Training

When it comes to dealing with any fuel, it is important that technicians and vehicle drivers learn about safety. Technicians working with liquid fuels have learned to keep them contained, keep them off their skin, and keep them away from any source of ignition. They have learned, too, what to do in the event of a spill or leak.

In the same way, NGV technicians and drivers need to learn how to safely handle a gaseous fuel, natural gas. While working with a gaseous fuel that's under pressure may be no more inherently hazardous than working with a liquid fuel, it is different. To do their jobs safely, your technicians and drivers need to know what the differences are and how to work with them.

 Copyright © 2004 DETROIT DIESEL CORPORATION

2.2.6 Fueling Vehicles

Unlike liquid fuels which are simply poured into a fuel tank, CNG fuel systems require a closed fuel dispensing system that allows the natural gas to flow into the fuel cylinder without leaking into the atmosphere. Such a system must use ANSI (American National Standards Institute) NGV1-standard fuel nozzles which will not allow the CNG to flow unless the nozzle is properly connected to the vehicle fuel inlet. Such a system will also comply with the NFPA (National Fire Protection Association) standards for fueling station construction and safety.

The typical commercial natural gas dispenser looks a lot like a gasoline pump. It has a hose that connects easily to the vehicle fuel inlet with a snap-type coupling device and a meter that indicates how much fuel has been pumped. Once the cylinders are full, the pump shuts off automatically.

Most stations can fill fuel cylinders on a "quick fill basis" or on a "timed fill" basis. With a "quick fill" system cylinders can be filled in about five minutes. Stations with "timed fill" systems may take longer, depending on the number of vehicles being fueled and the size or capacity of the fueling unit. Many fleets operate their own timed fill stations because this allows them to fill their vehicles unattended at night.

Home dispensers for natural gas are also available. These are about the size of a window air conditioner and can be hooked up directly to the natural gas supply of the home. Home dispensers normally use the "timed fill" principle so a vehicle can be fueled overnight.

(Rev. 2004) *All information subject to change without notice.*
6SE483 0401 Copyright © 2004 DETROIT DIESEL CORPORATION

2.3 ELECTRONIC UNIT INJECTOR

The Electronic Unit Injector (EUI) is a lightweight, compact unit that injects diesel fuel directly into the combustion chamber. See Figure 2-2. The amount of fuel injected and the beginning of injection timing is determined by the ECM. The ECM sends a command pulse which activates the injector solenoid. The EUI performs four functions:

- ☐ Creates the high-fuel pressure required for efficient injection.
- ☐ Meters and injects the exact amount of fuel required to handle the load.
- ☐ Atomizes the fuel for mixing with the air in the combustion chamber.
- ☐ Permits continuous fuel flow for component cooling.

Engine combustion is obtained by injecting, under pressure, a small quantity of accurately metered and finely atomized fuel oil into the cylinder. Metering and timing of the fuel is accomplished by the ECM which actuates the solenoid poppet valve to stop the free flow of fuel through the injector. When the solenoid poppet valve closes, fuel is trapped in the injector body and under the plunger. The continuous fuel flow through the injector prevents air pockets in the fuel system and cools those injector parts subjected to high combustion temperatures.

NOTE:
Do not test new or reliabilt® remanufactured electronic unit injectors prior to installation in the engine. The Kent-Moore® POP stand should only be used as a diagnostic tool on fuel injectors that have been removed from an engine.

 Copyright © 2004 DETROIT DIESEL CORPORATION

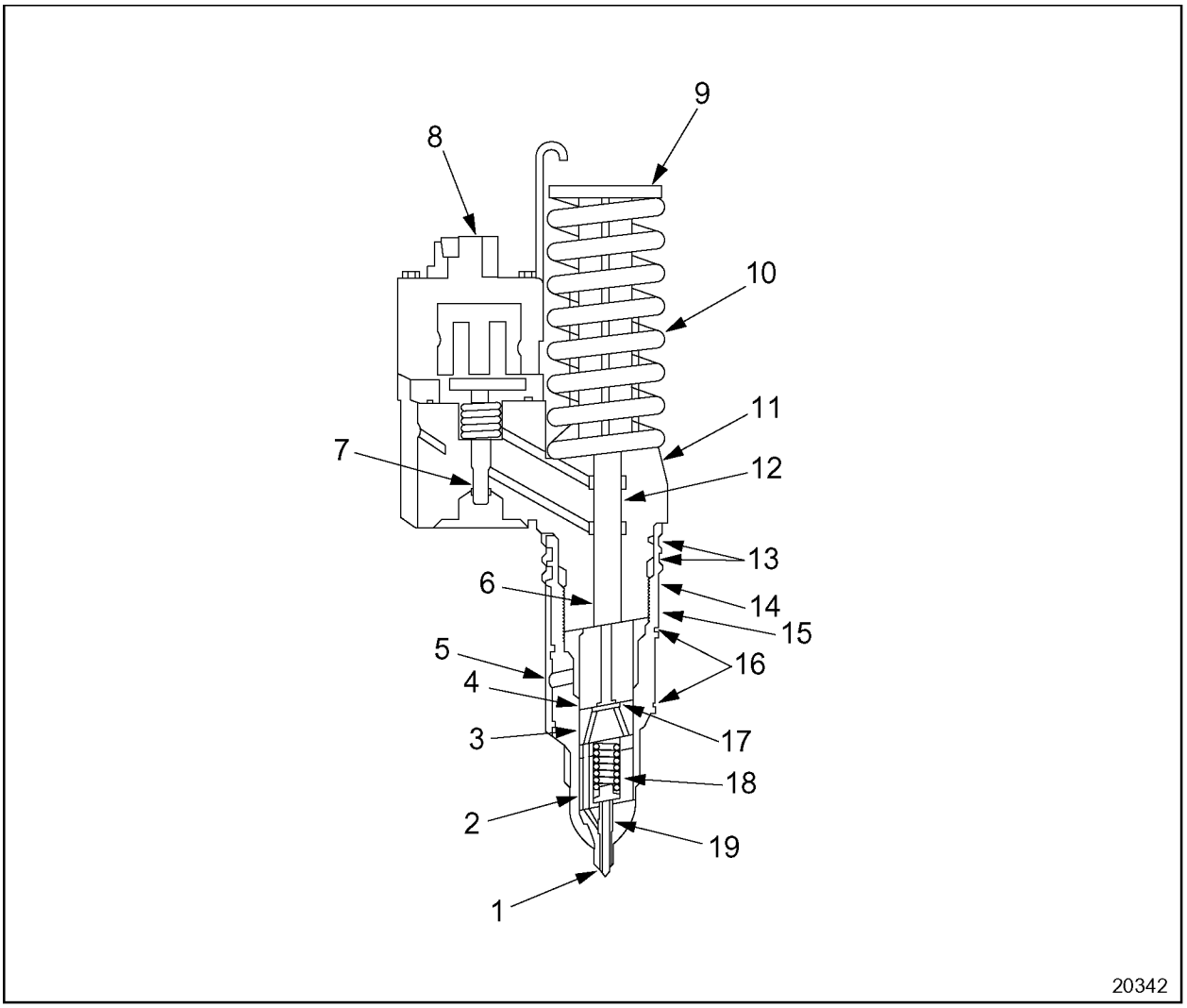

1. Spray Tip
2. Spring Cage
3. Check Valve Cage
4. Spacer
5. Fuel Inlet Opening
6. Fuel Supply Chamber
7. Poppet Control Valve
8. Solenoid
9. Injector Follower
10. Injector Follower Spring
11. Injector Body
12. Plunger
13. Upper O-ring Grooves and Seals
14. Fuel Outlet Openings
15. Injector Nut
16. Lower O-rings Grooves and Seals
17. Flat Disk Check Valve
18. Injector Needle Valve Spring
19. Needle Valve

Figure 2-2 Electronic Unit Injector Cross-section

(Rev. 2004) *All information subject to change without notice.*
6SE483 0401 Copyright © 2004 DETROIT DIESEL CORPORATION

Fuel enters the injector through the two fuel inlet filter screens located around the injector body. See Figure 2-3. Filter screens are used at the fuel inlet openings to prevent relatively coarse foreign material from entering the injector.

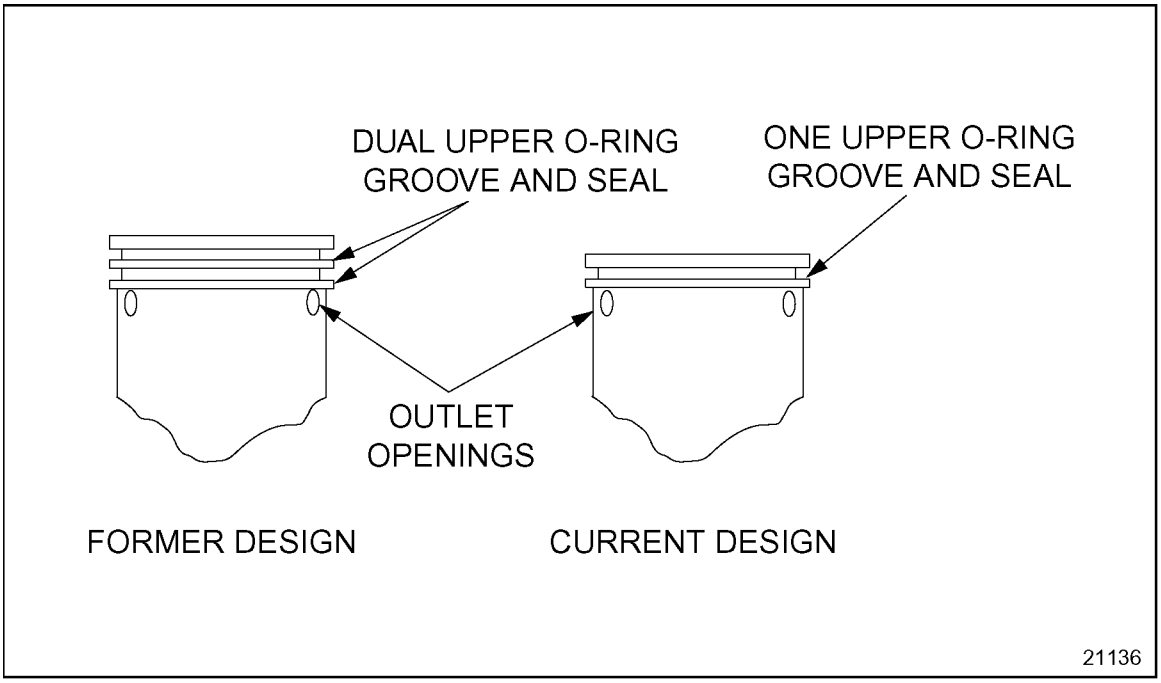

Figure 2-3 Fuel Injector Body

NOTE:
Effective with September, 1988 production, Series 60 engine EUI nuts incorporate one upper seal ring groove and seal ring, instead of two. See Figure 2-4.

 Copyright © 2004 DETROIT DIESEL CORPORATION

Outlet openings, through which the excess fuel oil returns to the fuel return manifold and then back to the fuel tank, are located around the injector nut. See Figure 2-4.

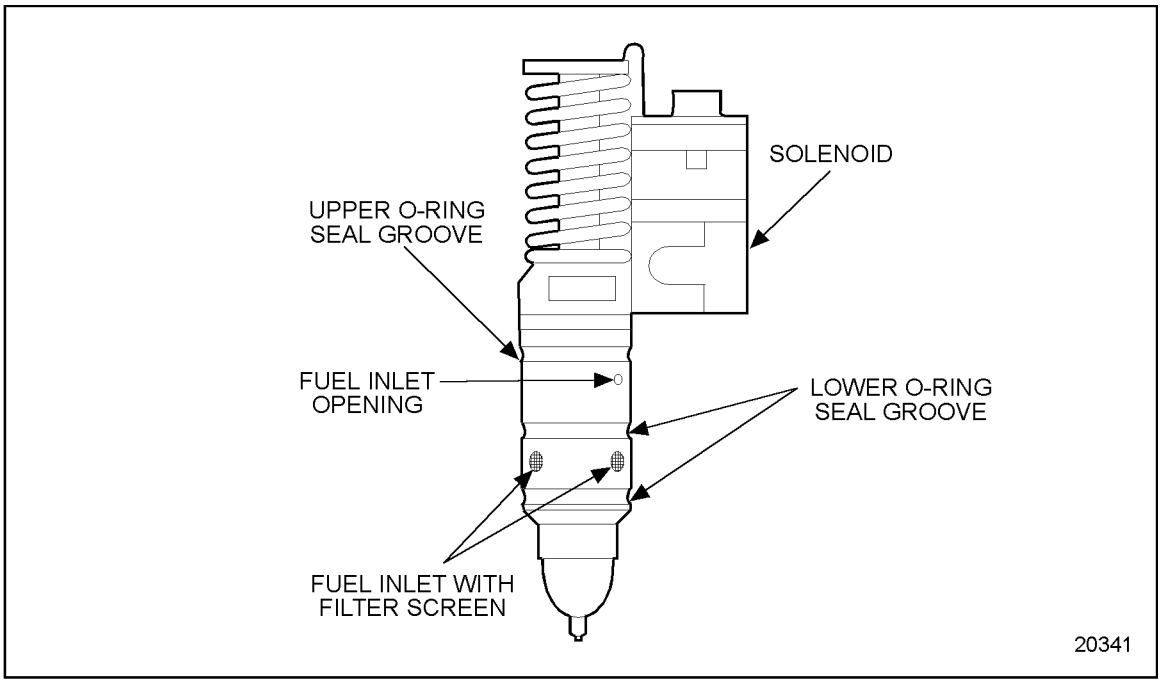

Figure 2-4 Electronic Unit Injector

After entering the nut cavity, the fuel passes through a drilled passage into the poppet control valve and plunger area. See Figure 2-2.

The plunger operates up and down in the body bore of the injector. The motion of the injector rocker arm is transmitted to the plunger and follower that bears against the follower spring.

As the piston moves approximately two-thirds of the way up in the cylinder on the compression stroke, the injector cam lobe begins to lift causing the injector rocker arm to push down on the follower and the plunger. Just before injection begins, the ECM sends an electronic pulse which turns on the injector solenoid. The energized solenoid creates a magnetic force which pulls the armature up, closing the poppet valve and trapping fuel under the plunger and passages leading down to the needle valve. The fuel pressure increases as the plunger continues its downward stroke.

(Rev. 2004) *All information subject to change without notice.*
6SE483 0401 Copyright © 2004 DETROIT DIESEL CORPORATION

A flat disk check valve is built into the injector fuel passages between the plunger and the tip. This check valve normally has no effect on the injection process but will function to prevent cylinder gases from blowing back into the injector and fuel system if a particle of debris should become lodged between the needle and seat or the tip assembly fails.

This fuel pressure acts on the needle valve. When it creates a force high enough to overcome the valve spring force holding the needle on its seat, the needle valve moves up, allowing the high pressure fuel to spray into the combustion chamber. The high pressure of the fuel passing through the small holes in the tip creates a finely atomized spray for combustion within the cylinder.

After the pulse width time has passed, the ECM turns off the current to the injector solenoid. The de-energized solenoid allows a spring to open the poppet valve, permitting the trapped fuel to spill down, dropping the pressure within the injector. When the pressure is low enough the needle valve closes and ends injection.

The beginning of injection and metering of the fuel in relation to the crankshaft position are controlled by the ECM. Injection begins soon after the poppet valve is closed. The valve closing point information, known as the response time feedback, is returned to the ECM. This information is used to monitor and adjust injection timing, thus removing injector-to-injector variation influences on timing. The amount of fuel injected depends on the pulse width stored in the calibration which determines how long the poppet valve remains closed; the larger the pulse width the longer the valve is closed and the more fuel is injected.

When the injector rocker arm has completed its downward travel the injector follower spring returns it to the starting position. As the plunger moves up fuel enters the injector pumping cavity for another injection cycle. The constant circulation of fuel through the injector renews the fuel supply in the chamber and aids the cooling of the injector.

 Copyright © 2004 DETROIT DIESEL CORPORATION

2.3.1 Repair or Replacement of Electronic Unit Injector

To determine if repair is possible or replacement is necessary perform the following procedure. See Figure 2-5.

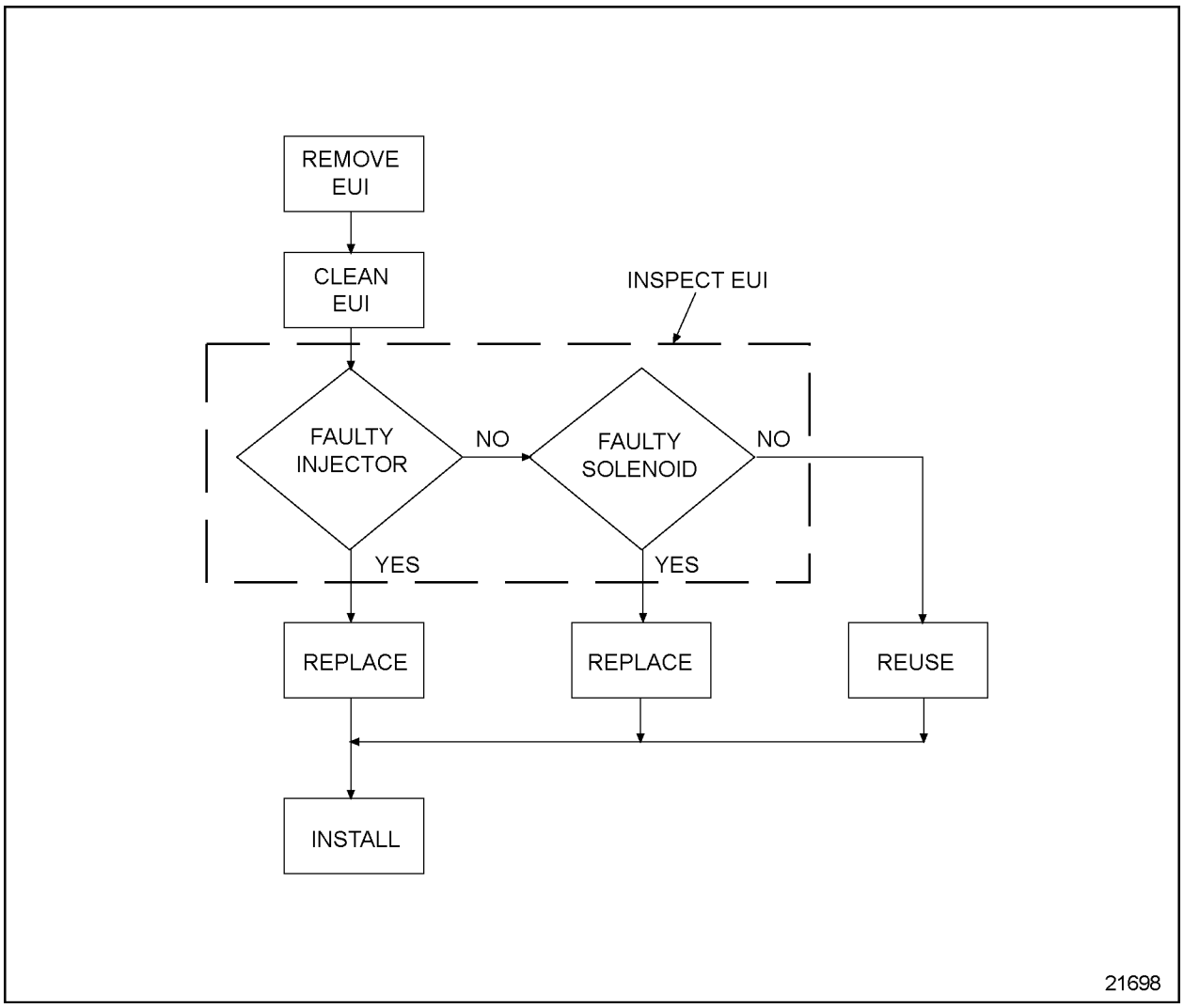

Figure 2-5 Flowchart for Repair or Replacement of Electronic Unit Injector

(Rev. 2004) *All information subject to change without notice.*
6SE483 0401 Copyright © 2004 DETROIT DIESEL CORPORATION

2.3.2 Removal of Electronic Unit Injector

The following steps must be performed prior to removing an injector:

NOTE:
The solenoid can be replaced without removing the injector. Refer to section 2.3.4.

1. Clean the valve rocker cover around its seat on the head, and in the attaching bolt recesses.
   [a] To remove the *one-piece* rocker cover, refer to section 1.6.2.
   [b] To remove the *two-piece*rocker cover, refer to section 1.6.3.
   [c] To remove the *three-piece* rocker cover, refer to section 1.6.5.

CAUTION:

To avoid injury from flying debris when using compressed air, wear adequate eye protection (face shield or safety goggles) and do not exceed 40 psi (276 kPa) air pressure.

NOTICE:

All the fuel must be removed from the cylinder head before removing an injector to prevent the fuel from entering the cylinder and causing hydrostatic lock or washdown. If the head is not thoroughly purged of fuel before an injector is removed, fuel remaining in the fuel manifold will drain into the cylinder filling the piston dome recess. It cannot drain from the dome and, if not removed, can cause hydrostatic lock and bend the connecting rod.

2. Drain the cylinder head fuel gallery by removing the inlet and outlet lines from the fittings at the rear of the cylinder head. Blow low pressure compressed air into the inlet fitting for 20 to 30 seconds or until all of the fuel is purged from the cylinder head. See Figure 2-6.

NOTE:
Front and rear rocker shaft assemblies look identical but are not interchangeable because of different bolt hole center distances. The outboard end of each rocker shaft assembly is marked with the DDC logo for identification. Care should be taken to identify and return assemblies to the proper location if both overhead assemblies are removed.

NOTE:
Loosening the fuel line at the inlet fitting will allow fuel to flow faster. Carefully collect the drained fuel in an appropriate container.

 Copyright © 2004 DETROIT DIESEL CORPORATION

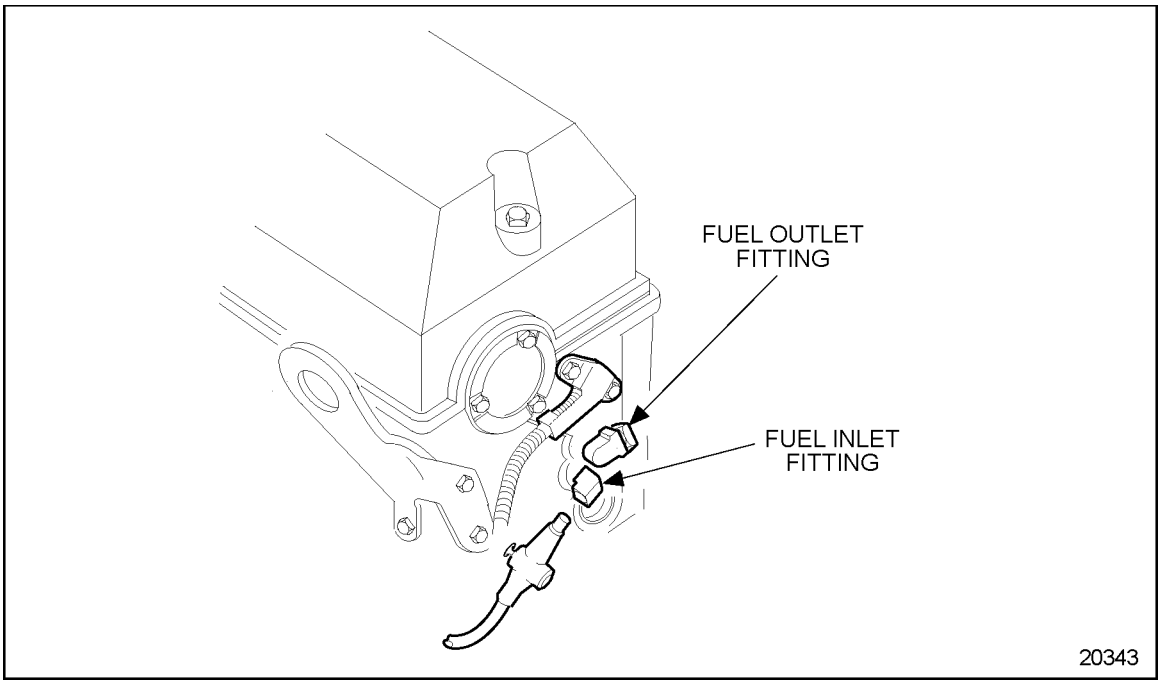

Figure 2-6 Cylinder Head Fuel Fitting Locations

3. Remove the two rocker shaft through-bolts and one nut for each rocker shaft assembly, and lift the rocker shaft assembly off the engine. Refer to section 1.3.2.

To remove the injector, complete the following steps:

NOTICE:
Do not remove the screws from the injector. The wire terminals have keyhole slots to fit over the screw head. Turning the screws too far will damage the threads in the injector solenoid housing.

1. Loosen the injector wire terminal screws two full turns and remove the terminal wires.
2. Remove injector hold down crab.

NOTICE:
Extreme care should be used when handling an EUI to avoid costly damage by dropping or otherwise mishandling the EUI.

NOTE:
When replacing an EUI, always replace the injector O-rings.

(Rev. 2004) *All information subject to change without notice.*
6SE483 0401 Copyright © 2004 DETROIT DIESEL CORPORATION

3. Lift the injector from its seat in the cylinder head by inserting a pry bar under the injector body. See Figure 2-7.

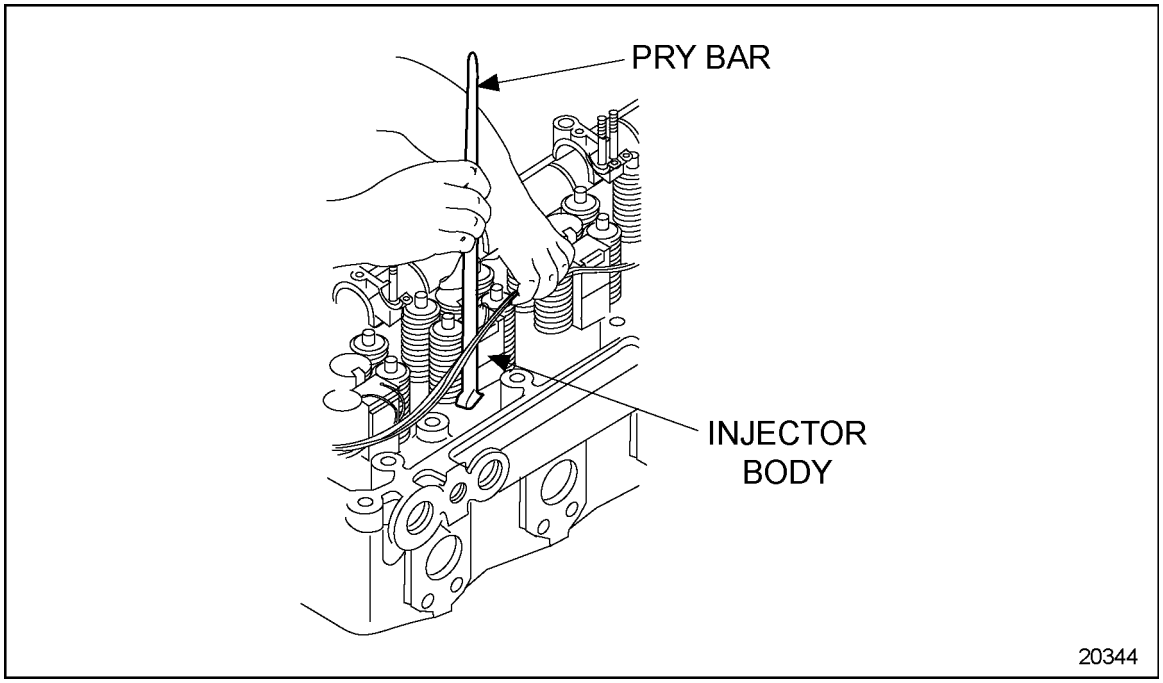

Figure 2-7 Removing Electronic Unit Injector

NOTICE:
Avoid wire brushing the spray holes to prevent damage.

4. Cover the injector hole in the cylinder head to keep out foreign material. Remove carbon from the injector exterior in the area where the tip joins the nut, using wire buffing wheel, J 7944.

 Copyright © 2004 DETROIT DIESEL CORPORATION

2.3.3 Disassembly of Electronic Unit Injector

On a Series 60 engine EUI, only the injector solenoid and seal rings are serviceable. The injector must not be disassembled.

2.3.3.1 Inspection of the Electronic Unit Injector

To clean and inspect the injector, complete the following steps:

NOTE:
The injector can be tested either on or off of the engine.

CAUTION:

To avoid injury from flying debris when using compressed air, wear adequate eye protection (face shield or safety goggles) and do not exceed 40 psi (276 kPa) air pressure.

1. Clean the exterior of the injector with clean solvent and dry it with compressed air.

NOTE:
Do not test new or reliabilt® remanufactured electronic unit injectors prior to installation in the engine. The Kent-Moore® POP stand should only be used as a diagnostic tool on fuel injectors that have been removed from an engine.

2. Test the EUI using J 34760. Follow procedures supplied with this tool. Reuse or replace injector or injector and solenoid as indicated by testing.
3. Inspect the O-rings for damage or foreign material. Replace O-rings.
4. Inspect the fuel injector tubes at the injector seat. If required, replace the fuel injector tubes.

(Rev. 2004) *All information subject to change without notice.*
6SE483 0401 Copyright © 2004 DETROIT DIESEL CORPORATION

2.3.4 Repair of Electronic Unit Injector Solenoid and Seals

Perform the following steps for solenoid replacement:

1. Loosen the injector wire terminal screws two turns and remove terminal wires.
2. Loosen four hex-head screws and remove old solenoid. See Figure 2-8.

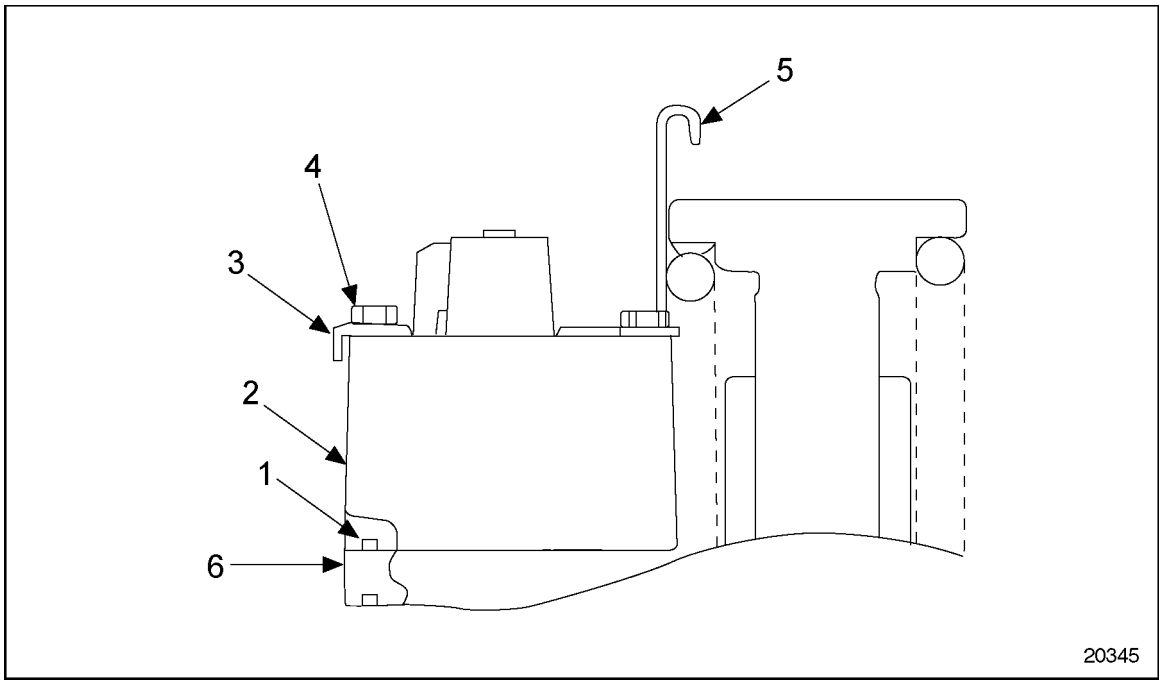

1. Spacer Seals
2. Solenoid
3. Load Plate
4. Screw
5. Follower Retainer
6. Spacer

Figure 2-8 Electronic Unit Injector Solenoid Assembly

 Copyright © 2004 DETROIT DIESEL CORPORATION

3. Perform the appropriate step for the DDEC unit used.
   [a] For DDEC I and DDEC II, discard the solenoid, load plate, follower retainer, and screws. Do not reuse old screws.
   [b] For DDEC III/IV, discard the solenoid, follower retainer, and screws. Do not reuse old screws. The load plate must be reused.

NOTICE:
The spacer is a matched component with the armature and must remain with its respective injector.

4. Remove spacer and seals from injector body.
5. Discard seals, but do not discard spacer.
6. Install new seal in spacer groove and position spacer on body with seal facing down. See Figure 2-8. Seal may be retained in groove with small quantity of grease.
7. Install new seal in solenoid groove.
8. Install solenoid on spacer.

NOTICE:
The load plate on each DDEC III injector is unique and must remain with the injector. The DDEC III load plate carries the injector part number, the injector serial number in bar code format, and the injector calibration code number.

9. Install new screws through the load plate and follower retainer, solenoid, and spacer.

(Rev. 2004) *All information subject to change without notice.*
6SE483 0401 Copyright © 2004 DETROIT DIESEL CORPORATION

10. Thread screws into body and tighten all screws until heads contact retainer and load plate with a slight force (less than 0.6 N·m [5 lb·in.] torque) in the sequence shown. See Figure 2-9.

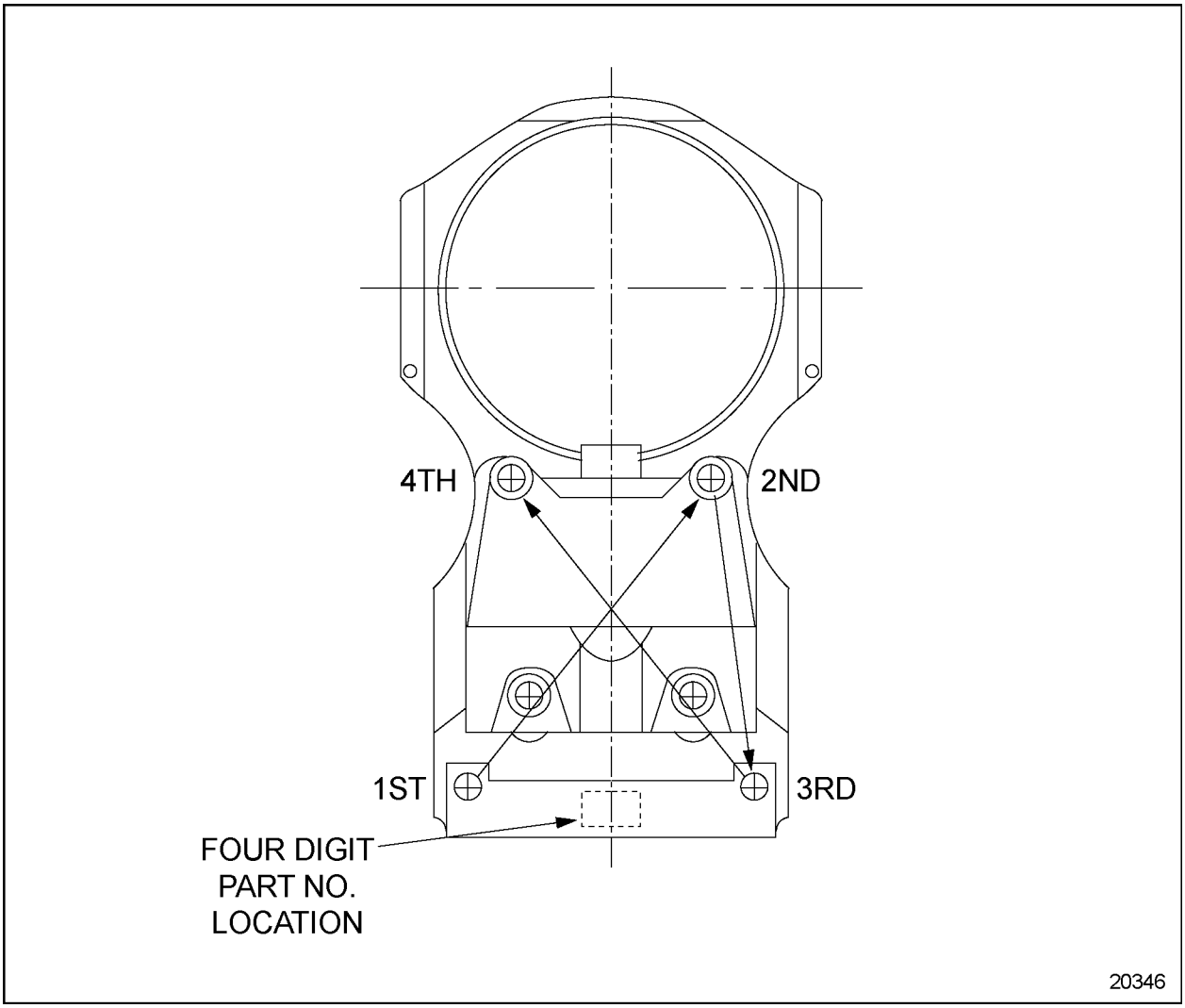

Figure 2-9 Electronic Unit Injector Solenoid Torque Sequence

11. Torque screws to 2 N·m (19 lb·in.) in the sequence shown. See Figure 2-9.
12. On DDEC II injectors only, etch the last four digits of injector part number on the load plate. See Figure 2-9.

 Copyright © 2004 DETROIT DIESEL CORPORATION

2.3.5 Installation of the Electronic Unit Injector

Perform the following steps:

1. If the fuel system is contaminated with coolant:
   [a] Drain the fuel tanks and refill with clean fuel. Refer to section 13.13.2.
   [b] Replace both filters with new, and clean the fuel/water separator, if equipped. Refer to section 13.13.14.
   [c] Inspect fuel injectors for damage and replace as required.
2. If the coolant system is contaminated with fuel, flush and reverse flush the system. Refer to section 13.13.4.

CAUTION:

To avoid injury from flying debris when using compressed air, wear adequate eye protection (face shield or safety goggles) and do not exceed 40 psi (276 kPa) air pressure.

NOTICE:

Leftover fuel must be removed from the injector bore before injector installation. If fuel is trapped between the top of the injector hole tube and the lower injector O-ring seal, it may seep down to the injector hole tube seal ring, causing swelling and possible seal leakage.

3. Using clean compressed air, blow out any fuel remaining in the injector bore.

NOTE:
If the engine is equipped with an auxiliary injector tube seal, replace it with a new seal when the injector is removed.

(Rev. 2004) *All information subject to change without notice.*
6SE483 0401 Copyright © 2004 DETROIT DIESEL CORPORATION

NOTICE:
Do not use a metal dowel as this may damage the seal.

NOTICE:
Injector seals are considered one-use items and cannot be reused. Any time an injector is removed, all three injector nut O-ring seals must be replaced with new seals. Failure to replace seals can result in seal leakage.

4. Detroit Diesel encourages the use of an additional service seal (5104701) that is impervious to both coolant and fuel. This seal should be used in situations where injector tube seal leakage or deterioration is suspected or confirmed. Place the auxiliary seal in the injector hole and seat it against the top of the injector tube with a 41.3 mm (1-5/8 in.) diameter wood or plastic dowel.
5. Check to make sure the injector bore is thoroughly clean.
6. Apply a thin coat of clean ethylene glycol to the injector seal rings and install them in the injector nut ring grooves. Make sure seals are properly seated.
7. Insert the injector into its respective injector tube bore. Visually align the injector body for equal clearance between valve springs (there is no locating dowel pin on the underside of the EUI). After locating the injector, press down on the top of the injector body with the heel of your hand to seat it in the injector tube.

NOTE:
The injector tube bore should be cleaned and inspected for damage before installation of the electronic unit injector. Refer to section 2.4.4.

 Copyright © 2004 DETROIT DIESEL CORPORATION

NOTICE:
The hemispherical portion of the hold-down crab washers must be installed facing the crab (pointing down) in order to prevent damage to the washers. See Figure 2-10.

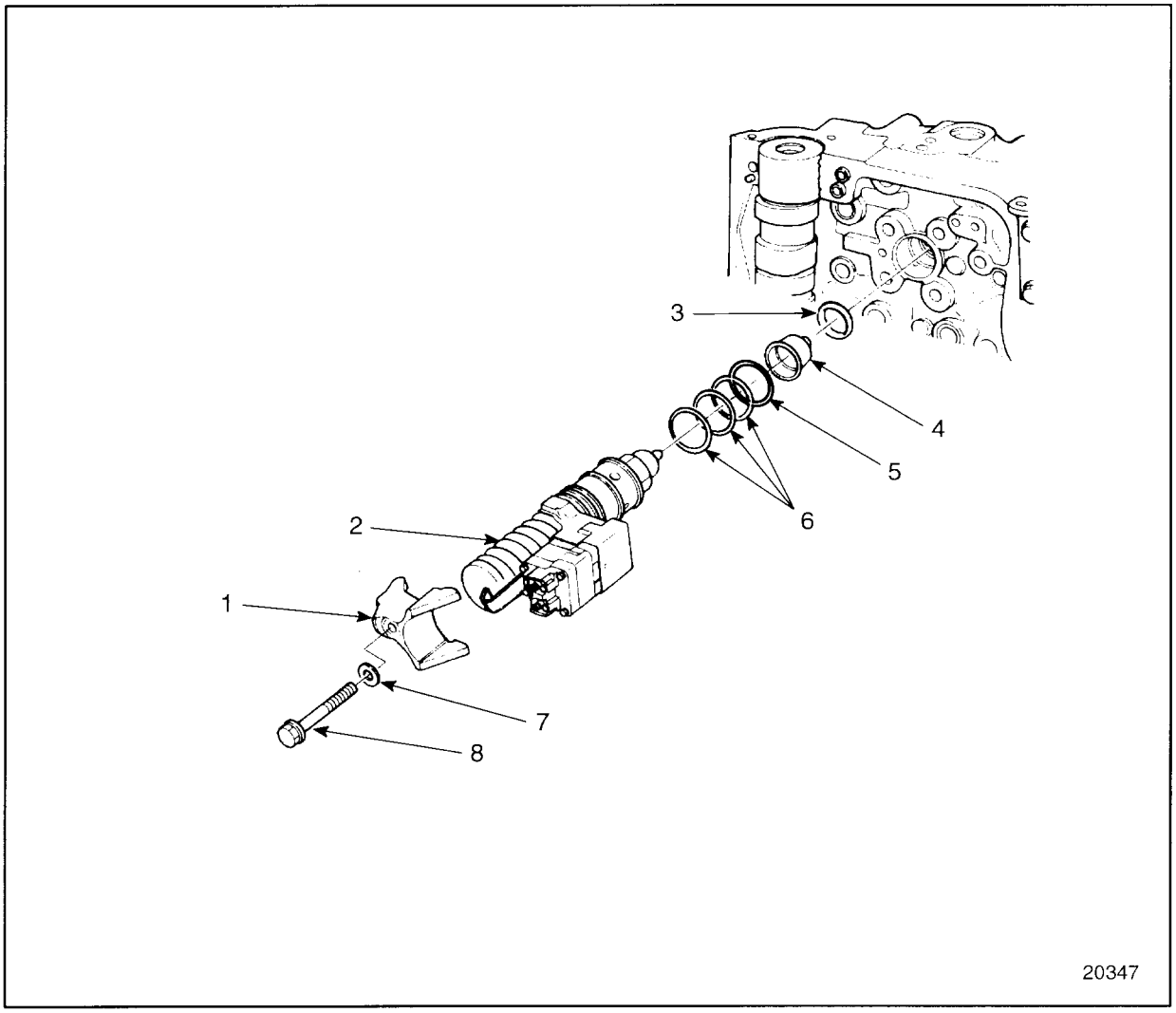

1. Injector Hold-down Crab
2. Electronic Unit Injector
3. Injector Tube O-ring
4. Injector Tube
5. Auxiliary Injector Seal
6. Injector O-rings
7. Hold-down Crab Washer
8. Hold-down Crab Bolt

Figure 2-10 Electronic Unit Injector and Related Parts

(Rev. 2004) *All information subject to change without notice.*
6SE483 0401 Copyright © 2004 DETROIT DIESEL CORPORATION

8. Determine which type of hold-down crab is used by measuring the overall height.
   [a] If the overall height is 54 mm (2.125 in.), proceed to step 9.
   [b] If the overall height is 52 mm (2.047 in.), skip to step 10.
9. Position a 0.762 mm (0.030 in.) feeler gage between the crab and injector spring on the side of the spring that faces the intake manifold.
10. Install the hold-down crab, hemispherical crab washer (flat surface up against bolt) and hold-down bolt to the injector. See Figure 2-11. Ensure the clamp does not interfere with the injector spring or valve springs.
11. Torque the hold-down bolt to 58-66 N·m (43-49 lb·ft).

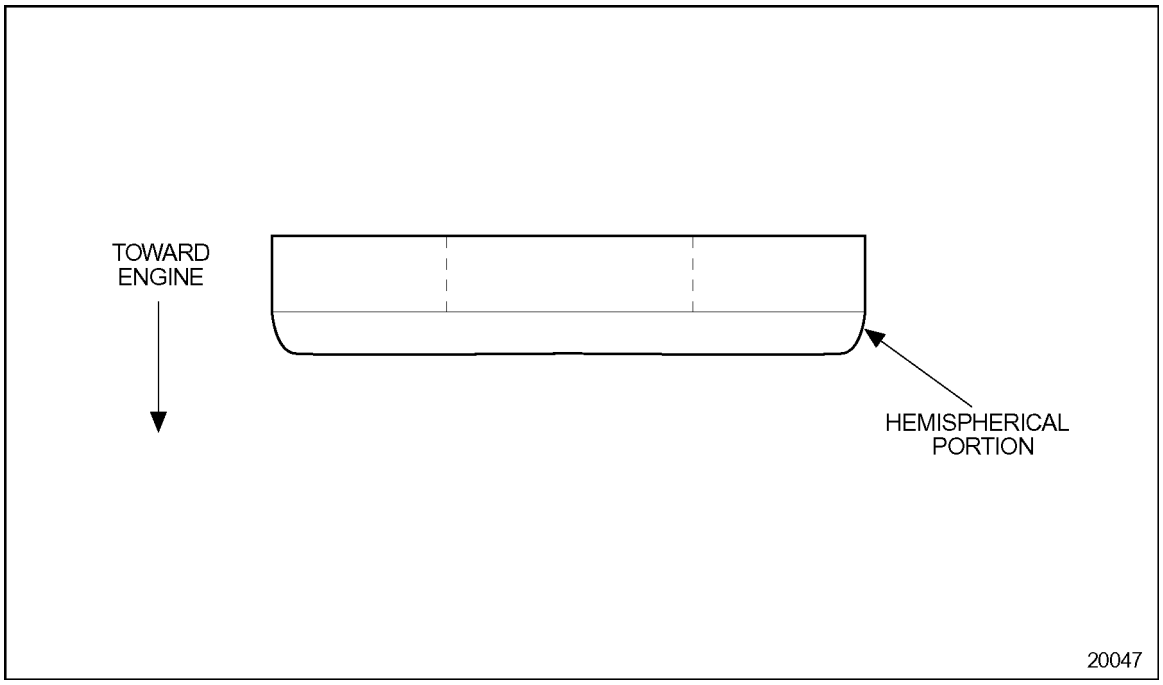

Figure 2-11 Hold-down Crab Washer Installation

 Copyright © 2004 DETROIT DIESEL CORPORATION

12. Install the EUI terminal wires by positioning the keyhole in the terminal over the screw in the injector solenoid housing. Pull the terminal end down so that the screw rests in the smaller slot in the terminal. Torque the terminal screws to 1.08–1.13 N·m (9.5–10.0 lb·in.). Do not bend the terminals down after installation. See Figure 2-12.

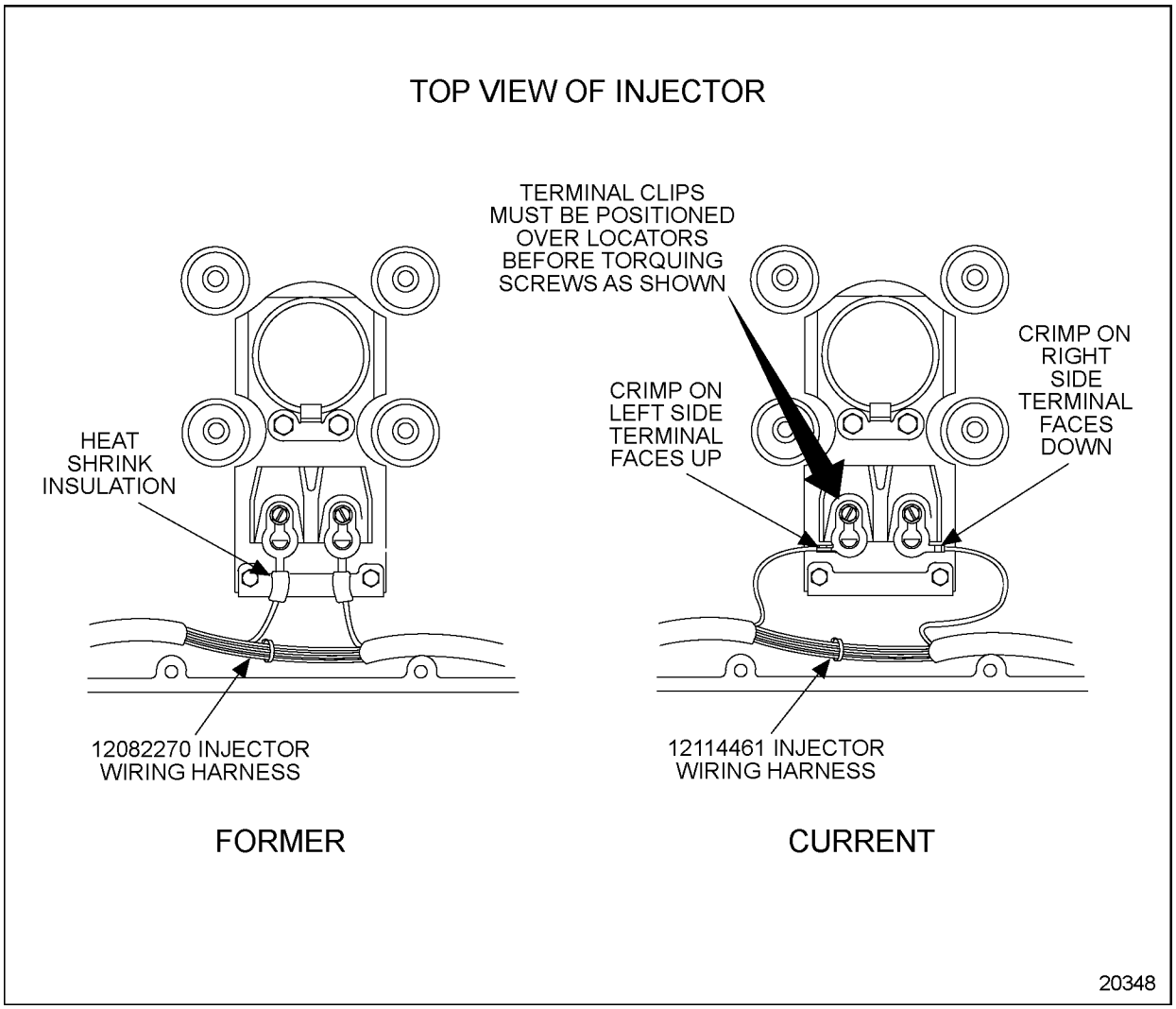

Figure 2-12 Electronic Unit Injector Terminal Installation

(Rev. 2004) *All information subject to change without notice.*
6SE483 0401 Copyright © 2004 DETROIT DIESEL CORPORATION

13. Install the rocker arm shafts, with rocker arms in place. Refer to section 1.3.3.

NOTE:
Front and rear rocker shaft assemblies look identical but are *not interchangeable* due to different bolt-hole center distances. The outboard end of each rocker shaft assembly is marked with the DDC logo for identification. Care should be taken to identify and return assemblies to the proper location if both overhead assemblies were removed.

14. Adjust the intake and exhaust valve clearances and injector height. Refer to section 12.2
15. Install the inlet and outlet fuel lines to the fittings at the rear of the cylinder head. See Figure 2-6.
16. On DDEC III/IV engines, record the injector calibration code from the load plate with the proper cylinder location.
17. Install the valve rocker cover. Refer to section 1.6.7.
18. For one-piece valve rocker cover, refer to section 1.6.8. For two-piece and three-piece valve rocker cover, refer to section 1.6.9.
19. Verify repair of electronic unit injector. Refer to section 11.8.

 Copyright © 2004 DETROIT DIESEL CORPORATION

2.4 FUEL INJECTOR TUBE AND O-RING

The bore in the cylinder head for the EUI is directly through the cylinder head water jacket. To prevent coolant from contacting the injector and still maintain maximum cooling of the injector, a copper tube is pressed into the injector bore. The tube has a ring seal at the top and is flared at the bottom, on the lower side of the cylinder head, to create water and gas-tight joints at the top and bottom.

NOTE:
It is recommended that the injector tube be replaced with new parts at the time of engine overhaul.

2.4.1 Repair or Replacement of Fuel Injector Tube

To determine if repair or replacement of the fuel injector tube is necessary. See Figure 2-13.

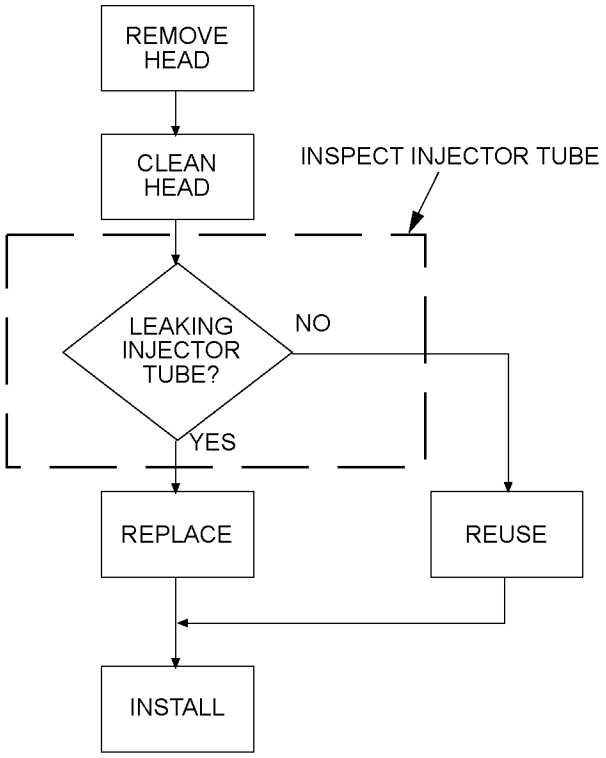

Figure 2-13 Flowchart for Repair or Replacement of Fuel Injector Tube

(Rev. 2004) *All information subject to change without notice.*
6SE483 0401 Copyright © 2004 DETROIT DIESEL CORPORATION

2.4.2 Removal of the Injector Tube and O-ring

When removing an injector tube, use J 33880-4, part of J 33880 and J 5286-5.

1. Remove, disassemble, and clean the cylinder head. Refer to section 1.2.2 .
2. Place J 33880-4, in the injector tube. Insert J 5286-5, through the small opening of the injector tube and thread the pilot into the tapped hole in the end of the installation/removal tool. See Figure 2-14.

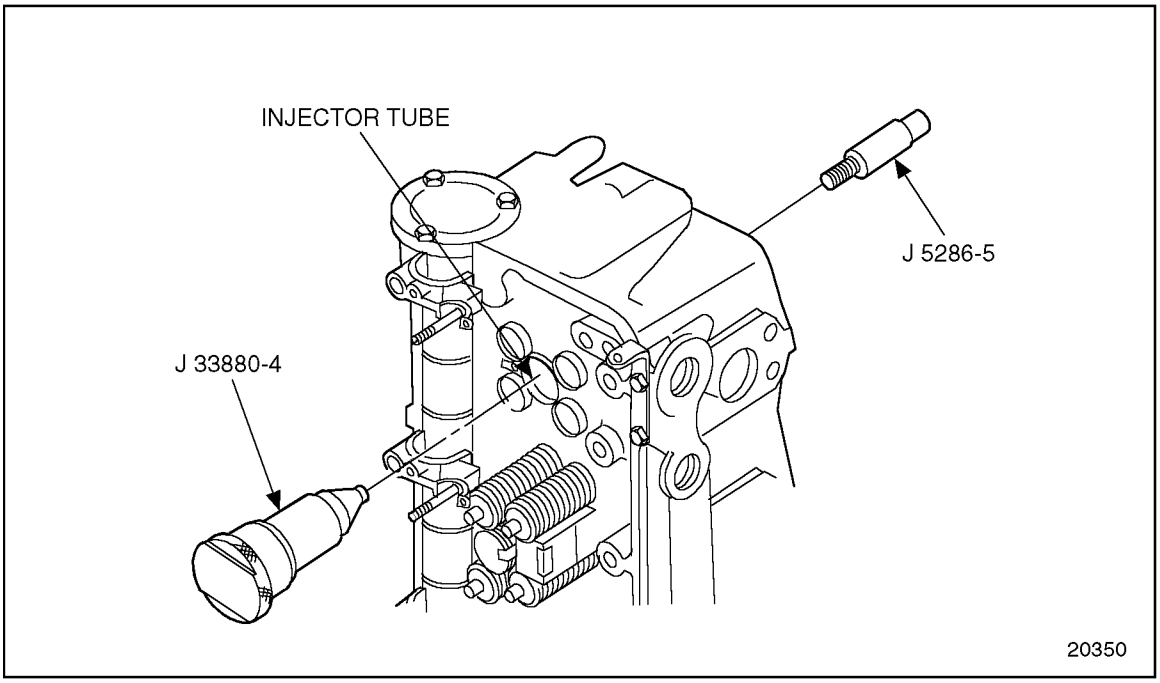

Figure 2-14 Removal of Injector Tube

3. Tap on the end of the pilot using a brass hammer or fiber mallet. Carefully drive and lift the injector tube, J 33880-4 and J 5286-5 from the cylinder head. If the injector tube O-ring is not removed with the injector tube, remove the O-ring from the cylinder head casting at the upper end of the injector tube bore. Discard O-ring.

 Copyright © 2004 DETROIT DIESEL CORPORATION

2.4.3 Injector Tube Crevice Volume Removal Tool

Detroit Diesel has made a machining improvement on the Series 60 cylinder head injector tube bore. This machining improvement removes cast iron material from the head at the crevice area, located just above the injector tube to cylinder head sealing land. See Figure 2-15

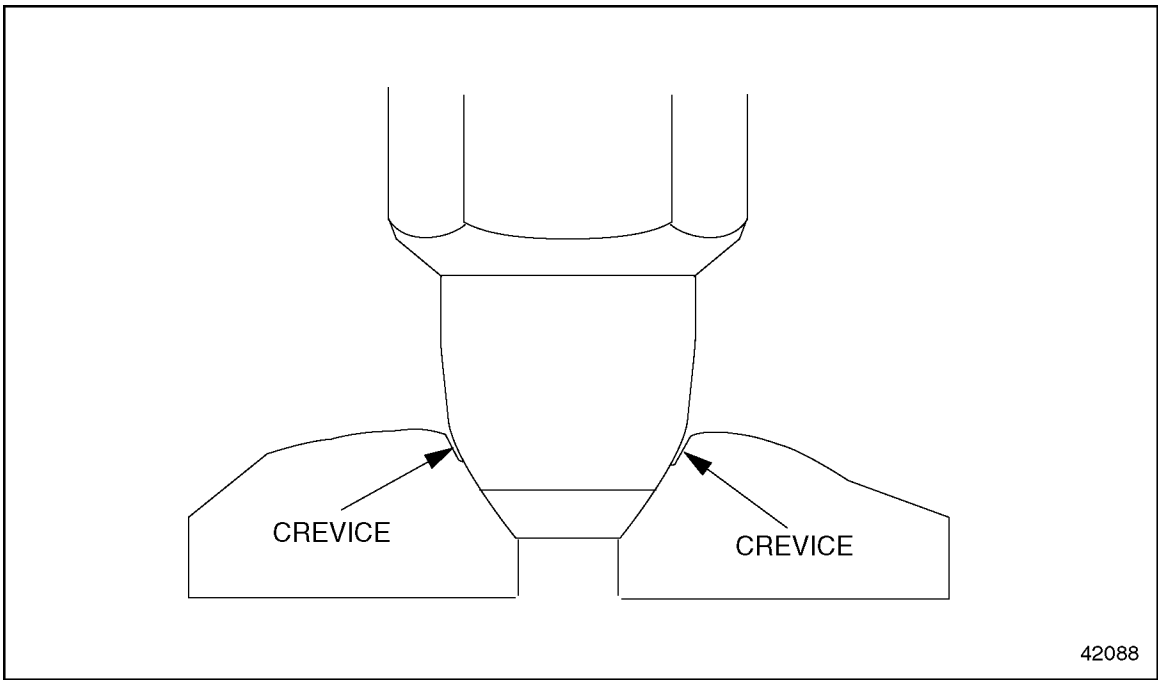

Figure 2-15 Crevice Area

(Rev. 2004) *All information subject to change without notice.*
6SE483 0401 Copyright © 2004 DETROIT DIESEL CORPORATION

This process was implemented on new engines beginning with engine serial number 06R0656739. A crevice volume removal service tool J 45723 is now available to perform this machining process to engines built before engine serial number 06R656739. This tool includes two replacement bits. Additional bits J 45723–1 are also available. See Figure 2-16.

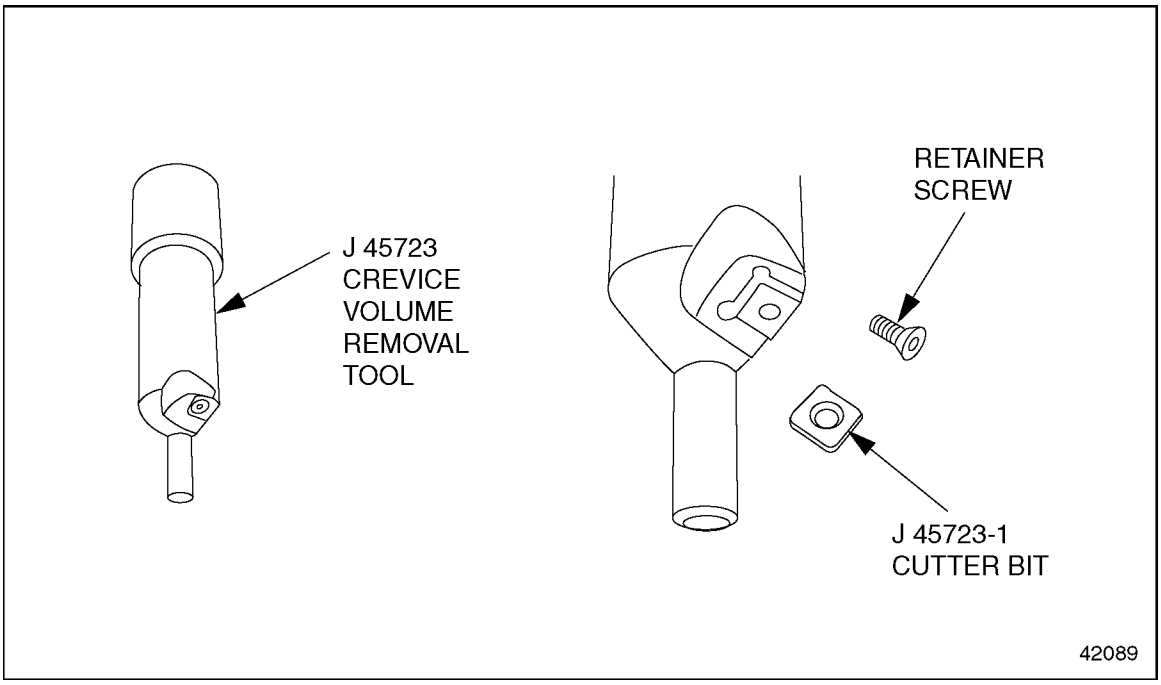

Figure 2-16 Crevice Volume Removal Tool J 45723

 Copyright © 2004 DETROIT DIESEL CORPORATION

This procedure is required whenever the injector tubes are removed and only on engines built before engine serial number 06R0656739.

1. Apply cutting oil to cutting bit.
2. Ensure injector tubes and O-rings are removed from injector bores.

NOTE:
Do not drop tool in bore, doing so would cause the cutting bit to chip.

3. Gently guide Crevice Volume Removal Tool J 45723 in injector tube bore taking caution not to score injector O-ring sealing surfaces.

NOTE:
Do not rotate tool in the counterclockwise direction as damage to the cutting bit will occur.

4. Using a speed handle and socket, turn cutter approximately 10 clockwise rotations at one turn every two seconds using moderate downward force.
5. Remove tool and inspect bit after each cut. If bit is chipped remove allan bolt and rotate bit 90 degrees. Replacement bits J 45723–1 are available.
6. Thoroughly flush metal shavings from injector tube bores.

2.4.4 Cleaning of Injector Tube

Thoroughly clean the injector tube hole in the cylinder head to remove any dirt, burrs, or foreign material that may prevent the new tube from seating at the lower end or sealing at the upper end. Excess material in the form of a small copper ring may be left at the lower end of the injector tube counterbore after the injector tube has been removed. This copper ring will have to be removed using a suitable sharp-pointed tool.

2.4.5 Installation of Auxiliary Injector Seal

Perform the following for installation of auxiliary injector seal.

(Rev. 2004) *All information subject to change without notice.*
6SE483 0401 Copyright © 2004 DETROIT DIESEL CORPORATION

NOTICE:
If a cylinder head has a damaged injector hole tube seal, coolant may seep past the seal after injector removal. Drain down the injector tube hole, and fill the combustion chamber. If this condition goes undiscovered and the coolant is not removed from the cylinder before the injector is replaced, the engine may be damaged at startup. Always check cylinders for possible coolant seepage before replacing injectors and use care to prevent coolant or fuel from contaminating the engine lubricating oil.

NOTICE:
Do not use a metal dowel to install the auxiliary injector seal, as this may damage the seal.

1. Place the auxiliary seal in the injector hole.
2. Seat it against the top of the injector tube with a 1-5/8 in. diameter wood or plastic dowel. See Figure 2-17.

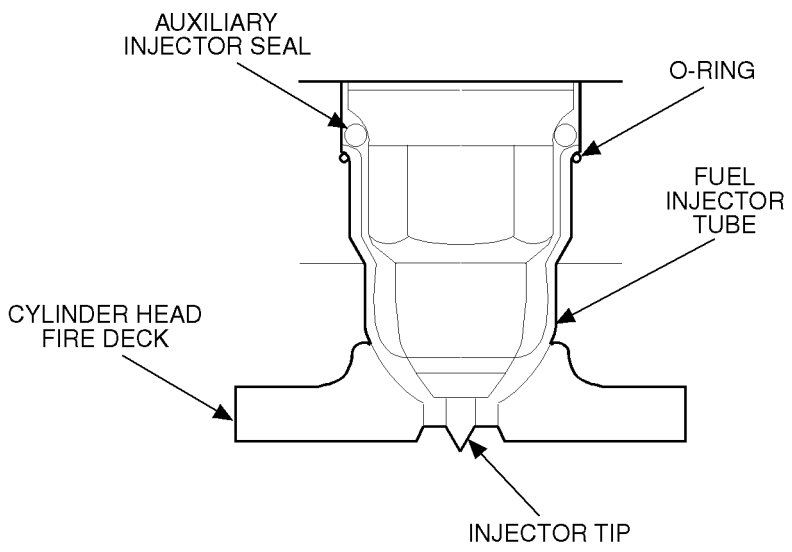

Figure 2-17 Auxiliary Injector Seal Location

 Copyright © 2004 DETROIT DIESEL CORPORATION

2.4.6 Installation of Injector Tube and O-ring

Perform the following steps for injector tube installation:

NOTICE:
DO NOT lubricate the outside of the injector tube or inside the cylinder head injector tube bore to facilitate installation of the tube. Lubricant may cause the tube to turn during reaming or flaring operations possibly damaging the injector tube or reamers.

NOTE:
This ring was formerly made of fluoroelastomer and had a blue coating for identification. It is now made of a special blended fluorocarbon material with a green teflon coating for identification. Former and current-design seal rings are completely interchangeable, and only the current green-coated seal ring will be serviced.

1. Place the O-ring over the injector tube, sliding it up to the lip. See Figure 2-18.
2. Install the injector tube on J 33880-4. See Figure 2-18.

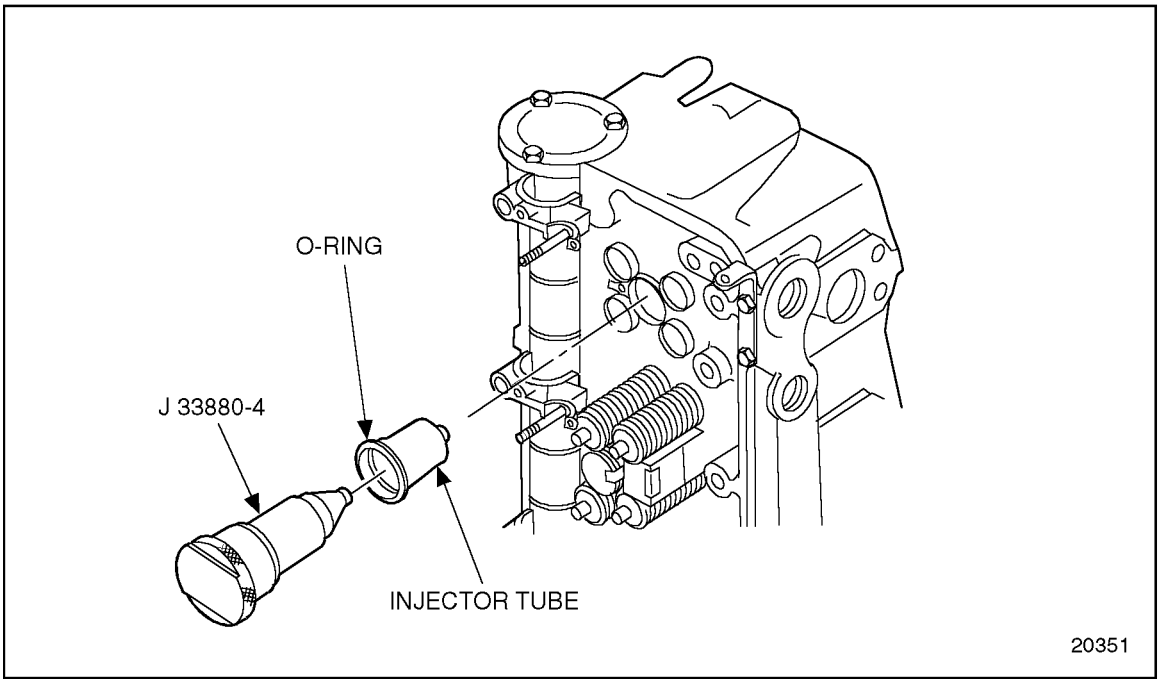

Figure 2-18 Installing O-ring and Injector Tube

3. Install both J 33880-4 and injector tube into the injector bore. Ensure the tip of the injector tube goes through the small hole in the fire deck. Tap lightly on the end of the tool, if necessary, to seat the tube.

(Rev. 2004) *All information subject to change without notice.*
6SE483 0401 Copyright © 2004 DETROIT DIESEL CORPORATION

4. Install the EUI hold-down clamp and bolt it in place over J 33880-4. See Figure 2-19.

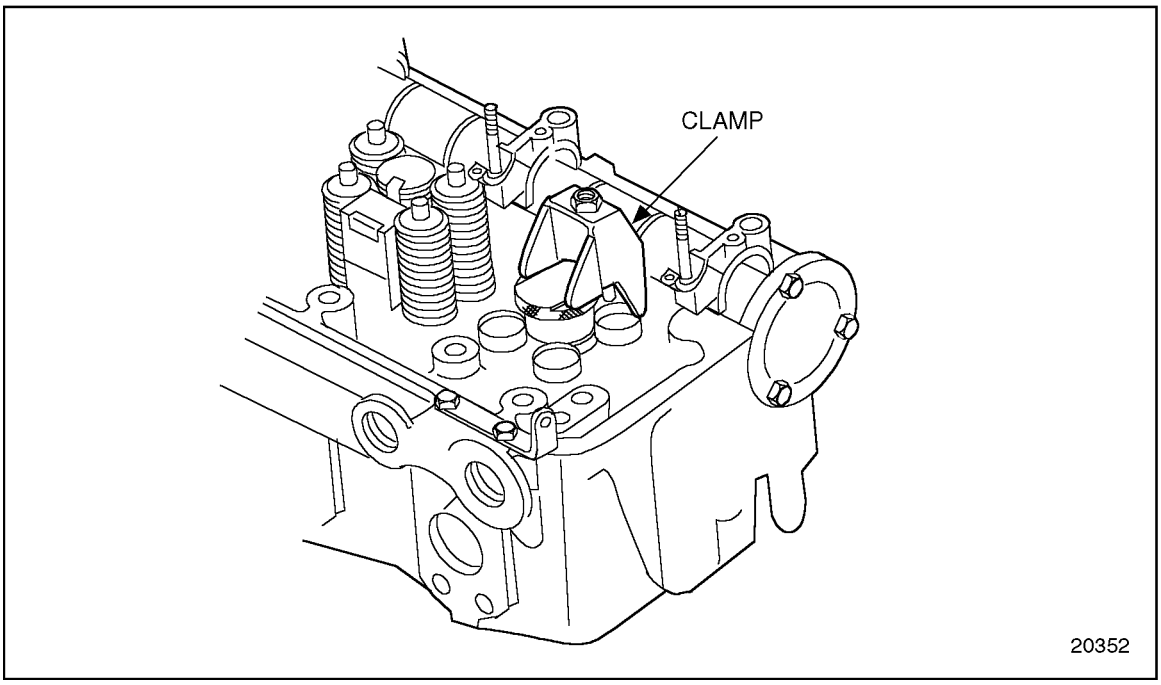

Figure 2-19 Installing Injector Hold-down Clamp

5. Torque the EUI hold-down clamp bolt 58-66 N·m (43-49 lb·ft). This will seat the injector tube at the desired depth.After an injector tube has been installed in a cylinder head, it must be finished.

   Perform the following steps for a flaring injector tube:

6. Insert J 5286-6, through the small hole in the bottom of the tube, rotating to engage the threads in the installation/removal tool.

 Copyright © 2004 DETROIT DIESEL CORPORATION

7. Using a torque wrench and 12-point, 29/32 in. socket, screw J 5286-6 into J 33880-4 until it begins to flare the tube. See Figure 2-20.

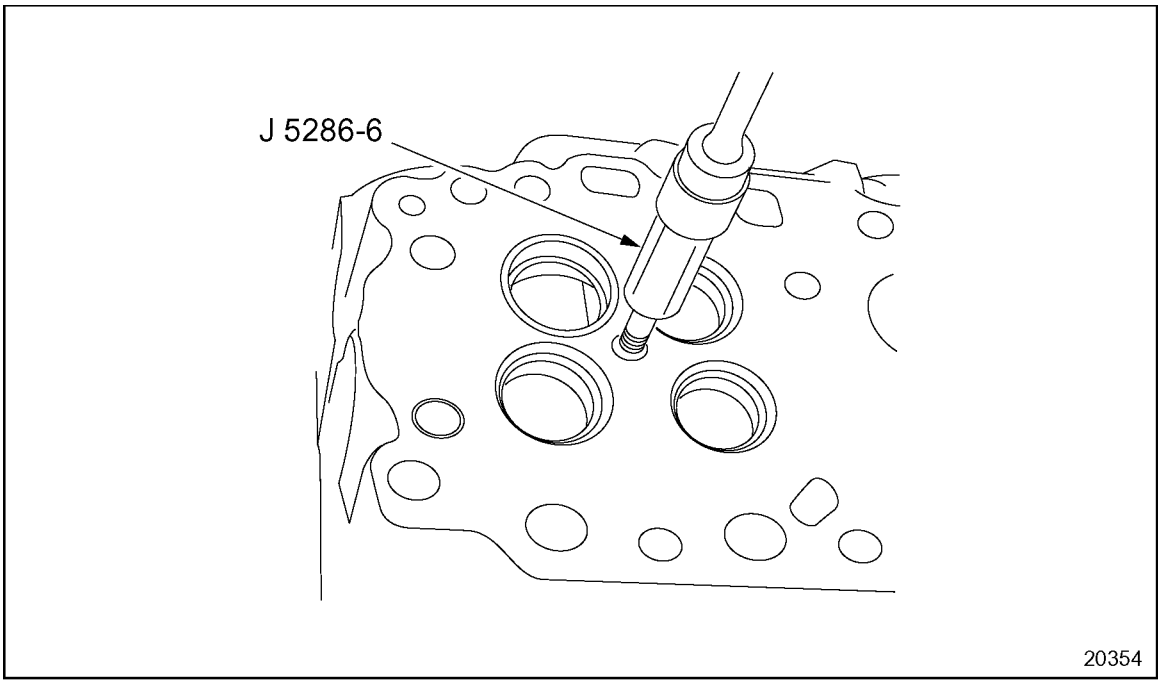

Figure 2-20 Flaring Injector Tube Tip

(Rev. 2004) *All information subject to change without notice.*
6SE483 0401 Copyright © 2004 DETROIT DIESEL CORPORATION

8. Continue to rotate J 5286-6 and apply pressure to the flare end of the tube firmly against the cylinder head casting tube opening. Do not exceed 41 N·m (30 lb·ft) torque. See Figure 2-21.

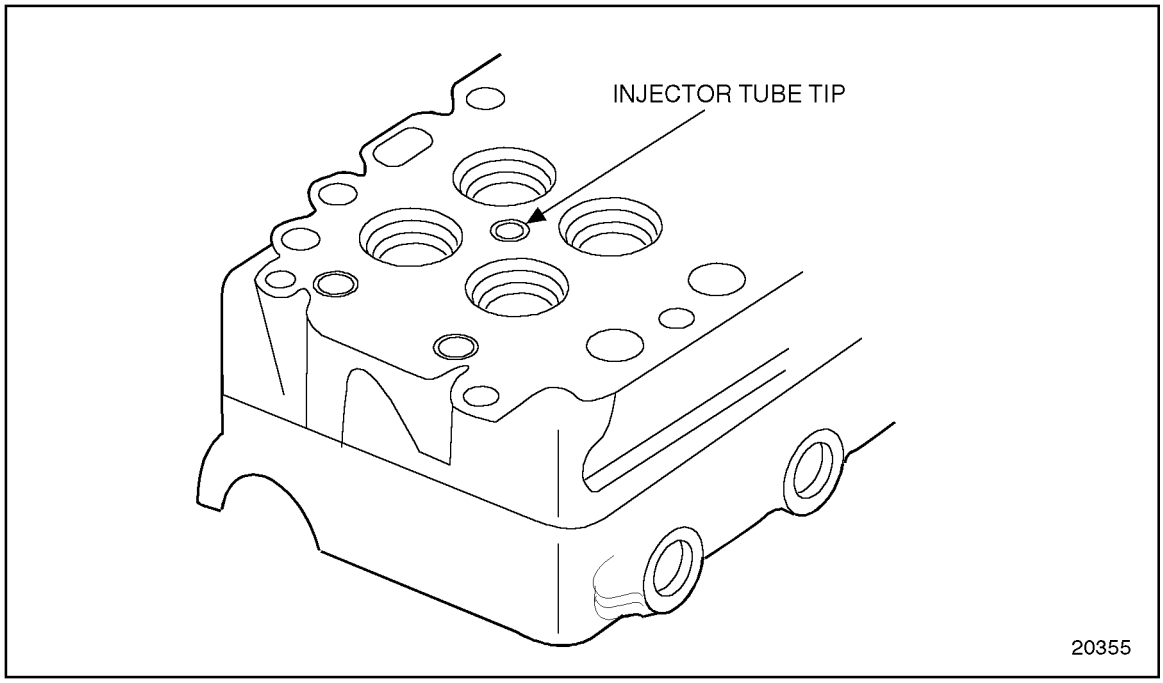

Figure 2-21 Properly Flared Injector Tube Tip

9. Remove the J 5286-6and J 33880.The tapered lower end of the injector tube must provide a smooth and true seat for the lower end of the injector nut to effectively seal the cylinder pressures and properly position the injector tip into the combustion chamber. To ream the injector tube, complete the following steps:
10. Install J 33880-3, into the injector bore until it contacts the cylinder head. See Figure 2-22.
11. Install J 33880-10, into the seat reamer pilot until it bottoms. See Figure 2-22.

 Copyright © 2004 DETROIT DIESEL CORPORATION

NOTICE:

Turn the reamer in a clockwise direction only (both when inserting and withdrawing the reamer) because movement in the opposite direction will dull the cutting edges of the flutes.

12. Place a few drops of cutting oil on the cutting edges of J 33880-5, and install it in J 33880-10. See Figure 2-22.

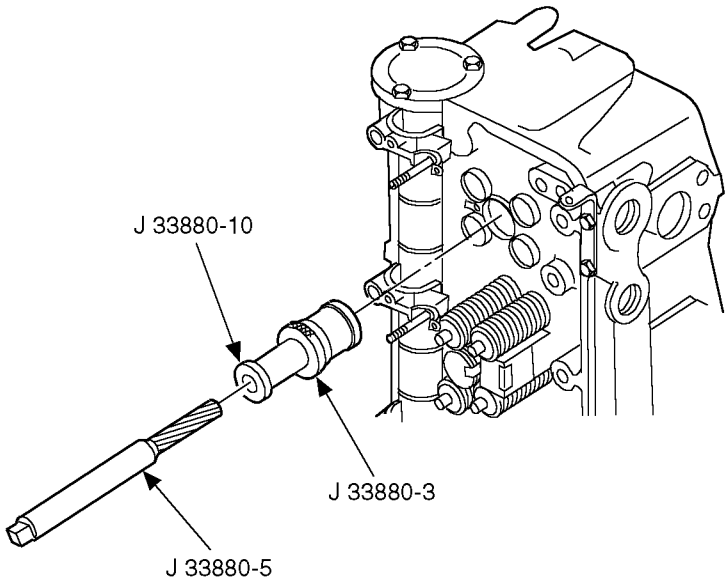

Figure 2-22 Reaming Injector Tube

13. Using a speed handle with 7/16 in. socket attached, turn the tip reamer in a clockwise direction using light pressure until it goes completely through the end of the injector tube.

CAUTION:

To avoid injury from flying debris when using compressed air, wear adequate eye protection (face shield or safety goggles) and do not exceed 40 psi (276 kPa) air pressure.

14. Remove J 33880-5 and J 33880-10. Blow out the injector tube and tip with compressed air to remove all metal shavings.

(Rev. 2004) *All information subject to change without notice.*
6SE483 0401 Copyright © 2004 DETROIT DIESEL CORPORATION

15. Install J 33880-20, to the firedeck of the cylinder head using two existing head bolts. Tighten the head bolts, but do not torque. Position the cut out portion of the stop block beneath the injector tube. See Figure 2-23.

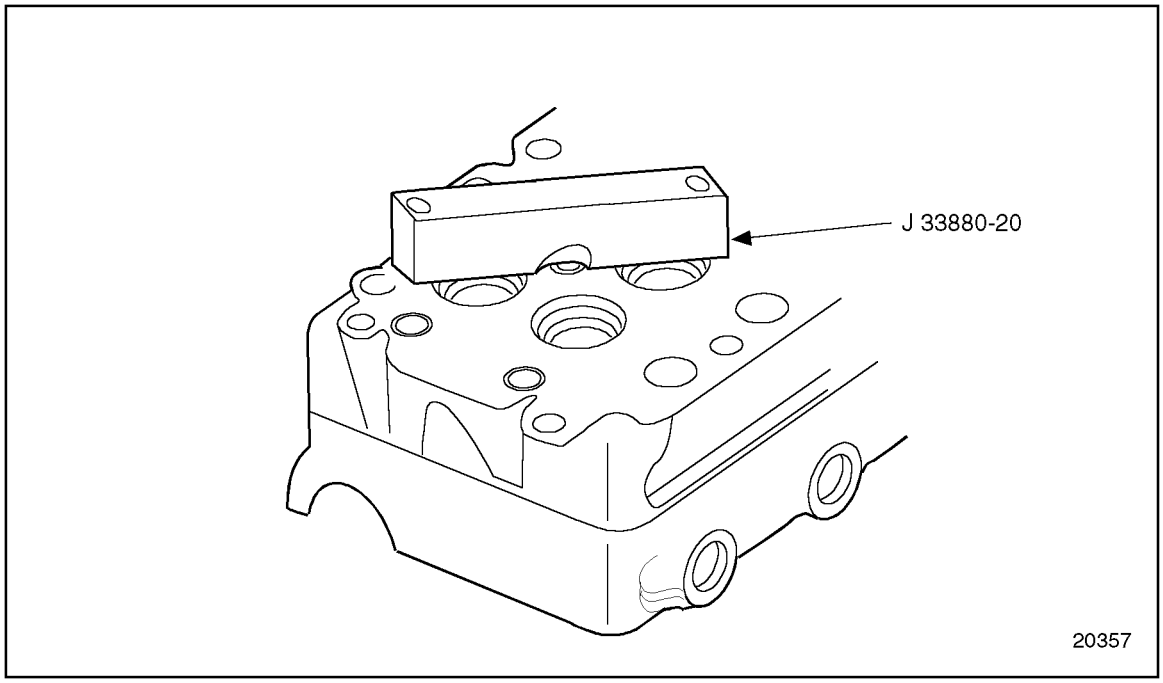

Figure 2-23 Stop Block Installation

16. Install J 33880-3, into the injector tube bore until it contacts the cylinder head. See Figure 2-24.

 Copyright © 2004 DETROIT DIESEL CORPORATION

NOTICE:
If the seat reamer is dropped into the pilot, or is allowed to strike the injector, chatter marks may result in the injector tube seat. Use extreme care when inserting the seat reamer to prevent damaging the tube.

17. Place a few drops of cutting oil on the edges of J 33880-1, and gently place it in the pilot. See Figure 2-24.

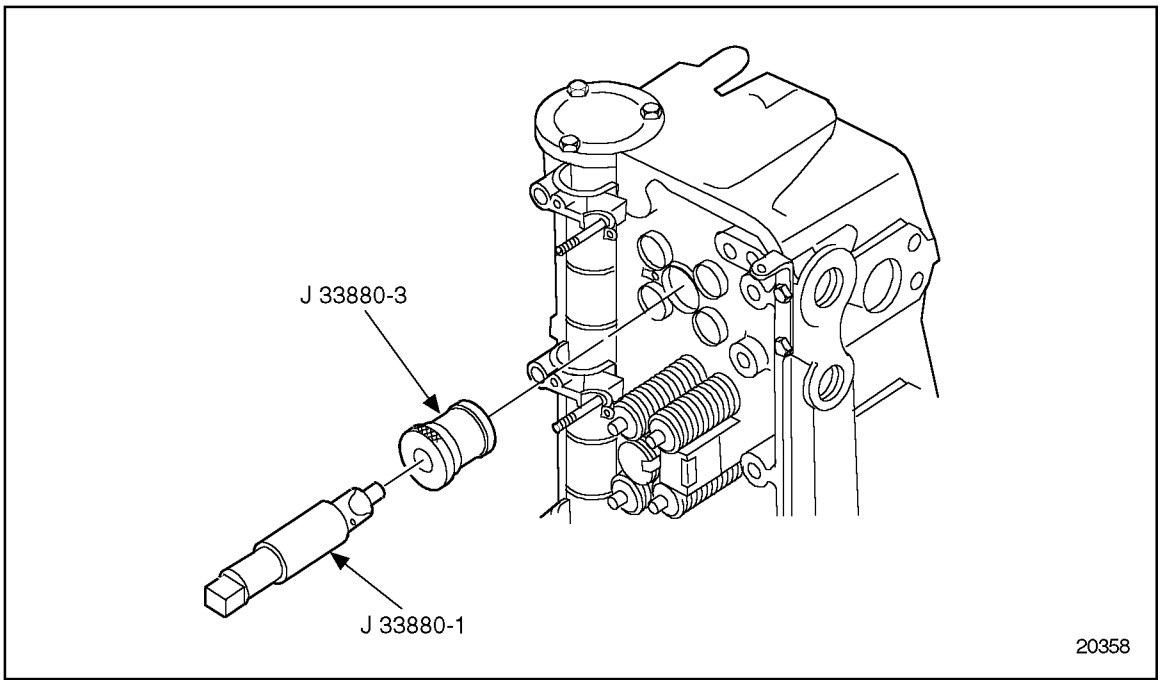

Figure 2-24 Reaming Injector Tube Seat

NOTICE:
Turn the reamer in a clockwise direction only, because movement in the opposite direction will dull the cutting edges of the flutes.

18. Using a speed handle with 15/16 in. socket attached, turn the seat reamer in a clockwise direction with light pressure. Continue until J 33880-1 part of J 33880 bottoms against J 33880-20 part of J 33880.

(Rev. 2004) *All information subject to change without notice.*
6SE483 0401 Copyright © 2004 DETROIT DIESEL CORPORATION

19. Inspect the tube seating surface to ensure that there are no irregularities or chatter marks in the seating surface. If irregularities or chatter marks are found, remove and replace the injector tube. See Figure 2-25.

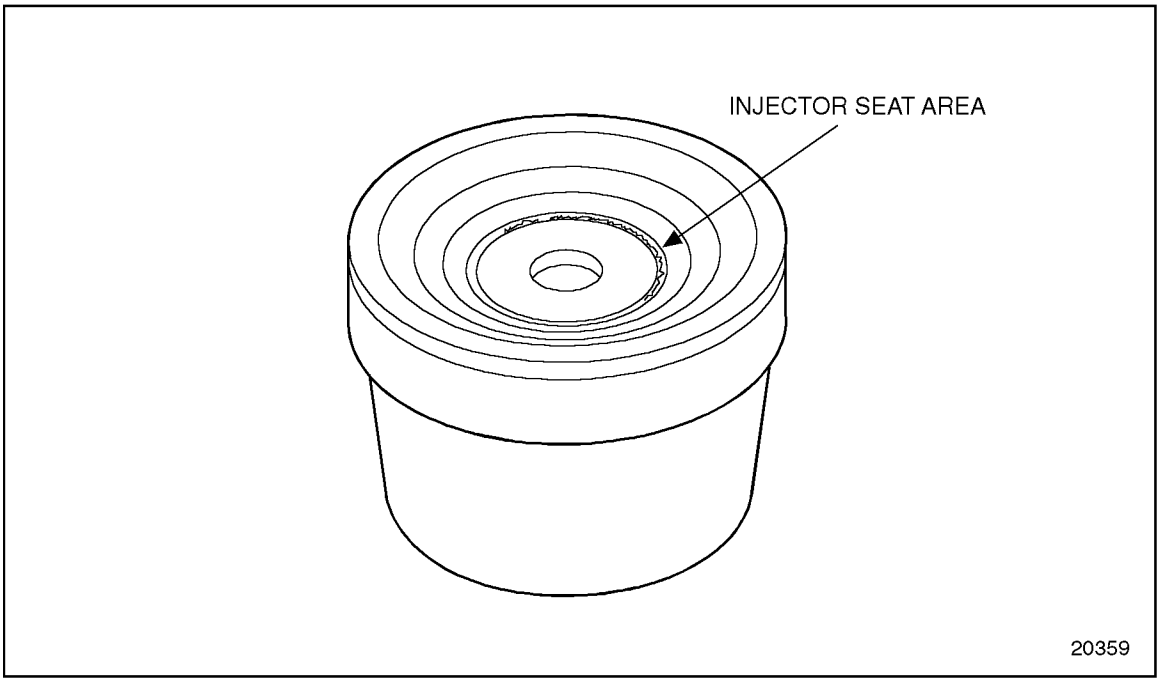

Figure 2-25 Injector Tube Seat Irregularities

CAUTION:

To avoid injury from flying debris when using compressed air, wear adequate eye protection (face shield or safety goggles) and do not exceed 40 psi (276 kPa) air pressure.

20. Remove the reamer and pilot. Clean out the injector tube with compressed air.
21. Remove the two head bolts and J 33880-20 from the cylinder head.

 Copyright © 2004 DETROIT DIESEL CORPORATION

22. Spot-face the injector tube as follows:

[a] With the cylinder head firedeck in a workable position, insert the tube tip refinisher tool, J 5286-8, into the injector tube. See Figure 2-26.

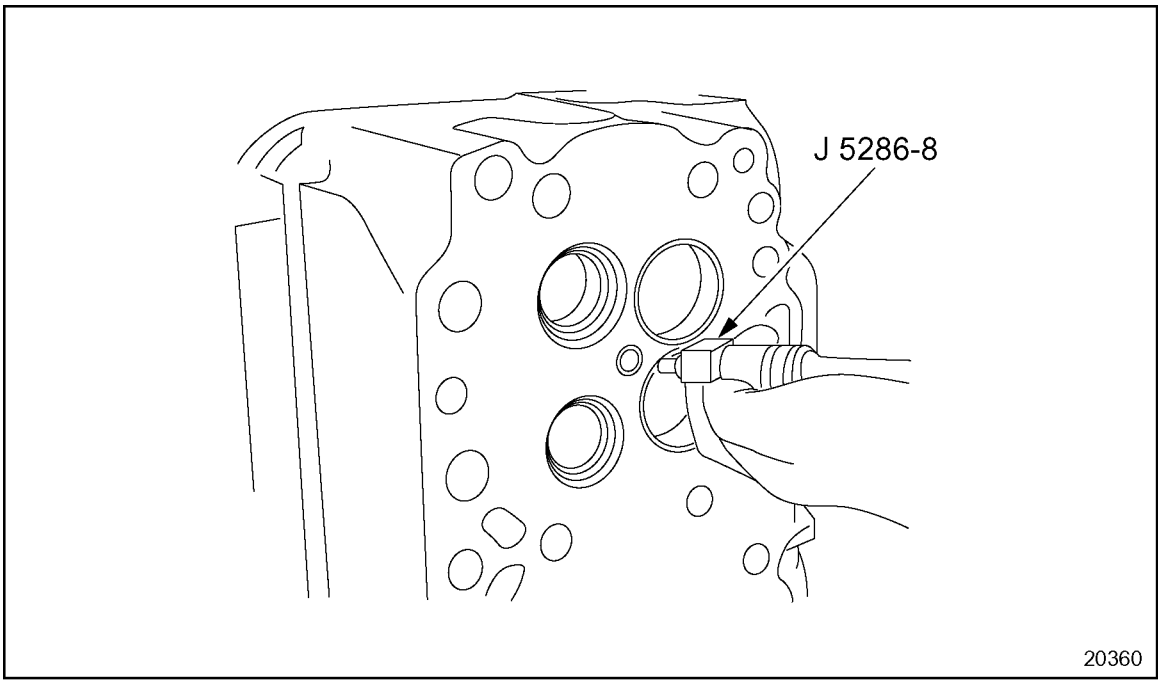

Figure 2-26 Refinishing Injector Tube Recess

[b] Using a 12-point socket and speed handle, turn the refinisher to remove excess stock so that the lower end of the injector tube is from flush to -0.20 mm (-0.008 in.) below the firedeck surface of the cylinder head.

CAUTION:

To avoid injury from flying debris when using compressed air, wear adequate eye protection (face shield or safety goggles) and do not exceed 40 psi (276 kPa) air pressure.

[c] Remove the chips from the injector tube with compressed air. See Figure 2-26.

(Rev. 2004) *All information subject to change without notice.*
6SE483 0401 Copyright © 2004 DETROIT DIESEL CORPORATION

2.4.6.1 Check Injector Tip Protrusion

To check the injector tip protrusion:

1. Insert J 33880-3 part of J 33880, into injector tube bore of cylinder head. See Figure 2-22.
2. Insert J 33880-7 part of J 33880, into pilot. See Figure 2-27.

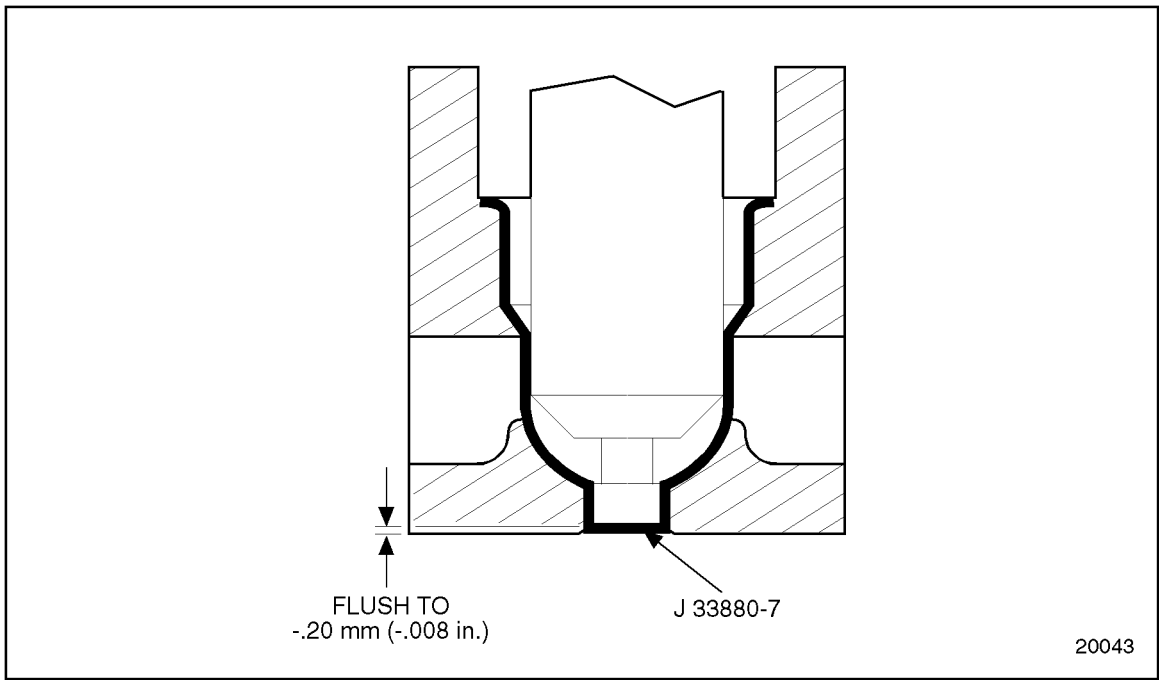

Figure 2-27 Checking Injector Tip Protrusion

3. Check injector tip protrusion using J 22273-01. Hold protrusion gage against pilot while measuring tip protrusion. This measurement should be flush to -0.20 mm (-0.008 in.).

 Copyright © 2004 DETROIT DIESEL CORPORATION

2.5 N3 ELECTRONIC UNIT INJECTOR

Engine models built after December 1, 2003 will use the N3 Electronic Unit Injector (EUI). See Figure 2-28. The N3 injector is designed as an inline concept. The fuel metering unit or module is positioned under the plunger, so the overall envelope of the N3 is smaller than previous injectors. The N3 has an inwardly opening of solenoid valve which controls beginning of injection and end of injection. The solenoid valve closing point defines the beginning of injection (BOI) and the solenoid valve opening point defines the end of injection (EOI). Pressure is generated by the downward movement of the plunger in combination with the closed solenoid valve. Fuel quantity is metered by the length of time the solenoid valve remains closed. A magnetic core is incorporated into the module. The electrical leads from the core are brought to an external position on the injector through a modular two-pin connector socket.

The advantages of the N3 injector are:

- ☐ Improved strength.
- ☐ Reduced external leakage potential.
- ☐ Compact design.
- ☐ Reduced weight.

The amount of fuel injected and the beginning of injection timing is determined by the ECU. The ECU sends a command pulse which activites the injector solenoid. The N3 EUI performs four functions:

- ☐ Creates the high-fuel pressure required for efficient injection.
- ☐ Meters and injects the exact amount of fuel to handle the load.
- ☐ Atomizes the fuel for mixing with the air in the combustion chamber.
- ☐ Permits continous fuel flow for component cooling.

(Rev. 2004) *All information subject to change without notice.*
6SE483 0401 Copyright © 2004 DETROIT DIESEL CORPORATION

Engine combustion is obtained by injecting, under pressure, a small quantity of accurately metered and finely atomized fuel oil into the cylinder. Metering and timing of the fuel is accomplished by the ECU which actuates the solenoid control valve to stop the free flow of fuel through the injector. When the solenoid control valve closes, fuel is trapped in the injector body and under the plunger. The continuous fuel flow through the injector prevents air pockets in the fuel system and cools those injector parts subjected to high combustion temperatures.

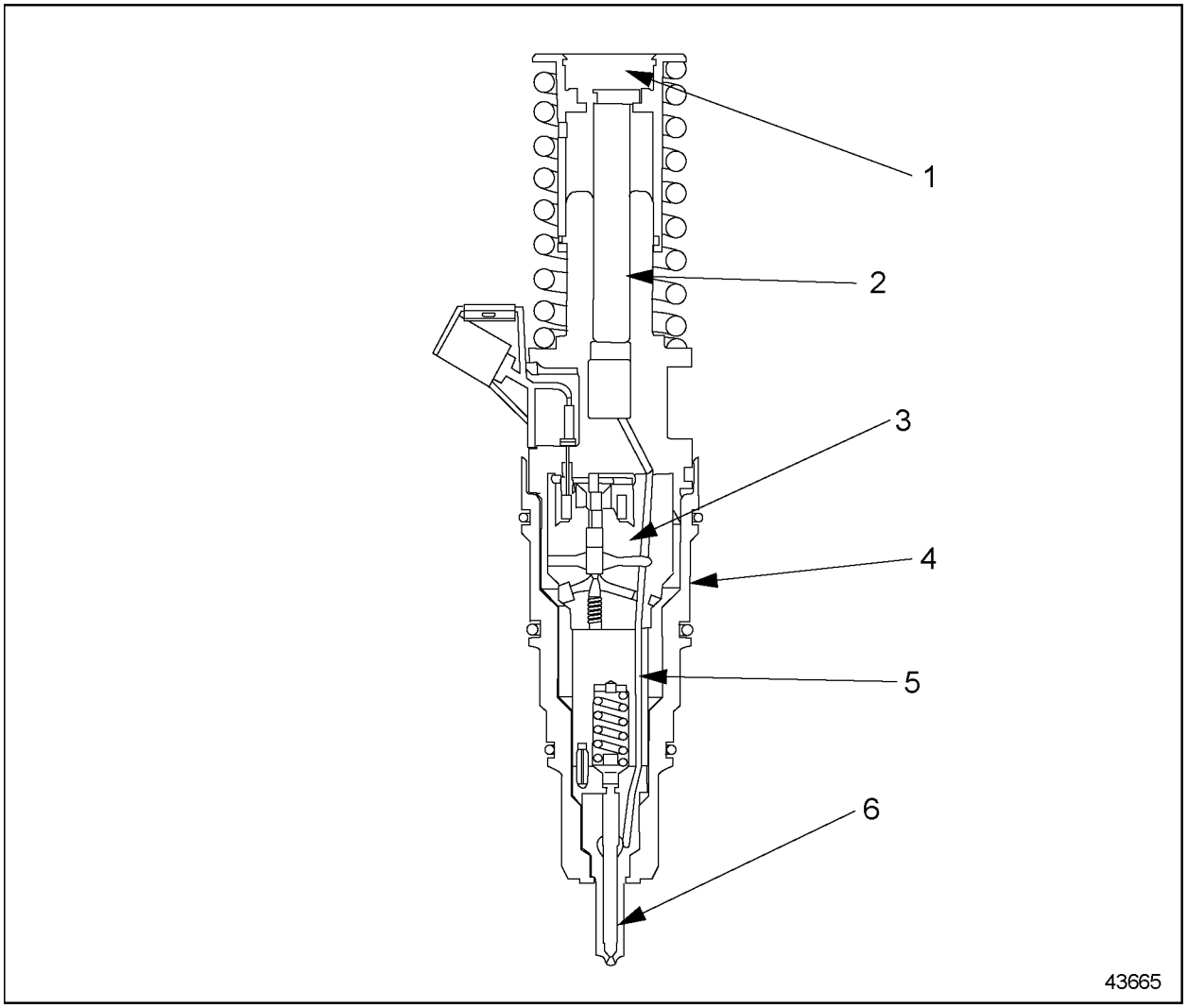

1. Injector Follower
2. Plunger
3. Module
4. Injector Nut
5. Injector Spring Cage
6. Nozzle

Figure 2-28 N3 Electronic Unit Injector Cross-Section

 Copyright © 2004 DETROIT DIESEL CORPORATION

Fuel enters the injector through the fuel inlet opening located around the injector body. See Figure 2-29.

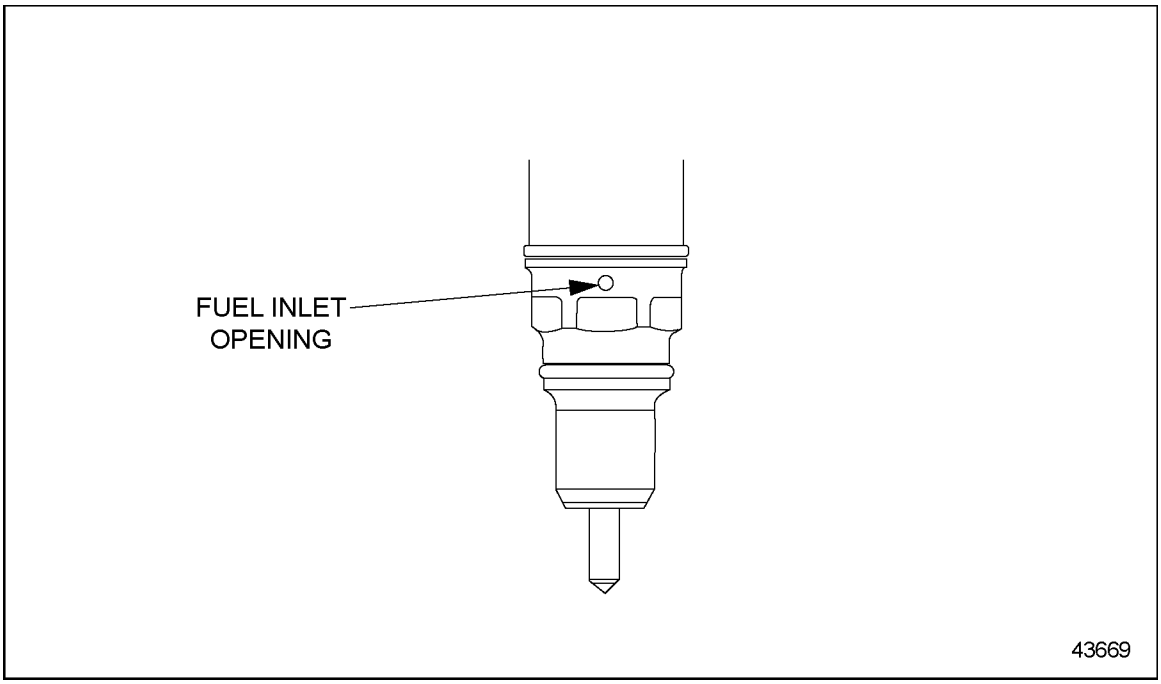

Figure 2-29 Fuel Injector Body

(Rev. 2004) *All information subject to change without notice.*
6SE483 0401 Copyright © 2004 DETROIT DIESEL CORPORATION

Outlet openings through which the excess fuel oil returns to the fuel return manifold and then back to the fuel tank, are located around the injector nut. See Figure 2-30.

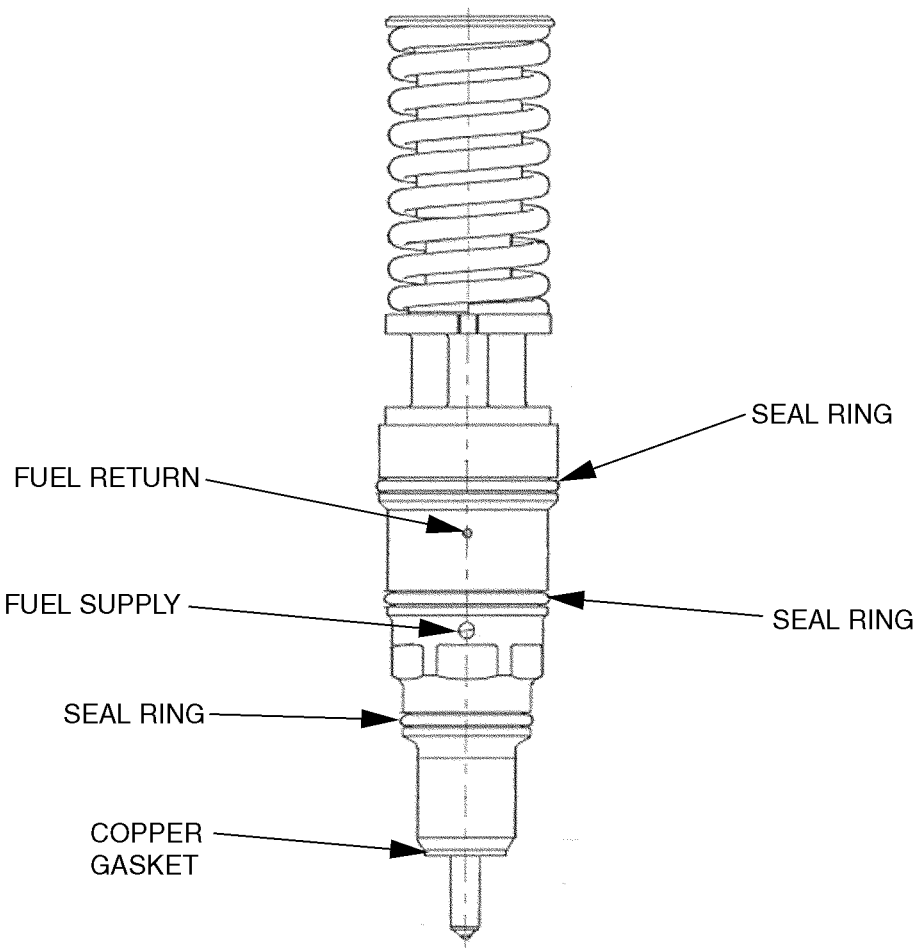

Figure 2-30 N3 Electronic Unit Injector

 Copyright © 2004 DETROIT DIESEL CORPORATION

After entering the nut cavity, the fuel passes through a drilled passage into the module and plunger area. See Figure 2-28.

The plunger operates up and down in the body bore of the injector. The motion of the injector rocker arm is transmitted to the plunger and follower that bears against the follower spring.

As the piston moves approximately two-thirds of the way up in the cylinder on the compression stroke, the injector cam lobe begins to lift causing the injector rocker arm to push down on the follower and the plunger. Just before injection begins, the ECU sends an electronic pulse which turns on the injector solenoid. The energized solenoid creates a magnetic force which closes the control valve and traps fuel under the plunger and passages leading down to the needle valve. The fuel pressure increases as the plunger continues its downward stroke.

This fuel pressure acts on the needle valve. When it creates a force high enough to overcome the valve spring force holding the needle on its seat, the needle valve moves up, allowing the high pressure fuel to spray into the combustion chamber. The high pressure of the fuel passing through the small holes in the nozzle creates a finely atomized spray for combustion within the cylinder.

After the pulse width time has passed, the ECU turns off the current to the injector solenoid. The de-energized solenoid allows a spring to open the control valve, permitting the trapped fuel to spill down, dropping the pressure within the injector. When the pressure is low enough the needle valve closes and ends injection

The beginning of injection and metering of the fuel in relation to the crankshaft position are controlled by the ECU. Injection begins soon after the control valve is closed. The valve closing point known as the injector response time is returned to the ECU. This information is used to monitor and adjust injection timing, thus removing injector-to-injector variation influences on timing. The amount of fuel injected depends on the pulse width stored in the calibration which determines how long the control valve remains closed; the larger the pulse width the longer the valve is closed and the more fuel is injected.

When the injector rocker arm has completed its downward travel the injector follower spring returns it to the starting position. As the plunger moves up fuel enters the injector pumping cavity for another injection cycle. The constant circulation of fuel through the injector renews the fuel supply in the chamber and aids the cooling of the injector.

(Rev. 2004) *All information subject to change without notice.*
6SE483 0401 Copyright © 2004 DETROIT DIESEL CORPORATION

2.5.1 Replacement of N3 Electronic Unit Injector

To determine if replacement is necessary perform the following procedure. See Figure 2-31.

NOTICE
If the solenoid on N3 Electronic Unit Injector is faulty the injector must be replaced. The solenoid is not repairable.

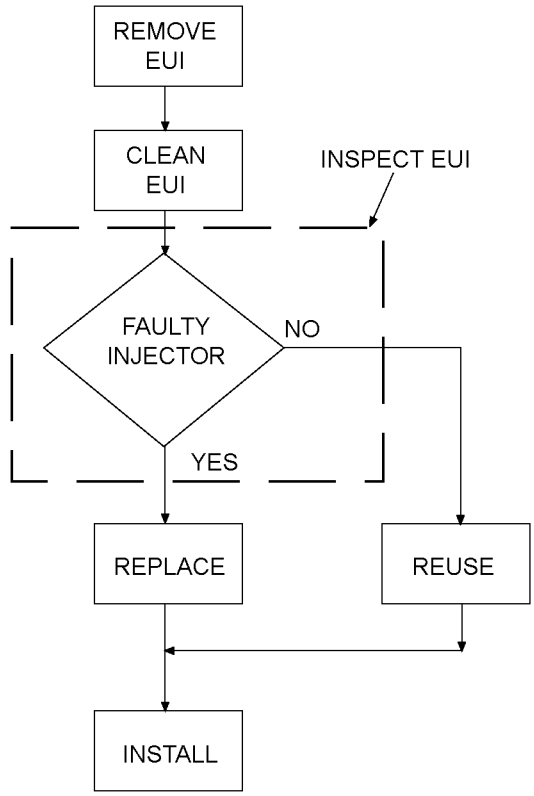

Figure 2-31 Flowchart for Replacement of N3 Electronic Unit Injector

2.5.2 Removal of N3 Elecronic Unit Injector

The following steps must be performed prior to removing an injector:

1. Clean the valve rocker cover around its seat on the head, and in the attaching bolt recesses.
   [a] To remove the *one-piece* rocker cover, refer to section 1.6.2.

 Copyright © 2004 DETROIT DIESEL CORPORATION

[b] To remove the *two-piece*rocker cover, refer to section 1.6.3.

[c] To remove the *three-piece* rocker cover, refer to section 1.6.5.

CAUTION:

To avoid injury from flying debris when using compressed air, wear adequate eye protection (face shield or safety goggles) and do not exceed 40 psi (276 kPa) air pressure.

NOTICE:

All the fuel must be removed from the cylinder head before removing an injector to prevent the fuel from entering the cylinder and causing hydrostatic lock or washdown. If the head is not thoroughly purged of fuel before an injector is removed, fuel remaining in the fuel manifold will drain into the cylinder filling the piston dome recess. It cannot drain from the dome and, if not removed, can cause hydrostatic lock and bend the connecting rod.

NOTICE:

Do not exceed 40 psi (276 kPa) when blowing compressed air into the cylinder head inlet fitting.

2. Drain the cylinder head fuel gallery by removing the inlet and outlet lines from the fittings at the rear of the cylinder head. Blow low pressure compressed air into the inlet fitting for 20 to 30 seconds or until all of the fuel is purged from the cylinder head. See Figure 2-32.

NOTE:
Loosening the fuel line at the inlet fitting will allow fuel to flow faster. Carefully collect the drained fuel in an appropriate container.

(Rev. 2004) *All information subject to change without notice.*
6SE483 0401 Copyright © 2004 DETROIT DIESEL CORPORATION

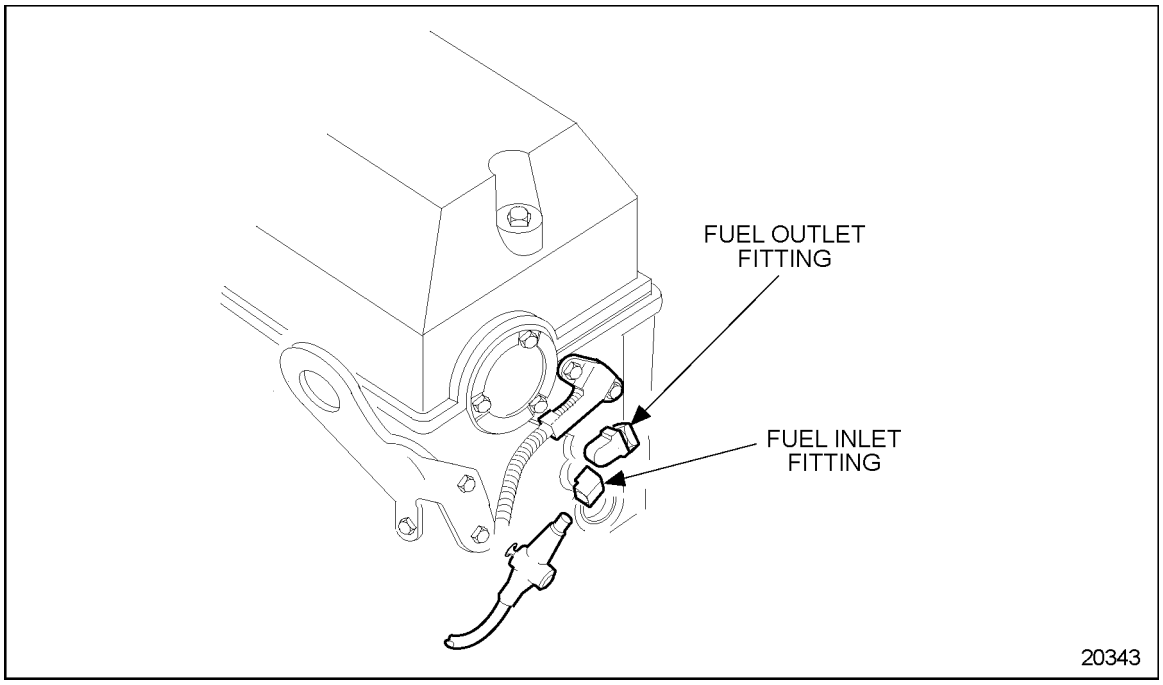

Figure 2-32 Cylinder Head Fuel Fitting Locations

3. Remove the two rocker shaft through-bolts and one nut for each rocker shaft assembly, and lift the rocker shaft assembly off the engine. Refer to section 1.3.2

Remove the N3 injector as follows:

NOTE:
Do not pry on injector connector at anytime.

1. Disengage the locking tang on the harness plug connector. Grasp the connector and gently pull it from the socket.
2. Remove injector hold down bolt and washer.

 Copyright © 2004 DETROIT DIESEL CORPORATION

NOTICE:
Extreme care should be used when handling an N3 EUI to avoid costly damage by dropping or otherwise mishandling the N3 EUI.

NOTICE
The N3 EUI must be removed from the cylinder head by applying force on the body surface as shown in Figure 2-33. Removal force must not be applied to any other area on the N3 injector.

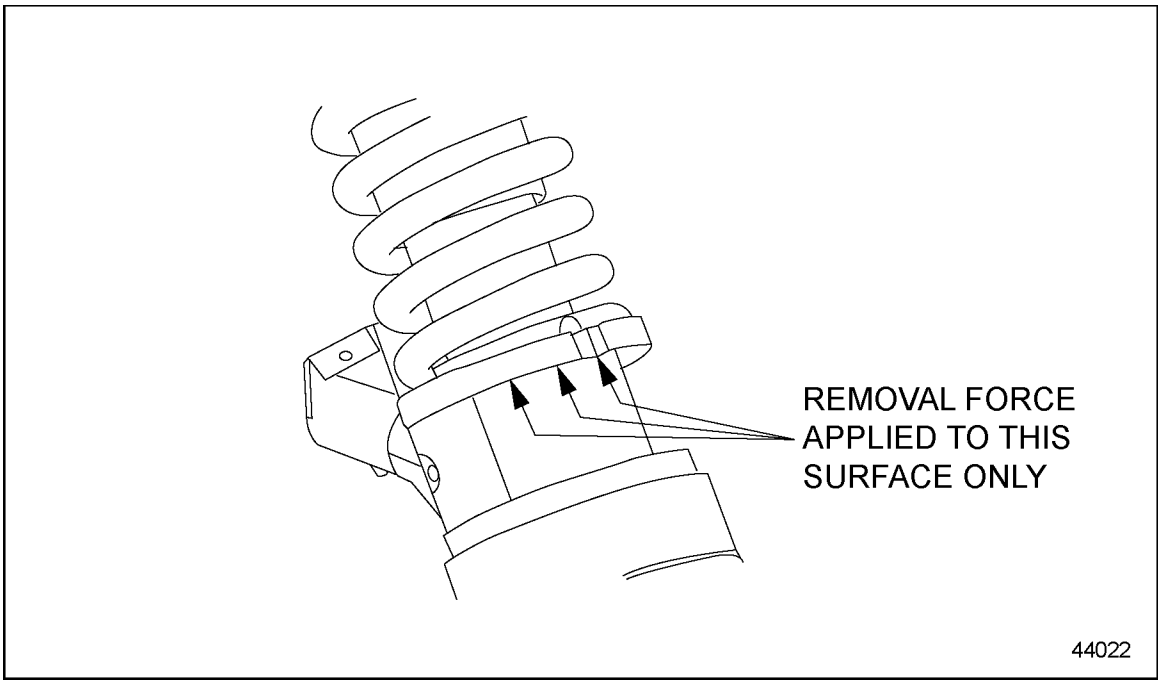

Figure 2-33 N3 Injector Removal Surface

(Rev. 2004) *All information subject to change without notice.*
6SE483 0401 Copyright © 2004 DETROIT DIESEL CORPORATION

3. Lift the injector from its seat in the cylinder head by inserting a pry bar under the hold down clamp and remove as a assembly both clamp and injector. See Figure 2-34 .

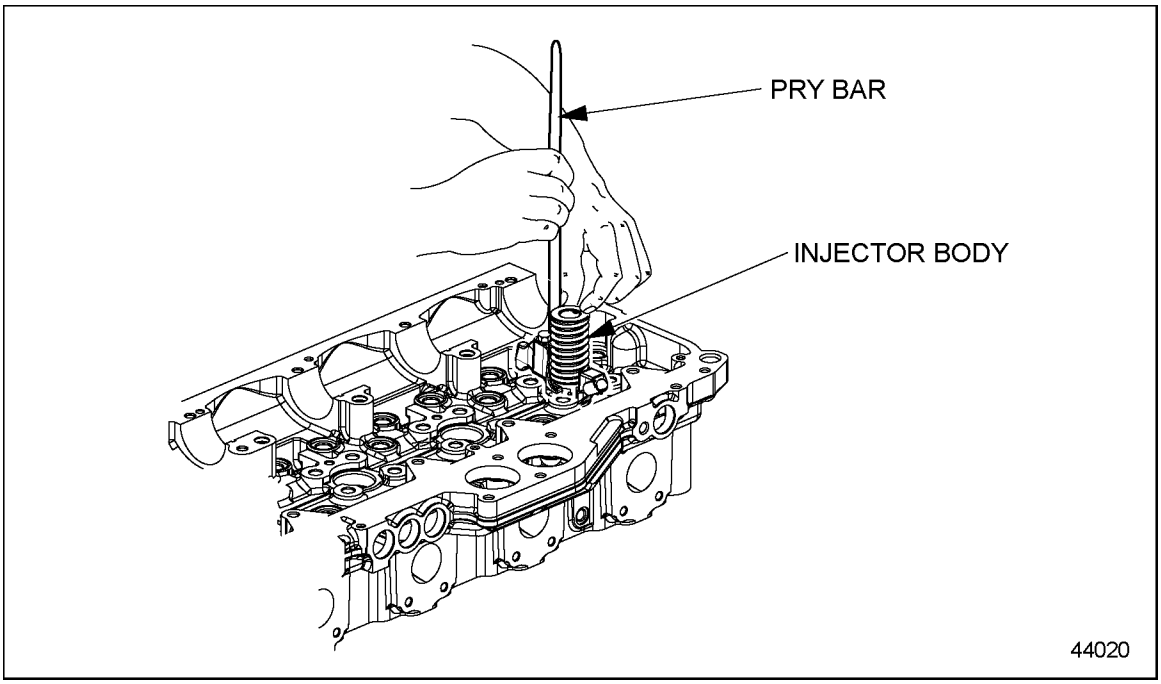

Figure 2-34 Removal of the N3 Injector

NOTICE:
Avoid wire brushing the spray holes to prevent damage.

4. Cover the injector hole in the cylinder head to keep out foreign material. Remove carbon from the injector exterior in the area where the tip joins the nut, using wire buffing wheel, J 7944.

2.5.3 Disassembly of N3 Electronic Unit Injector

On a Series 60 engine that uses the N3 EUI, only the injector seal rings and copper washer are servicable. The injector must not be disassembled.

2.5.4 Installation of the N3 Electronic Unit Injector

Perform the following steps:

1. If the fuel system is contaminated with coolant:
   - [a] Drain the fuel tanks and refill with clean fuel. Refer to section 13.13.2.
   - [b] Replace both filters with new, and clean the fuel/water separator, if equipped. Refer to section 2.8.2.
   - [c] Inspect fuel injectors for damage and replace as required.

 Copyright © 2004 DETROIT DIESEL CORPORATION

2. If the coolant sysem is contaminated with fuel, flush and reverse flush the system . Refer to section 13.13.4

CAUTION:

To avoid injury from flying debris when using compressed air, wear adequate eye protection (face shield or safety goggles) and do not exceed 40 psi (276 kPa) air pressure.

NOTICE:

Leftover fuel must be removed from the injector bore before injector installation. If fuel is trapped between the top of the injector hole tube and the lower injector O-ring seal, it may seep down to the injector hole tube seal ring, causing swelling and possable seal leakage.

3. Using clean compressed air, blow out any fuel remaining in the injector bore.

NOTICE:

Injector O-ring seals and copper seals are considered one-use items and cannot be reused. Any time an injector is removed, all three injector O-ring seals and copper seal must be replaced with new parts. Failure to replace O-ring seals and copper seal can result in leakage.

4. Check to make sure the injector bore is throughly clean.

NOTE:
The injector tube bore should be cleaned and inspected for damage before installation of the N3 Electronic Unit Injector. Refer to section 2.6.1.1.

5. Install new copper seal on injector, ensure contured side faces toward the injector.

NOTE:
All external O-rings must be lubricated prior to installation into the cylinder head.

(Rev. 2004) *All information subject to change without notice.*
6SE483 0401 Copyright © 2004 DETROIT DIESEL CORPORATION

6. Apply a thin coat of clean fuel oil to the injector seal rings and install them in the injector nut ring grooves. Make sure the seals are properly seated see Figure 2-35.

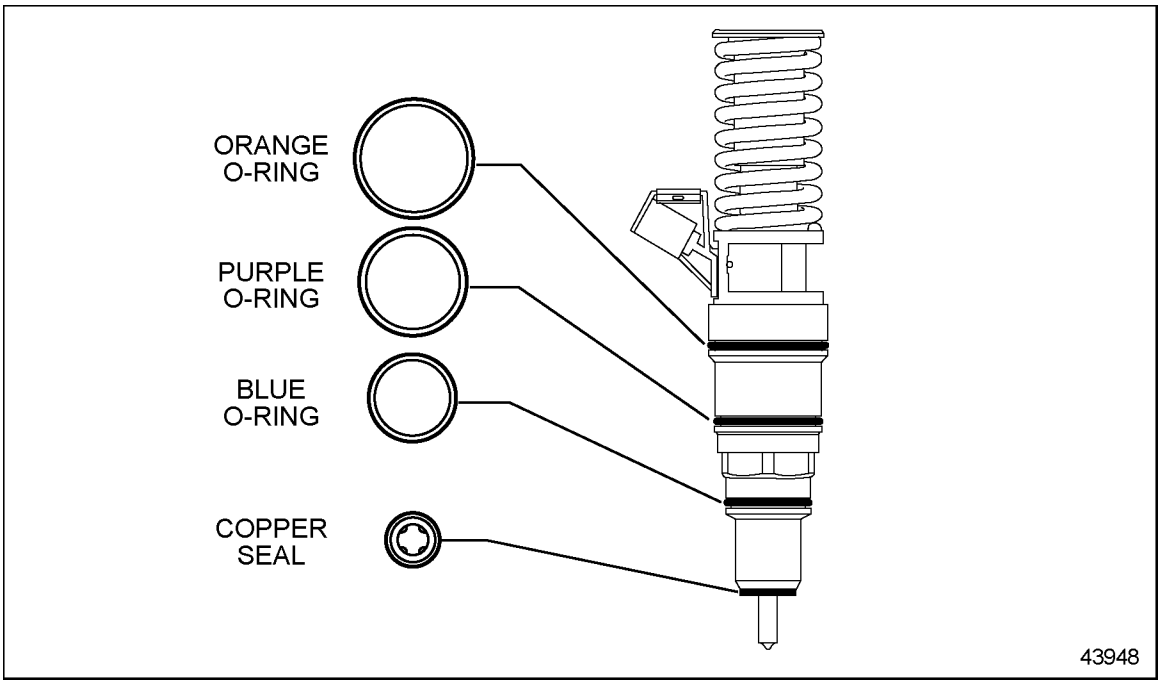

Figure 2-35 N3 Injector Seal Rings

 Copyright © 2004 DETROIT DIESEL CORPORATION

7. Install the injector and hold down clamp as an assembly into its respective injector tube bore. Align the hold down clamp over the retaining stud, install the washer and bolt into injector clamp and torque to 55-65 N·m (40-48 lb·ft). See Figure 2-36.

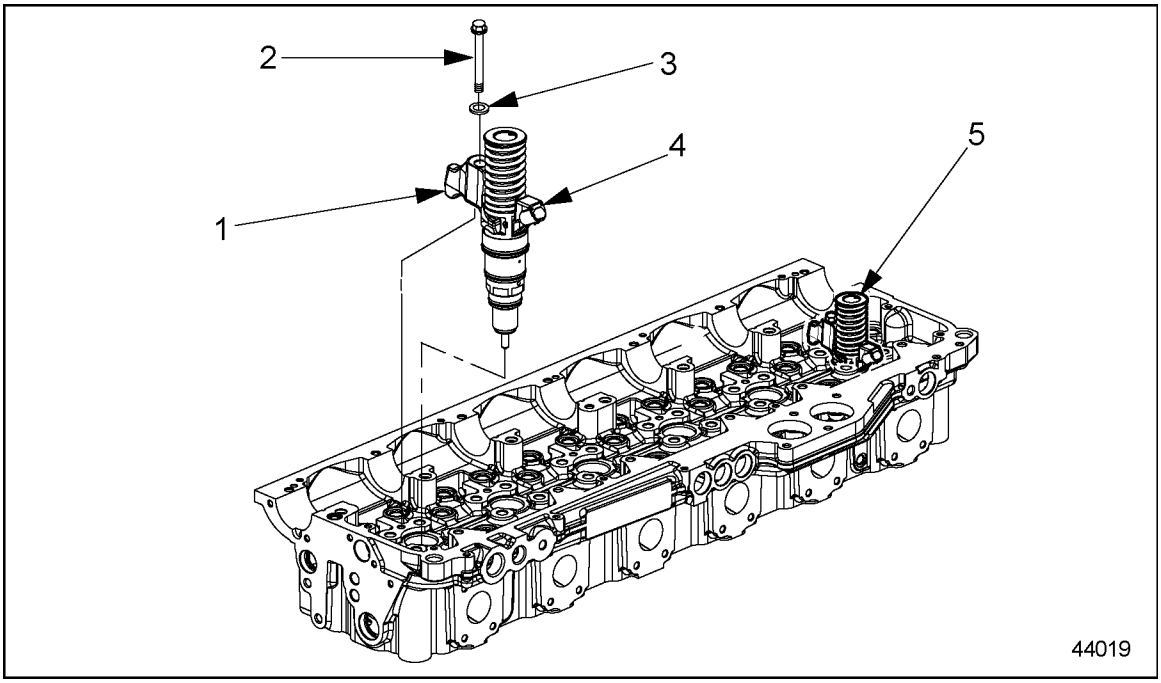

1. Injector Clamp
2. Bolt
3. Washer
4. N3 Injector
5. N3 Injector Installed

Figure 2-36 N3 Injector and Related Parts

(Rev. 2004) *All information subject to change without notice.*
6SE483 0401 Copyright © 2004 DETROIT DIESEL CORPORATION

8. Install the N3 EUI harness plug into the injector connector making sure the locking tang clicks into place. See Figure 2-37.

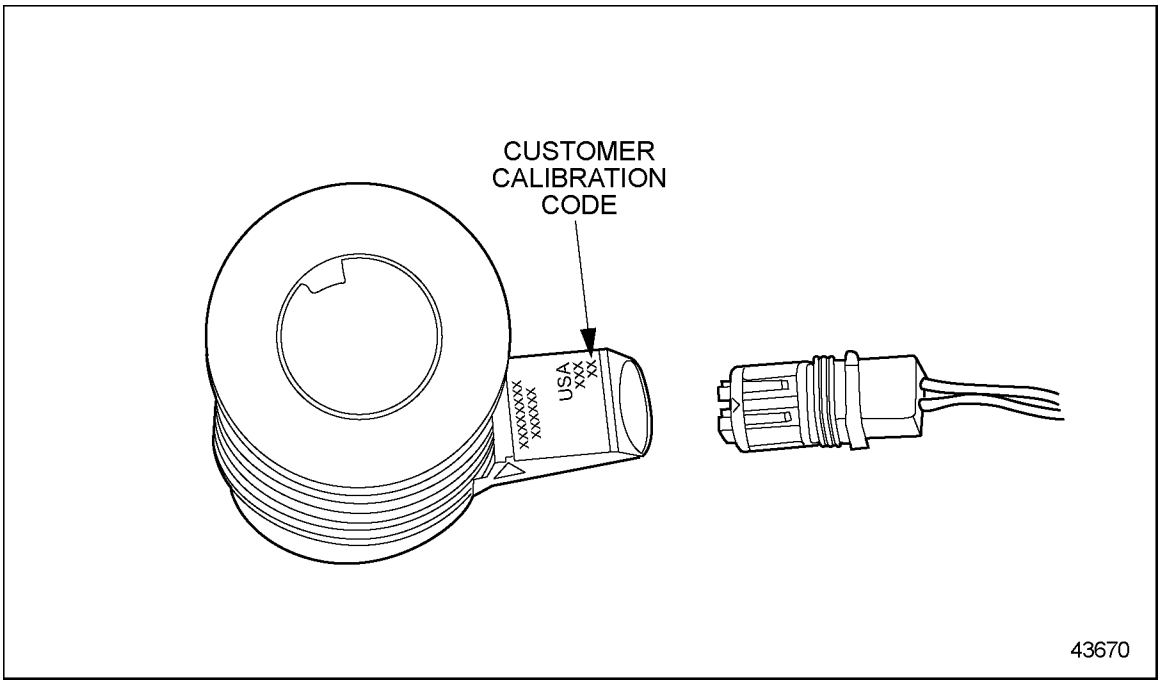

Figure 2-37 N3 Injector and Harness Connection

9. Install the rocker arm shafts, with rocker arms in place. Refer to section 1.3.3
10. Adjust the intake and exhaust valve clearances and injector height. Refer to section 12.2
11. Install the inlet and outlet fuel lines to the fittings at the rear of the cylinder head. See Figure 2–6.
12. On DDEC V engines, record the injector calibration code from the name plate with the proper cylinder location see Figure 2-37.
13. Install the valve rocker cover. Refer to section 1.6.7
14. For one-piece valve rocker cover, refer to section 1.6.8 For two-piece and three piece valve rocker cover, refer to section 1.6.9
15. Verify installation of N3 Electronic Unit Injector. Refer to section 11.8

 Copyright © 2004 DETROIT DIESEL CORPORATION

2.6 FUEL INJECTOR TUBE

The bore in the cylinder head for the N3 EUI is directly through the cylinder head water jacket. To prevent coolant from contaminating the injector and still maintain maximum cooling of the injector, a stainless steel tube is screwed into the injector bore. The tube has a O-ring installed to create a water and gas-tight seal.

NOTE:
It is recommended that the injector tube be replaced with new a O-ring at the time of engine over haul. The injector tube is reusable.

NOTE:
Do not remove the injector tube for inspection unless a fault in the tube is suspected.

2.6.1 Removal of the Injector Tube

Perform the following steps to remove the injector tube:

1. Remove Rocker Shaft assemblies. Refer to section 1.3.2
2. Remove N3 injector. Refer to section 2.5.2.

NOTICE:
Engine coolant must be drained prior to injector tube removal.

3. Drain engine coolant. Refer to section 13.13.4.

NOTICE:
Do not use excessive force on the injector tube during removal, cracking of the injector tube may occur requiring replacement.

4. Install tool J 46904 into injector bore and align tool with slots in tube and turn counter clockwise to remove.

2.6.1.1 Inspection of Injector Tube

Inspect the injector tube as follows:

1. Inspect injector tube for cracks or defects. If defective replace injector tube.
2. Clean injector tube threads with a fine wire brush, being careful not to abrade the cylinder head to injector tube sealing surface.
3. Clean the injector tube interior sealing surface, a chemical solvent maybe used for cleaning interior sealing surface.

(Rev. 2004) *All information subject to change without notice.*
6SE483 0401 Copyright © 2004 DETROIT DIESEL CORPORATION

2.6.2 Installation of Injector Tube and Seal

Perform the following steps for injector tube installation:

1. Clean injector bore of debris.

NOTE:
Replace with new O-ring when injector tube is removed or replaced.

2. Install O-ring in groove on injector tube, a small amount of silicone based O-ring lubrication will aid in the installation. See Figure 2-38.

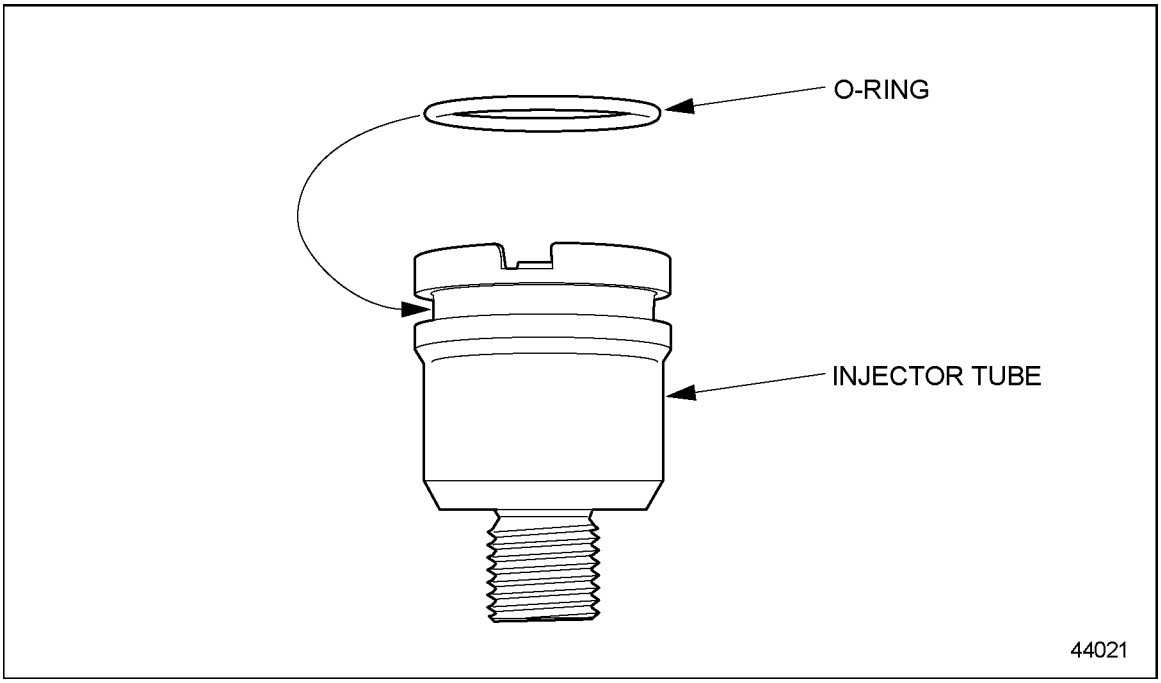

Figure 2-38 Injector Tube and O-ring

3. Coat the threads of injector tube with a high temperature nickel based antiseize lubricant.

 Copyright © 2004 DETROIT DIESEL CORPORATION

4. Install the injector tube on tool J 46904. See Figure 2-39.

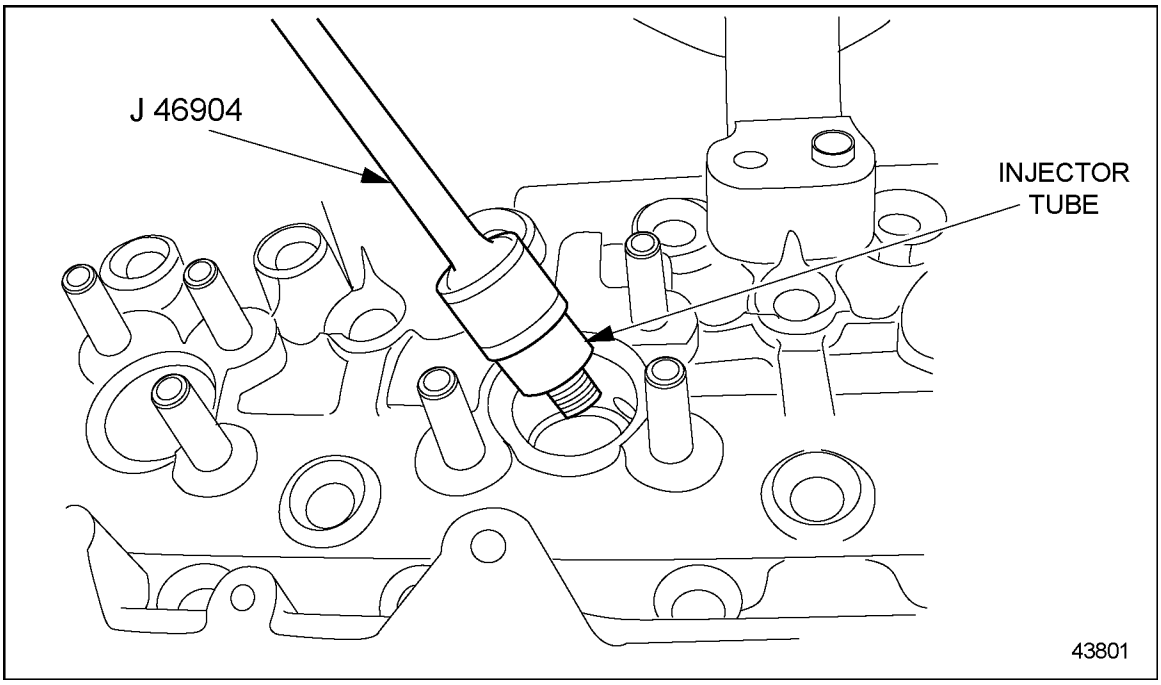

Figure 2-39 Installation of Injector Tube on Tool J 46904

5. Using tool J 46904 install injector tube in injector bore. See Figure 2-40.

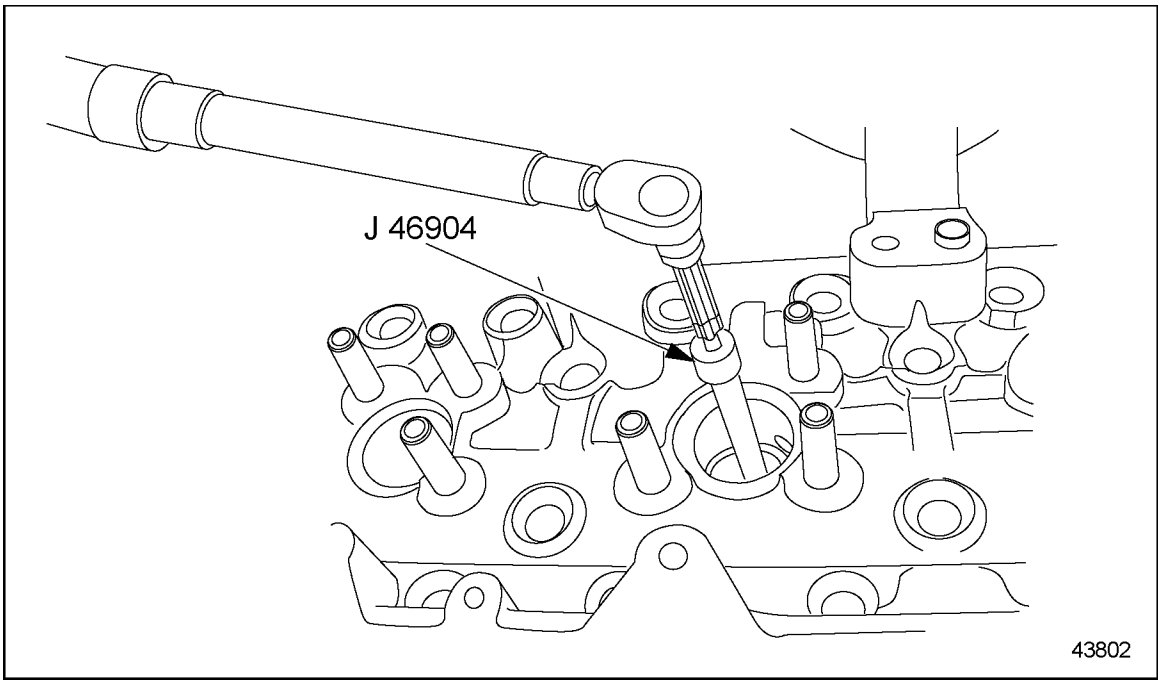

Figure 2-40 Installation of Injector Tube in Cylinder Head

(Rev. 2004) *All information subject to change without notice.*
6SE483 0401 Copyright © 2004 DETROIT DIESEL CORPORATION

6. Torque injector tube to 35-45 N·m (26-33 lb·ft).
7. Release torque approximately 180 degrees.
8. Torque injector tube to 35-45 N·m (26-33 lb·ft) ensure the tip of the injector tube is flush or below the fire deck, the tube should not protrude.

 Copyright © 2004 DETROIT DIESEL CORPORATION

2.7 FUEL PUMP WITH SEPARATE DRIVE SHAFT AND HUB

The former fuel pump system consists of the following components:

- ☐ Barnes positive displacement type fuel pump; separate drive shaft
- ☐ Air compressor drive hub
- ☐ Gear train mounting adaptorThis pump has been replaced, effective July 1995, with an improved fuel pump. The pumps are similar, except the improved pump has a one-piece drive. These pump assemblies are completely interchangeable. Components are not interchangeable.

(Rev. 2004) *All information subject to change without notice.*
6SE483 0401 Copyright © 2004 DETROIT DIESEL CORPORATION

See Figure 2-41for the former positive displacement gear-type fuel pump.

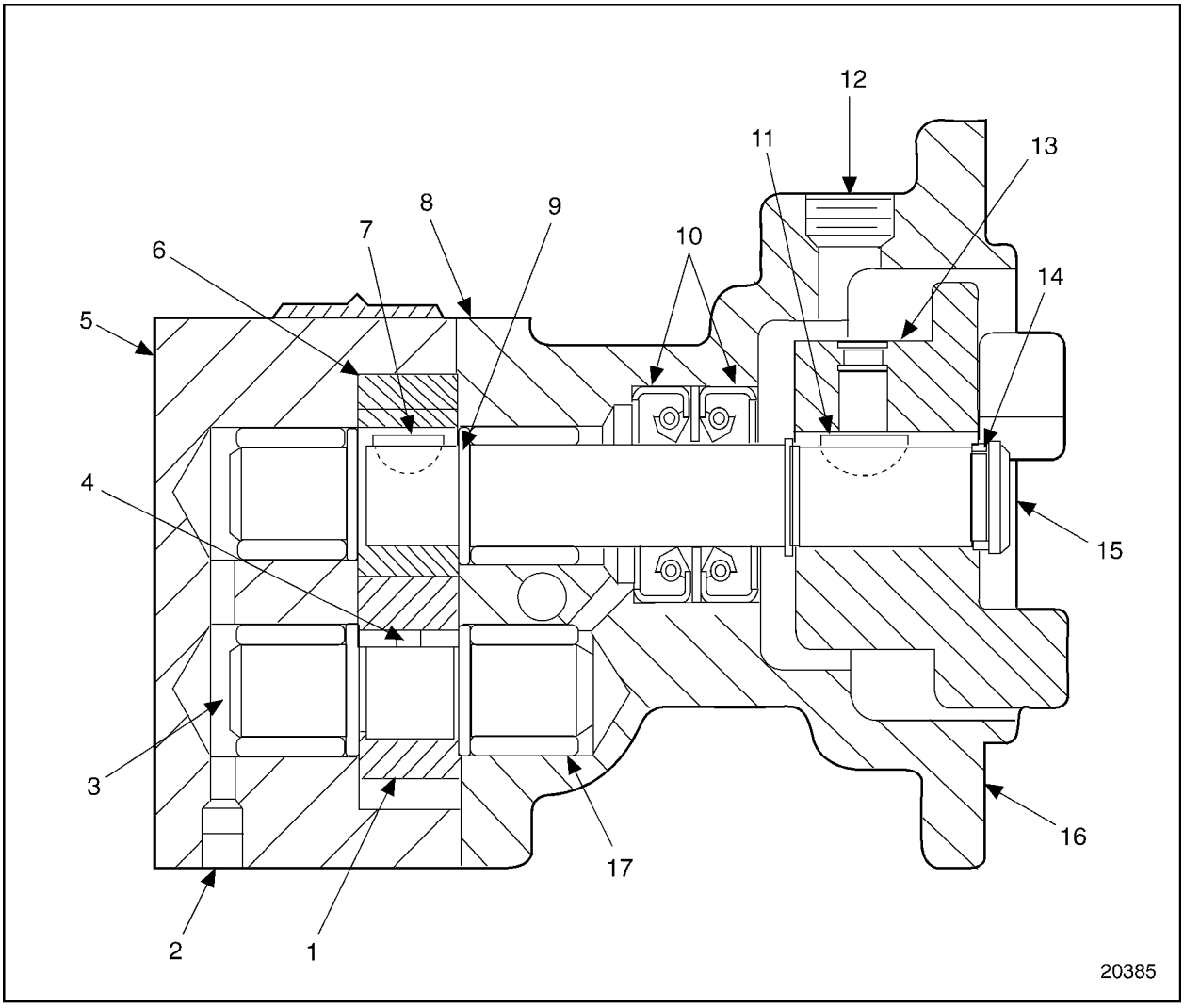

1. Driven Gear
2. Plug
3. Driven Shaft
4. Pin
5. Cover
6. Drive Gear
7. Key
8. Gasket
9. C-clip
10. Oil Seals
11. Key
12. Plug, Relief Valve
13. Drive Hub
14. C-clip
15. Drive Shaft
16. Pump Body
17. Needle Bearing

Figure 2-41 Former Fuel Pump Assembly with Separate Drive Shaft and Hub Assembly

 Copyright © 2004 DETROIT DIESEL CORPORATION

The fuel pump transfers fuel from the supply tank to the fuel injectors. The pump circulates an excess supply of fuel through the injectors which purges the air from the system and cools the injectors. The unused portion of fuel returns to the fuel tank by means of a fuel return line.

The fuel pump is attached to either a drive assembly mounted on the rear side of the gear case, see Figure 2-42, or driven off of the rear of the air compressor. See Figure 2-43.

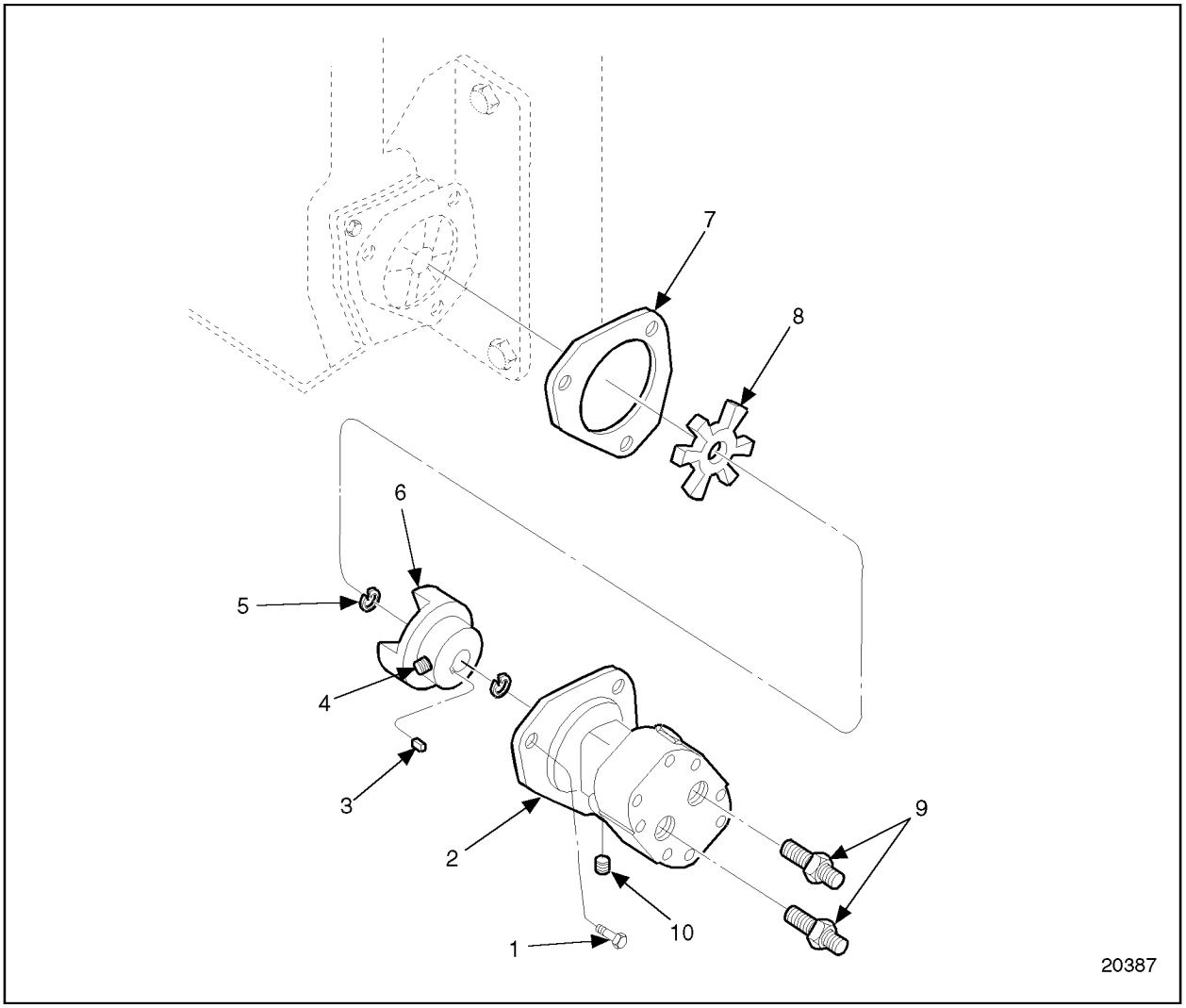

1. Bolt
2. Fuel Pump Assembly
3. Key
4. Set Screw
5. C-clip
6. Drive Hub
7. Gasket
8. Fuel Pump Coupling
9. Fuel Fitting
10. Plug

Figure 2-42 Fuel Pump Drive Coupling

(Rev. 2004) *All information subject to change without notice.*
6SE483 0401 Copyright © 2004 DETROIT DIESEL CORPORATION

The fuel pump cover and body are positioned by two dowels. The dowels aid in maintaining alignment between the body, cover and shafts. The mating surfaces of the pump body and cover are perfectly flat ground surfaces. A gasket is used between the cover and body.

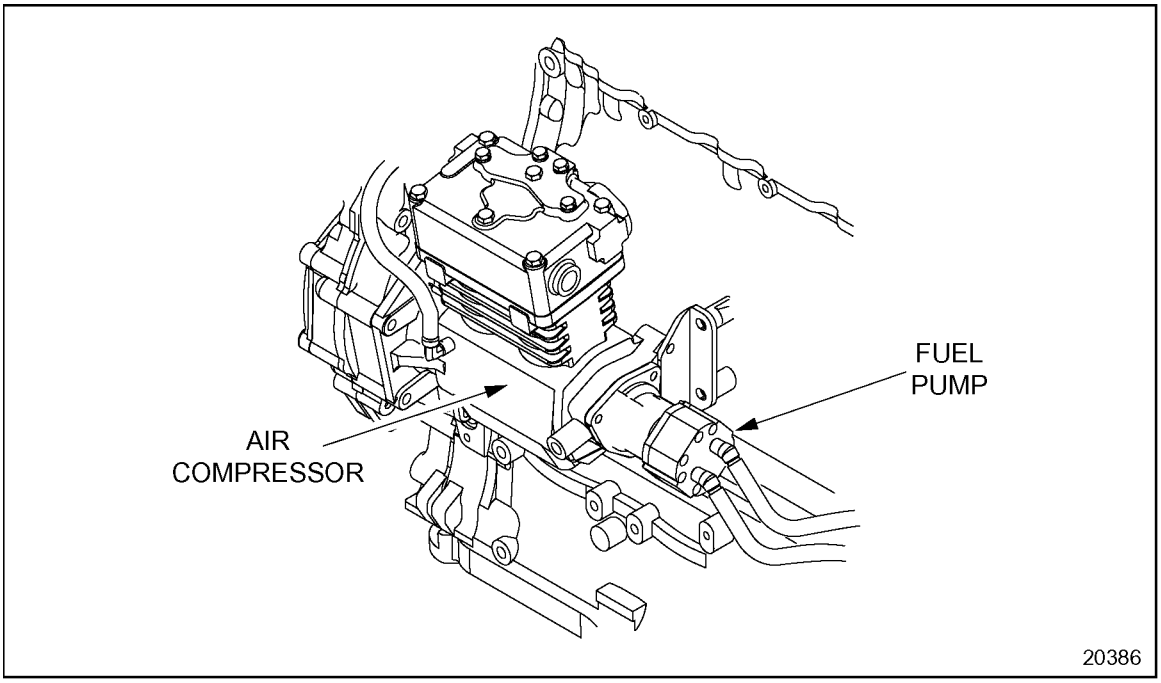

Figure 2-43 Fuel Pump Mounting

The fuel pump body is recessed to provide running space for the pump gears. Recesses are also provided at the inlet and outlet positions of the gears. The small relief valve vent (5) (see Figure 2-44) permits the fuel oil in the inlet side of the pump to lubricate the relief valve at its outer end. This eliminates the possibility of a hydrostatic lock which would render the relief valve inoperative. Pressurized fuel contacts the relief valve through the passage to the head of the relief valve (1) and provides for relief of excess discharge pressures.

Fuel re-enters the inlet side of the pump through the passage to head of the relief valve (6) when the discharge pressure is great enough to move the relief valve back from its seat. Part of the relief valve may be seen through the passage to the head of the relief valve (6).

The gear teeth vent cavity (7) provides escape for the fuel oil that is squeezed out of the gear teeth as they mesh together on the discharge side of the pump. Otherwise, fuel trapped at the root of the teeth would tend to force the gears apart, resulting in undue wear on the gears, shafts, body, and cover. See Figure 2-44.

 Copyright © 2004 DETROIT DIESEL CORPORATION

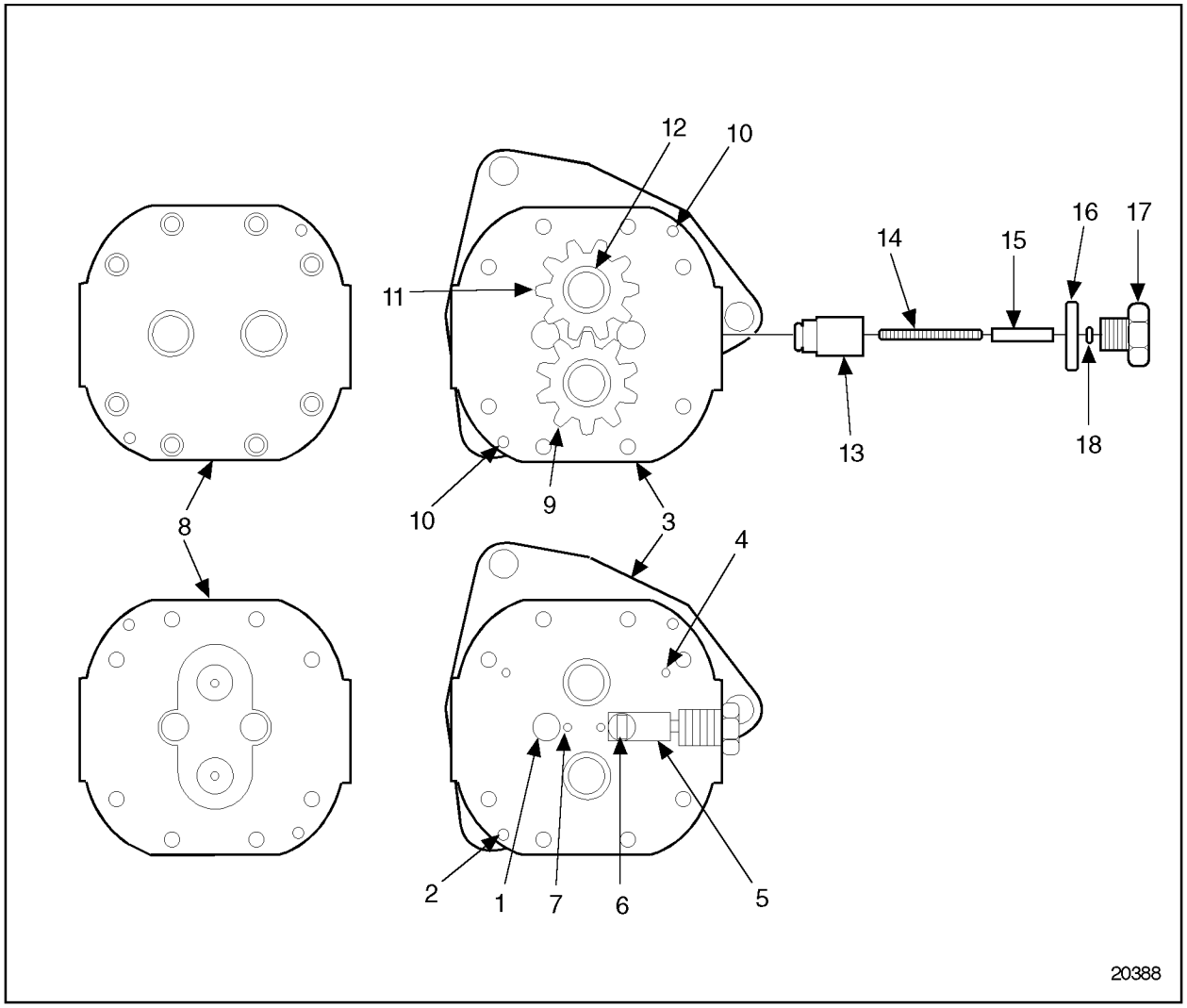

1. Passage to Head of Relief Valve-Pressure Side
2. Dowel Hole
3. Body
4. Oil Seal Vent to Suction Side
5. Relief Valve Vent to Suction Side
6. Passage to Head of Relief Valve-Suction Side
7. Gear Teeth Vent Cavity
8. Cover
9. Driven Gear
10. Dowel
11. Drive Gear
12. Drive Shaft Gear
13. Relief Valve
14. Spring
15. Pin
16. O-ring
17. Plug
18. Spacer

Figure 2-44 Fuel Pump

(Rev. 2004) *All information subject to change without notice.*
6SE483 0401 Copyright © 2004 DETROIT DIESEL CORPORATION

Two oil seals are pressed into the bore in the flanged side of the pump body to retain the fuel oil in the pump and the lubricating oil in the fuel pump drive and gear case. The oil seal vent (4) (see Figure 2-44) serves as a vent passageway in the body between the inner oil seal and the suction side of the pump. This prevents building up any fuel oil pressure around the shaft ahead of the inner seal. The oil seals are installed with the lips of the seals facing each other. See Figure 2-45.

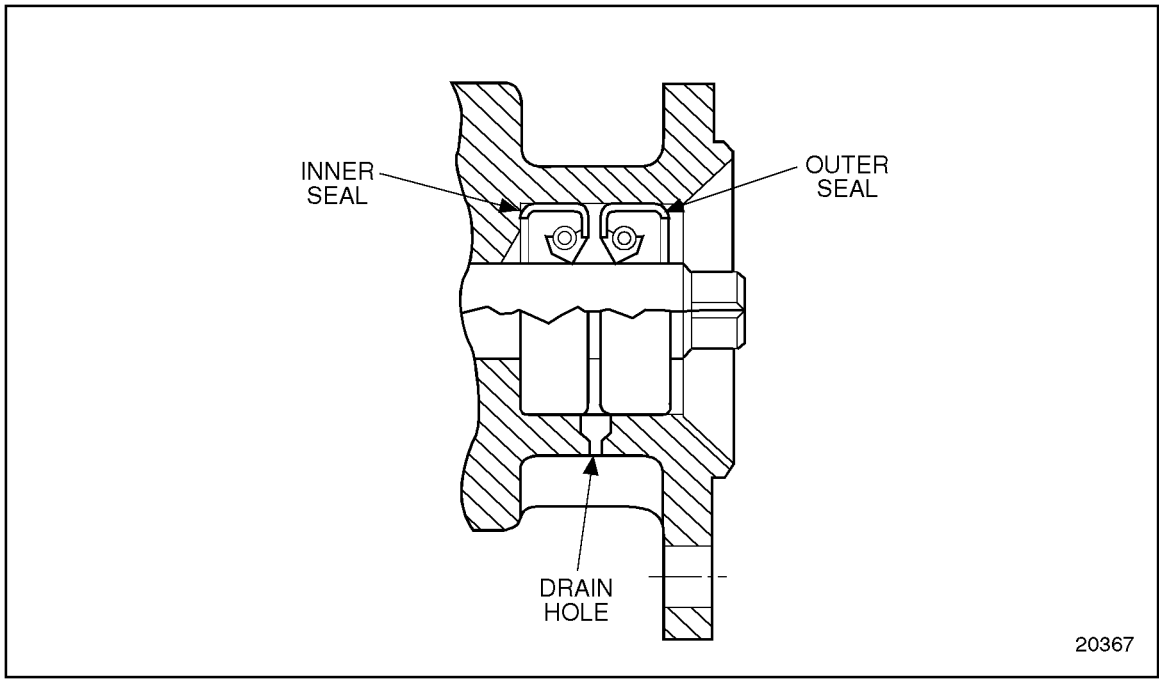

Figure 2-45 Fuel Pump Oil Seal Arrangement

Some fuel oil seepage by the fuel pump can be expected with a running engine and immediately after an engine has been shut down. This is especially true with a new fuel pump, new pump seals, or both, as the seals have not yet conformed to the pump drive shaft. Fuel pump seals will always allow some seepage. A drain hole in the pump body is provided to prevent fuel oil from being retained between the seals. Excessive fuel retention between the seals could provide enough pressure to cause engine oil dilution by fuel; therefore, drainage of the excess fuel oil is mandatory. However, if leakage exceeds one drop per minute, replace the seals. The drain hole should be checked for plugging at normal scheduled maintenance.

 Copyright © 2004 DETROIT DIESEL CORPORATION

A spring-loaded relief valve incorporated in the pump body normally remains in the closed position, operating only when pressure on the outlet side (to the fuel filter) reaches approximately 448 kPa (65 lb/in.^{2}).

In operation, fuel enters the pump on the suction side and fills the space between the gear teeth that are exposed at that instant. The gear teeth then carry the fuel oil to the discharge side of the pump and, as the gear teeth mesh in the center of the pump, the fuel is forced out the outlet cavity. Since this is a continuous cycle and fuel is continually being forced into the outlet cavity, the fuel flows from the outlet cavity into the fuel lines and through the engine fuel system under pressure.

The pressure relief valve relieves the discharge pressure by bypassing the fuel from the outlet side of the pump to the inlet side when the discharge pressure reaches approximately 448 to 517 kPa (65 to 75 lb/in.^{2}). The fuel pump should maintain the fuel pressure as shown in the maintenance section. Refer to section 11.5.

(Rev. 2004) *All information subject to change without notice.*
6SE483 0401 Copyright © 2004 DETROIT DIESEL CORPORATION

2.7.1 Repair or Replacement of Former Fuel Pump

To determine if repair or replacement of the fuel pump is necessary. See Figure 2-46.

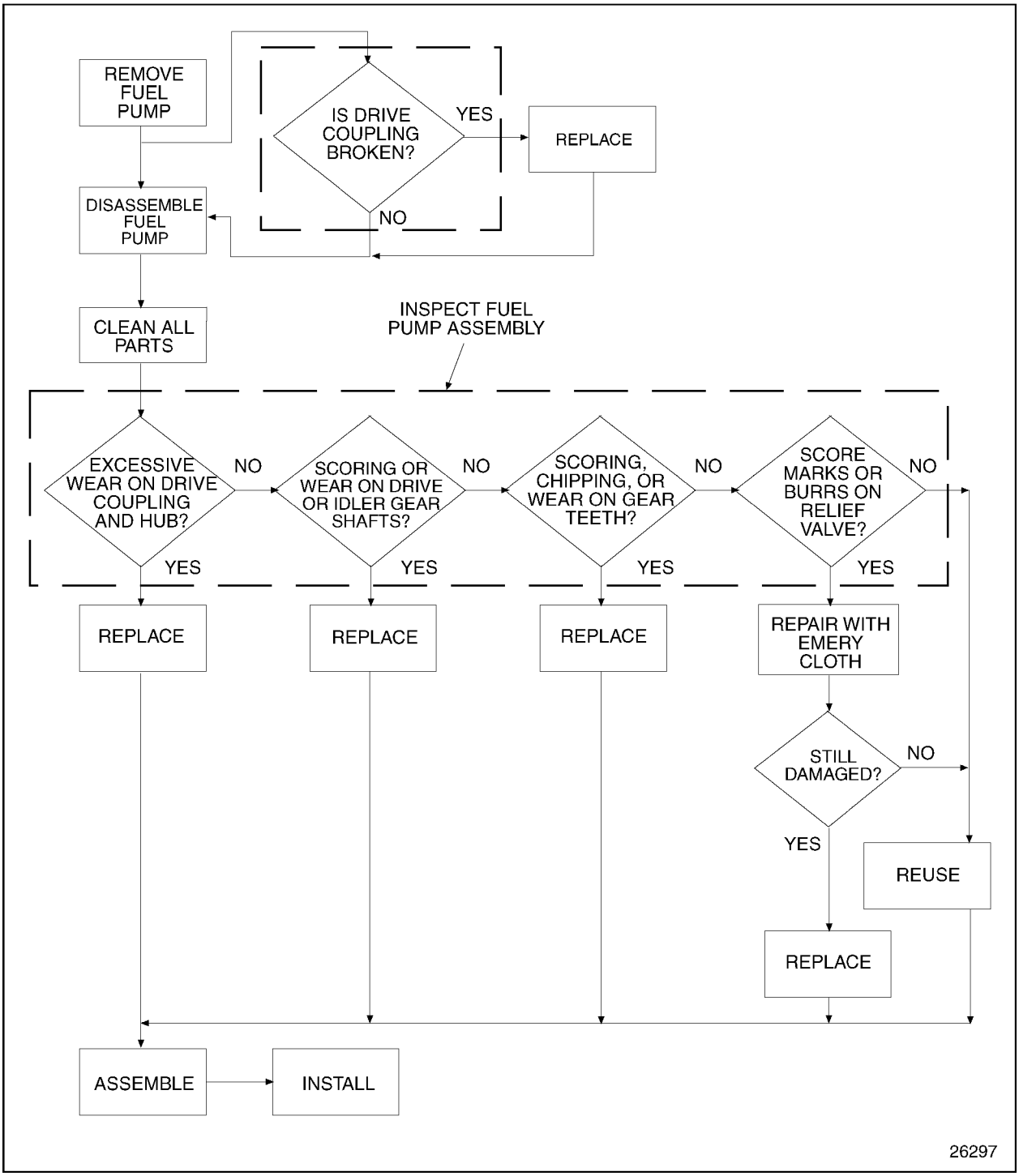

Figure 2-46 Flowchart for Repair or Replacement of Former Fuel Pump

 Copyright © 2004 DETROIT DIESEL CORPORATION

2.7.2 Removal of Former Fuel Pump

Perform the following steps for fuel pump removal:

1. Disconnect the fuel lines from the inlet and outlet openings of the fuel pump.
2. Remove the three fuel pump attaching bolts and withdraw the pump from the mounting adaptor on the gear case or air compressor.
3. Check the drive coupling and, if broken or worn, replace it with a new coupling.

2.7.3 Disassembly of Former Fuel Pump

Perform the following steps for fuel pump disassembly:

1. With the fuel pump removed from the engine, clamp the pump in a bench vise equipped with soft jaws.
2. Remove fuel inlet and outlet fittings from fuel pump cover.
3. Remove access hole plug.
4. Use snap ring pliers, J 4880, and remove outer drive hub positioning C-clip.

NOTE:
It may be necessary to rotate the drive hub and shaft to align the set screw with access hole.

5. Working through access hole, loosen but do not remove set screw securing drive hub to drive key.
6. Slide drive hub off shaft and remove drive key from shaft.
7. Use snap ring pliers, J 4880, and remove inner drive hub positioning C-clip.

(Rev. 2004) *All information subject to change without notice.*
6SE483 0401 Copyright © 2004 DETROIT DIESEL CORPORATION

8. Position pump on holding fixture, J 38767-1, hub side down. See Figure 2-47.

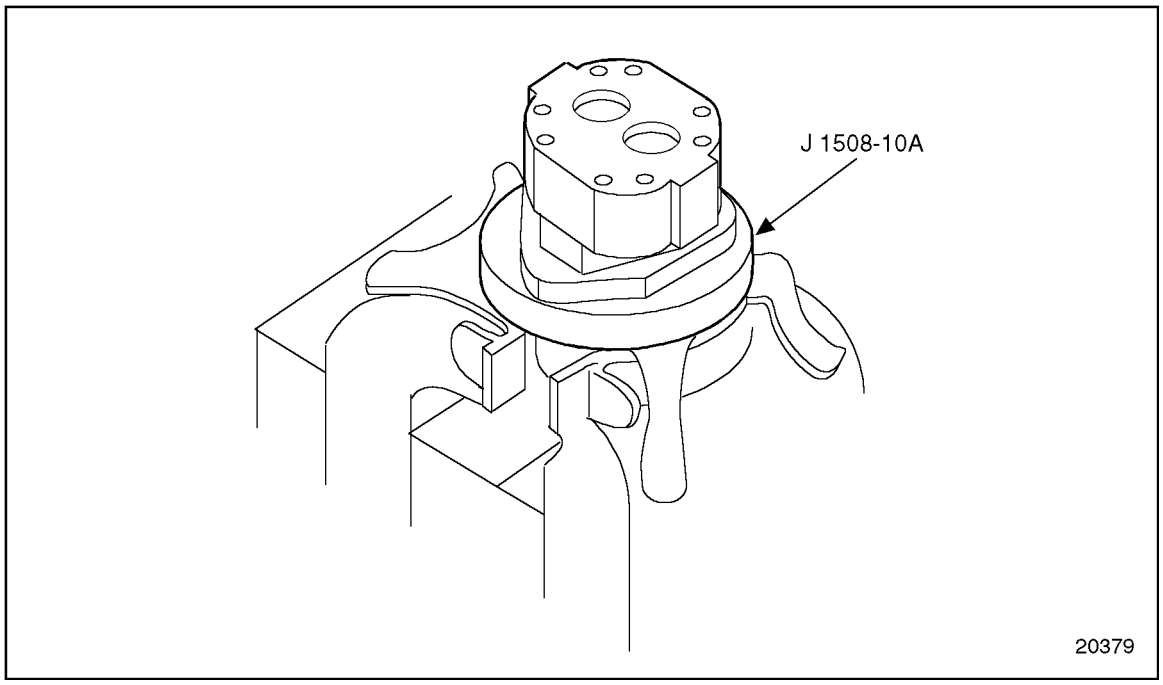

Figure 2-47 Fuel Pump Holding Fixture

9. Using a No. E-8 torx socket, J 25359-11, remove eight (8) bolts securing the pump cover to body.

NOTE:
Note the color of the foil gasket, gold or silver. If the pump is reassembled, the same color foil gasket must be used. The gaskets are of different thickness and establish correct internal clearance.

10. Separate the pump cover from the body by lifting it off the shafts and dowels. Remove and discard the foil gasket between the cover and body.

NOTE:
When the drive shaft is removed from the pump, the oil seals must be replaced.

11. Withdraw the driven shaft, drive shaft, and gear assemblies from the pump body.
12. Remove the C-clips that retain the gears on the shafts, taking care not to misplace the drive pin from the drive shaft or the key from the drive shaft.
13. Remove the gears from the shafts.

NOTE:
When the drive shaft is removed, the drive shaft needle bearing assembly in the pump body must also be removed to allow installation of the oil seal protector used during reassembly.

 Copyright © 2004 DETROIT DIESEL CORPORATION

14. Use needle bearing remover, J 33853, with slide hammer and remove the needle bearing assemblies from the pump body and cover. See Figure 2-48.

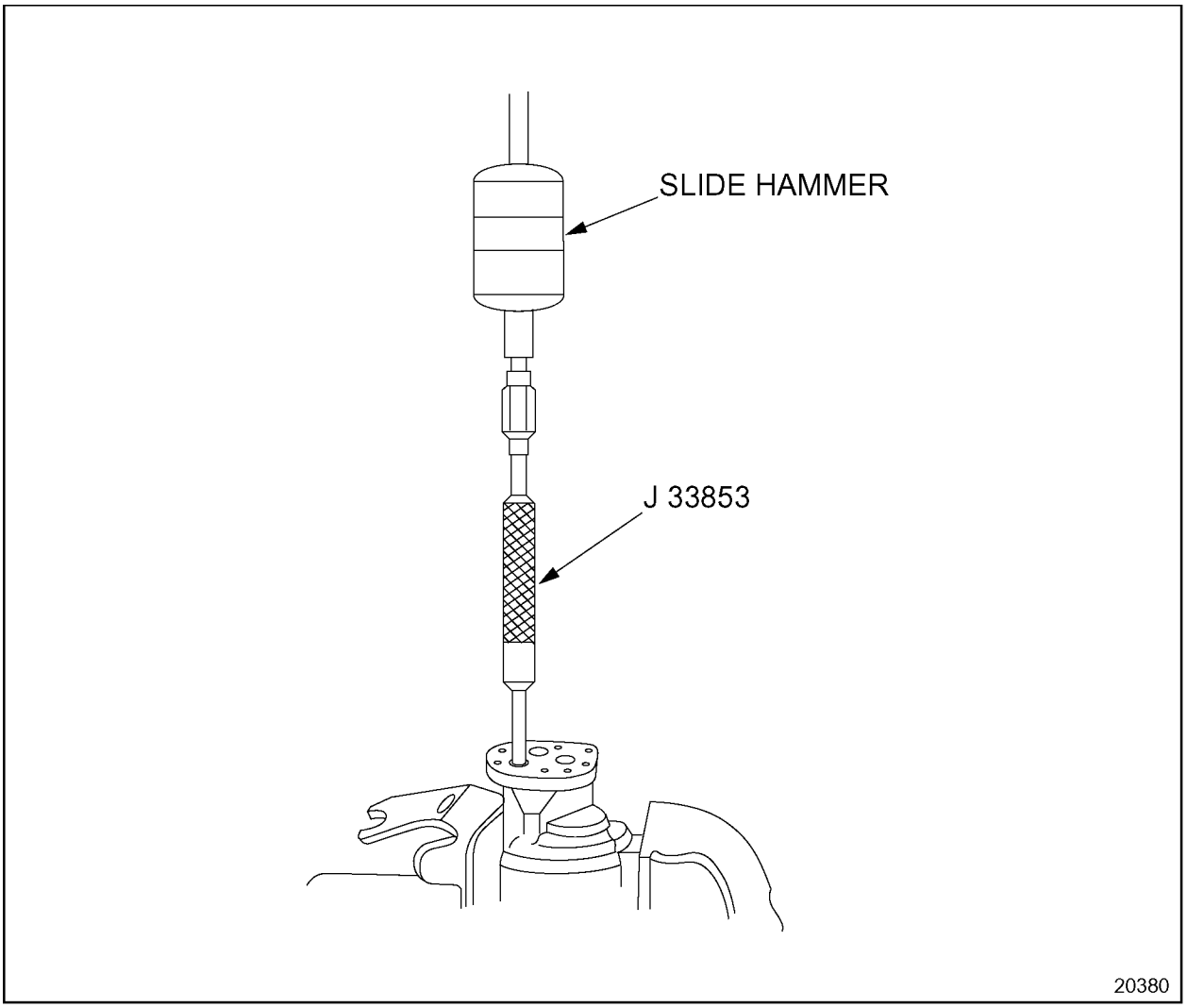

Figure 2-48 Needle Bearing Removal

(Rev. 2004) *All information subject to change without notice.*
6SE483 0401 Copyright © 2004 DETROIT DIESEL CORPORATION

15. Position pump on fixture, J 38767-1, and insert lip of seal remover, J 1508-13, between the inner and outer oil seals. Tap the tool with a light hammer to drive the outer seal out of the pump body. See Figure 2-49. Discard the seal.

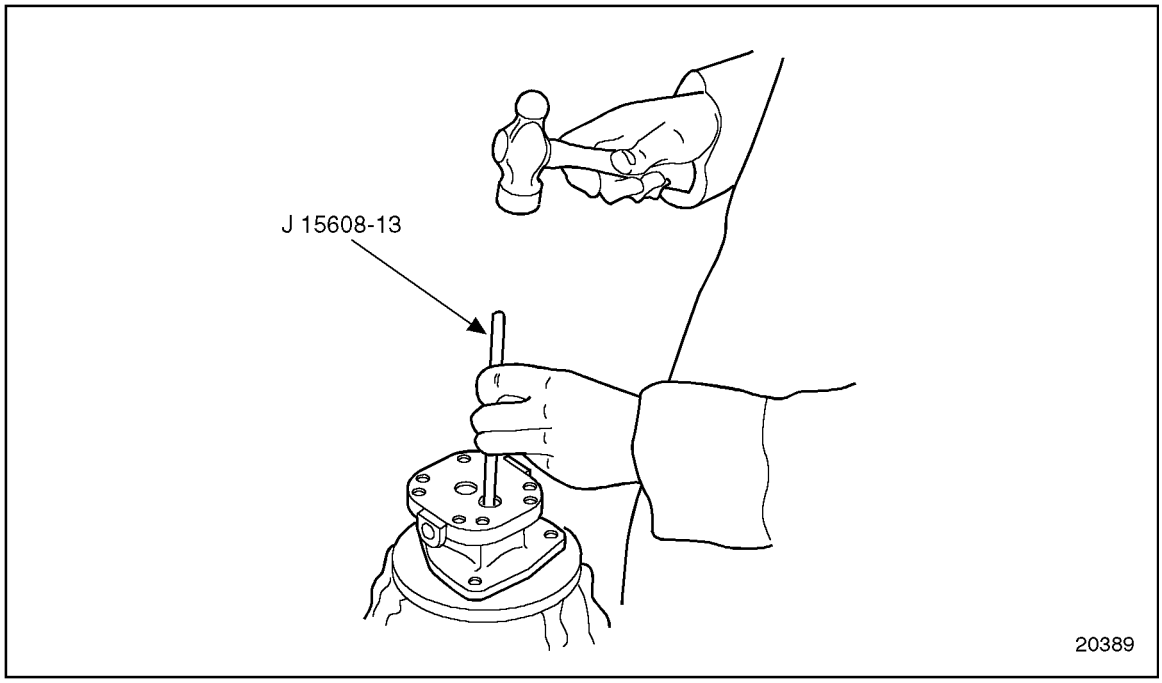

Figure 2-49 Oil Seal Removal

16. Repeat the process removing the inner seal by placing the tool lip against the inside of the seal case. Discard the seal.
17. Unscrew and remove the relief valve plug and remove the relief valve plunger, spring and pin from the bore.
18. Remove the spacer from the relief valve plug.
19. Remove and discard the O-ring seal under the head of the plug.

 Copyright © 2004 DETROIT DIESEL CORPORATION

2.7.3.1 Cleaning and Inspection of Former Fuel Pump

Perform the following steps to clean and inspect the fuel pump parts:

CAUTION:

To avoid injury from flying debris when using compressed air, wear adequate eye protection (face shield or safety goggles) and do not exceed 40 psi (276 kPa) air pressure.

1. Clean all parts with clean fuel oil, before inspection.
2. Dry the parts with compressed air.
3. Visually inspect the drive coupling and hub for wear or damage.
   [a] If wear or damage is found, replace the drive coupling and hub.
   [b] If no wear or damage is found. Reuse the drive coupling and hub.
4. Oil seals, once removed, must be discarded and replaced with new seals. Oil seals must be removed whenever the fuel pump drive shaft is withdrawn.
5. Visually inspect the drive and idler gear shafts for scoring or wear.
   [a] If scoring or wear is found, replace the drive and idler gear shafts.
   [b] If no scoring or wear is found, reuse the drive and idler gear shafts.
6. Visually check the gear teeth for scoring, chipping or wear.
   [a] If gear teeth are scored, chipped or worn, replace the parts as necessary.
   [b] If gear teeth are not scored, chipped or worn, reuse the parts.
7. Visually inspect the relief valve. The valve must be free of score marks and burrs.
   [a] If the relief valve is scored and cannot be cleaned up with fine emery cloth, replace the relief valve.
   [b] If the relief valve is not damaged, reuse the part.

(Rev. 2004) *All information subject to change without notice.*
6SE483 0401 Copyright © 2004 DETROIT DIESEL CORPORATION

2.7.4 Assembly of Former Fuel Pump

Perform the following steps for fuel pump assembly:

1. Lubricate the lips of the oil seals and pilot of oil seal installer, J 1508-8, with a light film of clean engine oil.
2. Place oil seal adaptor, J 34158, on the pilot with the wide end of the adaptor against the installer handle.
3. Place oil seal on installer pilot with seal case against the adaptor.
4. Support the pump body on wood blocks, hub side up, and insert the pilot into the shaft bore positioning the seal on the bore. Use a light hammer and drive the seal into the bore until the adaptor is bottomed against the pump body. See Figure 2-50.

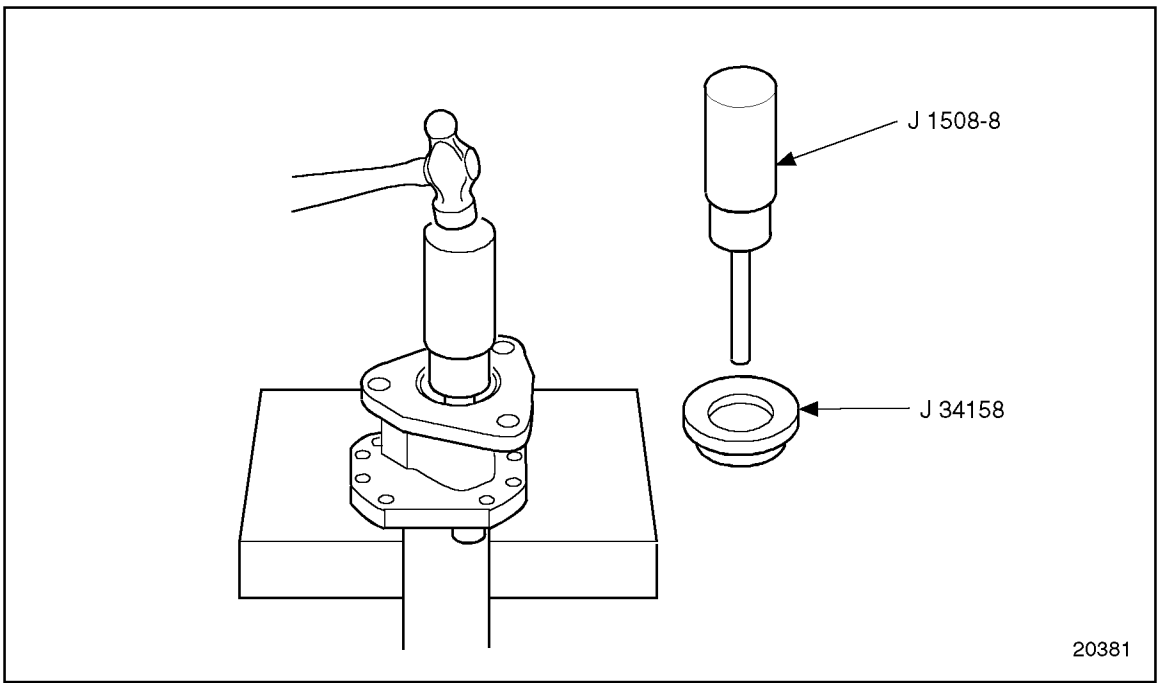

Figure 2-50 Installing Inner Oil Seal

 Copyright © 2004 DETROIT DIESEL CORPORATION

5. Remove the installer and reverse the adaptor, placing the narrow end against the installer handle. See Figure 2-51.

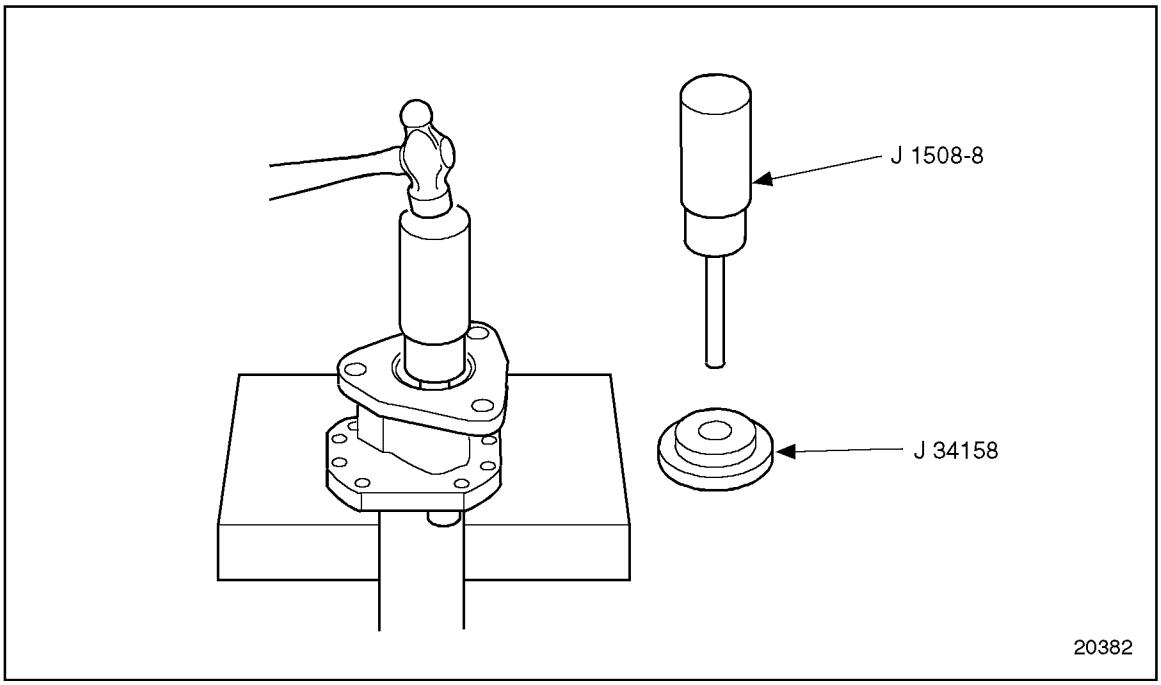

Figure 2-51 Installing Outer Oil Seal

6. Place a second seal on the installer pilot with the seal case faced away from the adaptor.
7. Carefully reinsert the installer pilot through the inner seal and position the second outer seal on the bore. Use a light hammer and drive the seal into the bore until the adaptor is bottomed against the pump body.
8. Press a fuel pump gear positioning C-clip directly into inner groove of fuel pump drive shaft opposite the drive hub end of the shaft.
9. Install drive key in slot on the drive shaft and slide the gear on the shaft indexing the keyway in the gear with the key.
10. Press a second C-clip directly into the groove behind the gear to retain it in position.
11. As the driven shaft is reversible, press a C-clip directly into either groove on the shaft.
12. Insert driven gear pin into its hole in the driven shaft with the square head of the pin parallel to the shaft. Slide the gear on the shaft indexing the keyway in the gear over the square head of the pin.
13. Press a second C-clip directly into the groove behind the gear to retain it in position.

NOTE:
The bearing numbers should always be against the tool during installation.

(Rev. 2004) *All information subject to change without notice.*
6SE483 0401 Copyright © 2004 DETROIT DIESEL CORPORATION

14. With the pump cover on a bench, inside face up, position a new needle bearing assembly on bearing installer, J 33854, with the bearing numbers against the installer. Position the bearing carefully on a shaft bore in the cover and with a light hammer drive the bearing into the bore until the installer is flush against the cover surface. See Figure 2-52. Repeat the procedure, installing a new bearing assembly in the remaining shaft bore.

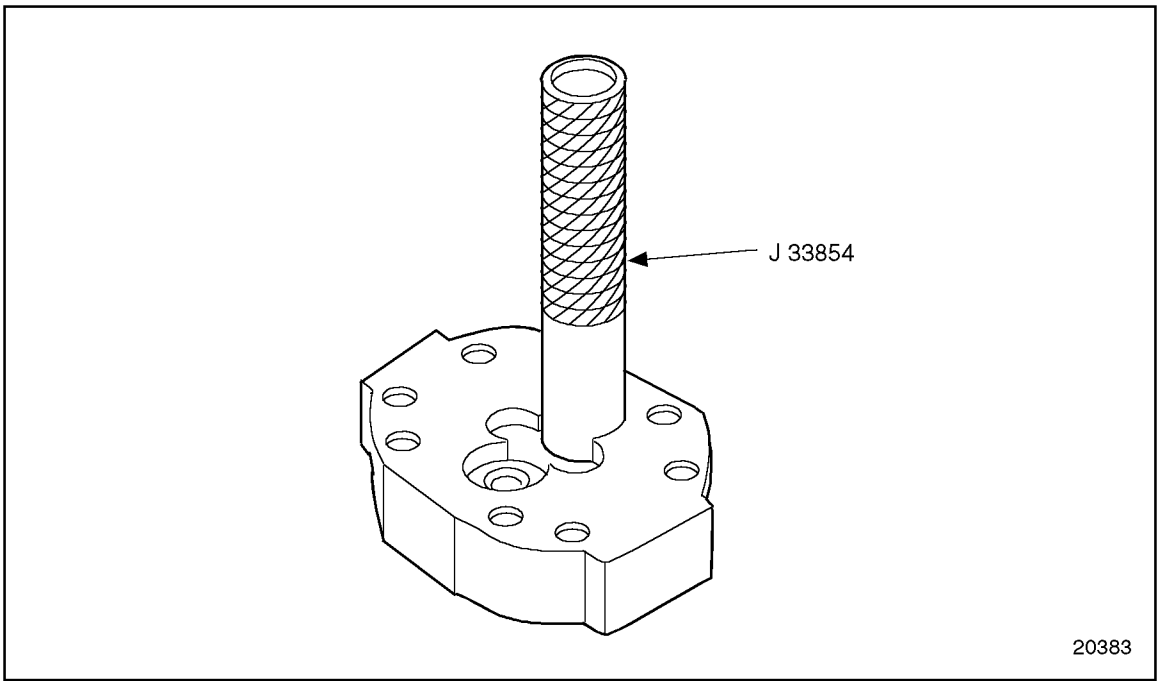

Figure 2-52 Bearing Assembly Installation

NOTE:
Do not install a needle bearing assembly in the drive shaft bore until all other needle bearings have been installed and the oil seal protector has been positioned in the seals.

15. Position the pump body on a bench, hub side down, and following the same bearing installation procedure, install a new needle bearing assembly in the driven shaft bore in the body.

 Copyright © 2004 DETROIT DIESEL CORPORATION

NOTICE:

The seal protector must remain in place on both seals during installation of the needle bearing assembly in the drive shaft bore. If the protector is allowed to come out before the drive shaft is installed, the bearing must be removed and discarded and the protector reinstalled. The protector will be pushed out during drive shaft installation.

16. With the pump body on a bench, hub side down, lubricate the outside of seal protector, J 33021-A, with clean engine oil. Install the solid end of the protector down through both seals until it contacts the bench. See Figure 2-53. Approximately 3 mm (1/8 in.) of the open end of the protector should remain above the inner seal.

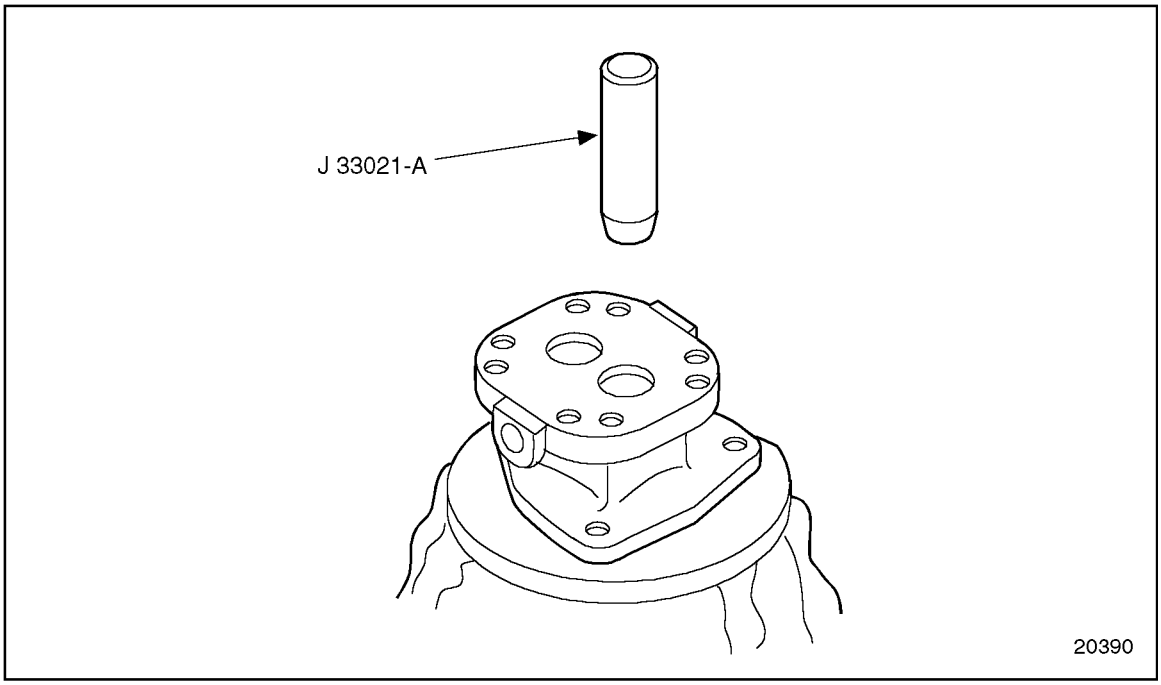

Figure 2-53 Seal Protector Installation

(Rev. 2004) *All information subject to change without notice.*
6SE483 0401 Copyright © 2004 DETROIT DIESEL CORPORATION

17. Install a new needle bearing assembly in the drive shaft bore. See Figure 2-54.

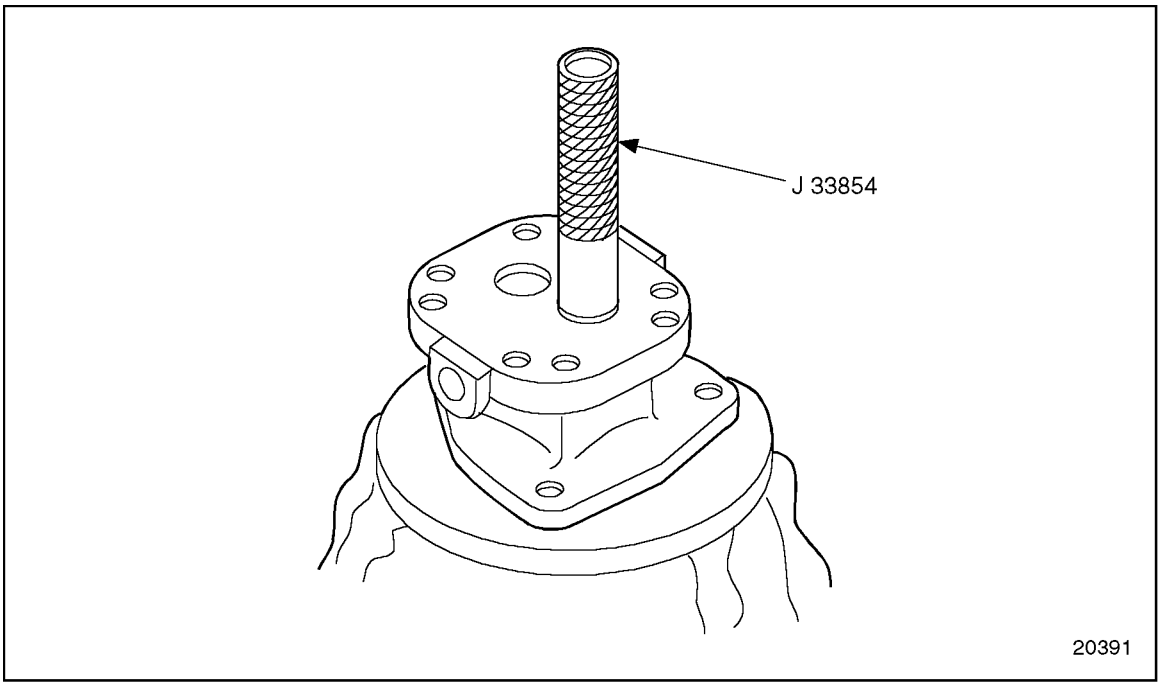

Figure 2-54 Drive Shaft Bearing Installation

 Copyright © 2004 DETROIT DIESEL CORPORATION

18. Carefully insert the drive hub end of the drive shaft through the needle bearing assembly and into the seal protector. Ensure the shaft is fully seated in the seal protector.
19. Hold the shaft down in the seal protector and lift the pump body up against the gear. With the gear in contact with the pump body, lift the body and remove the seal protector from the drive shaft.

NOTE:
Hold the shaft in position with the gear against the pump body to ensure the drive hub C-clip grooves do not contact the oil seals.

20. Position the pump body on the holding fixture, J 38767-1 part of J 38767–A, hub side down.

NOTE:
When assembling pump, always use the same color foil gasket that was originally installed and is listed in Table 2-1. If the color is unknown, measure the depth of the gear cavity in the pump cover and install the required gasket.

Gear Cavity Depth	Color Gasket Used
0.24885-0.24905 in. (6.320-6.325 mm)	Blue
0.24906-0.24925 in. (6.326-6.331 mm)	Amber
0.24935-0.24955 in. (6.333-6.338 mm)	Gold
0.24956-0.24975 in. (6.339-6.344 mm)	Silver

Table 2-1 Gasket Color vs. Gear Cavity Depth Chart (Former Fuel Pump)

(Rev. 2004) *All information subject to change without notice.*
6SE483 0401 Copyright © 2004 DETROIT DIESEL CORPORATION

21. Place a new foil gasket on the face of the pump. With a finger tip, carefully smooth the gasket against the face to ensure there are no wrinkles, creases or bubbles. If present, and they cannot be removed with the finger, remove the gasket and repeat the procedure.
22. Carefully insert the driven shaft and gear assembly in the needle bearing in the pump body.

NOTE:
When positioning the cover, the fuel inlet (stamped on cover) must be on the side of the relief valve bore in the pump body.

23. Position the needle bearing assemblies in the pump cover on the ends of the driven and drive shafts and slide the cover against the pump body.
24. Install eight (8) cover retaining bolts. Use No. E-8 torx socket, J 25359-11 part of J 25359–C, and torque bolts to 12-15 N·m (9-11 lb·ft).

NOTE:
As the outside of the pump body and cover are not machined and to prevent possible distortion, ensure that only the pump cover is gripped and that the vise jaws do not contact both body and cover.

25. Clamp the fuel pump cover in a soft-jawed vise with the relief valve bore in the pump body positioned up.
26. Lubricate the relief plunger with clean engine oil and insert the plunger into the bore with the hollow end up. Insert the relief spring inside the plunger and the pin inside the spring.
27. Install the spacer in the bottom of the spring seat in the plug and install a new O-ring seal under the head of the plug. Thread the plug into the pump body and torque to 8-14 N·m (6-10 lb·ft).
28. Place the pump assembly on a bench, hub side up. Coat the surface of the outer seal with a small amount of lithium base all purpose grease.
29. Use snap ring pliers, J 28507, and install inner drive hub positioning C-clip in its groove in the shaft.
30. Remove the set screw from the drive hub and apply one drop of Loctite® 242 (or equivalent) to the threads and reinstall the set screw two or three turns.
31. Install the hub drive key in the groove on the shaft and slide the hub on the shaft indexing the keyway in the hub with the key in the shaft.
32. Use snap ring pliers and install outer hub retaining C-clip in groove.
33. Rotate the drive shaft and hub to align the hub set screw with the access hole in the pump body. Torque the set screw to 3.8 N·m (2.8 lb·ft).
34. Install access hole plug.
35. Install fuel inlet and outlet fittings in the pump cover.

 Copyright © 2004 DETROIT DIESEL CORPORATION

2.7.5 Installation of Former Gear Train-Driven Fuel Pump

Install the fuel pump as follows:

NOTICE:
It may be necessary to use a brass hammer or fiber mallet to seat the drive assembly. Be careful not to damage the O-ring on installation.

1. Install the drive assembly on the gear case.
2. Install the fuel pump drive bolts and torque to 30-34 N·m (22-25 lb·ft) using the torque pattern. See Figure 2-55.

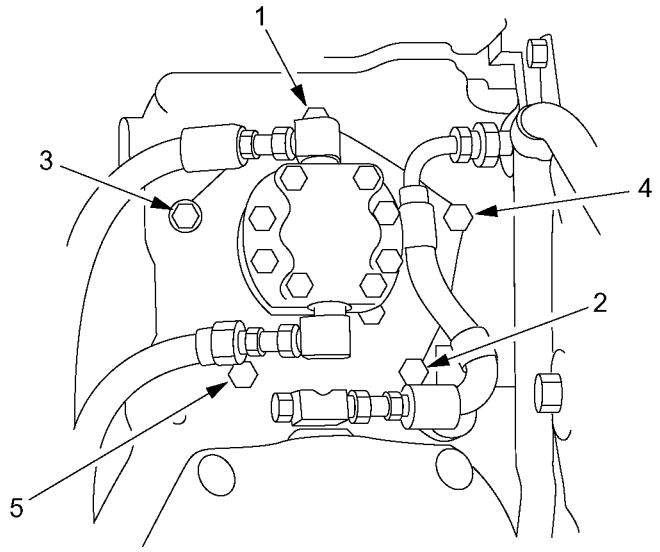

Figure 2-55 Fuel Pump Drive Retaining Bolt Torque Sequence

3. Using a new gasket, install the fuel pump and torque bolts to 30-38 N·m (22-28 lb·ft).
4. Install any other components that were removed for this procedure.
5. Connect fuel inlet and outlet lines to the fuel pump and tighten.
6. Prime the fuel system before starting the engine.

(Rev. 2004) *All information subject to change without notice.*
6SE483 0401 Copyright © 2004 DETROIT DIESEL CORPORATION

CAUTION:

Diesel engine exhaust and some of its constituents are known to the State of California to cause cancer, birth defects, and other reproductive harm.

- ☐ **Always start and operate an engine in a well ventilated area.**
- ☐ **If operating an engine in an enclosed area, vent the exhaust to the outside.**
- ☐ **Do not modify or tamper with the exhaust system or emission control system.**

7. Start the engine and check for leaks.
8. Shut down the engine upon completion of tests.

 Copyright © 2004 DETROIT DIESEL CORPORATION

2.7.6 Installation of Former Air Compressor-Driven Fuel Pump

Perform the following steps for fuel pump installation:

NOTE:
New fittings have sealant already applied. If reusing fittings, coat the threads lightly with Loctite® Pipe Sealant, PT-7260, or equivalent, before installing. To prevent sealant from entering fuel system, do not apply it to the first two (2) threads of the fitting. Do not use Teflon tape or paste on the fittings.

1. If removed, install inlet and outlet fittings in the rear cover of the fuel pump.
2. Install drive coupling in drive hub of the fuel pump and affix a new gasket to the mounting flange of the pump.

NOTE:
When correctly positioned, the outlet fitting on the pump should be in approximately 8 o'clock position when viewed from the rear, and the drain opening in the pump body facing down.

3. Index the drive coupling with the drive hub on the end of the air compressor crankshaft and align the pump mounting bolt holes with those in the air compressor rear cover.
4. Seat the fuel pump squarely against the air compressor piloting the flange on the pump body in the opening in the rear cover of the compressor. Install three (3) fuel pump mounting bolts and torque them to 30-38 N·m (22-28 lb·ft).
5. Connect the fuel inlet and outlet lines to the fuel pump and tighten.
6. Prime engine fuel system before starting engine to ensure pump seal lubrication and prompt engine starting.

(Rev. 2004) *All information subject to change without notice.*
6SE483 0401 Copyright © 2004 DETROIT DIESEL CORPORATION

2.8 FUEL PUMP WITH ONE-PIECE DRIVE SHAFT AND HUB ASSEMBLY

An improved fuel pump replaced the former fuel pump, effective with July 1995 engine production. The improved and former pumps are similar, except that the improved pump has a one-piece drive shaft and hub assembly. See Figure 2-56. The former pump has a separate drive shaft and drive hub. See Figure 2-57. Former and improved pump assemblies are completely interchangeable. However, components of former and improved pump assemblies are not interchangeable.

The current fuel pump system consists of the following components:

- ☐ Barnes positive displacement type fuel pump with one-piece drive shaft and hub assembly
- ☐ Gear train mounting adaptor

NOTE:
Effective with engine serial number 06R0549855 built on October 19, 1999, gear case-mounted fuel pumps have a splined drive shaft and splined gear coupling assembly. See Figure 2-57. The former and current fuel pump and fuel pump drive assemblies are not interchangeable. Both current assemblies must be used together. Components of former and current pump assemblies and drive assemblies are not interchangeable.

 Copyright © 2004 DETROIT DIESEL CORPORATION

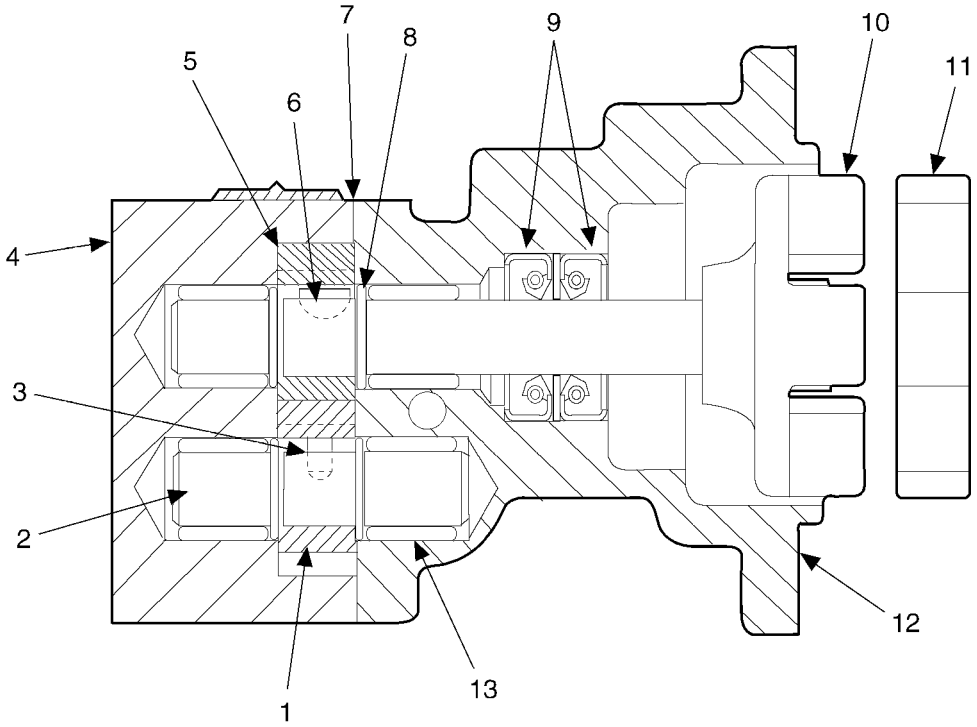

1. Driven Gear
2. Driven Shaft
3. Pin, Drive
4. Cover
5. Drive Gear
6. Key
7. Gasket
8. Snap Ring
9. Oil Seals
10. Drive Shaft and Hub Assembly
11. Coupling
12. Pump Body
13. Needle Bearing

Figure 2-56 Current Compressor-Mounted Fuel Pump Assembly with One-Piece Drive Shaft and Hub Assembly

(Rev. 2004) *All information subject to change without notice.*
6SE483 0401 Copyright © 2004 DETROIT DIESEL CORPORATION

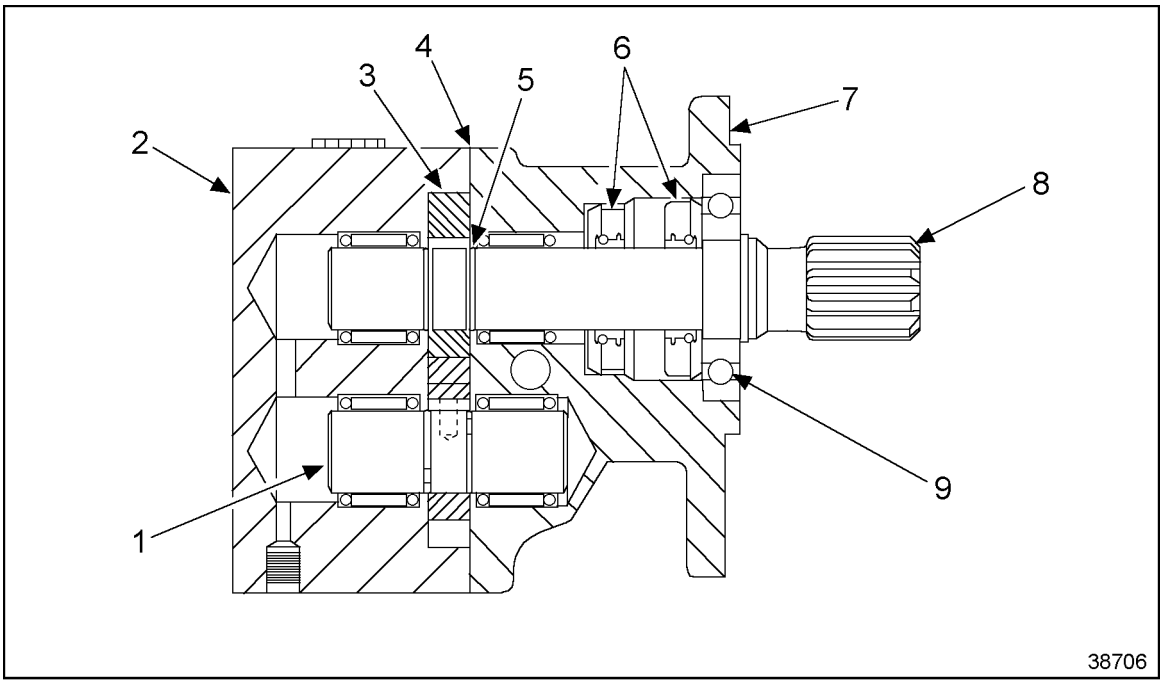

1. Driven Shaft
2. Cover
3. Drive Gear
4. Gasket
5. Snap Ring
6. Oil Seal
7. Pump Body
8. Spline Drive Shaft
9. Steel Cage Ball Bearing

Figure 2-57 Current Gear Case-Mounted Fuel Pump Assembly

 Copyright © 2004 DETROIT DIESEL CORPORATION

See Figure 2-58for the current positive displacement gear-type fuel pump is shown in the next illustration.

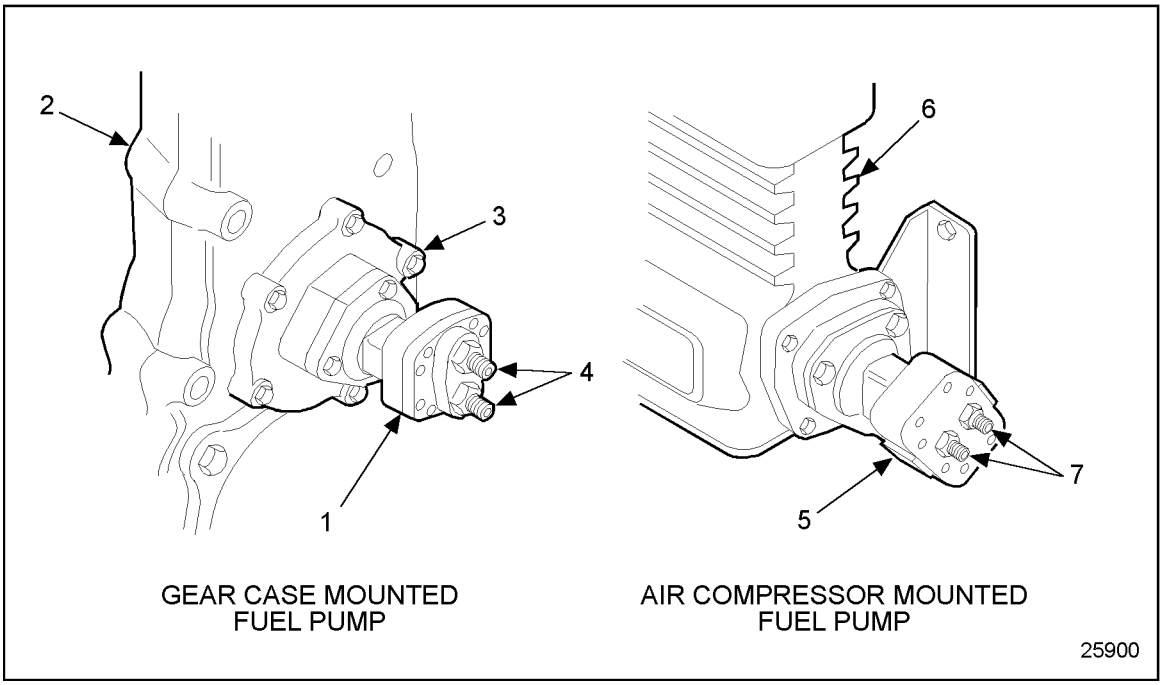

1. Gear Case-Mounted Fuel Pump Assembly
2. Gear Case Housing
3. Fuel Pump Drive Adaptor
4. Brass Fittings
5. Air Compressor-Mounted Fuel Pump
6. Air Compressor Assembly
7. Brass Fittings

Figure 2-58 Gear Case and Air Compressor-Mounted Fuel Pumps

(Rev. 2004) *All information subject to change without notice.*
6SE483 0401 Copyright © 2004 DETROIT DIESEL CORPORATION

The fuel pump transfers fuel from the supply tank to the fuel injectors. The pump circulates an excess supply of fuel through the injectors, which purges the air from the system and cools the injectors. The unused portion of fuel returns to the fuel tank by means of a fuel return line.

The fuel pump is either attached to a drive assembly mounted on the rear side of the gear case, or driven off of the rear of the air compressor. See Figure 2-58.

The fuel pump cover and body are positioned by two dowels. The dowels aid in maintaining alignment between the body, cover and shafts. The mating surfaces of the pump body and cover are perfectly flat ground surfaces. A gasket is used between the cover and body.

The fuel pump body is recessed to provide running space for the pump gears. Recesses are also provided at the inlet and outlet positions of the gears. The small relief valve vent (5) (see Figure 2-59) permits the fuel oil in the inlet side of the pump to lubricate the relief valve at its outer end. This eliminates the possibility of a hydrostatic lock which would render the relief valve inoperative. Pressurized fuel contacts the relief valve through the passage to the head of the relief valve (1) and provides for relief of excess discharge pressures. Fuel re-enters the inlet side of the pump through the passage to the head of the relief valve (6) when the discharge pressure is great enough to move the relief valve back from its seat. Part of the relief valve may be seen through the passage to the head of the relief valve (6). The gear teeth vent cavity (7) provides escape for the fuel oil that is squeezed out of the gear teeth as they mesh together on the discharge side of the pump. Otherwise, fuel trapped at the root of the teeth would tend to force the gears apart, resulting in undue wear on the gears, shafts, body, and cover. See Figure 2-59.

 Copyright © 2004 DETROIT DIESEL CORPORATION

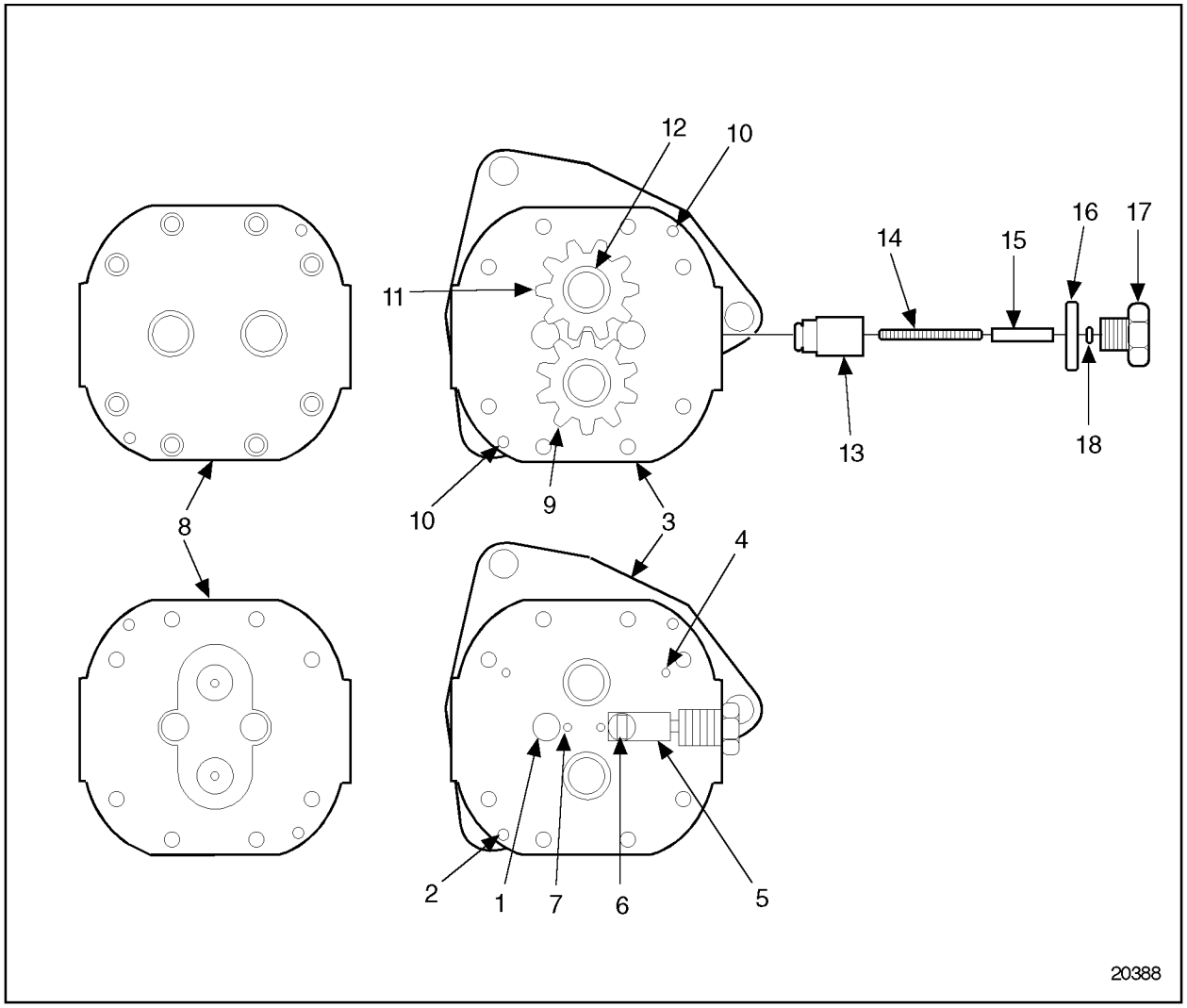

1. Passage to Head of Relief Valve, Pressure Side
2. Dowel Hole
3. Body
4. Oil Seal Vent to Suction Side
5. Relief Valve Vent to Suction Side
6. Passage to Head of Relief Valve, Suction Side
7. Gear Teeth Vent Cavity
8. Cover
9. Driven Gear
10. Dowel
11. Drive Gear
12. Drive Shaft Gear
13. Relief Valve
14. Spring
15. Pin
16. O-ring
17. Plug
18. Spacer

Figure 2-59 Fuel Pump

(Rev. 2004) *All information subject to change without notice.*
6SE483 0401 Copyright © 2004 DETROIT DIESEL CORPORATION

Two oil seals are pressed into the bore in the flanged side of the pump body to retain the fuel oil in the pump and the lubricating oil in the fuel pump drive and gear case. The oil seal vent (4) (see Figure 2-59) serves as a vent passageway in the body, between the inner oil seal and the suction side of the pump, which prevents building up any fuel oil pressure around the shaft ahead of the inner seal. The oil seals are installed with the lips of the seals facing each other. See Figure 2-60.

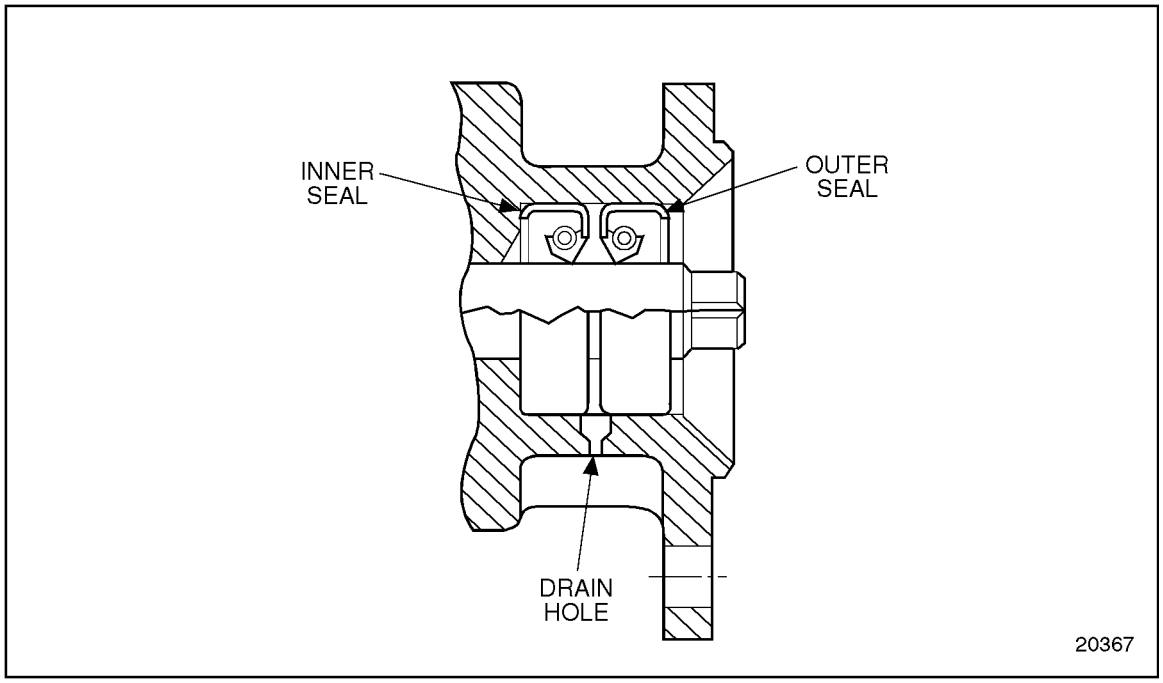

Figure 2-60 Fuel Pump Oil Seal Arrangement

Some fuel oil seepage by the fuel pump can be expected with a running engine and immediately after an engine has been shut down. This is especially true with a new fuel pump, new pump seals, or both, as the seals have not yet conformed to the pump drive shaft. Fuel pump seals will always allow some seepage. A drain hole in the pump body is provided to prevent fuel oil from being retained between the seals. Excessive fuel retention between the seals could provide enough pressure to cause engine oil dilution by fuel; therefore, drainage of the excess fuel oil is mandatory. However, if leakage exceeds one drop per minute, replace the seals. The drain hole should be checked for plugging at normal scheduled maintenance.

A spring-loaded relief valve incorporated in the pump body normally remains in the closed position, operating only when pressure on the outlet side (to the fuel filter) reaches approximately 448 kPa (65 lb/in.^{2}).

In operation, fuel enters the pump on the suction side and fills the space between the gear teeth that are exposed at that instant. The gear teeth then carry fuel oil to the discharge side of the pump and as the gear teeth mesh in the center of the pump, the fuel is forced out the outlet cavity. Since this is a continuous cycle and fuel is continually being forced into the outlet cavity, the fuel flows from the outlet cavity into the fuel lines and through the engine fuel system under pressure.

 Copyright © 2004 DETROIT DIESEL CORPORATION

The pressure relief valve relieves the discharge pressure by bypassing the fuel from the outlet side of the pump to the inlet side when the discharge pressure reaches approximately 448 to 517 kPa (65 to 75 lb/in.^{2}).

The fuel pump should maintain the fuel pressure as listed in Table 2-2.

Fuel System Parameter Limits	Operating Limits at 2100 r/min	Operating Limits at 1800 r/min
Fuel pressure at secondary filter outlet - kPa (lb/in.^{2}):		
Normal with 2.03 mm (0.080 in.) restriction	517 (75)	517 (75)
Minimum	345 (50)	345 (50)
Fuel spill minimum at no-load - L/min (gal/min):		
Normal with 2.03 mm (0.080 in.) restriction	4.9 (1.3)	4.1 (1.0)
Fuel pump suction at pump inlet, maximum - kPa (in. Hg):		
Clean system	20 (6)	20 (6)
Dirty system	41 (12)	41 (12)

Table 2-2 Series 60 Engine Fuel System Parameters

(Rev. 2004) *All information subject to change without notice.*
6SE483 0401 Copyright © 2004 DETROIT DIESEL CORPORATION

2.8.1 Repair or Replacement of Fuel Pump

To determine if repair or replacement of the fuel pump is necessary. See Figure 2-61.

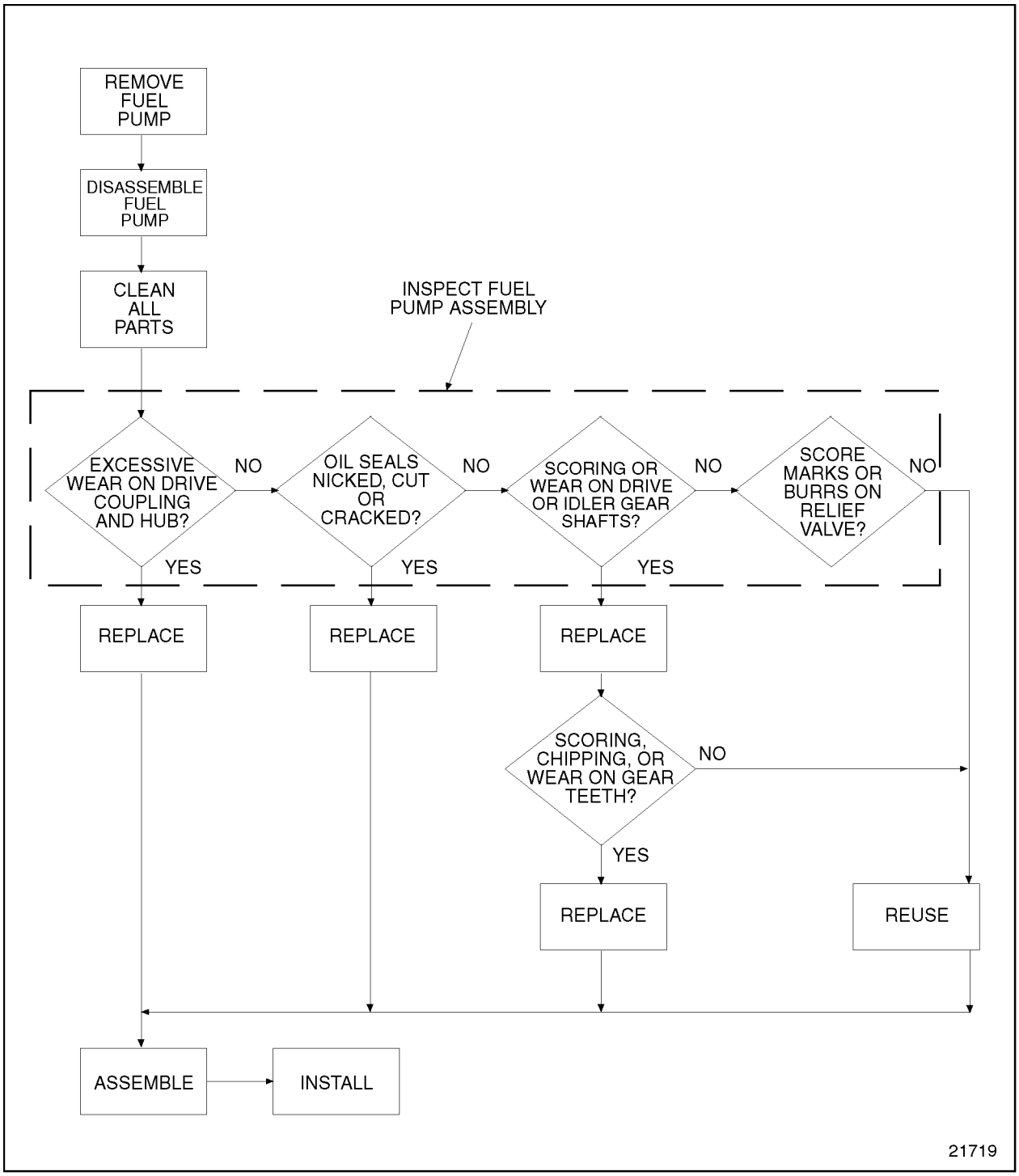

Figure 2-61 Flowchart for Repair or Replacement of Fuel Pump

 Copyright © 2004 DETROIT DIESEL CORPORATION

2.8.2 Removal of Fuel Pump (One-piece Drive Shaft)

Perform the following steps for fuel pump removal:

1. Disconnect the fuel lines from the inlet and outlet openings of the fuel pump.
2. Remove the three fuel pump attaching bolts and withdraw the pump from the mounting adaptor on the gear case or air compressor.
3. Check the drive coupling and, if broken or worn, replace it with a new coupling.

2.8.3 Disassembly of Fuel Pump (One-piece Drive Shaft)

Perform the following steps for fuel pump disassembly:

1. With the fuel pump removed from the engine, clamp the pump in a bench vise equipped with soft jaws.
2. Remove fuel inlet and outlet fittings from fuel pump cover.
3. Remove the pump from the vise and position pump on holding fixture J 38767-1, hub side down. See Figure 2-62. Clamp the holding fixture in the vise.

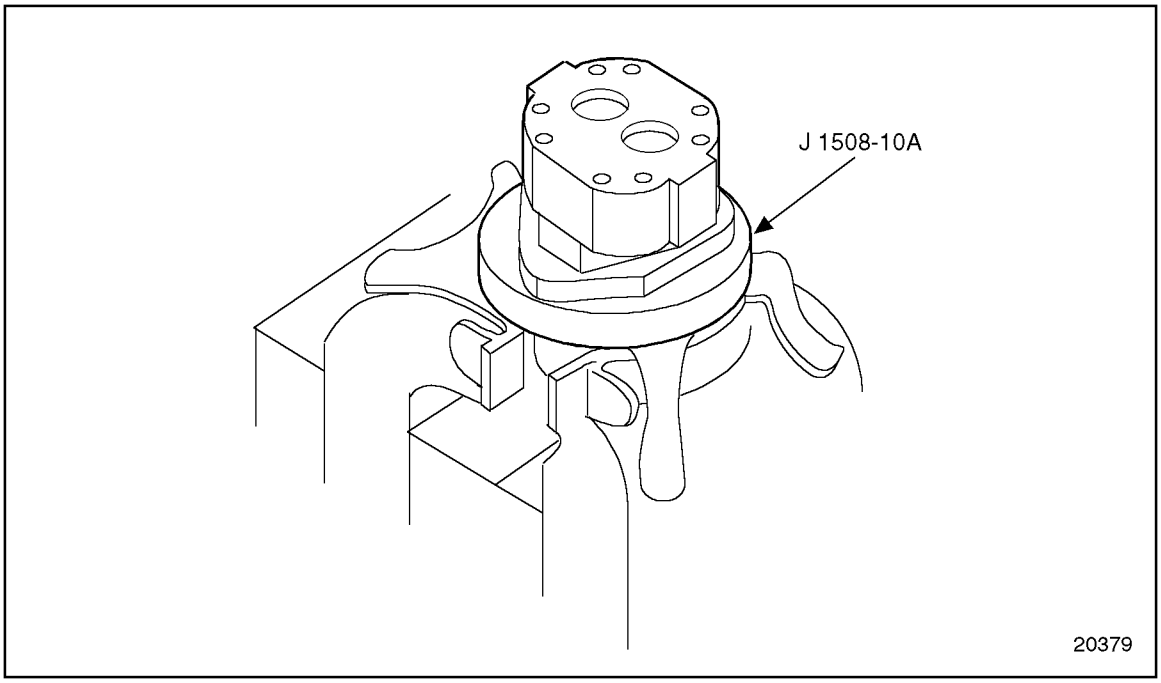

Figure 2-62 Fuel Pump Holding Fixture

(Rev. 2004) *All information subject to change without notice.*
6SE483 0401 Copyright © 2004 DETROIT DIESEL CORPORATION

4. Using a No. E-8 torx socket, J 25359-11, remove eight (8) bolts securing the pump cover to body.

NOTE:
Note the color of the foil gasket, gold or silver. If the pump is reassembled, the same color foil gasket must be used. The gaskets are of different thickness and establish correct internal clearance.

5. Separate the pump cover from the body by lifting it off the shafts and dowels. Remove and discard the foil gasket between the cover and body.

NOTE:
When the drive shaft is removed from the pump, the oil seals must be replaced.

6. Withdraw the driven shaft and gear and the drive shaft and gear assemblies from the pump body.
7. Remove the C-clips, and key from the drive shaft. Remove the C-clips and pin from the driven shaft.
8. Remove the gears from the shafts.

NOTE:
When the drive shaft is removed, the drive shaft needle bearing assembly in the pump body must also be removed to allow installation of the oil seal protector used during reassembly.

 Copyright © 2004 DETROIT DIESEL CORPORATION

9. Use needle bearing remover, J 33853, with slide hammer and remove the needle bearing assemblies from the pump body and cover. See Figure 2-63.

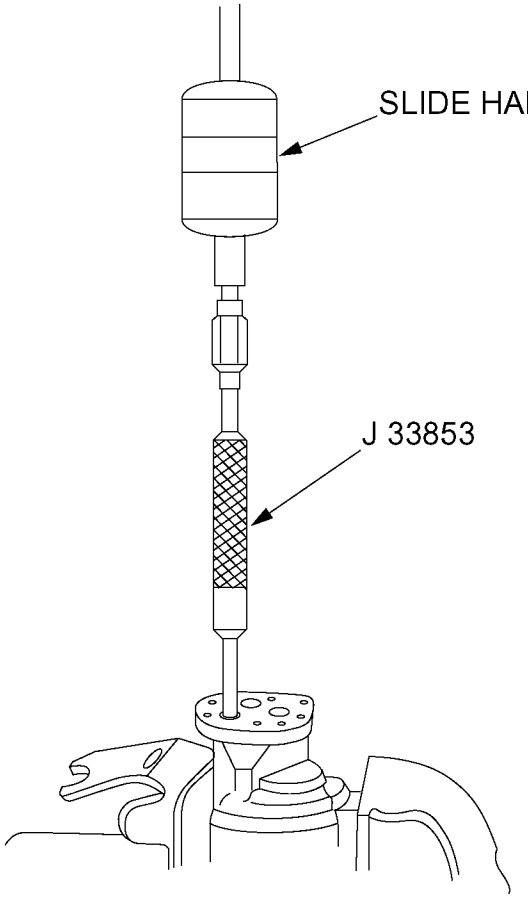

Figure 2-63 Needle Bearing Assembly Removal

(Rev. 2004) *All information subject to change without notice.*
6SE483 0401 Copyright © 2004 DETROIT DIESEL CORPORATION

10. Position pump on fixture, J 38767-1, and insert the lip of seal remover, J 1508-13, between the inner and outer oil seals. Tap the tool with a light hammer to drive the outer seal out of the pump body. See Figure 2-64. Discard the outer seal.

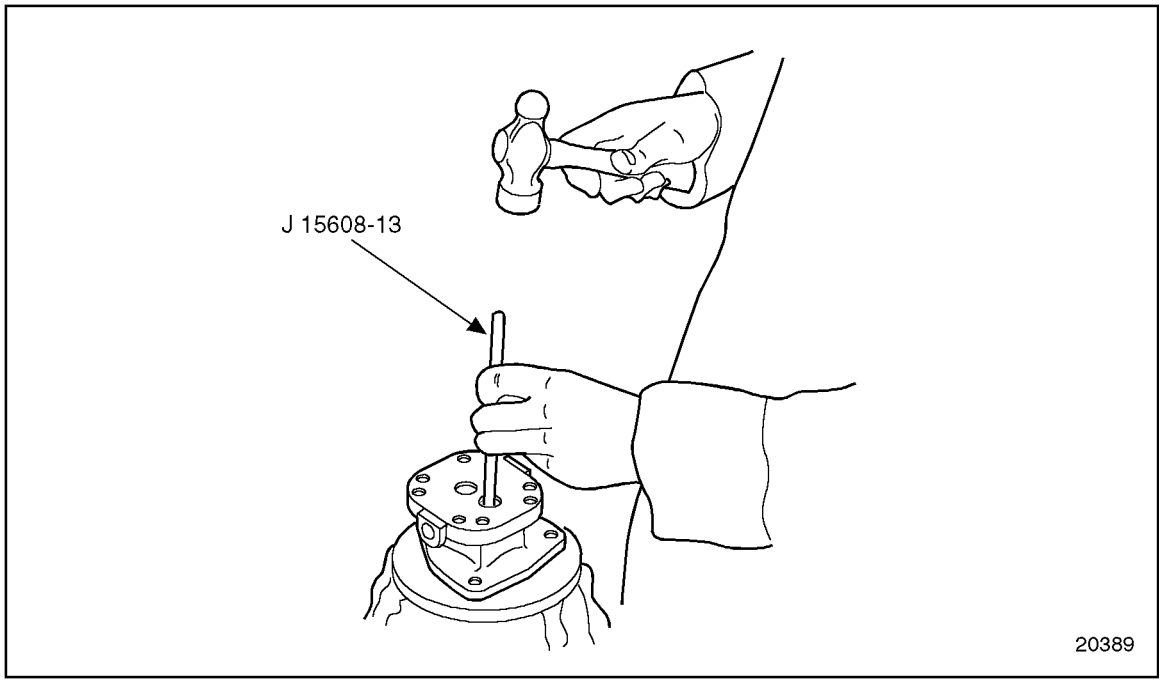

Figure 2-64 Oil Seal Removal

11. Repeat the process, removing the inner seal by placing the tool lip against the inside of the seal case. Discard the inner seal.
12. Unscrew and remove the relief valve cover and remove the relief valve plunger, spring and pin from the bore.
13. Remove the spacer from the relief valve cover.
14. Remove and discard the O-ring seal under the head of the cover.

 Copyright © 2004 DETROIT DIESEL CORPORATION

2.8.3.1 Cleaning and Inspection of Fuel Pump (One-piece Drive Shaft)

Perform the following steps to clean and inspect the fuel pump parts:

1. Clean all parts with clean fuel oil before inspection.

CAUTION:

To avoid injury from flying debris when using compressed air, wear adequate eye protection (face shield or safety goggles) and do not exceed 40 psi (276 kPa) air pressure.

2. Dry the parts with compressed air.
3. Visually inspect the drive coupling for wear or damage.
   [a] If wear or damage is found, replace the drive coupling.
   [b] If no wear or damage is found, reuse the drive coupling.

NOTE:
Oil seals, once removed, must be discarded and replaced with new seals. Oil seals must be removed whenever the fuel pump drive shaft is withdrawn.

4. Visually inspect the drive shaft and hub assembly and idler gear shaft for scoring or wear.
   [a] If scoring or wear is found, replace the drive shaft and hub assembly and idler gear shaft.
   [b] If no scoring or wear is found, reuse the drive shaft and hub assembly and idler gear shafts.
5. Visually check the gear teeth for scoring, chipping or wear.
   [a] If gear teeth are scored, chipped or worn, replace the parts as necessary.
   [b] If gear teeth are not scored, chipped or worn, reuse the parts.
6. Visually inspect the relief valve. The valve must be free of score marks and burrs.
   [a] If the relief valve is scored and cannot be cleaned up with fine emery cloth, replace the relief valve.
   [b] If the relief valve is not damaged, reuse the part.

(Rev. 2004) *All information subject to change without notice.*
6SE483 0401 Copyright © 2004 DETROIT DIESEL CORPORATION

2.8.4 Assembly of Fuel Pump (One-piece Drive Shaft)

Perform the following steps for fuel pump assembly:

1. Lubricate the lips of a new inner oil seal and pilot of oil seal installer, J 1508-8, with a light film of clean engine oil.
2. Place the oil seal adaptor, J 34158, on the pilot, J 1508-8, with the wide end of the adaptor against the handle.
3. Place inner oil seal on the pilot, J 1508-8, with seal case against the adaptor.
4. Support the pump body on wood blocks, hub side up, and insert the pilot into the shaft bore positioning the seal on the bore. Use a light hammer and drive the inner seal into the bore until the adaptor is bottomed against the pump body. See Figure 2-65.

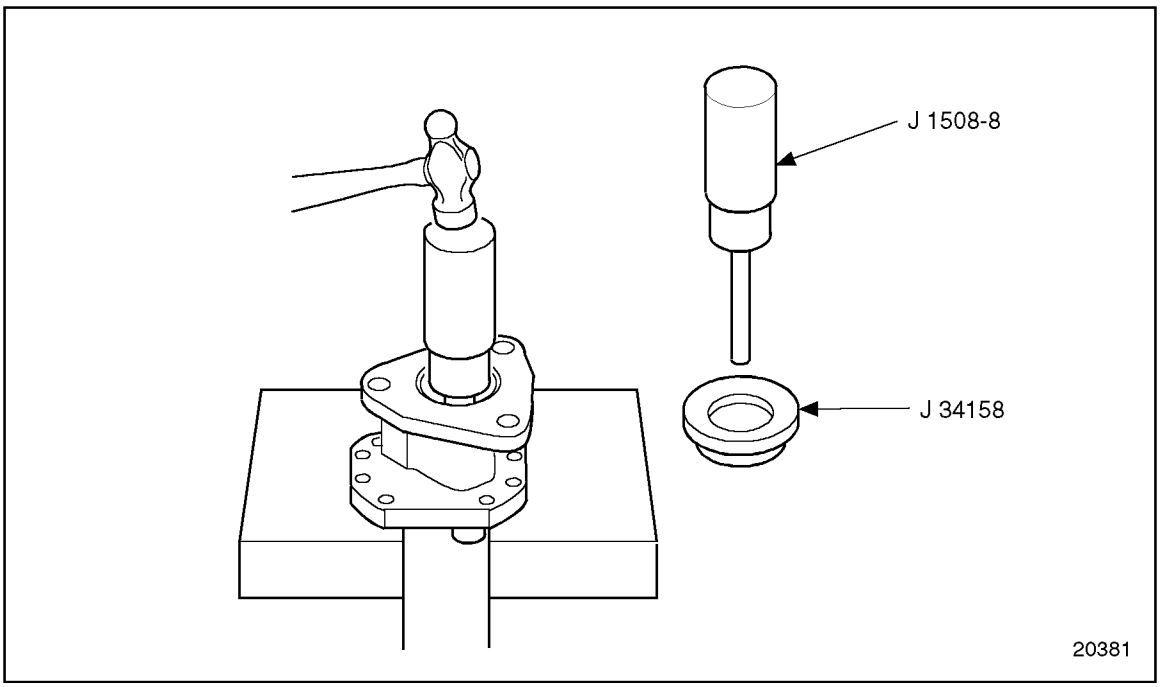

Figure 2-65 Installing Inner Oil Seal

 Copyright © 2004 DETROIT DIESEL CORPORATION

5. Remove the installer J 1508-8 and pilot J 34158 and place the narrow end against the installer handle. See Figure 2-66.

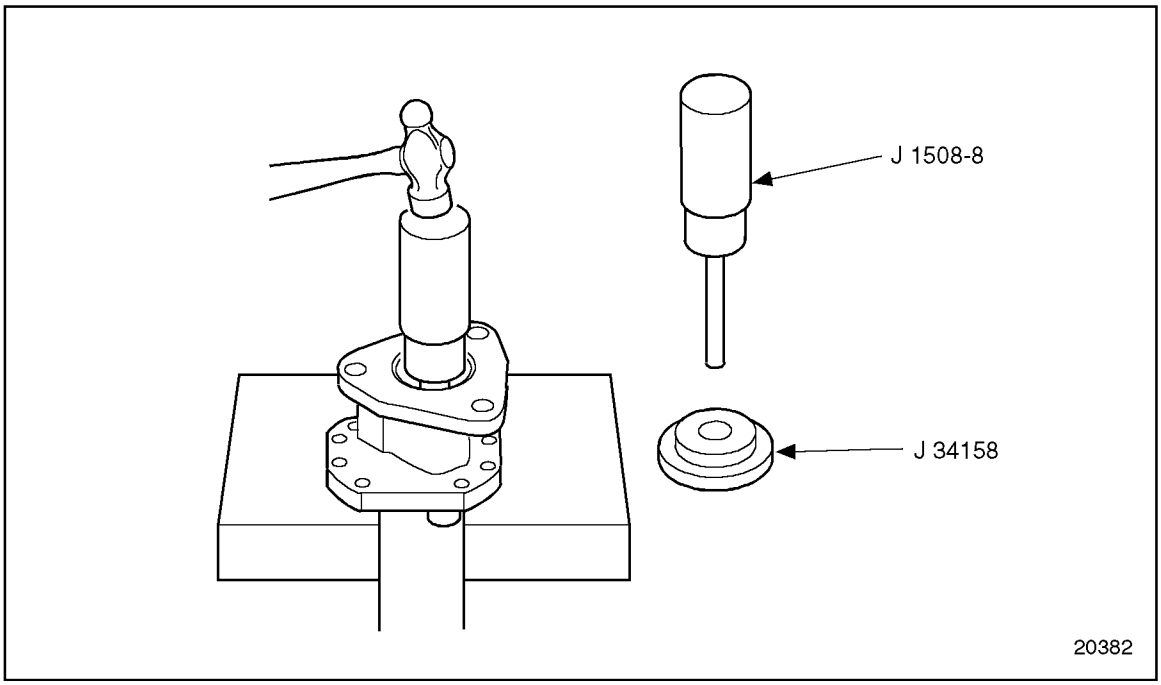

Figure 2-66 Installing Outer Oil Seal

6. Place a new outer seal on J 1508-8 with J 34158, faced away from the adaptor.
7. Carefully reinsert the installer pilot (J 1508-8) through the inner seal and position the outer seal on the bore. Use a light hammer and drive the seal into the bore until the adaptor is bottomed against the pump body.

(Rev. 2004) *All information subject to change without notice.*
6SE483 0401 Copyright © 2004 DETROIT DIESEL CORPORATION

8. Install seal protector, J 33021-A, on drive shaft and hub assembly and install through seal. Remove seal protector. See Figure 2-67.

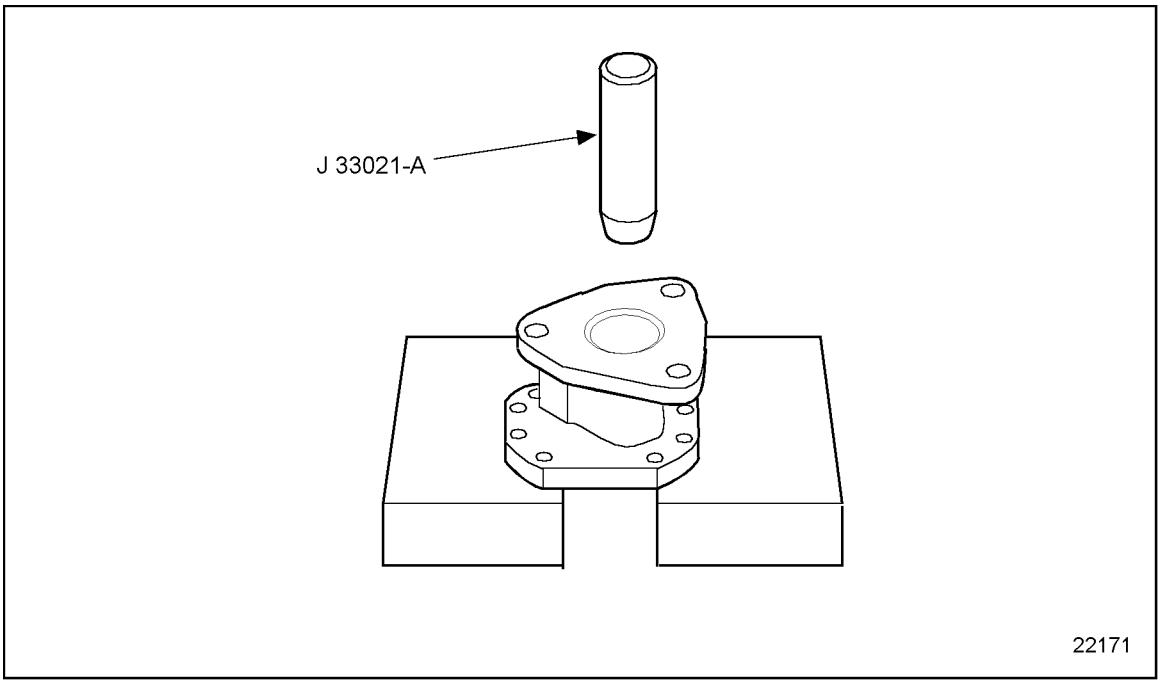

Figure 2-67 Seal Protector Installation

NOTE:
The bearing numbers should always be against the tool during installation.

 Copyright © 2004 DETROIT DIESEL CORPORATION

9. Install drive shaft needle bearings, using J 38767-8 part of J 38767–A. The new tool permits bearing installation over drive shaft. Tool J 33854 can and should be used to install the other three bearings as shown. See Figure 2-68(this tool will support the bearing cages).

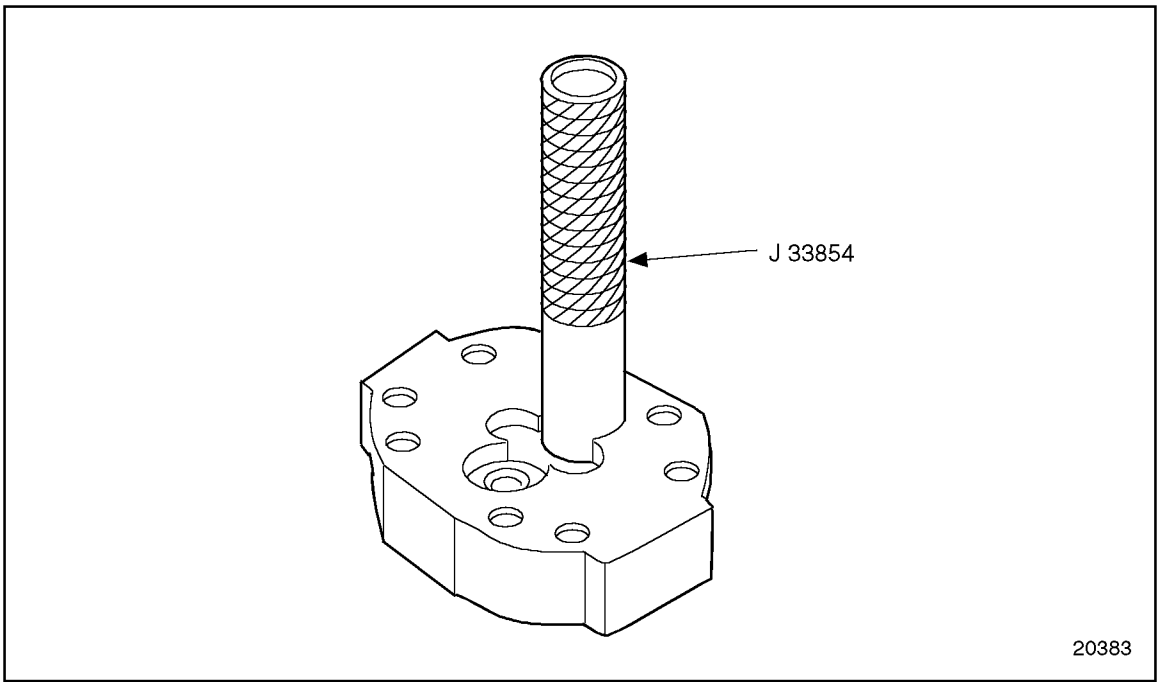

Figure 2-68 Drive Shaft Bearing Installation

10. Install C-clip, key, gear, the final C-clip on drive shaft.

NOTE:
Hold the shaft in position with the gear against the pump body while handling to ensure the drive hub C-clip grooves do not contact the oil seals.

(Rev. 2004) *All information subject to change without notice.*
6SE483 0401 Copyright © 2004 DETROIT DIESEL CORPORATION

11. Position the pump body on the holding fixture, J 38767-1, hub side down.

NOTE:
When assembling pump, always use the same color foil gasket that was originally installed. Required gaskets for gear driven pump are listed in Table 2-3. Required gaskets for air compressor-driven pumps are listed in Table 2-4. If the color is unknown, measure the depth of the gear cavity in the pump cover and install the required gasket.

Gear Cavity Depth	Color Gasket Used
0.24885 - 0.24905 in. (6.320-6.325 mm)	Blue
0.24906 - 0.24925 in. (6.326-6.331 mm)	Amber
0.24935 - 0.24955 in. (6.333-6.338 mm)	Gold
0.24956 - 0.24975 in. (6.339-6.344 mm)	Silver

Table 2-3 Gasket Color vs. Gear Cavity Depth Chart (Gear Driven Pumps)

Gear Cavity Depth	Color Gasket Used
0.37385-0.37405 in. (9.495-9.500 mm)	Blue
0.37406-0.37425 in. (9.501-9.505 mm)	Amber
0.37435-0.37455 in. (9.508-9.513 mm)	Gold
0.37456-0.37475 in. (9.514-9.518 mm)	Silver

Table 2-4 Gasket Color vs. Gear Cavity Depth Chart (Air Compressor-Driven Pumps)

 Copyright © 2004 DETROIT DIESEL CORPORATION

12. Place a new foil gasket on the face of the pump. With a finger tip, carefully smooth the gasket against the face to ensure there are no wrinkles, creases, or bubbles.

    [a] If wrinkles, creases, or bubbles are present, and they cannot be removed with the finger, remove the gasket and repeat the procedure.

13. Assemble the driven gear shaft assembly by installing the C-clip on the shaft, and then installing the square-headed location pin in the hole in the shaft. Next, slide the driven gear on the shaft, aligning the pin on the shaft with the slot in the gear. Finally, install the C-clip on the shaft to hold the gear in place.

14. Carefully insert the driven shaft and gear assembly in the needle bearing in the pump body.

NOTE:
When positioning the cover, the fuel inlet (stamped on cover) must be on the same side as the relief valve bore in the pump body.

15. Position the needle bearing assemblies in the pump cover on the ends of the driven and drive shafts and slide the cover against the pump body.

16. Install eight cover retaining bolts. Use No. E-8 torx socket, J 25359-11, and torque bolts to 12-15 N·m (9-11 lb·ft).

NOTE:
As the outside of the pump body and cover are not machined and to prevent possible distortion, ensure that only the pump cover is gripped and that the vise jaws do not contact both body and cover.

17. Clamp the fuel pump cover in a soft-jawed vise with the relief valve bore in the pump body facing up.

18. Lubricate the relief plunger with clean engine oil and insert the plunger into the bore with the hollow end up. Insert the relief spring inside the plunger and the pin inside the spring.

19. Install the spacer in the bottom of the spring seat in the plug and install a new O-ring seal under the head of the plug. Thread the plug into the pump body and torque to 8-14 N·m (6-10 lb·ft).

20. Place the pump assembly on a bench, hub side up. Install the coupling onto the hub.

21. Install fuel inlet and outlet fittings in the pump cover.

(Rev. 2004) *All information subject to change without notice.*
6SE483 0401 Copyright © 2004 DETROIT DIESEL CORPORATION

2.8.5 Installation of Gear Train-Driven Fuel Pump (One-piece Drive Shaft)

Install the fuel pump as follows:

NOTICE:
It may be necessary to use a brass hammer or fiber mallet to seat the drive assembly. Be careful not to damage the O-ring on installation.

NOTE:
Effective with engine serial number 06R0549855 built on October 19, 1999, gear case-mounted fuel pumps have a splined drive shaft and splined gear coupling assembly. See Figure 2-57. The former and current fuel pump and fuel pump drive assemblies are not interchangeable. Both current assemblies must be used together. Components of former and current pump assemblies and drive assemblies are not interchangeable.

1. Using a new O-ring seal, install the drive assembly on the gear case.
2. Install the fuel pump drive bolts and torque to 30-34 N·m (22-25 lb·ft) using the torque pattern shown. See Figure 2-69.

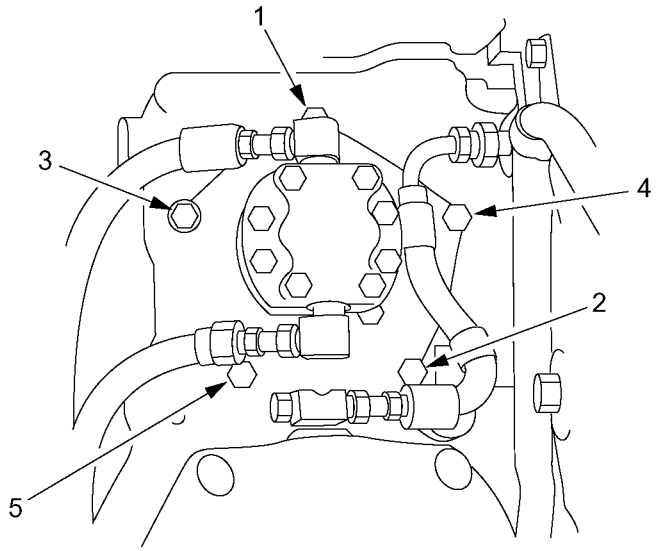

TORQUE SPECIFICATION
30-34 N·M (22-25 LB·FT)

20393

Figure 2-69 Fuel Pump Drive Retaining Bolt Torque Sequence

 Copyright © 2004 DETROIT DIESEL CORPORATION

3. Using a new gasket, install the fuel pump and torque bolts to 30-38 N·m (22-28 lb·ft).
4. Install any other components that were removed for this procedure.

CAUTION:

To avoid injury before starting and running the engine, ensure the vehicle is parked on a level surface, parking brake is set, and the wheels are blocked.

CAUTION:

Diesel engine exhaust and some of its constituents are known to the State of California to cause cancer, birth defects, and other reproductive harm.

- ☐ **Always start and operate an engine in a well ventilated area.**
- ☐ **If operating an engine in an enclosed area, vent the exhaust to the outside.**
- ☐ **Do not modify or tamper with the exhaust system or emission control system.**

5. Reconnect fuel inlet and outlet hoses, prime the fuel system, start the engine, and check for leaks.
6. Shut down engine upon completion.

(Rev. 2004) *All information subject to change without notice.*
6SE483 0401 Copyright © 2004 DETROIT DIESEL CORPORATION

2.8.6 Installation of Air Compressor-Driven Fuel Pump (One-piece Drive Shaft)

Perform the following steps for air compressor-driven fuel pump installation:

NOTE:
New fittings have sealant already applied. If reusing fittings, coat the threads lightly with Loctite® Pipe Sealant, PT-7260, or equivalent before installing. To prevent sealant from entering fuel system, do not apply it to the first two (2) threads of the fitting. Do not use teflon tape or paste on the fittings.

1. If removed, install inlet and outlet fittings in the rear cover of the fuel pump.
2. Install drive coupling in drive hub of the fuel pump and affix a new gasket to the mounting flange of the pump.

NOTE:
When correctly positioned, the outlet fitting on the pump should be in approximately the 8 o'clock position when viewed from the rear, and the drain opening in the pump body facing down.

3. Index the drive coupling with the drive hub on the end of the air compressor crankshaft and align the pump mounting bolt holes with those in the air compressor rear cover.
4. Seat the fuel pump squarely against the air compressor. Install three (3) fuel pump mounting bolts and torque them to 30-38 N·m (22-28 lb·ft).
5. Connect the fuel inlet and outlet lines to the fuel pump and tighten.
6. Prime the fuel system before starting engine.
7. Refer to section 2.8.5 for the exhaust caution before preceeding. Start and run the engine. Visually observe fuel pump for any leaks. Repair as necessary.
8. Shut down engine upon completion of test.

 Copyright © 2004 DETROIT DIESEL CORPORATION

2.9 FUEL PUMP DRIVE

On certain Series 60 engines, the fuel pump is mounted on a fuel pump drive assembly. The fuel pump drive assembly is mounted to the gear case with five bolts. If installed on vehicle engines, the fuel pump drive assembly is located just above the air compressor drive assembly on the intake (left) side of the engine. See Figure 2-70.

NOTE:
Effective with engine serial number 06R0549855 built on October 19, 1999, gear case mounted fuel pumps have a splined drive shaft and splined gear coupling assembly, see Figure 2-71. The former and current fuel pump drive assemblies are not interchangeable. Both current assemblies must be used together. Components of former and current pump assemblies and drive assemblies are not interchangeable.

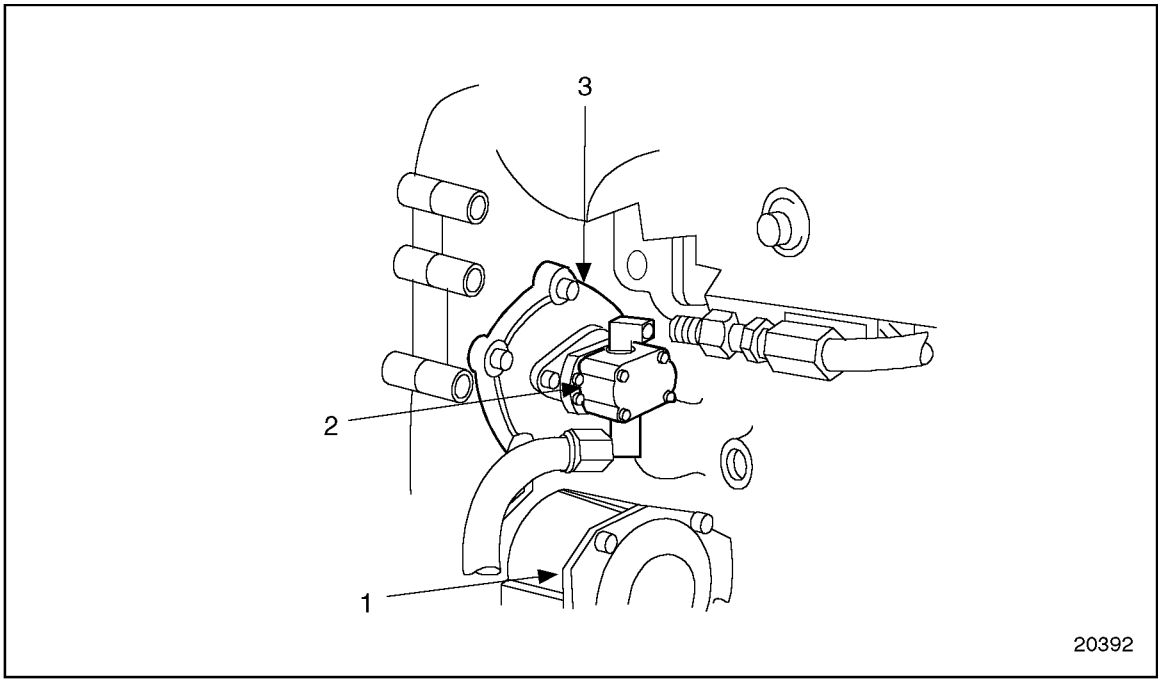

1. Air Compressor Drive Assembly
2. Fuel Pump
3. Fuel Pump Drive

Figure 2-70 Fuel Pump Drive Location

(Rev. 2004) *All information subject to change without notice.*
6SE483 0401 Copyright © 2004 DETROIT DIESEL CORPORATION

The fuel pump drive assembly consists of an aluminum housing, a helical gear driven off the bull gear, a drive shaft supported in the middle by a double-row ball bearing, and a forked hub that mates with a drive coupling. The fuel pump drive is supplied as an assembly, so components are not serviced. The drive gear and hub are pressed onto the drive shaft. A rubber O-ring located in a groove machined into the mounting surface of the drive is used to seal the fuel pump assembly to the gear case. An internal-type snap ring is fitted to a groove in the fuel pump drive housing to retain the bearing and shaft. see Figure 2-71

NOTE:
Effective with engine serial number 06R0549855 built on October 19, 1999, gear case mounted fuel pumps have a splined drive shaft and splined gear coupling assembly, see Figure 2-71. The former and current fuel pump drive assemblies are not interchangeable. Both current assemblies must be used together. Components of former and current pump assemblies and drive assemblies are not interchangeable.

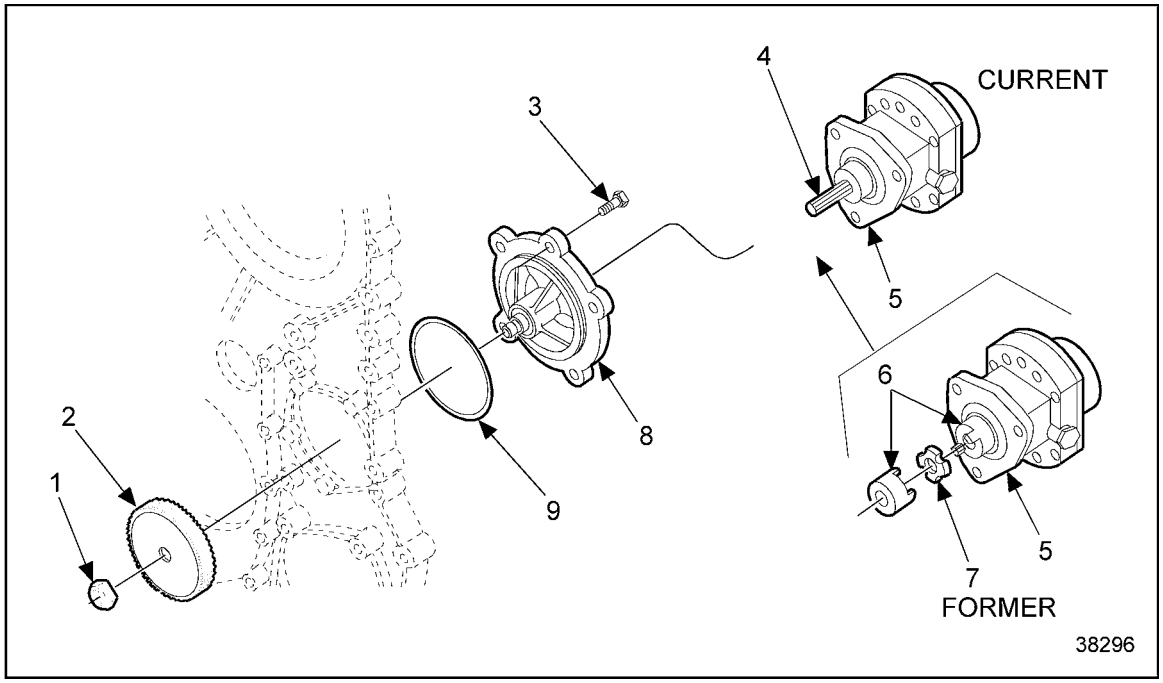

1. Nut
2. Gear
3. Bolt
4. Splined Shaft
5. Fuel Pump
6. Hub
7. Coupling
8. Fuel Pump Drive Assembly
9. O-ring

Figure 2-71 Current and Former Fuel Pumps

The coupling between the fuel pump and fuel pump drive hubs is plastic, and acts as a shock absorber in the fuel pump drive line.

 Copyright © 2004 DETROIT DIESEL CORPORATION

2.9.1 Lubrication of Fuel Pump Drive Bearing

The fuel pump drive bearing is lubricated by engine oil splash-fed by the gears rotating in the gear case. This oil feeds the bearing and drive shaft through a hole in the fuel pump drive housing.

2.9.2 Removing Fuel Pump Drive Assembly

Remove the fuel pump drive assembly as follows:

1. Remove the bolts retaining the assembly to the gear case.

NOTICE:
Failure to remove the fuel pump drive assembly by pulling it straight may damage the O-ring.

2. Remove the fuel pump drive assembly by pulling it straight out of the gear case.

2.9.2.1 Clean the Fuel Pump Drive Assembly

Clean the fuel pump drive assembly as follows:

1. Clean the mating surfaces of the fuel pump drive assembly and gear case with fuel oil.

⚠ CAUTION:
To avoid injury from flying debris when using compressed air, wear adequate eye protection (face shield or safety goggles) and do not exceed 40 psi (276 kPa) air pressure.

2. Dry the fuel pump drive assembly with compressed air.

2.9.2.2 Inspection of Fuel Pump Drive Assembly

Perform the following to inspect the fuel pump drive assembly:

1. The fuel pump drive assembly is nonserviceable if the bearing is worn or scored. Replace the fuel pump drive assembly.

(Rev. 2004) *All information subject to change without notice.*
6SE483 0401 Copyright © 2004 DETROIT DIESEL CORPORATION

2.9.3 Installation of Fuel Pump Drive Assembly

Perform the following steps to install the fuel pump drive assembly:

1. Replace the O-ring as necessary.
2. Lubricate the O-ring with a light coating of petroleum jelly.
3. Install the O-ring on the fuel pump housing.
4. Install the drive assembly on the gear case.

NOTE:
It may be necessary to use a brass hammer or fiber mallet to seat the drive assembly. Be careful not to damage the O-ring during installation.

5. Install the fuel drive bolts and torque to 30-34 N·m (22-25 lb·ft) using the torque pattern shown. See Figure 2-72.

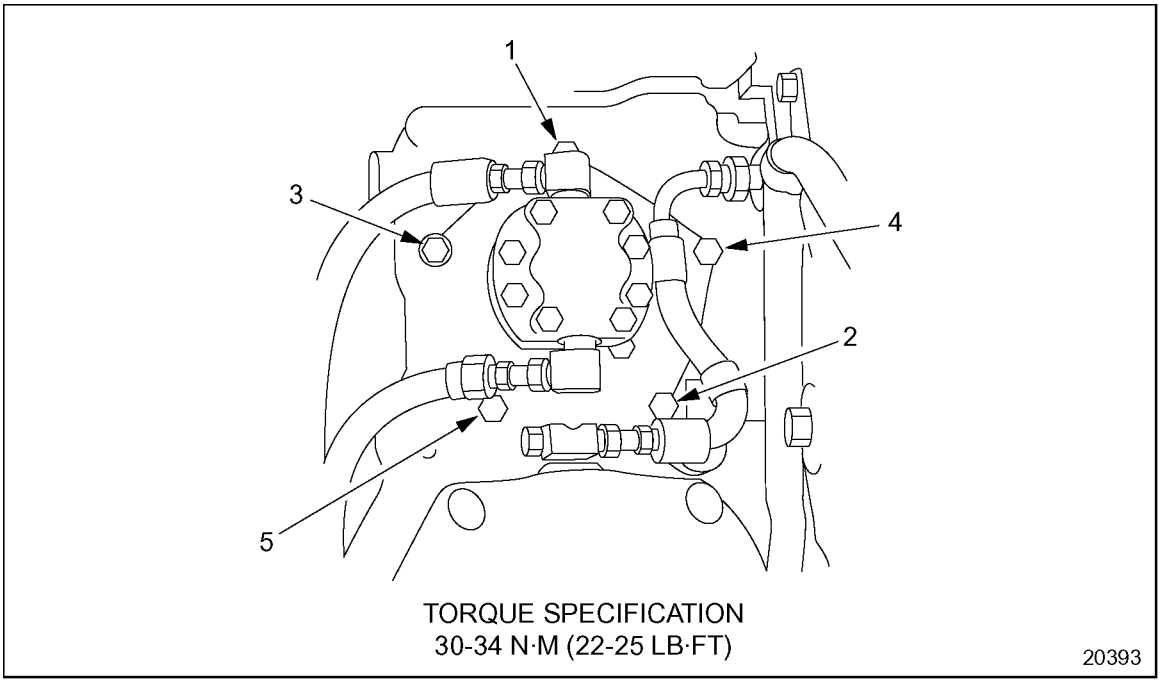

Figure 2-72 Fuel Pump Drive Assembly Torque Sequence

6. Install the fuel pump. Refer to section 2.8.5for gear train-driven fuel pump. Refer to section 2.8.6 for air compressor-driven fuel pump.
7. Install any other components that were removed for this procedure.

 Copyright © 2004 DETROIT DIESEL CORPORATION

CAUTION:

To avoid injury before starting and running the engine, ensure the vehicle is parked on a level surface, parking brake is set, and the wheels are blocked.

CAUTION:

Diesel engine exhaust and some of its constituents are known to the State of California to cause cancer, birth defects, and other reproductive harm.

- ☐ **Always start and operate an engine in a well ventilated area.**
- ☐ **If operating an engine in an enclosed area, vent the exhaust to the outside.**
- ☐ **Do not modify or tamper with the exhaust system or emission control system.**

8. Start the engine and check for leaks. If leaks are found. Repair as necessary.
9. Shut down the engine upon completion of inspection.

(Rev. 2004) *All information subject to change without notice.*
6SE483 0401 Copyright © 2004 DETROIT DIESEL CORPORATION

2.10 DIESEL FUEL FILTERS (SPIN-ON)

Two spin-on type filters are used on the Series 60 engine. The first in the fuel flow is a strainer, and the second is a filter. Although they are not marked as such, the threaded sleeves that accept the cartridges are different sizes to prevent mismatching. The primary filter has a 1 in. x 12 thread. The secondary filter has a 13/16 in. x 12 thread. The word "Primary" or "Secondary" is cast onto the top of the respective adaptor. See Figure 2-73.

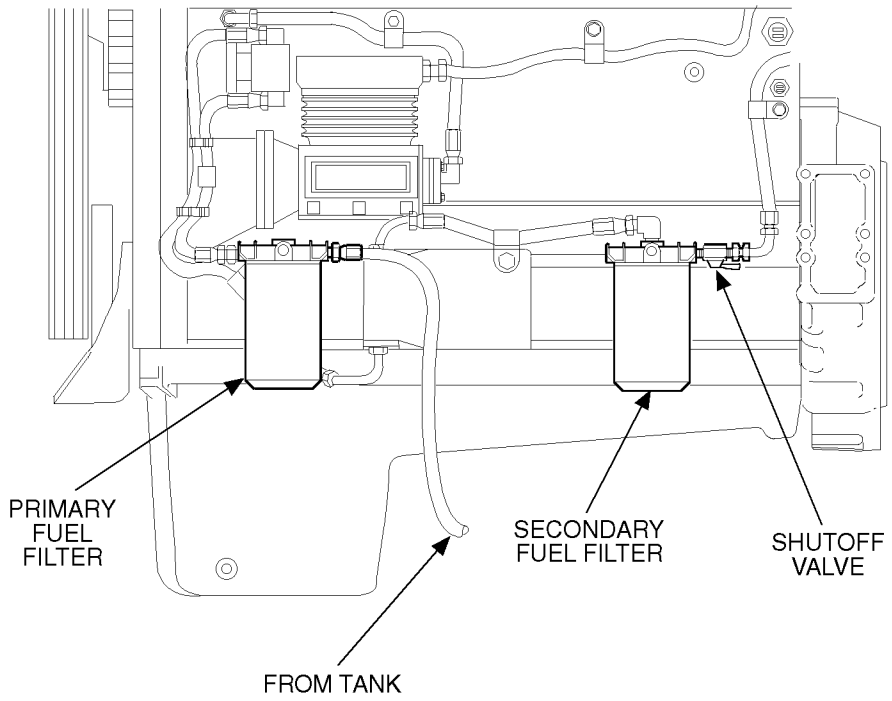

Figure 2-73 Fuel Filters

 Copyright © 2004 DETROIT DIESEL CORPORATION

For marine fuel filter information, refer to section 2.12 for Sea Pro 150/300 or refer to section 2.13 for Sea Pro 152.

The spin-on filter cartridges consist of a shell, element, and gasket combined into a unitized replacement assembly. No separate springs or seats are required to support the filters. Effective with 1993 engine production, an optional fuel filter and water separator assembly may be installed in place of the strainer. A fuel shutoff valve or check valve may be installed on the outlet side of the secondary filter.

NOTICE:
Do not overtorque the external threaded end of the shutoff valve when installing it in the fuel filter adaptor. The connection must be tight enough to prevent leakage but not tightened to the point where the adaptor will crack.

The fuel filter adaptors are attached to the block with two bolts each. Torque these bolts to 58-73 N·m (43-54 lb·ft).

The fuel filter system consists of the following:

- ☐ Spin-on primary fuel filter
- ☐ Primary fuel filter adaptor
- ☐ Spin-on secondary fuel filter
- ☐ Secondary fuel filter adaptor
- ☐ Fuel shutoff valve or check valve

(Rev. 2004) *All information subject to change without notice.*
6SE483 0401 Copyright © 2004 DETROIT DIESEL CORPORATION

2.10.1 Replacement of Fuel Filter

As contaminants build up on the filter medium, a number of factors start to affect vehicle performance:

- The fuel delivery rate is reduced, making less fuel available for combustion.
- The fuel pump is forced to work harder to move the same volume of fuel. This subjects internal seals to abnormal conditions which may lead to seal leakage. In extreme cases air can be drawn into the fuel system.
- With the rate of flow slowed, fuel stays in the cylinder head for a longer period of time, allowing its temperature to rise above normal. Because fuel temperature has an affect on engine power, higher fuel temperatures normally result in reduced power.
- If the restriction is severe enough, fuel vaporization can occur, resulting in pockets of air that can further reduce fuel delivery.

All of these conditions can lead to power loss and subsequent operator complaints of "low power" and "reduced vehicle fuel economy" requiring more frequent downshift on grades.

 Copyright © 2004 DETROIT DIESEL CORPORATION

To determine if replacement of fuel filter element is necessary. See Figure 2-74.

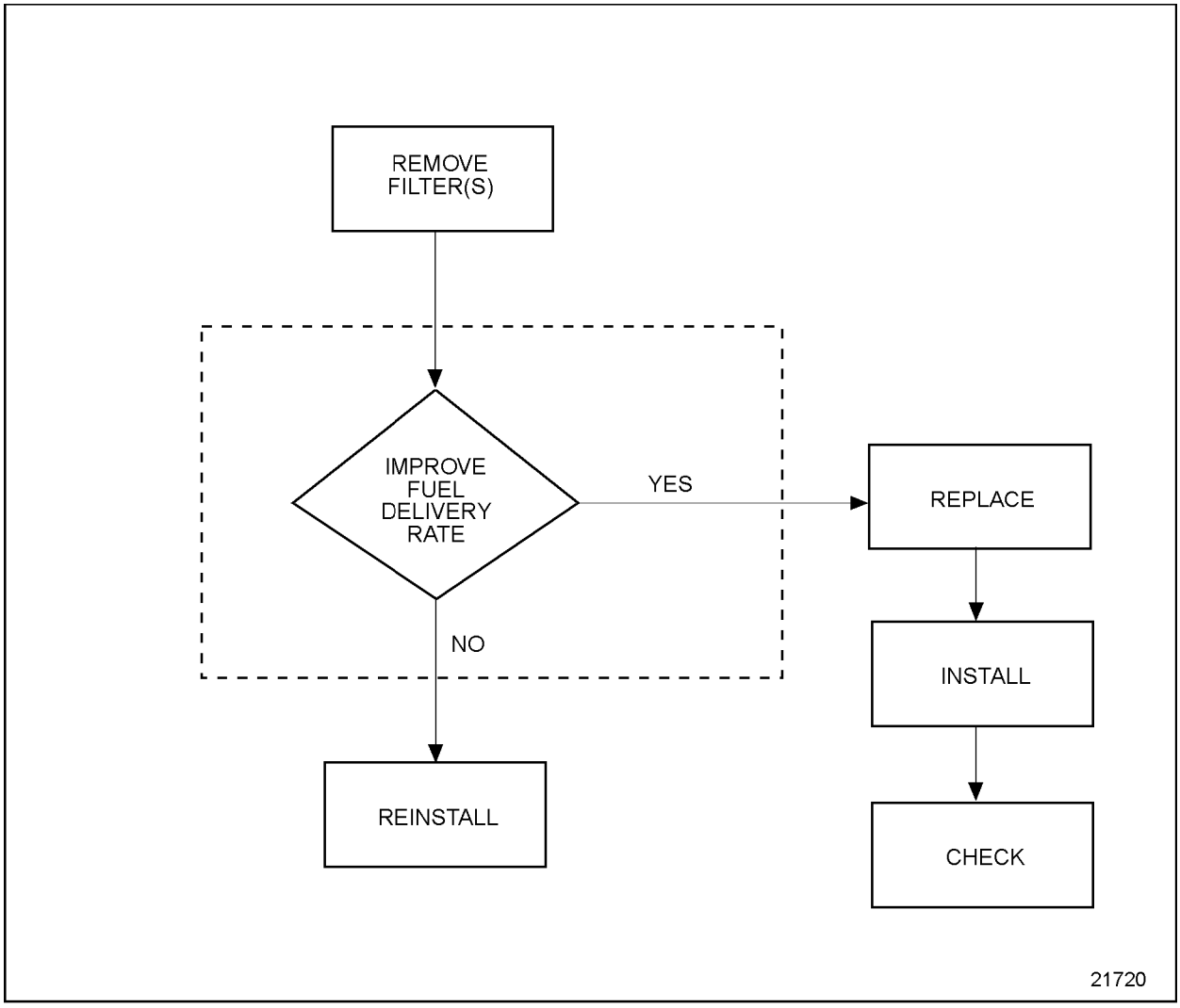

Figure 2-74 Flowchart for Replacement of Fuel Filter Element

(Rev. 2004) *All information subject to change without notice.*
6SE483 0401 Copyright © 2004 DETROIT DIESEL CORPORATION

2.10.2 Replacement of Fuel Filter

Replace spin-on primary and secondary fuel filters at the following intervals or earlier, if plugging is indicated:

- ☐ Truck and Parlor Coach — 15,000 Miles (24,000 Km)
- ☐ Transit Coach — 6,000 Miles (9,600 Km)
- ☐ Fire Fighting Apparatus — 6,000 Miles (9,600 Km)
- ☐ Industrial, Agricultural — 150 Hours
- ☐ Marine — 250 Hours

Replace Fuel Pro® and Sea Pro®152 primary filter elements when the fuel level in the see-thru filter cover reaches the top of the filter element or after one year of service, whichever comes first. Replace Sea Pro 150 or 300 spin-on primary filter element every 250 hours.

Replace spin-on secondary filter element at regular 250 hour intervals.

A method of determining when filters are plugged to the extent that they should be changed is based on the fuel pressure at the cylinder head fuel inlet fitting and the inlet restriction at the fuel pump. In a clean system, the maximum pump inlet restriction should not exceed 6 in. Hg (20.3 kPa) and must not exceed 12 in. Hg (41 kPa) with a dirty system.

At normal operating speeds and with the standard 0.080 in. (2.03 mm) restriction fittings, the fuel pressure at the cylinder head inlet is 345-577 kPa (50-83 lb/in.^{2}). Change the fuel filters whenever the inlet restriction at the fuel pump reaches 12 in. Hg (41 kPa) at normal operating speeds and whenever the fuel pressure at the cylinder head inlet fitting falls to the minimum fuel pressure shown above.

Spin-on type primary and secondary fuel filters used on Series 60 engines consist of a shell, element, and gasket unitized into the single cartridge and a filter cover, that includes a threaded sleeve to accept the spin-on filter cartridge. An optional fuel and water separator may be installed in place of the standard primary filter.

The Sea Pro 150 and 300 Fuel Processor Systems have a primary spin-on type filter mounted at the top of the processor body. This filter element and secondary filter element must be replaced every 250 hours or every year, whichever comes first. The Fuel Pro and Sea Pro 152 Fuel Processor Systems have primary cartridge-style filter elements installed in see-thru covers mounted on top of the fuel processor bodies. These filter elements must be changed when the fuel level in the see-thru cover reaches the top of the element. The secondary filter element must be replaced every 250 hours or every year, whichever comes first.

Fuel Pro® and Sea Pro®® are registered trademarks of Davco Manufacturing, L.L.C.

 Copyright © 2004 DETROIT DIESEL CORPORATION

Replace spin-on type primary or secondary filter elements as follows:

1. With the engine shut down, place a suitable container under the filter.
2. A fuel shutoff valve may be installed on the discharge side of the secondary fuel filter. If installed, turn the handle on the shutoff valve to the **closed** position (perpendicular to the valve).
3. Using a suitable band-type filter wrench, remove the primary and secondary fuel filters. Dispose of the filters in an environmentally responsible manner, according to state and federal (EPA) recommendations.
4. Fill new replacement filters with clean fuel oil, and coat the gaskets lightly with clean fuel oil.

NOTICE:
Overtightening may crack or distort the adaptors.

5. Thread the new filters onto the adaptors until they make full contact with the gasket and no side movement is evident. Then rotate an additional one-half turn **by hand.**
6. Turn the handle on the shutoff valve (if installed) to the **open** position (in line with the valve).

(Rev. 2004) *All information subject to change without notice.*
6SE483 0401 Copyright © 2004 DETROIT DIESEL CORPORATION

NOTICE:

To improve engine starting, have replacement filters filled with fuel and ready to install immediately after used filters are removed. This will prevent possible siphoning and fuel system aeration.

CAUTION:

Diesel engine exhaust and some of its constituents are known to the State of California to cause cancer, birth defects, and other reproductive harm.

- ☐ **Always start and operate an engine in a well ventilated area.**
- ☐ **If operating an engine in an enclosed area, vent the exhaust to the outside.**
- ☐ **Do not modify or tamper with the exhaust system or emission control system.**

7. Start the engine, and check for leaks.

NOTICE:

Under no circumstances should the starting motor and fuel pump be used to prime the fuel filters. Prolonged use of the starting motor and fuel pump to prime the fuel system can result in damage to the starter, fuel pump, and injectors and cause erratic running of the engine because of air in the lines and filters.

If the engine fails to start after filter replacement, the fuel system will require priming using tool J 5956. Authorized Detroit Diesel service outlets are properly equipped to perform this service.

 Copyright © 2004 DETROIT DIESEL CORPORATION

Replace the fuel and water separator as follows:

1. Drain off some fuel by opening the drain valve.
2. Using a strap wrench, remove the element and bowl together. Remove the bowl from the element. The filter and bowl have standard right-hand threads, so turn counterclockwise to remove.
3. Clean the bowl and the O-ring seal.

NOTICE:

To avoid damaging the bowl or the filter, do not use tools when tightening.

4. Apply a light coating of clean fuel or grease to the O-ring seal, spin the bowl onto the new filter, and *tighten by hand*.
5. Apply a light coating of clean fuel or grease to the new O-ring seal on the top of the filter. Spin the filter and bowl assembly onto the filter head, and *tighten by hand* until snug.
6. To eliminate air from the filter, operate the primer pump on the filter head (if equipped) until the fuel purges at the filter assembly.

CAUTION:

Diesel engine exhaust and some of its constituents are known to the State of California to cause cancer, birth defects, and other reproductive harm.

- ☐ **Always start and operate an engine in a well ventilated area.**
- ☐ **If operating an engine in an enclosed area, vent the exhaust to the outside.**
- ☐ **Do not modify or tamper with the exhaust system or emission control system.**

7. Start the engine, and check for leaks. Correct any leaks with the engine off.

(Rev. 2004) *All information subject to change without notice.*
6SE483 0401 Copyright © 2004 DETROIT DIESEL CORPORATION

2.10.3 Installation of Fuel Filter

Perform the following steps to install the fuel filter:

NOTICE:

Mechanical tightening of the fuel filters is not recommended, and may result in seal damage, cartridge damage, or both. Tighten the fuel filters by hand only.

1. Refer to section 13.13.14 for fuel filter installation.

NOTE:
There is a fuel system shutoff valve on the discharge side of the secondary fuel filter. This check valve is designed to prevent loss of fuel prime at time of filter replacement.

CAUTION:

To avoid injury before starting and running the engine, ensure the vehicle is parked on a level surface, parking brake is set, and the wheels are blocked.

CAUTION:

Diesel engine exhaust and some of its constituents are known to the State of California to cause cancer, birth defects, and other reproductive harm.

- ☐ **Always start and operate an engine in a well ventilated area.**
- ☐ **If operating an engine in an enclosed area, vent the exhaust to the outside.**
- ☐ **Do not modify or tamper with the exhaust system or emission control system.**

2. Start and run the engine. Check for leaks.
3. Shut down engine upon completion of test.

 Copyright © 2004 DETROIT DIESEL CORPORATION

2.11 FUEL PRO 380/380E FUEL FILTER SYSTEM

The Fuel Pro® 380/380E diesel fuel filter system is used in place of a separate spin-on primary fuel filter. See Figure 2-75. This system uses a high efficiency five-micron fuel filter element which requires replacement when the fuel level in the see-through filter cover reaches the top of the element or after one year of service, whichever comes first.

NOTE:
The secondary fuel filter *must* be changed at regular mile or hour intervals, depending on the engine application. Refer to section 13.13.14.

(Rev. 2004) *All information subject to change without notice.*
6SE483 0401 Copyright © 2004 DETROIT DIESEL CORPORATION

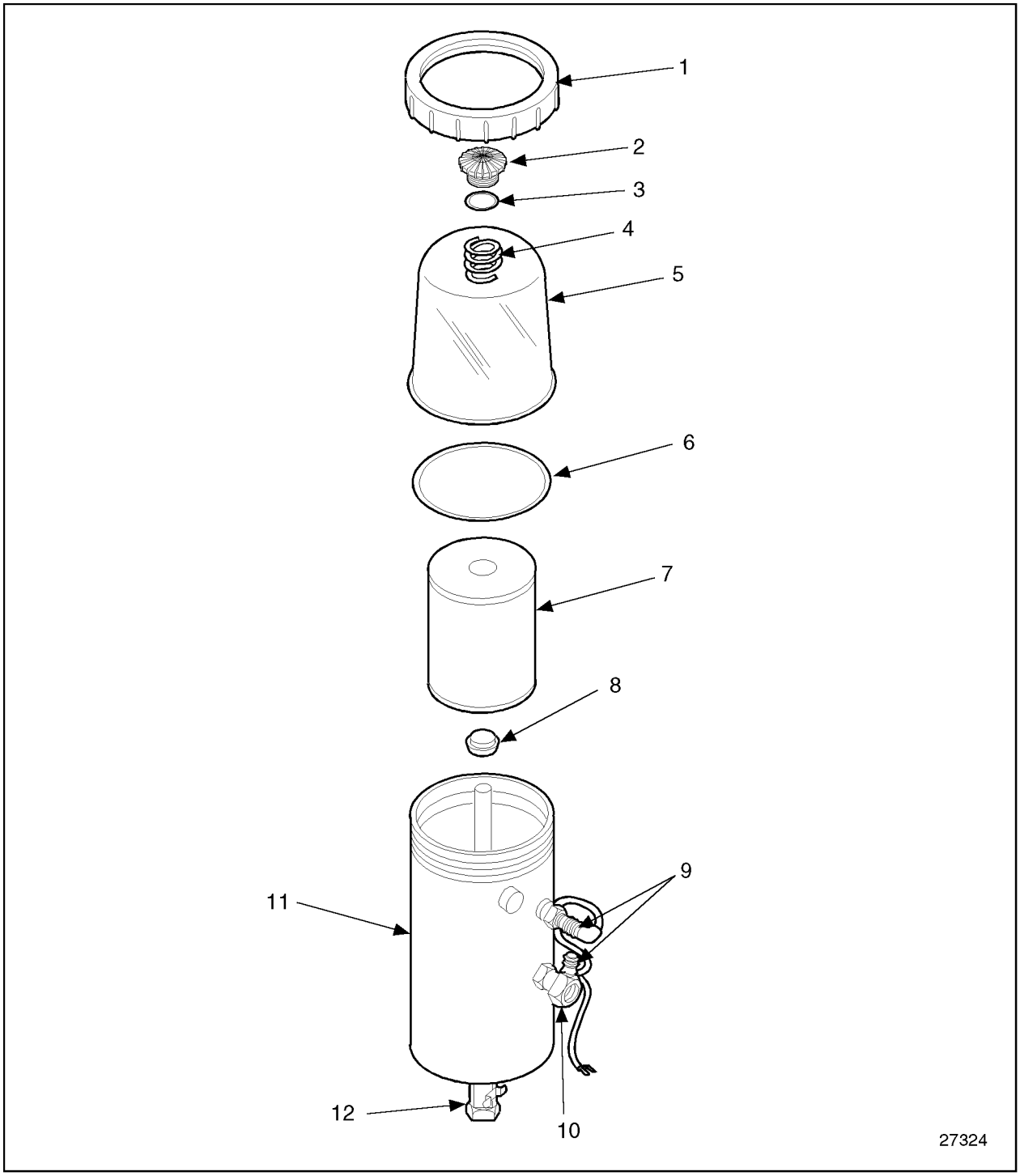
1
2
3
4
5
6
7
8
9
10
11
12
27324

1. Collar
2. Vent Cap
3. Vent Cap Seal
4. Spring (Part of Cover)
5. Cover
6. Cover Seal
7. Filter Element
8. Filter Seal Grommet (Part of Element)
9. Wiring Harness (380E System Only)
10. Check Valve and Thermostat
11. Fuel Processor Assembly
12. Drain Valve

Figure 2-75 Fuel Pro 380E Fuel Processor Assembly

(Rev. 2004) *All information subject to change without notice.*
6SE483 0401 Copyright © 2004 DETROIT DIESEL CORPORATION

The Fuel Pro 380/380E diesel fuel filter system consists of the following:

- ☐ A permanently mounted fuel processor
- ☐ A replaceable five-micron filter element and sealing grommet assembly
- ☐ A filter spring
- ☐ A see-through filter cover and O-ring seal
- ☐ A cover locking collar
- ☐ A cover vent cap and seal

The Fuel Pro 380E system also includes the following:

- ☐ A fuel heater element
- ☐ A thermostat switch
- ☐ A wiring harness

 Copyright © 2004 DETROIT DIESEL CORPORATION

2.11.1 Replacement of Fuel Pro 380E Fuel Filter Element

Replace the Fuel Pro filter element as follows:

⚠ CAUTION:

To avoid injury from fire caused by heated diesel-fuel vapors:

- ☐ **Keep those people who are not directly involved in servicing away from the engine.**
- ☐ **Stop the engine immediately if a fuel leak is detected.**
- ☐ **Do not allow open flames or smoke when working on an operating engine.**
- ☐ **Wear adequate protective clothing (face shield, insulated gloves and apron, etc.).**
- ☐ **To prevent a buildup of potentially volatile vapors, keep the engine area well ventilated during operation.**

Diesel fuel is relatively harmless at ambient temperatures.

1. With the engine shut down and cool, place a suitable container under the fuel processor.
2. A fuel shutoff valve may be installed on the discharge side of the fuel filter. If installed, turn the handle on the shutoff valve to the closed position (perpendicular to the valve).
3. Open the drain valve at the base of the fuel processor, and drain the fuel until it is below the level of the filter. Close the drain valve.
4. Using filter collar wrench, Part No. 23516731 or equivalent, remove the collar by turning counterclockwise. Remove the cover, filter spring, and cover seal ring by lifting straight up and over the filter element. Remove the element from the center stud (fuel outlet pipe) by pulling upward and twisting slightly.

NOTE:
Current filter elements include an integral sealing grommet. Former filter elements used a separate sealing grommet. If a former element is replaced, ensure the separate sealing grommet is removed from the center stud.

5. Dispose of the used filter element and grommet in an environmentally responsible manner, according to state and/or federal (EPA) recommendations.

Fuel Pro® is a registered trademark of Davco Manufacturing Corporation, L.L.C.

(Rev. 2004) *All information subject to change without notice.*
6SE483 0401 Copyright © 2004 DETROIT DIESEL CORPORATION

2.11.2 Installation of Fuel Pro 380E Fuel Filter Element

Install the Fuel Pro filter element as follows:

1. Ensure a sealing grommet is included in the base of the replacement element, then install the element onto the center stud.

NOTICE:
Do not use a wrench of any kind to tighten the collar, since this may lead to overtightening which can damage the collar and the cover.

2. Ensure the filter spring is installed at the top of the cover. If missing, the spring *must* be replaced to insure proper filter operation. Wipe the cover lip and cover seal clean. After ensuring the seal is properly positioned at the base of the cover, install the cover and collar onto the fuel processor. Tighten the collar *by hand* until secure.

NOTICE:
To avoid cover or vent plug damage, do not use tools to tighten the vent cap.

3. Remove the vent cap from the top of the cover by turning the cap counterclockwise. Fill the cover *full*of clean fuel. After ensuring the O-ring seal is installed on the vent cap, reinstall the cap and *tighten by hand only*.

⚠ CAUTION:
Diesel engine exhaust and some of its constituents are known to the State of California to cause cancer, birth defects, and other reproductive harm. ☐ **Always start and operate an engine in a well ventilated area.** ☐ **If operating an engine in an enclosed area, vent the exhaust to the outside.** ☐ **Do not modify or tamper with the exhaust system or emission control system.**

4. Open the fuel shutoff valve (if installed) and start the engine. When the lubrication system reaches its normal operating pressure, increase engine speed to high idle for 2 to 3 minutes.

 Copyright © 2004 DETROIT DIESEL CORPORATION

NOTICE:
Do not allow the fuel level in the see-thru cover to fall below the top of the collar, since this may lead to interruption of the fuel flow and engine stalling.

5. After the air is purged and with the engine still running, *slowly* loosen the vent cap on the filter cover. The fuel level in the cover will start falling. When the fuel level falls to the top of the collar, tighten the vent cap quickly by hand.

NOTICE:
Do not use a wrench of any kind to tighten the collar, since this may lead to overtightening which can damage the collar and the cover.

6. Shut down the engine and *hand-tighten* the collar again.
7. Refer to section 2.11.2 for the exhaust caution before preceeding. Restart the engine and check for leaks.

NOTE:
The clear filter cover will not fill completely during engine operation. It will gradually fill over time as the filter medium becomes clogged. The filter element does not require changing until the fuel level has risen to the top of the element, or after one year of service, whichever comes first.

NOTE:
The secondary fuel filter *must* be changed at regular mile or hour intervals, depending on the engine application. Refer to section 13.13.14.

(Rev. 2004) *All information subject to change without notice.*
6SE483 0401 Copyright © 2004 DETROIT DIESEL CORPORATION

2.12 SEA PRO 150/300 DIESEL FUEL PROCESSOR SYSTEM (MARINE)

The Sea Pro® 150 fuel processor system (recommended by DDC) consists of a primary fuel processor assembly secured to a mounting plate with two U-bolts, washers, and nuts. The Sea Pro® 300 diesel fuel processor system consists of two primary fuel processor assemblies secured to a mounting plate with four U-bolts, washers, and nuts. Each processor assembly consists of a replaceable spin-on filter element assembly with a vent cap, seal ring, and reusable element splash guard. Each processor also has a water-in-fuel (WIF) switch that requires an optional module for activation. The Sea Pro 150 and 300 systems may also include an optional electric primer pump. See Figure 2-76 for the Sea Pro 150 and see Figure 2-77 for the Sea Pro 300. The Sea Pro system is installed between the fuel tank and the fuel pump.

Sea Pro® is a registered trademark of Davco Manufacturing, L.L.C.

 Copyright © 2004 DETROIT DIESEL CORPORATION

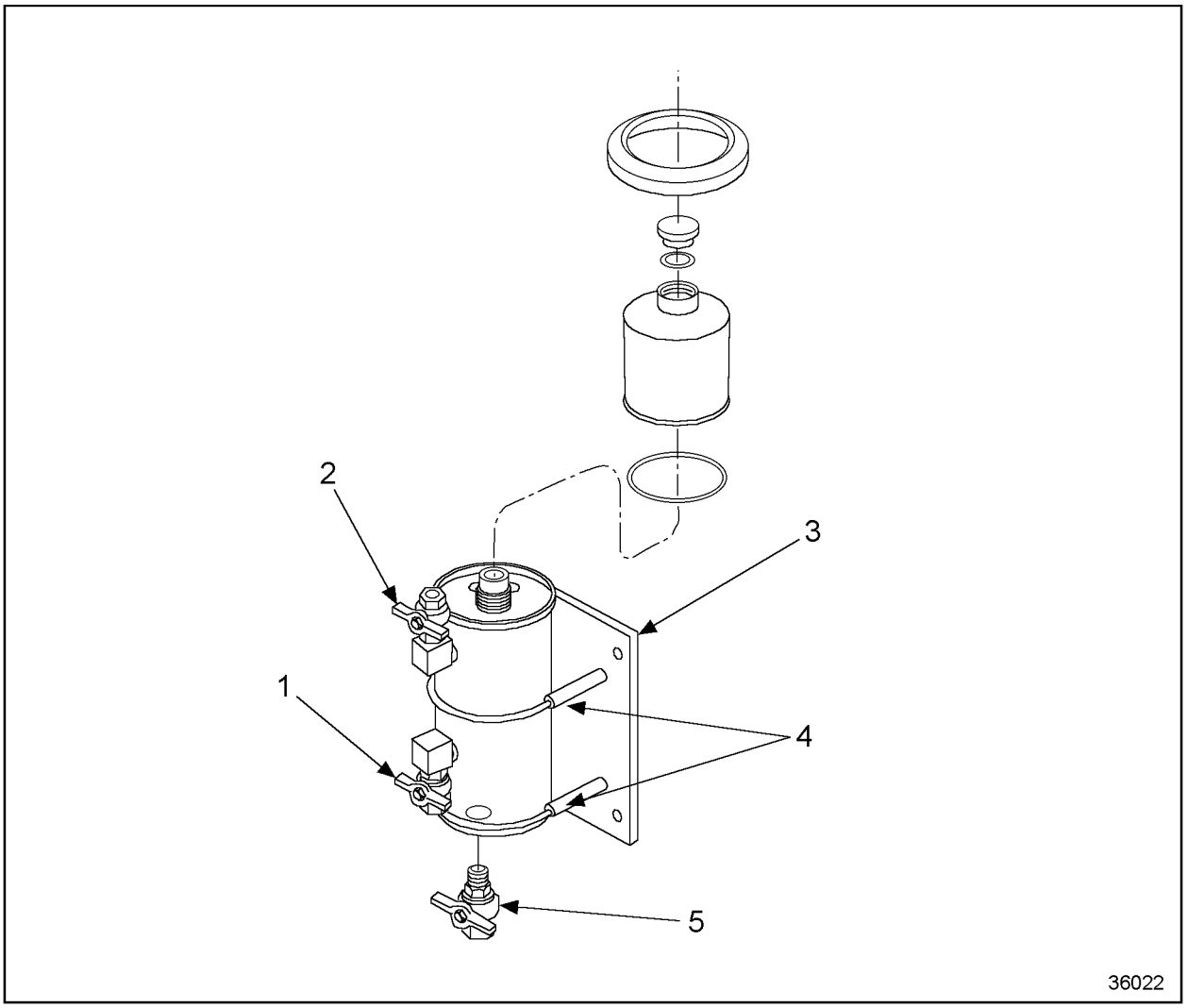

1. Fuel Inlet Valve
2. Fuel Outlet Valve
3. Mounting Plate
4. U-bolts
5. Drain valve

Figure 2-76 Sea Pro 150 Diesel Fuel Processor System

(Rev. 2004) *All information subject to change without notice.*
6SE483 0401 Copyright © 2004 DETROIT DIESEL CORPORATION

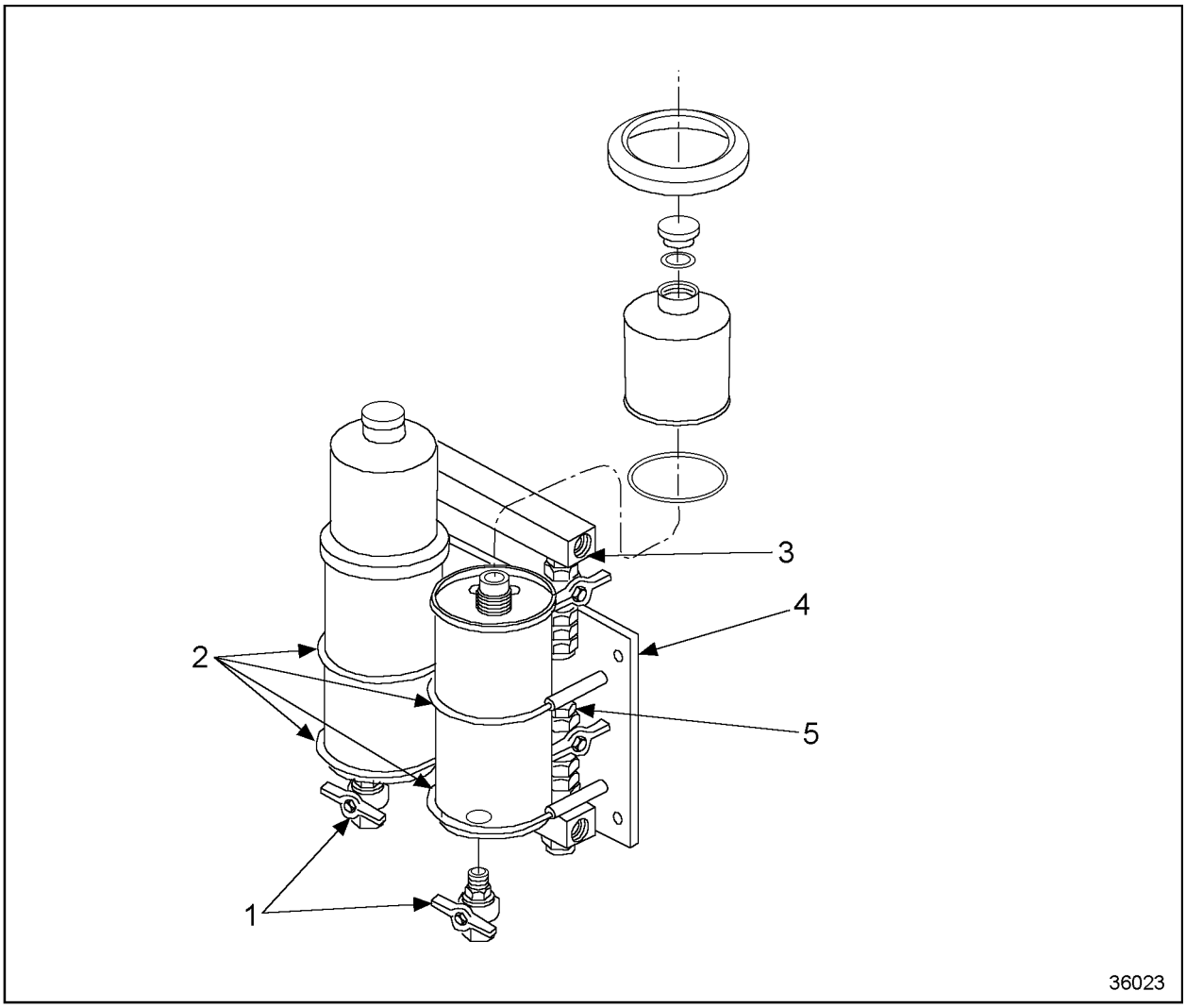

1. Drain Valves
2. U-bolts
3. Fuel Outlet Valve
4. Mounting Plate
5. Fuel Inlet Valve

Figure 2-77 Sea Pro 300 Fuel Processor System

 Copyright © 2004 DETROIT DIESEL CORPORATION

2.12.1 Replacement of the Sea Pro 150 or 300 Filter Element

To determine if repair is possible or replacement is necessary perform the following procedure. See Figure 2-78.

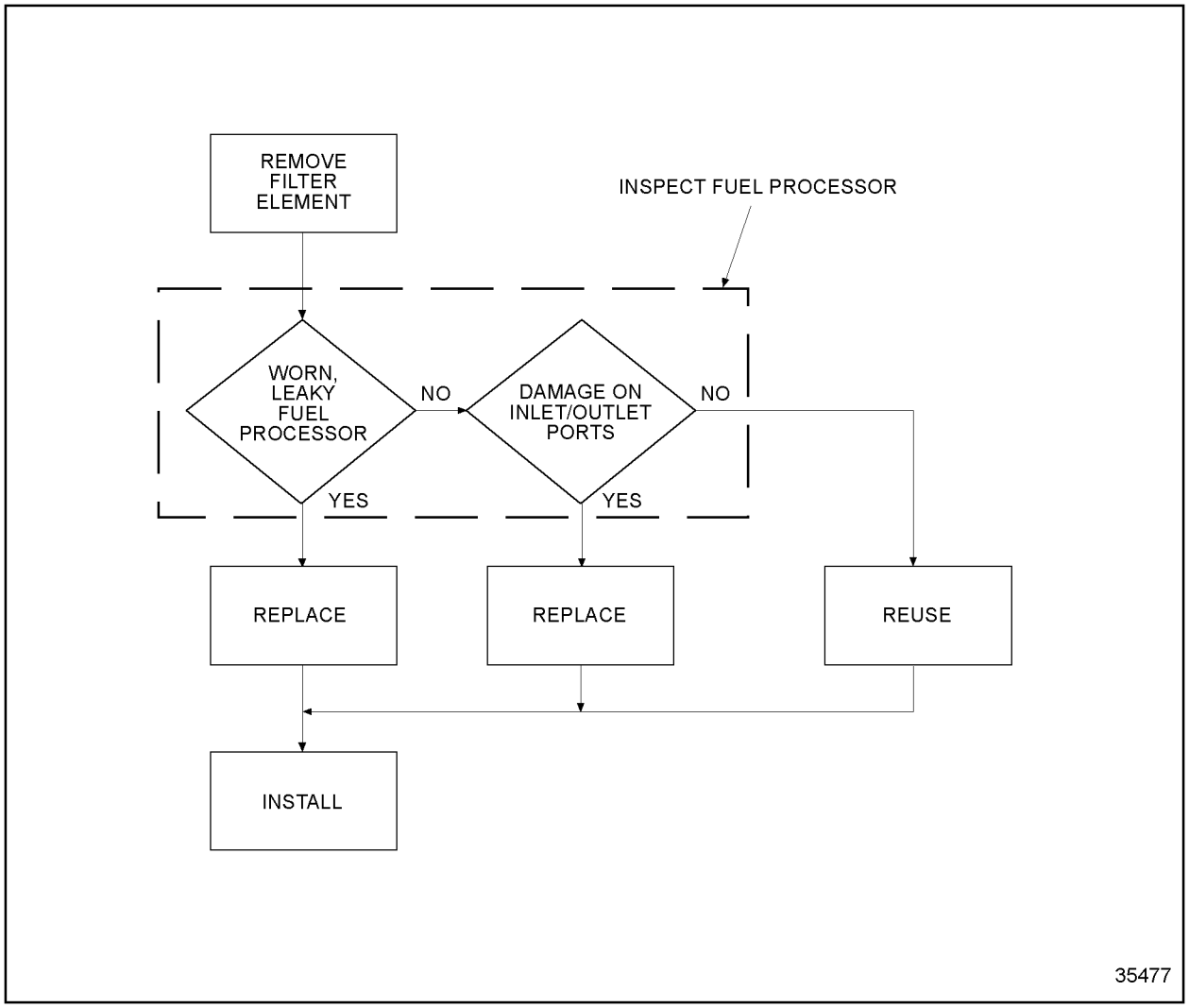

Figure 2-78 Flowchart of Repair or Replacement of the Sea Pro 150 or 300 Filter Element

(Rev. 2004) *All information subject to change without notice.*
6SE483 0401 Copyright © 2004 DETROIT DIESEL CORPORATION

2.12.2 Removal of the Sea Pro 150 or 300 Fuel Filter Element

Detroit Diesel recommends shutting down the engine and allowing it to cool to engine room temperature before replacing fuel filter elements.

⚠ CAUTION:

To avoid injury from fire caused by heated diesel-fuel vapors:

- ☐ **Keep those people who are not directly involved in servicing away from the engine.**
- ☐ **Stop the engine immediately if a fuel leak is detected.**
- ☐ **Do not allow open flames or smoke when working on an operating engine.**
- ☐ **Wear adequate protective clothing (face shield, insulated gloves and apron, etc.).**
- ☐ **To prevent a buildup of potentially volatile vapors, keep the engine area well ventilated during operation.**

Diesel fuel is relatively harmless at ambient temperatures.

1. Close fuel inlet and outlet valves on the fuel processor. If changing a Sea Pro 300 filter "on the run", open the fuel manifold inlet and outlet valve of the new filter before closing the inlet and outlet valve of the used filter.

NOTE:
On some Sea Pro 300 models this is accomplished by moving the selector valve lever on the fuel manifold to the "Service Right Can" or "Service Left Can" position.

 Copyright © 2004 DETROIT DIESEL CORPORATION

2. Open the vent plug on top of the element being serviced, place a suitable container under the processor, and remove the drain valve plug (if installed). Open the bottom valve and allow about a pint of fuel to drain out.

NOTE:
This will help drain the filter element of fuel.

NOTE:
Dispose of the used element in an environmentally friendly manner, according to state and federal (EPA) recommendations.

3. Close the valve, and install the valve drain plug.

NOTICE:
The center hole of the processor is the clean fuel outlet to the cylinder head. To avoid possible contamination of the clean fuel, cover the top of the processor with a clean cloth immediately after the filter element is removed.

4. Using a suitable strap-type filter wrench, rotate the filter element counterclockwise, and spin it off the fuel processor body.

NOTE:
Any fuel left in the filter element will be caught by the deep well in which the element sits and will drain back into the fuel processor.

5. Remove the reusable plastic splash seal from the element and retain for reuse.

NOTE:
Dispose of the used element in an environmentally friendly manner, according to state and federal (EPA) recommendations.

2.12.2.1 Inspection of the Sea Pro 150 or 300 Fuel Processor

Inspection the Sea Pro 150 or 300 as follows:

1. Inspect the fuel processors for worn, damaged, or leaky fittings.
   [a] If damage was found, replace the component.
   [b] If no damage was found, reuse the component.
2. Inspect threaded inlet and outlet ports on the fuel processors and fuel manifold for damage.
   [a] If damage was found, replace the component.
   [b] If no damage was found, reuse the component.

(Rev. 2004) *All information subject to change without notice.*
6SE483 0401 Copyright © 2004 DETROIT DIESEL CORPORATION

2.12.3 Installation of the Sea Pro 150 or 300 Filter Element

Install the Sea Pro 150 or 300 filter element as follows:

1. Check the new spin-on element to ensure the O-ring seal is just inside the center opening and the perimeter seal is installed at the base.

NOTE:
Do not install the element if either seal is missing, since this will result in fuel leakage.

NOTICE:
Do not use a strap wrench or other tool to tighten the element. Over-tightening may result in filter element or fuel processor damage or both.

2. Wipe the perimeter seal contact surface on top of the processor with a clean cloth.
3. Using clean engine oil, lubricate the center O-ring and perimeter seal.
4. Install the element onto the processor center stud by pressing down, on the element and rotating clockwise to engage the threads. ***Tighten by hand only.***
5. Install the plastic splash guard onto the element and push down until firmly seated over the fuel processor well.

NOTICE:
Do not use a tool to tighten the vent plug. Over-tightening may result in vent plug or fuel processor damage or both.

6. If the fuel processor assembly is not equipped with a fuel primer pump, remove the vent plug at the top of the filter and fill the element with clean fuel. Replace the plug and ***tighten by hand only.***
7. If the processor is equipped with a fuel primer pump, prime the system as follows:
   [a] Remove the vent on the filter.
   [b] Turn the fuel flow valve to "Prime System".
   [c] Push the momentary switch mounted above primer pump until fuel is visible in the sight glass on the processor body.
   [d] Continue to push switch for an additional 5 to 10 seconds to fill the filter.
   [e] Replace vent on the filter and ***tighten by hand*** until secure.
8. Open fuel inlet and outlet valves on the fuel processor manifold. If equipped, put primer pump selector valve in the "Run Position".

 Copyright © 2004 DETROIT DIESEL CORPORATION

CAUTION:

Diesel engine exhaust and some of its constituents are known to the State of California to cause cancer, birth defects, and other reproductive harm.

- ☐ **Always start and operate an engine in a well ventilated area.**
- ☐ **If operating an engine in an enclosed area, vent the exhaust to the outside.**
- ☐ **Do not modify or tamper with the exhaust system or emission control system.**

9. Start the engine and check for leaks.

(Rev. 2004) *All information subject to change without notice.*
6SE483 0401 Copyright © 2004 DETROIT DIESEL CORPORATION

2.13 SEA PRO 152 FUEL FILTER SYSTEM (MARINE ENGINE)

The Sea Pro® 152 diesel fuel processor system is used in place of a separate spin-on primary fuel filter. See Figure 2-79. This system uses a high efficiency five-micron fuel filter element which requires replacement when the fuel level in the see-thru filter cover reaches the top of the element or after one year of service, whichever comes first.

NOTE:
The secondary fuel filter *must* be changed at regular hour intervals. Refer to section 13.13.14.

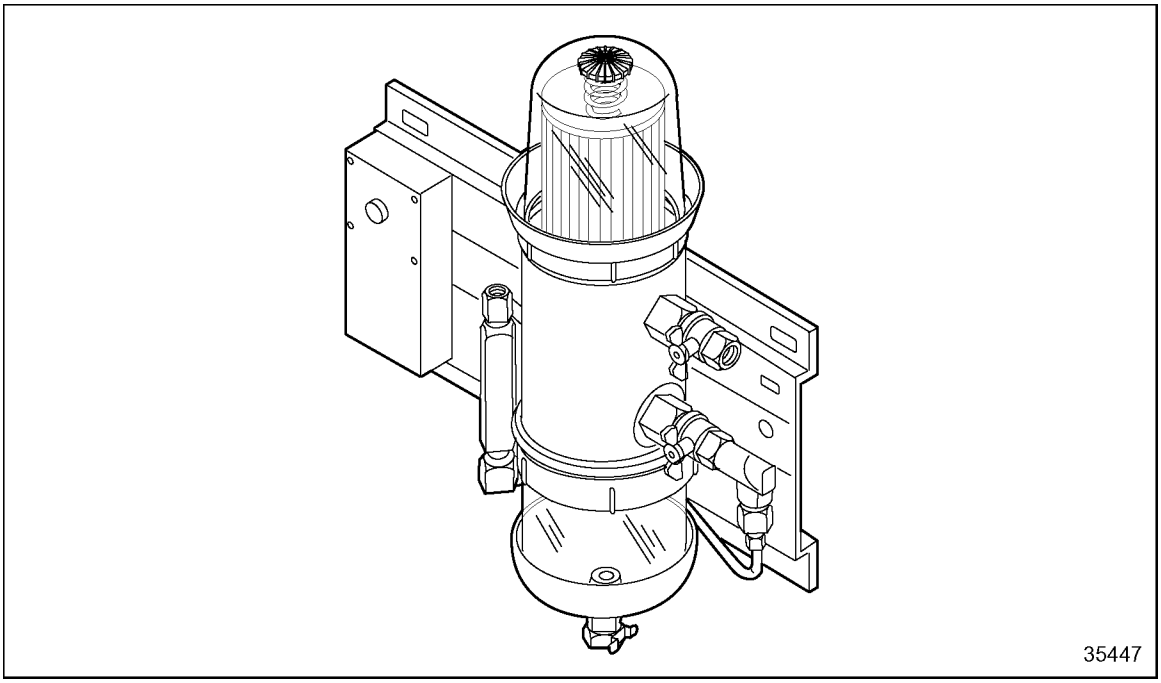

Figure 2-79 Sea Pro 152 Fuel Processor System

 Copyright © 2004 DETROIT DIESEL CORPORATION

The Sea Pro 152 diesel fuel processor system consists of the following:

- ☐ A permanently mounted fuel processor
- ☐ A replaceable five-micron filter element and sealing grommet assembly
- ☐ A filter spring
- ☐ A see-thru filter cover and O-ring seal
- ☐ A cover-locking retainer collar/deflector
- ☐ A cover vent cap and seal
- ☐ An electric fuel primer pump
- ☐ Fuel inlet and outlet valves
- ☐ A see-thru water filter bowl and collar assembly

2.13.1 Replacement of Sea Pro 152 Fuel Filter Element

Replace the Sea Pro 152 filter element as follows:

1. With the engine shut down and at ambient temperature (cool to the touch), place a suitable container under the fuel processor.
2. Turn the fuel inlet and outlet valves on the fuel processor to the closed position (perpendicular to the valves) and loosen the vent cap on the see-thru cover. See Figure 2-80.

(Rev. 2004) *All information subject to change without notice.*
6SE483 0401 Copyright © 2004 DETROIT DIESEL CORPORATION

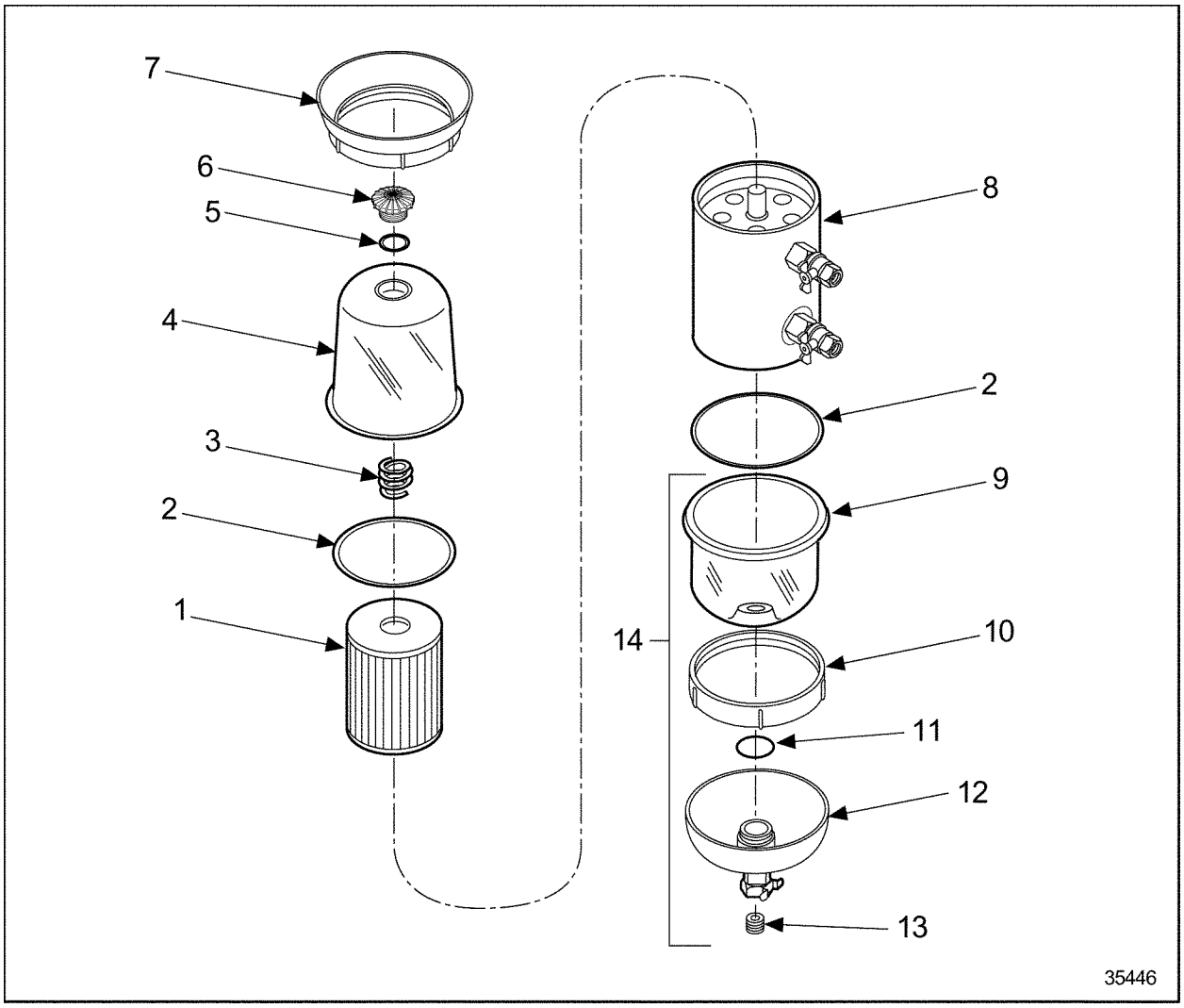

1. Filter Element
2. Cover Seal
3. Spring (part of cover assembly)
4. See-Thru Cover Assembly
5. Vent Cap Seal
6. Vent Cap
7. Retainer/Deflector Collar
8. Fuel Processor Assembly
9. See-Thru Water Separator Bowl
10. Retainer Collar
11. Deflector/Drain Valve Assembly
12. Drain Valve Plug
13. Water Filter Bowl and Collar Assembly

Figure 2-80 Sea Pro 152 Fuel Processor/Filter Assembly

 Copyright © 2004 DETROIT DIESEL CORPORATION

3. Remove the plug from the drain valve at the base of the water-separator bowl, open the valve, and drain the fuel until it is below the level of the retainer/deflector collar on the see-thru cover. Close the drain valve and replace the plug.
4. Using the offset wrench supplied with the Sea Pro 152 fuel processor assembly, turn the cover retainer/deflector collar counterclockwise and remove. Then remove the cover, filter spring, and cover seal ring by lifting straight up and over the filter element. Remove the element from the center stud by pulling upward and twisting slightly.

NOTE:
Any remaining fuel dripping from the element will be caught by the deep well in which the element sits and will drain into the processor body.

5. Dispose of the used element in an environmentally responsible manner, according to state and/or federal (EPA) recommendations.

2.13.2 Installation of Sea Pro 152 Fuel Filter Element

Install the Sea Pro 152 element as follows:

1. Before installing the new filter element, ensure the sealing surface on top of the processor body is clean by wiping with a clean cloth or paper towel.
2. Ensure a sealing grommet is included in the base of the replacement filter, then install the element onto the center stud by pushing down and twisting slightly to seat the element.
3. Ensure the filter spring is installed at the top of the cover. If missing, the spring must be replaced to insure proper filter operation. Wipe the cover lip and cover seal clean. After ensuring the seal is properly positioned at the base of the cover, install the cover over the filter and onto the fuel processor. Install the retainer/deflector collar. Then, using the wrench supplied with the fuel processor assembly, tighten the collar securely.

NOTICE:
To avoid cover or vent cap damage, do not use tools to tighten the vent cap.

4. Remove the vent cap from the top of the cover by turning counterclockwise, then open the fuel inlet valve on the processor body. Do not open the outlet valve. Fill the cover to the top of the filter element with clean fuel by operating the electric primer pump. After ensuring the O-ring seal is installed on the vent cap, reinstall the cap and tighten by hand only. Open the fuel outlet valve.

(Rev. 2004) *All information subject to change without notice.*
6SE483 0401 Copyright © 2004 DETROIT DIESEL CORPORATION

⚠ CAUTION:

Diesel engine exhaust and some of its constituents are known to the State of California to cause cancer, birth defects, and other reproductive harm.

- ☐ **Always start and operate an engine in a well ventilated area.**
- ☐ **If operating an engine in an enclosed area, vent the exhaust to the outside.**
- ☐ **Do not modify or tamper with the exhaust system or emission control system.**

5. Start the engine. When the lubrication system reaches its normal operating pressure, increase engine speed to high idle for 2 to 3 minutes.

NOTICE:

To avoid possible cover or vent cap damage, do not use tools to tighten the vent cap.

NOTICE:

Do not allow the fuel level in the see-thru cover to fall *below* the top of the retainer collar/deflector, since this may lead to interruption of the fuel flow and engine stalling.

6. After the air is purged and with the engine still running, *slowly* loosen the vent cap on the filter cover. The fuel level will start falling. When the level falls to the top of the retainer/deflector collar, tighten the vent cap securely *by hand*.
7. With the engine running, check for leaks.
8. Shut down the engine.

NOTE:
The see-thru filter cover will not fill completely during engine operation. It will gradually fill over time as the filter medium becomes clogged. The filter element does not require changing until the fuel level has risen to the top of the element, or after one year of service, whichever comes first.

NOTE:
The secondary fuel filter must be changed at regular hour intervals.
Refer to section 13.13.14.

 Copyright © 2004 DETROIT DIESEL CORPORATION

2.13.3 Removal of See-Thru Water Filter Bowl and Collar Assembly

Removal of the see-thru water filter bowl and collar assembly at the bottom of the processor body may be required for occasional cleaning. To remove and clean the bowl and collar assembly, proceed as follows:

1. Close the fuel inlet and outlet valves and loosen the vent cap on the see-thru cover.
2. Place a suitable container under the see-thru bowl, and remove the drain valve plug. Open the drain valve, and drain the filter, processor, and bowl completely of fuel. Dispose of the fuel in an environmentally friendly manner, according to state and/or federal (EPA) recommendations.
3. Using the offset wrench supplied with the Sea Pro 152 fuel processor assembly, turn the retainer collar clockwise (as viewed from the top) until it separates from the processor body. Pull the collar and bowl assembly down and away from the processor body. Remove and retain the O-ring seal in the groove at the top of the bowl.
4. Clean the bowl and collar assembly in mild detergent and warm water and dry with a clean, soft cloth.

2.13.3.1 Inspection of See-Thru Water Filter Bowl and Collar Assembly

Inspect the see-thru water filter bowl and collar assembly as follows:

1. Inspect the top seal for damage. If reusable, reinstall. If damaged, replace.
2. Inspect the bowl for damage. If reusable, reinstall the assembly. If damaged, replace the bowl as follows:
   [a] Hold the bowl securely and disassemble the drain valve by turning counterclockwise.
   [b] Remove the drain valve and separate the bowl and collar from the deflector. Remove and discard the bowl and the O-ring seal between the deflector and the bowl.
   [c] Clean the deflector thoroughly in mild detergent and warm water to remove any residual seal material and dry with a soft cloth.

NOTICE:
Do not overtighten the drain valve, since this will damage the threads in the bowl, resulting in fuel leakage.

   [d] With the deflector facing up, place a new O-ring seal over the center opening. Position the collar-threaded side up on top of the deflector, then place the new bowl onto the O-ring seal. Screw the drain valve into the threads in the bowl, and tighten securely by hand.

(Rev. 2004) *All information subject to change without notice.*
6SE483 0401 Copyright © 2004 DETROIT DIESEL CORPORATION

2.13.4 Installation of See-Thru Water Filter Bowl and Collar Assembly

Install the see-thru water filter bowl and collar assembly as follows:

1. With the O-ring seal in the top groove of the bowl, position the bowl and collar assembly onto the base of the processor body and thread the retainer collar onto the processor.
2. Using the offset wrench supplied with the fuel processor assembly, tighten the collar securely.

2.13.5 Priming Sea Pro 152

For efficient engine operation, the Sea Pro 152 processor system *must* be properly primed after the filter element is replaced and *before* the engine is started.

NOTICE:
Failure to prime the fuel system after filter replacement may result in aerated fuel reaching the injectors. This could cause hard starting, reduced engine performance, injector damage, or all three consequences.

Prime the Sea Pro 152 fuel processor system as follows:

1. Refer to section2.13 of the *Series 60 Service Manual*, and replace the Sea Pro filter element.

 Copyright © 2004 DETROIT DIESEL CORPORATION

2. With the replacement element installed, make sure the outlet valve and drain valve on the processor assembly are closed. See Figure 2-81.

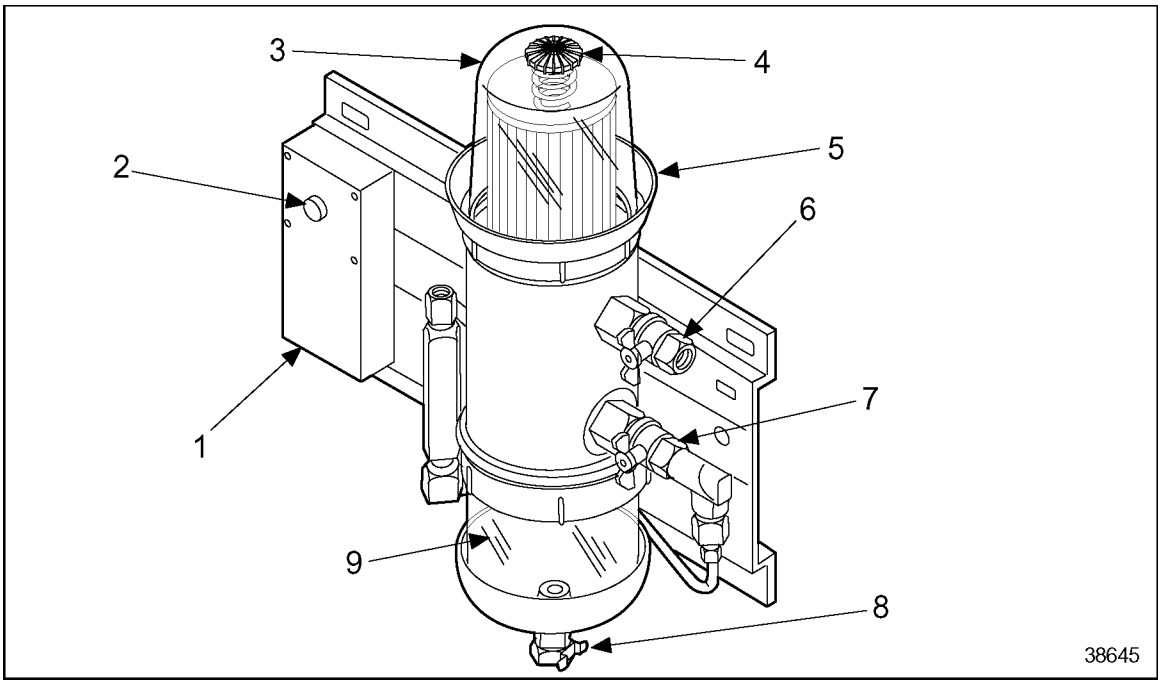

1. Priming Pump
2. Momentary Switch Button
3. See-Thru Cover
4. Vent Cap
5. Retainer Collar/Deflector
6. Fuel Outlet Valve
7. Fuel Inlet valve
8. Drain Valve
9. See-Thru Bowl

Figure 2-81 Sea Pro 152 Fuel Processor System

3. Open or remove the vent cap on the see-thru cover assembly by turning counter-clockwise. Then open the fuel inlet valve on the fuel processor. *Do not open the fuel outlet valve at this time*.
4. Press the momentary switch button on the electric priming pump until the see-thru filter cover is filled with enough fuel to cover the filter element.

NOTICE:
To avoid possible cover or vent cap damage, do not use tools to tighten the vent cap.

5. After ensuring the O-ring seal is installed on the vent cap, replace the vent cap on the see-thru filter cover, if previously removed. Tighten the vent cap *by hand* until secure.
6. Refer to section2.13.2 for the exhaust caution before preceeding. Open the fuel outlet valve on the fuel processor, and start the engine.

(Rev. 2004) *All information subject to change without notice.*
6SE483 0401 Copyright © 2004 DETROIT DIESEL CORPORATION

7. When the lubrication system reaches its normal operating pressure, increase engine speed to 1500 rpm for 2 or 3 minutes.

NOTICE:
Do not allow the fuel level in the see-thru cover to fall below the top of the retainer collar/deflector, since this may lead to interruption of the fuel flow and engine stalling.

8. After the air is purged and with the engine still running, *slowly* loosen the vent cap on the filter cover. The fuel level in the see-thru cover will start falling. When the level falls to the top of the retainer collar/deflector, tighten the vent cap quickly *by hand*.
9. With the engine running, check for leaks.
10. Shut down the engine.
11. If the drained fuel is to be reused, return it to the fuel tank. If the fuel is not to be reused, dispose of it in an environmentally friendly manner, according to state and/or federal (EPA) recommendations.

 Copyright © 2004 DETROIT DIESEL CORPORATION

2.14 FUEL FILTER TYPE FOR THE SERIES 60G ENGINE

The primary (High Pressure) natural gas filter and secondary (Low Pressure) natural gas filter must be a coalescing 0.3 micron @ 99.97% efficiency fuel filter. Detroit Diesel recommended filters include the following:

- ☐ Racor — fuel filter 23529393 for use only with fuel filter housing FFC-113
- ☐ Racor — fuel filter 23529394 for use only with fuel filter housing FFC-114

The high pressure gas filter is mounted between the manual shutoff valve and the DDEC controlled shutoff valve.

Drain coalescing fuel filters daily. Inspect natural gas fuel filter every 6,000 miles (9,600 km). Replace fuel filter if dirt, debris or foreign objects are present “inside” of the fuel filter. Also, replace if fuel filter seal is damaged.

NOTE:
Oil saturation on the outside of the fuel filter is a NORMAL condition of the oil coalescing process.

(Rev. 2004) *All information subject to change without notice.*
6SE483 0401 Copyright © 2004 DETROIT DIESEL CORPORATION

2.14.1 Replacement of Fuel Filter for the Series 60G Engine

Replacement of the fuel filter. See Figure 2-82.

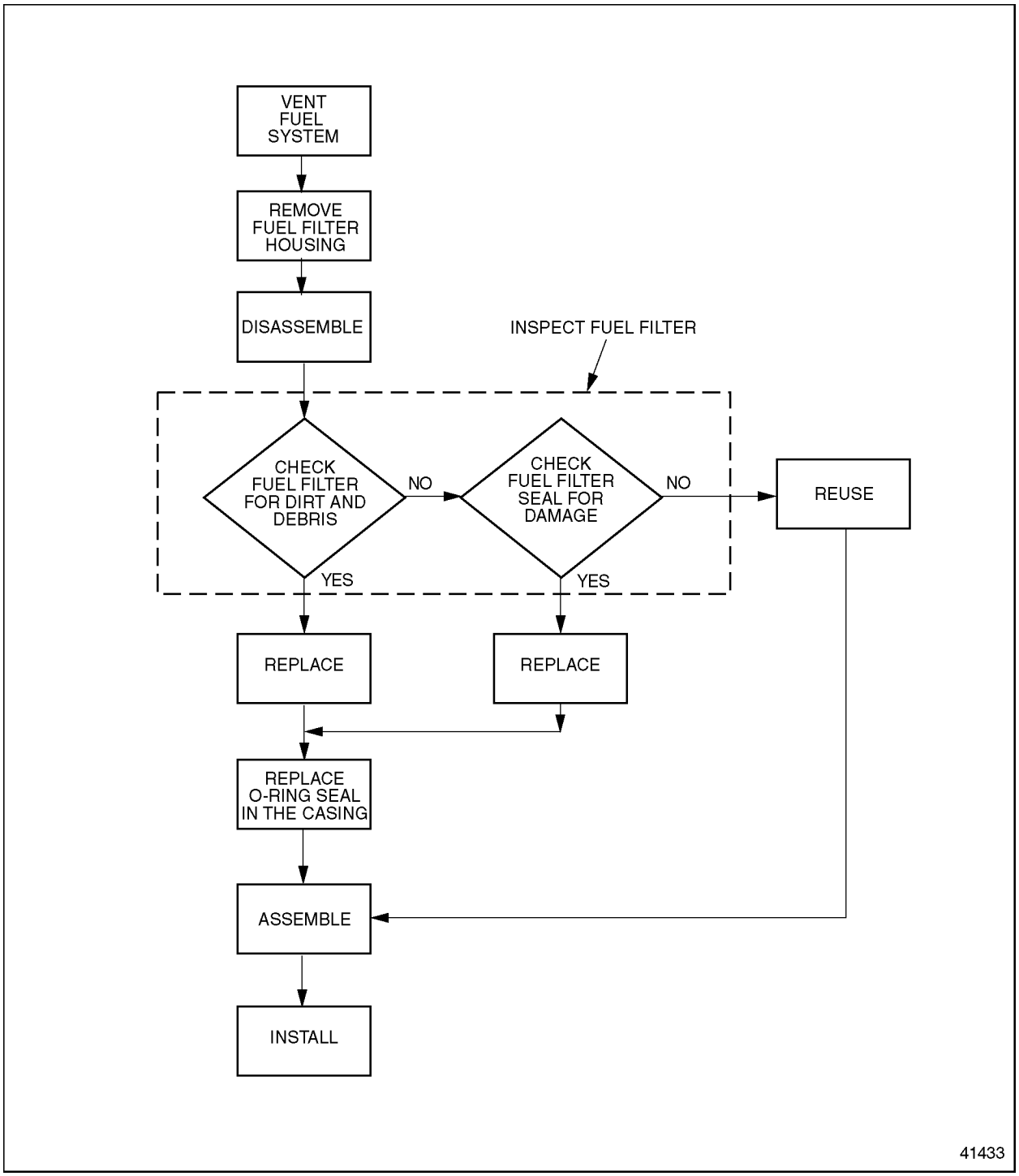

Figure 2-82 Replacement of the Fuel Filter

 Copyright © 2004 DETROIT DIESEL CORPORATION

2.14.2 Removal of Fuel Filter for the Series 60G Engine

Prior to removal or replacement of the fuel filter, the fuel system must be vented. Refer to section 2.43.1 and refer to section 2.43.2.

(Rev. 2004) *All information subject to change without notice.*
6SE483 0401 Copyright © 2004 DETROIT DIESEL CORPORATION

CAUTION:

To avoid injury from the explosion of natural gas, the engine must be kept in a well-ventilated area away from open flames, sparks, and electrical resistance (heating) coils.

CAUTION:

To avoid injury from an explosion of natural gas, the following precautions must be taken:

- **Do not smoke when installing or servicing the engine or fuel system.**
- **Installation or servicing of natural-gas equipment must only be conducted in well-ventilated, natural gas compatible areas. Do not install or service equipment in an enclosed area where ignition sources are present without first ensuring that an undetected gas leak may be safely vented without being ignited.**
- **Bleed natural gas lines before installing or servicing any component connected to the fuel lines.**
- **Natural gas fuel systems are pressurized. Relieve pressure from any fuel system component prior to installation or service of that component.**
- **Use a combustible-gas detector. Liquefied natural gas (LNG) is odorless and cannot be detected by smell. Compressed Natural gas (CNG) may be odorless and may not be detected by smell.**
- **Equipment fuel systems are the responsibility of the Original Equipment Manufacturer (OEM). Equipment fuel system guidelines must be closely adhered to when installing or servicing equipment. Refer to OEM guidelines specifying which maintenance procedures require venting of fuel lines and fuel tanks.**
- **LNG systems are pressurized and contain extremely cold (-260°F [-162°C]) fluids. Contact the fuel supplier or OEM for LNG safety requirements. Contact with LNG may cause personal injury (freezing).**
- **Vent systems on the equipment should be ducted to a safe area whenever equipment is in an enclosed area.**

Natural gas is highly flammable and explosive and may be extremely cold (-260°F [-162°C]).

 Copyright © 2004 DETROIT DIESEL CORPORATION

Remove fuel filter as follows:

1. Unscrew the bottom fuel filter housing and filter element from fuel filter housing head. See Figure 2-83.

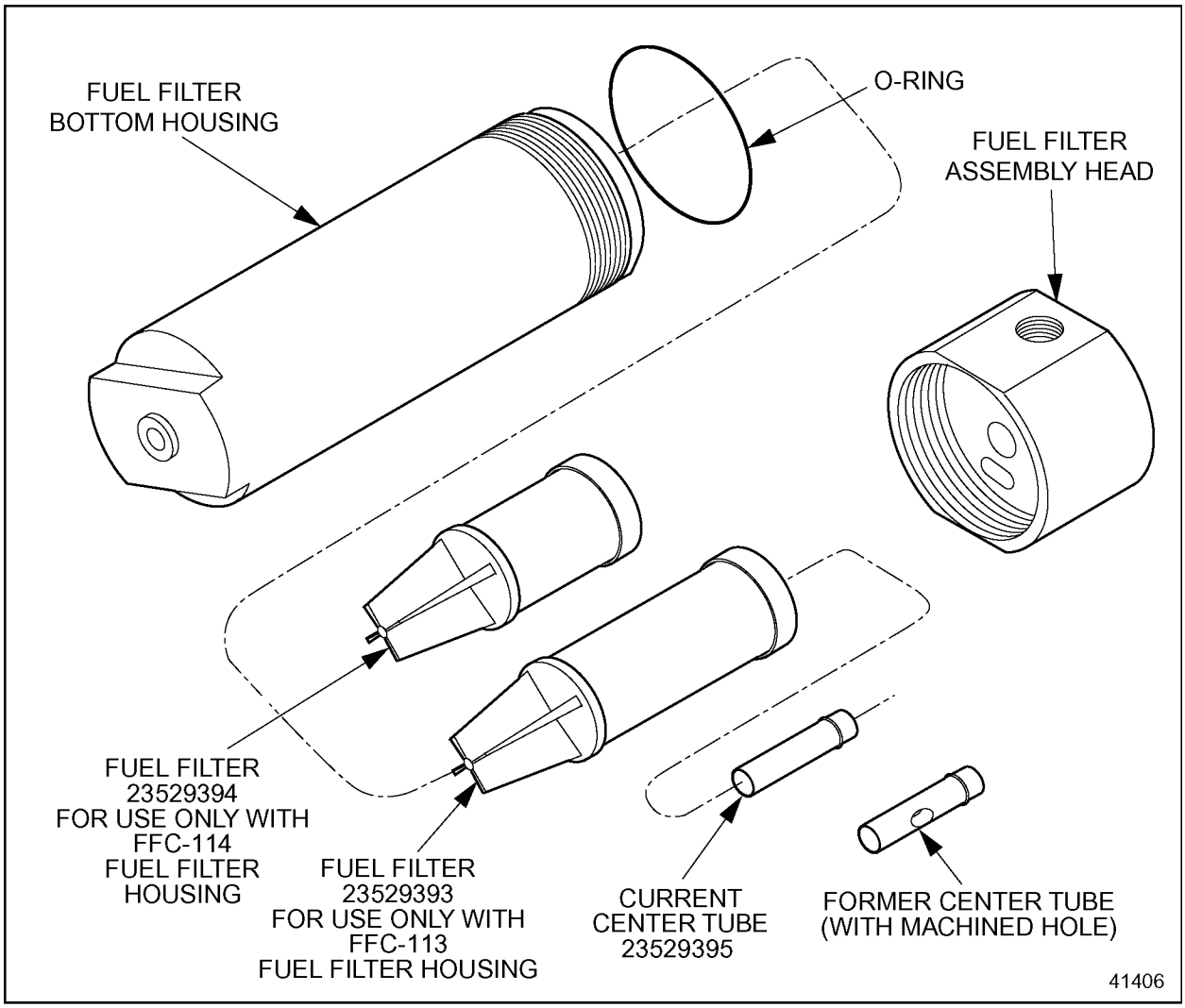

Note: Fuel filter seal is located on top of the fuel filter.

Figure 2-83 Current Fuel Filter Assemblies

2. Remove the two bolts from fuel filter housing head.

(Rev. 2004) *All information subject to change without notice.*
6SE483 0401 Copyright © 2004 DETROIT DIESEL CORPORATION

NOTICE:
Ensure the handle rests on the outer edge of the filter head to avoid damage to the threads.

3. Place a screwdriver or equivalent tool with a soft handle through the bypass holes in the center tube. See Figure 2-84.

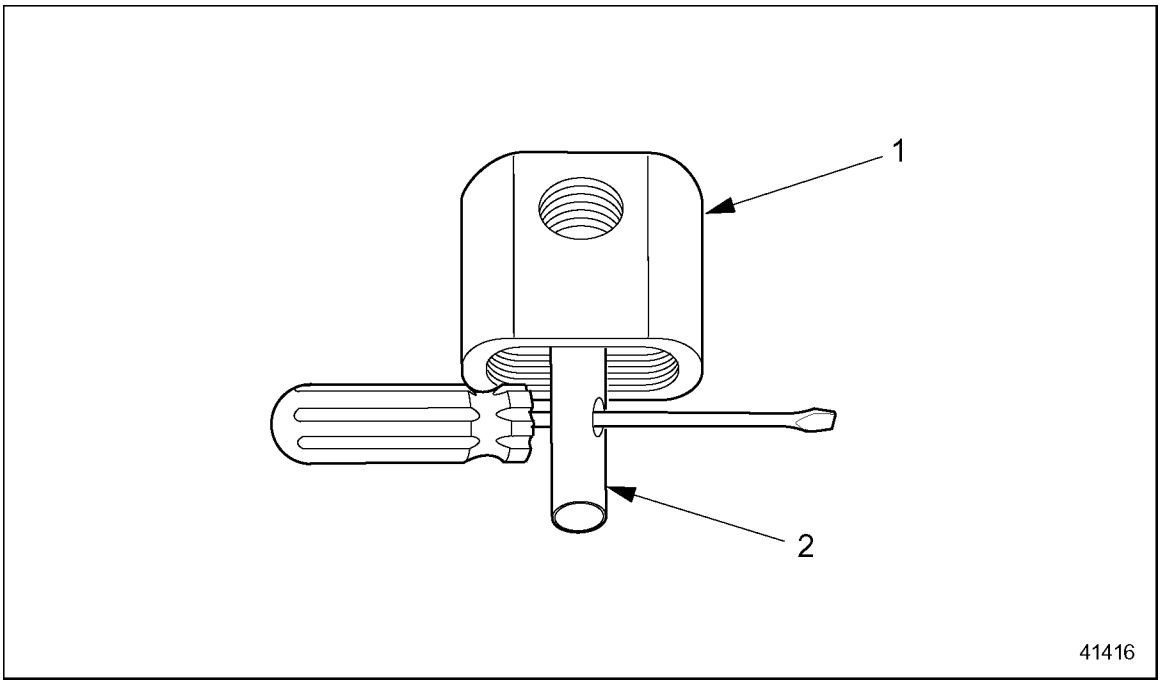

1. Filter Housing Head
2. Former Center Tube

Figure 2-84 Removal of Former Center Tube

4. Remove the center tube by gently tapping the metal end of the screwdriver, down away from the filter head.

NOTE:
Discard bypass spring and former center tube with holes.

 Copyright © 2004 DETROIT DIESEL CORPORATION

2.14.2.1 Inspection of Fuel Filter for the Series 60G Engine

Inspect the fuel filter as follows:

1. Inspect the inside of the fuel filter for dirt, debris, foreign objects.
   [a] If dirt, debris, foreign objects are found; replace the fuel filter.
   [b] If no damage if found, reuse the fuel filter.

NOTE:
Oil saturation on the outside of the fuel filter is a NORMAL condition of the oil coalescing process.

2. Inspect the fuel filter seal on the fuel filter.
   [a] If the fuel filter seal is worn, ripped, torn; replace the fuel filter.
   [b] If no damage is found on the fuel filter seal ; reuse the fuel filter.

(Rev. 2004) *All information subject to change without notice.*
6SE483 0401 Copyright © 2004 DETROIT DIESEL CORPORATION

2.14.3 Installation of Fuel Filter for the Series 60G Engine

NOTICE:

The fuel filter is directional. Gas from the regulator must be plumbed to the fuel filter inlet port and from the fuel filter outlet port to the compuvalve. This provides proper filtration.

CAUTION:

To avoid injury from an explosion of natural gas, the following precautions must be taken:

- **Do not smoke when installing or servicing the engine or fuel system.**
- **Installation or servicing of natural-gas equipment must only be conducted in well-ventilated, natural gas compatible areas. Do not install or service equipment in an enclosed area where ignition sources are present without first ensuring that an undetected gas leak may be safely vented without being ignited.**
- **Bleed natural gas lines before installing or servicing any component connected to the fuel lines.**
- **Natural gas fuel systems are pressurized. Relieve pressure from any fuel system component prior to installation or service of that component.**
- **Use a combustible-gas detector. Liquefied natural gas (LNG) is odorless and cannot be detected by smell. Compressed Natural gas (CNG) may be odorless and may not be detected by smell.**
- **Equipment fuel systems are the responsibility of the Original Equipment Manufacturer (OEM). Equipment fuel system guidelines must be closely adhered to when installing or servicing equipment. Refer to OEM guidelines specifying which maintenance procedures require venting of fuel lines and fuel tanks.**
- **LNG systems are pressurized and contain extremely cold (-260°F [-162°C]) fluids. Contact the fuel supplier or OEM for LNG safety requirements. Contact with LNG may cause personal injury (freezing).**
- **Vent systems on the equipment should be ducted to a safe area whenever equipment is in an enclosed area.**

Natural gas is highly flammable and explosive and may be extremely cold (-260°F [-162°C]).

 Copyright © 2004 DETROIT DIESEL CORPORATION

Install the fuel filter as follows:

1. Place the fuel filter housing head on a flat surface facing up.
2. Insert new center tube in the center hole of the fuel filter housing head.

NOTE:
Use a press to push the center tube into the hole of the fuel filter housing head. Center tube should seat flush at rolled portion of tube.

3. Install fuel filter housing head on mounting bracket with the two bolts torque to 40.67–47.45 N·m (30–35 lb·ft).
4. Install correct fuel filter element into fuel filter housing head.

NOTE:
Ensure that the correct fuel filter is being used with the correct fuel filter housing unit. FFC-113 and FFC-114 are *not* interchangeable. Fuel filter 23529393 cannot be used in the FFC-114 fuel filter housing; and fuel filter 23529394 cannot be used in the FFC-113 fuel filter housing. Fuel filter assemblies are listed in Table 2-5.

Fuel Filter Housing	**Former Fuel Filter Part Number**	**Current Fuel Filter Part Number**
FFC-113	23528074	23529393*
FFC-114	23528074	23529394*

* A new center tube (P/N 23529395) *must* be installed on the current FFC-113 and FFC-114 fuel filters. Discard former center tube with hole.

Table 2-5 Former and Current Part Numbers for the Fuel Filter Center Tube

5. Insert the O-ring and install bottom fuel filter housing and torque to 33.90–47.45 N·m (25–35 lb·ft).
6. Pressurize fuel system.
7. Refer to section 2.43.3 a for leak checking procedure.

(Rev. 2004) *All information subject to change without notice.*
6SE483 0401 Copyright © 2004 DETROIT DIESEL CORPORATION

2.15 FUEL COOLER (HEAT EXCHANGER-COOLED MARINE ENGINE)

The Series 60 heat exchanger-cooled marine engine uses a tube-and-shell style fuel cooler mounted with connector hoses and clamps on the inlet side of the raw water pump. See Figure 2-85. The fuel cooler is a brazed assembly and cannot be disassembled. It should be removed and inspected for plugging and damage once a year and replaced every four years, regardless of apparent condition. Replace sooner if severe plugging or damage is indicated.

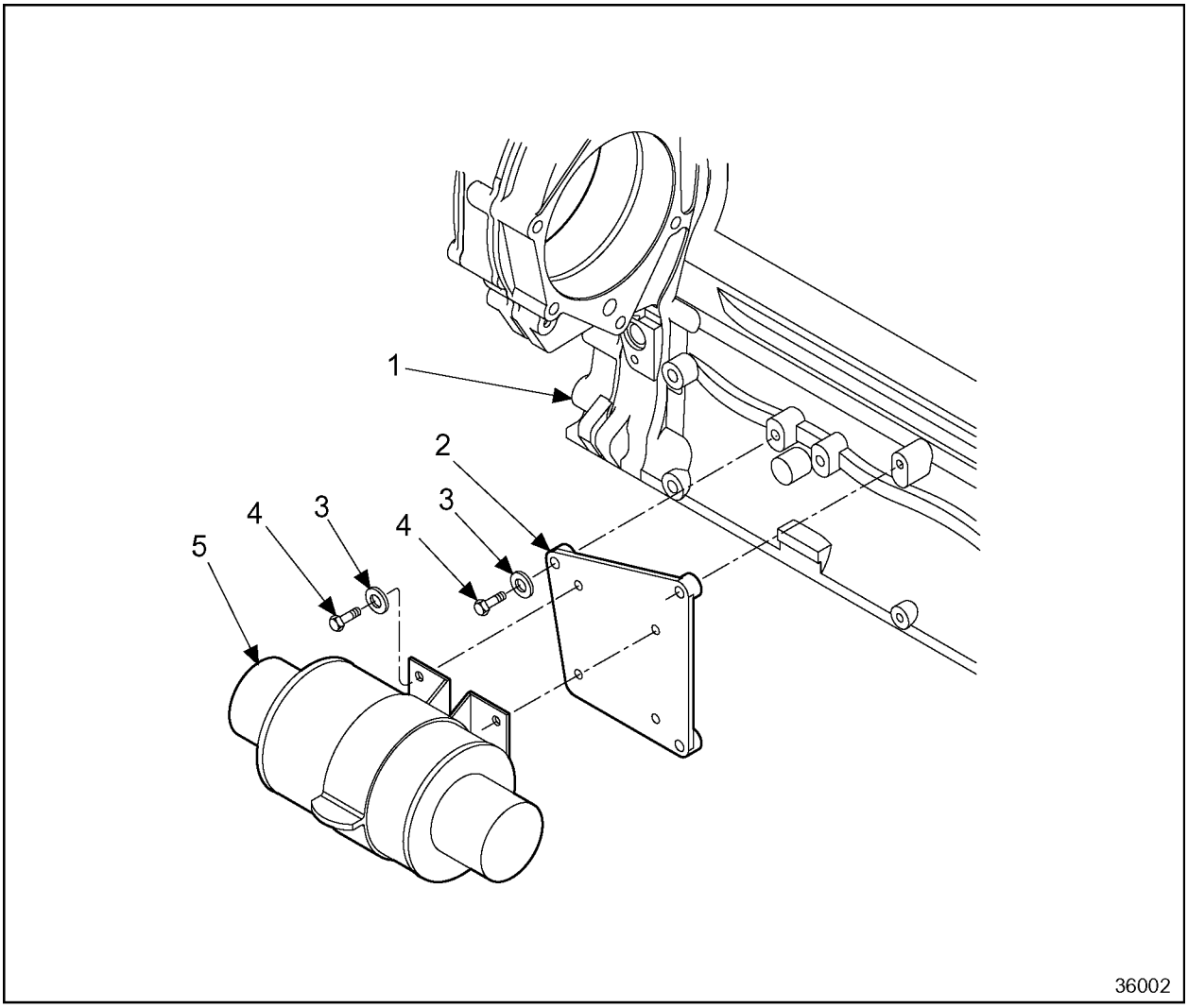

1. Engine Block
2. Mounting Plate
3. Washer
4. Bolt
5. Fuel Cooler

Figure 2-85 Fuel Cooler Location

 Copyright © 2004 DETROIT DIESEL CORPORATION

NOTICE:
Failure to inspect the fuel cooler for plugging or replace it when required may lead to restricted coolant flow and high fuel temperatures, which could result in loss of power and inefficient engine operation.

2.15.1 Removal of the Fuel Cooler

Remove the fuel cooler as follows:

1. With the engine at ambient temperature, place a suitable container under the heat exchanger and drain the raw water from the heat exchanger tank. Discard the raw water.
2. Close the shutoff valves located on the fuel inlet and outlet lines attached to the fuel cooler. Mark the lines for easy reinstallation.
3. With a suitable container placed under the fuel cooler to catch any dripping, carefully remove the lines from the fuel cooler fittings. Cap the lines to prevent any contamination of the fuel.
4. Loosen the hose clamps holding the fuel cooler to the raw water pump inlet elbow.
5. Loosen the hose clamps holding the fuel cooler to the raw water supply line.
6. With the cooler properly supported, remove the fuel cooler from the bracket holding it to the block, slide it off the connector hoses, and carefully pull it away from the engine.

(Rev. 2004) *All information subject to change without notice.*
6SE483 0401 Copyright © 2004 DETROIT DIESEL CORPORATION

2.15.1.1 Inspection of the Fuel Cooler

Inspect the fuel cooler as follows:

1. Inspect the cooler shell for dents, fuel or water leaks, and fuel inlet or outlet fitting damage. A fuel cooler showing obvious signs of damage should not be reused.
2. If no obvious signs of damage, inspect the cooler tubes for plugging. If tubes are not plugged, proceed to step 3. If tubes are plugged, remove plugging as follows:
   [a] Circulate a cleaning solvent such as Powercool® 2001 On-Line Cleaner, or equivalent, through the tubes. Carefully rod out the tubes with a bore brush, and flush out any loosened material with clean, fresh water.

CAUTION:

To avoid injury from flying debris when using compressed air, wear adequate eye protection (face shield or safety goggles) and do not exceed 40 psi (276 kPa) air pressure.

   [b] Drain all water from the fuel cooler and blow dry with compressed air.
3. Pressure check fuel cooler as follows:
   [a] Block water outlet with hose, end cap, and clamps.
   [b] Block water inlet with hose, end cap modified with pressure valve, and clamps.
   [c] Fill cooler tubes with clean fuel.

CAUTION:

To avoid injury from flying debris when using compressed air, wear adequate eye protection (face shield or safety goggles) and do not exceed 40 psi (276 kPa) air pressure.

   [d] Apply 207 kPa (30 lb·in^2) air pressure to pressure valve on water inlet.
   [e] If pressure leak down or no bubbles in the fuel occur, replace fuel cooler.
   [f] If no pressure leakdown or no bubbles occur in the fuel, reuse fuel cooler.

 Copyright © 2004 DETROIT DIESEL CORPORATION

2.15.2 Installation of the Fuel Cooler

Install the fuel cooler as follows:

1. Attach the fuel cooler securely to the mounting bracket on the block, ensuring the cooler inlet and outlet openings are properly oriented.
2. Slide the connector hoses from the raw water pump inlet elbow and the raw water supply line onto the cooler openings and tighten the hose clamps.
3. Install fuel inlet and outlet lines to the cooler.

CAUTION:

Diesel engine exhaust and some of its constituents are known to the State of California to cause cancer, birth defects, and other reproductive harm.

- ☐ **Always start and operate an engine in a well ventilated area.**
- ☐ **If operating an engine in an enclosed area, vent the exhaust to the outside.**
- ☐ **Do not modify or tamper with the exhaust system or emission control system.**

4. Prime the raw water pump and prime the fuel system. Start the engine and check for raw water or fuel leaks.

(Rev. 2004) *All information subject to change without notice.*
6SE483 0401 Copyright © 2004 DETROIT DIESEL CORPORATION

2.16 ASSEMBLY FUEL FILTER AND WATER SEPARATOR

The fuel filter and water separator assembly facilitates the settling of water in a collection bowl. See Figure 2-86.

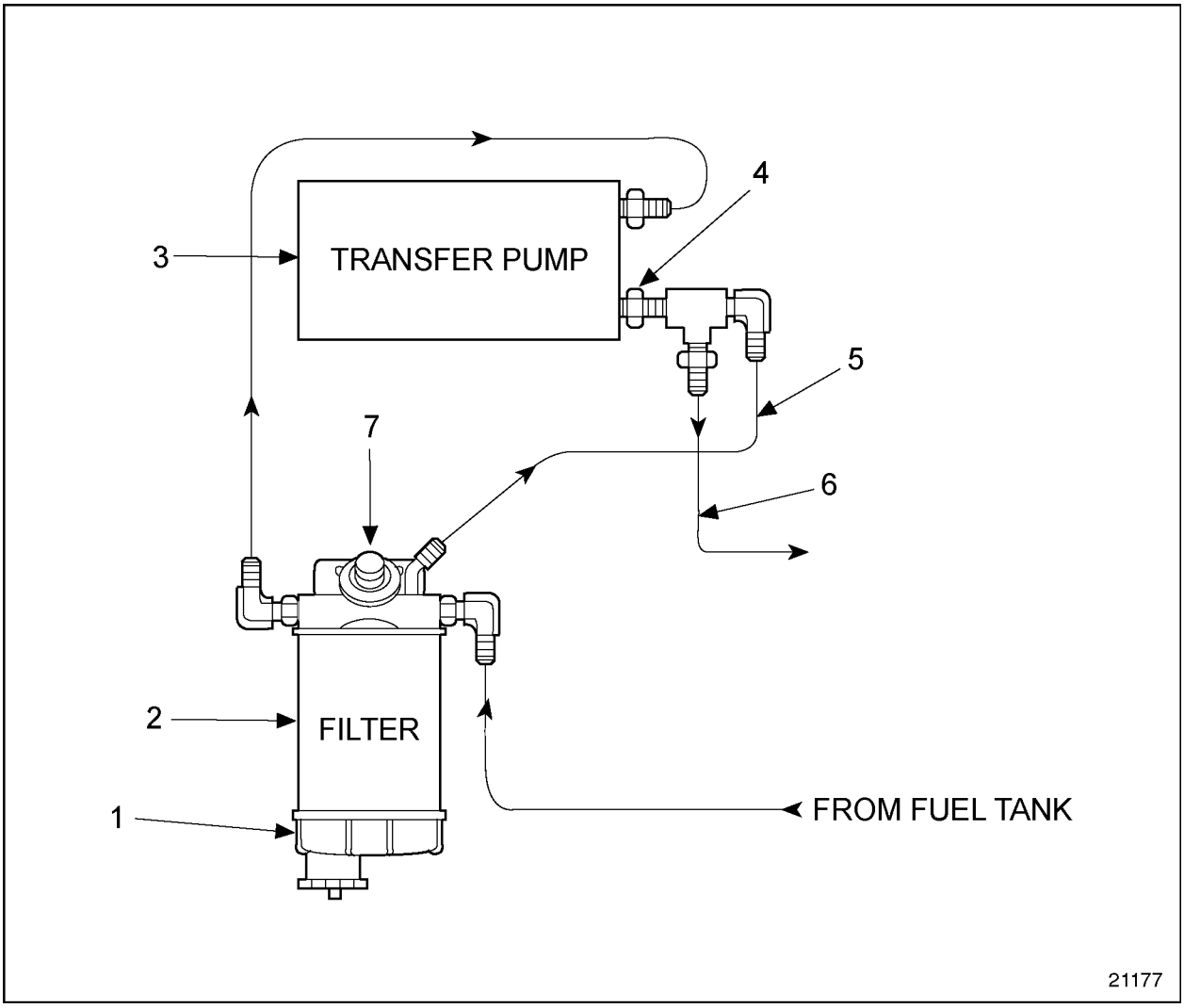

1. Collection Bowl
2. Spin-on Element
3. Priming Pump
4. Reducer Bushing
5. Filter Head to Transfer Pump Hose
6. Hose to Secondary Fuel Filter

Figure 2-86 Typical Fuel Filter and Water Separator Installation

 Copyright © 2004 DETROIT DIESEL CORPORATION

2.16.1 Replacement of Fuel and Water Separator Element

Use the following procedure:

1. Drain off some fuel by opening the drain valve on the collection bowl. Close the valve.
2. Remove the element and bowl together, then remove the bowl from the element. Clean the bowl and the O-ring gland.
3. Apply a coating of clean fuel or grease to the new O-ring and element seal. Spin the bowl onto the new element and them spin the assembly onto the filter head by hand until snug. Do not use tools to tighten.
4. To eliminate air from the filter, operate the primer pump until the fuel purges at the filter assembly.

CAUTION:

Diesel engine exhaust and some of its constituents are known to the State of California to cause cancer, birth defects, and other reproductive harm.

- ☐ **Always start and operate an engine in a well ventilated area.**
- ☐ **If operating an engine in an enclosed area, vent the exhaust to the outside.**
- ☐ **Do not modify or tamper with the exhaust system or emission control system.**

5. Start the engine and check for fuel leaks. Correct any leaks with the engine shut off.

(Rev. 2004) *All information subject to change without notice.*
6SE483 0401 Copyright © 2004 DETROIT DIESEL CORPORATION

2.16.2 Fuel Return System Check Valve

The purpose of the check valve is to reduce the risk of fuel prime loss and fuel siphoning from the head when the fuel filter is removed. See Figure 2-87.

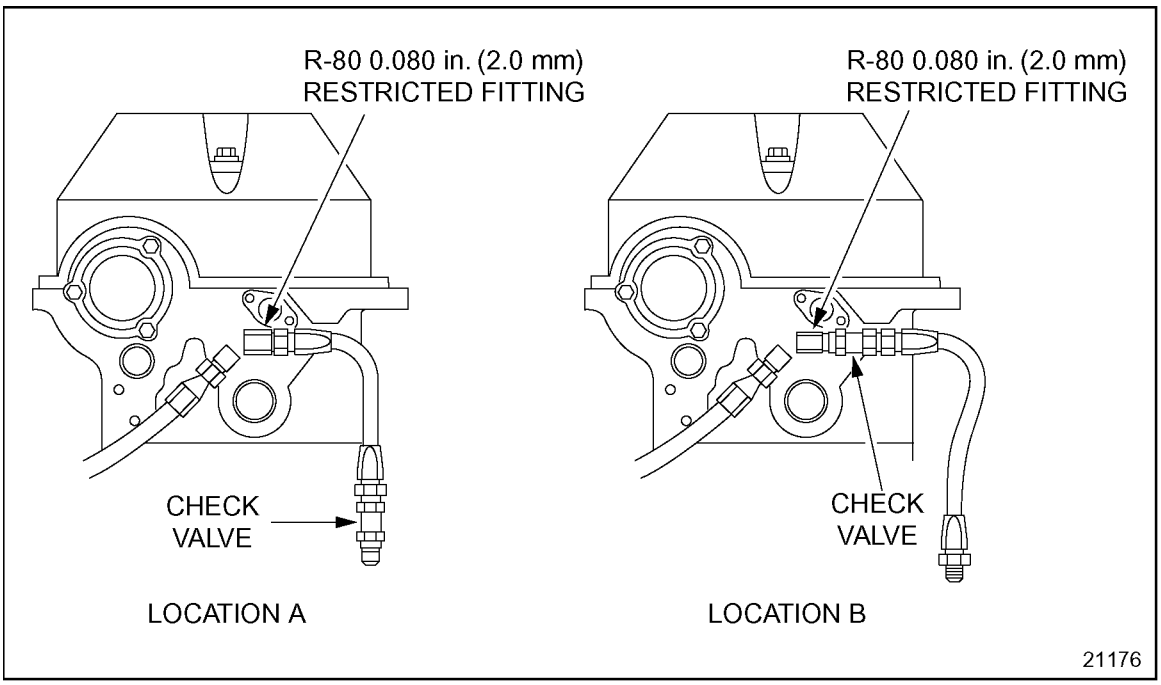

Figure 2-87 Typical Fuel Return Check Valve Locations

NOTICE:
The check valve must be included in the fuel system. If the check valve is removed for any reason or found to be defective, a new valve must be installed and the fuel system primed before start-up. The R-80 — 0.080 in. (2.0 mm) restricted fitting (elbow connector) which is ahead of the check valve must also be included in the fuel system.

NOTICE:
Do not increase the size of the orifice in restricted fittings. Increasing restricted fittling hole size can cause injector caviation, resulting in reduced durability of injectors and other engine components, and increased engine emissions.

A check valve is connected to a hose in the fuel return line coming from the rear of the cylinder head or at the cylinder head restricted fitting, depending on individual installation requirements. See Figure 2-87.

 Copyright © 2004 DETROIT DIESEL CORPORATION

2.16.3 Removal of PRO-CHEK Fuel System Check Valve

Remove the valve as follows:

NOTICE:
The PRO-CHEK fuel system check valve is installed after the secondary filter. Any dirt or debris entering the fuel system at this point may cause severe injector damage.

1. Clean the area around the PRO-CHEK®valve thoroughly to remove loose dirt or debris.
2. Disconnect the fuel supply and return lines from the bottom of the valve and cap the hoses immediately to prevent the entrance of dirt.
3. Disconnect the air purge line from the top elbow on the valve and cap the line to prevent the entrance of dirt.
4. Remove the valve and bracket assembly from the engine as follows:
   [a] If rear mounted, remove the two 12 mm bolts securing the valve to the rear lifter bracket.
   [b] If side mounted, remove the two 10 mm bolts and spacers holding the valve to the cylinder head.

2.16.3.1 Inspection of the PRO-CHEK Fuel System Check Valve

Inspect the PRO-CHEK fuel system check valve as follows:

1. Visually inspect exterior casing of the PRO-CHEK valve for cracks, leaks, or other signs of damage.
   [a] If the PRO-CHEK valve has no cracks, leaks, or other signs of damage, reuse the valve.
   [b] If the PRO-CHEK valve has cracks, leaks, or other signs of damage, replace the valve.

(Rev. 2004) *All information subject to change without notice.*
6SE483 0401 Copyright © 2004 DETROIT DIESEL CORPORATION

2.16.4 Installation of PRO-CHEK Fuel System Check Valve

The PRO-CHEK fuel system check valve is an optional item that, when properly installed, removes air from the fuel supply line between the secondary filter and the cylinder head. No priming is required even after filter change, since any air that may get into the lines is automatically removed when it reaches the PRO-CHEK valve.

Install the PRO-CHEK valve as follows:

1. Mount the PRO-CHEK valve on the side or rear of the Series 60 engine.
   [a] If side-mounted, install with two 10 mm bolts and spacers. The location may be ahead of or behind the location shown. See Figure 2-88.

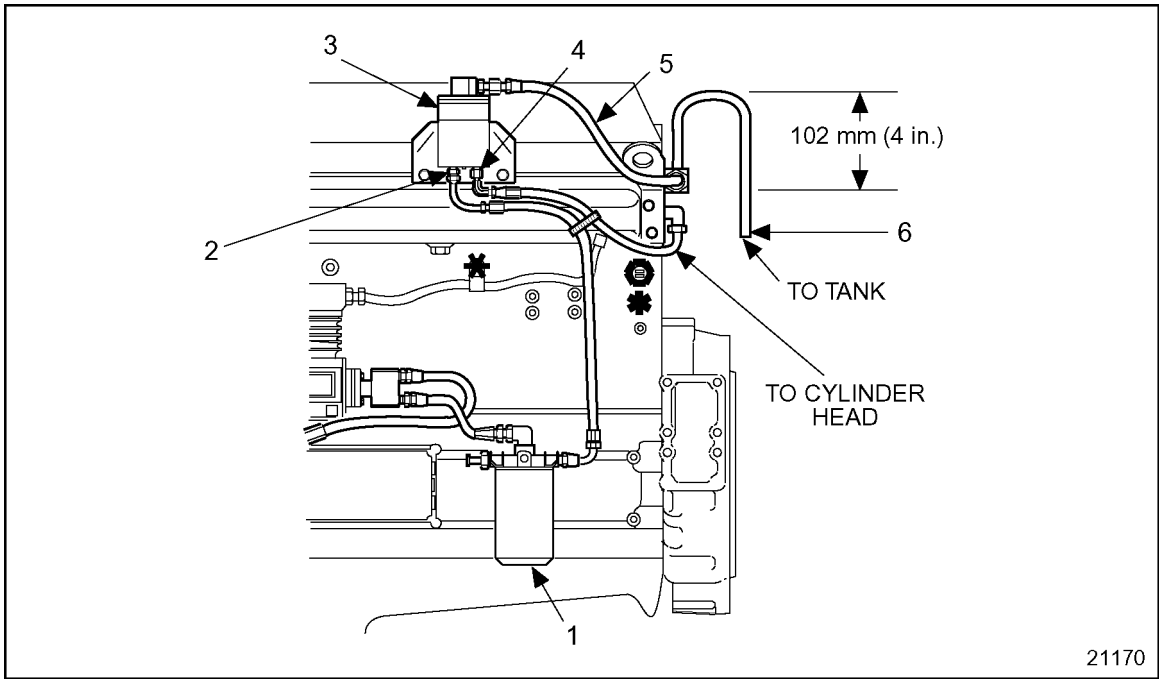

1. Secondary Fuel Filter
2. Fuel Inlet
3. PRO-CHEK Valve
4. Air Purge Line
5. Fuel Outlet
6. Fuel Spill Line

Figure 2-88 Typical Side-mounted PRO-CHEK Installation

 Copyright © 2004 DETROIT DIESEL CORPORATION

[b] If rear-mounted remove the two 12 mm bolts holding the rear lifter bracket and install the PRO-CHEK valve against the bracket with two 12 mm bolts that are 5 mm (approximately 0.20 in.) longer and two spacers. See Figure 2-89.

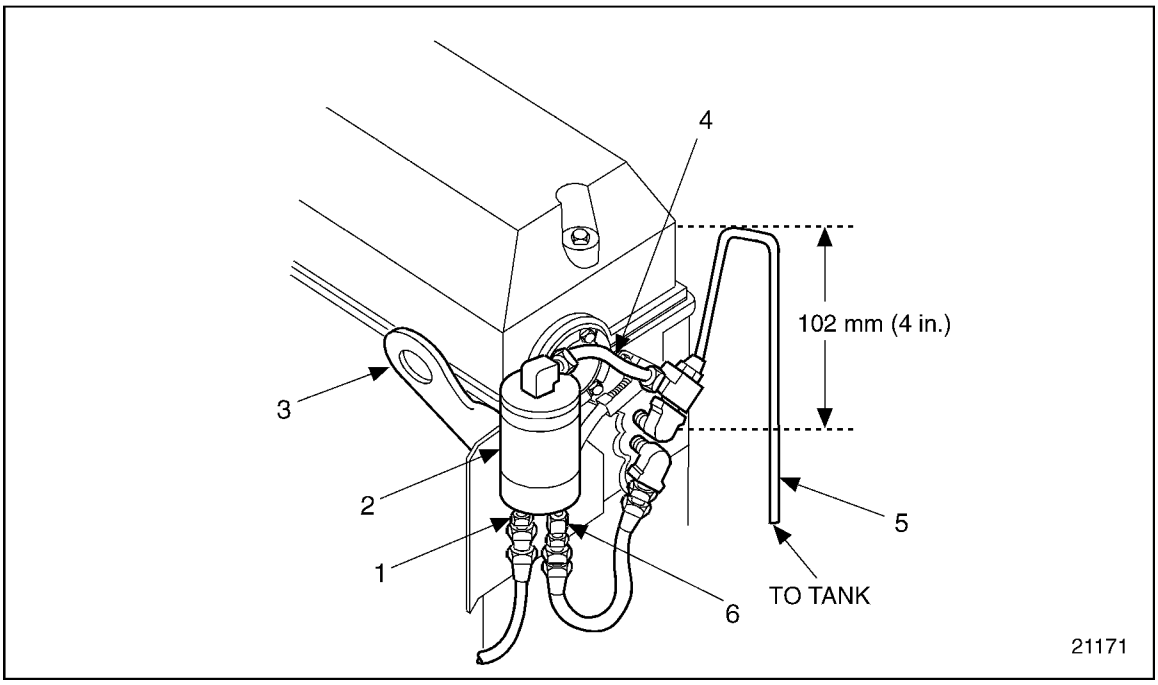

1. Fuel Inlet
2. PRO-CHEK Valve
3. Engine Lifter Bracket
4. Air Purge Line
5. Fuel Spill Line
6. Fuel Outlet

Figure 2-89 Typical Rear-mounted PRO-CHEK Installation

2. Disconnect the fuel supply hose assembly at the rear of the engine and reconnect it to the PRO-CHEK 3/8 in. SAE flared bottom fitting marked with the words *Fuel In.*
3. Connect a separate fuel hose assembly to the 1/4 in. 18 NPTF PRO-CHEK female bottom fitting marked with the words *Fuel Out*. Install the other end in the fuel manifold inlet port at the rear of the engine.
4. An R80 2.03 mm (.080 in.) restricted fitting is installed in the fuel spill (return) opening in the cylinder head. Install a tee-fitting after the R80 spill fitting. The spill hose from this tee-fitting must be routed at least 4 in. (101.6 mm) above the fuel gallery. See Figure 2-88 and see Figure 2-89. Connect a 1/4 in. diameter fuel hose assembly to the elbow in the top port of the PRO-CHEK. Route this air purge hose to the spill tee— fitting.
5. Tie-wrap the PRO-CHEK inlet and outlet fuel lines to prevent chafing and/or contact with metal parts.
6. Prime the fuel system.
7. Refer to section 2.16.1 for the exhaust caution before preceeding. Start the engine and check for leaks.

(Rev. 2004) *All information subject to change without notice.*
6SE483 0401 Copyright © 2004 DETROIT DIESEL CORPORATION

The PRO-CHEK valve is fully assembled and ready to install when received. If the *Fuel In* or *Fuel Out* fittings are accidentally loosened or removed for any reason, they must be reinstalled in their proper locations as follows:

- ☐ The male fitting with the long, solid pipe is installed in the fuel in port. See Figure 2-90.
- ☐ The female fitting with the short, perforated pipe is installed in the fuel out port. See Figure 2-90.

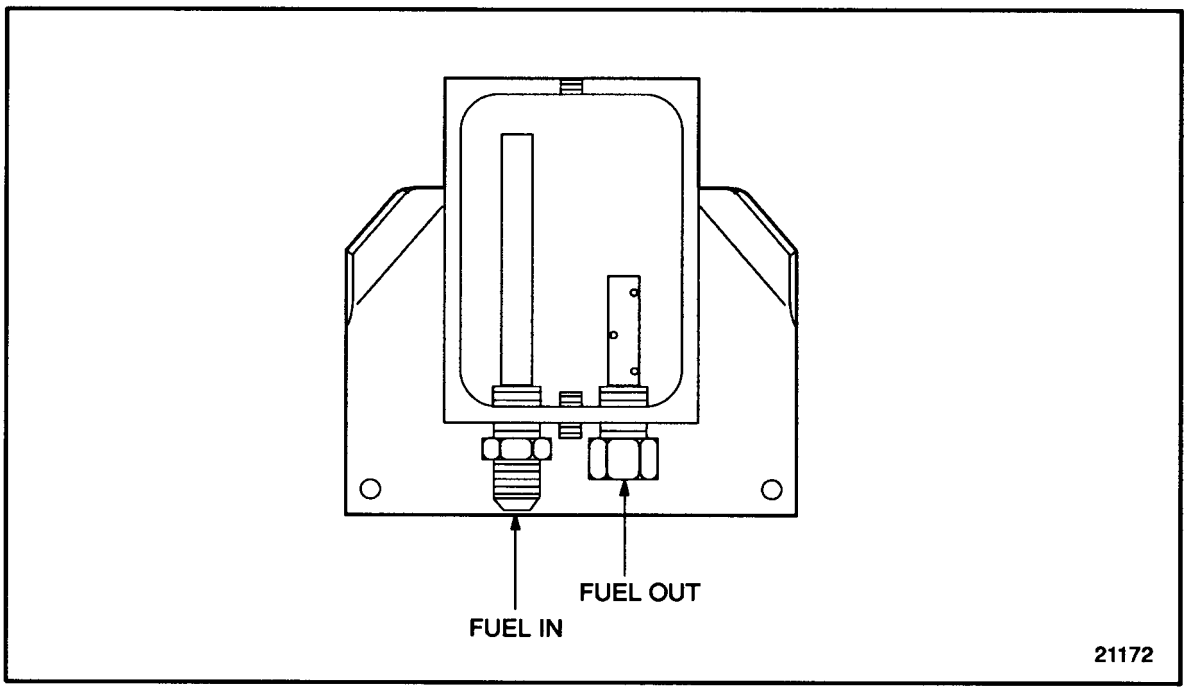

Figure 2-90 PRO-CHEK Valve Cutaway View

 Copyright © 2004 DETROIT DIESEL CORPORATION

NOTICE:

Fittings must remain clean when installed, since anything that gets inside the PRO-CHEK valve will be carried into the fuel manifold and may damage the injectors.

NOTICE:

Do not overtighten the *Fuel In* or *Fuel Out* fittings or the top elbow, since this may damage the threads on the fittings or the PRO-CHEK body, resulting in fuel leaks. If fitting or body threads are damaged, the complete assembly *must* be replaced.

1. Thread the inspected, clean dry fittings into the valve body for a few turns.

NOTICE:

Do not use Teflon® pipe sealant tape on the male pipe fittings, since this may flake off into the fuel system and damage the injectors.

2. Apply a light coating of pipe sealant with Teflon to the visible male threads.
3. Torque the *Fuel In* fitting and top elbow to 14-19 N·m (10-14 lb·ft).
4. Torque the *Fuel Out*fitting to 19-24 N·m (14-18 lb·ft).

(Rev. 2004) *All information subject to change without notice.*
6SE483 0401 Copyright © 2004 DETROIT DIESEL CORPORATION

2.17 ELECTRONIC ENGINE CONTROL

The Detroit Diesel Electronic Control System (DDEC) controls fuel injection timing and output by the electronic unit injectors (EUI) on the Series 60 Diesel engine. DDEC controls throttle, gas valve and the ignition system on the Series 60G engine. The system also monitors several engine functions using electrical sensors which send electrical signals to the Electronic Control Module (ECM). The ECM then computes the incoming data and determines the correct fuel output and timing for optimum power, fuel economy and emissions. The ECM also has the ability to display warnings or shut down the engine completely (depending on option selection) in the case of damaging engine conditions, such as low oil pressure, low coolant, or high oil temperature.

Early Series 60 engines have the DDEC system called DDEC I. Later Series 60 engines have the 2nd generation DDEC system called DDEC II. See Figure 2-91. The current engines have the third generation DDEC system, DDEC III/IV.

Series 60 2004 Exhaust Gas Recirculation (EGR) engines will use the fifth generation of the DDEC system, DDEC V® Electronic Control Unit. See Figure 2-92.

The replacement of DDEC components is based on indicated diagnostic codes leading to faulty components. Check the *Detroit Diesel Single ECM Troubleshooting Manual* (6SE497) for more complete information on diagnosis of components and system problems.

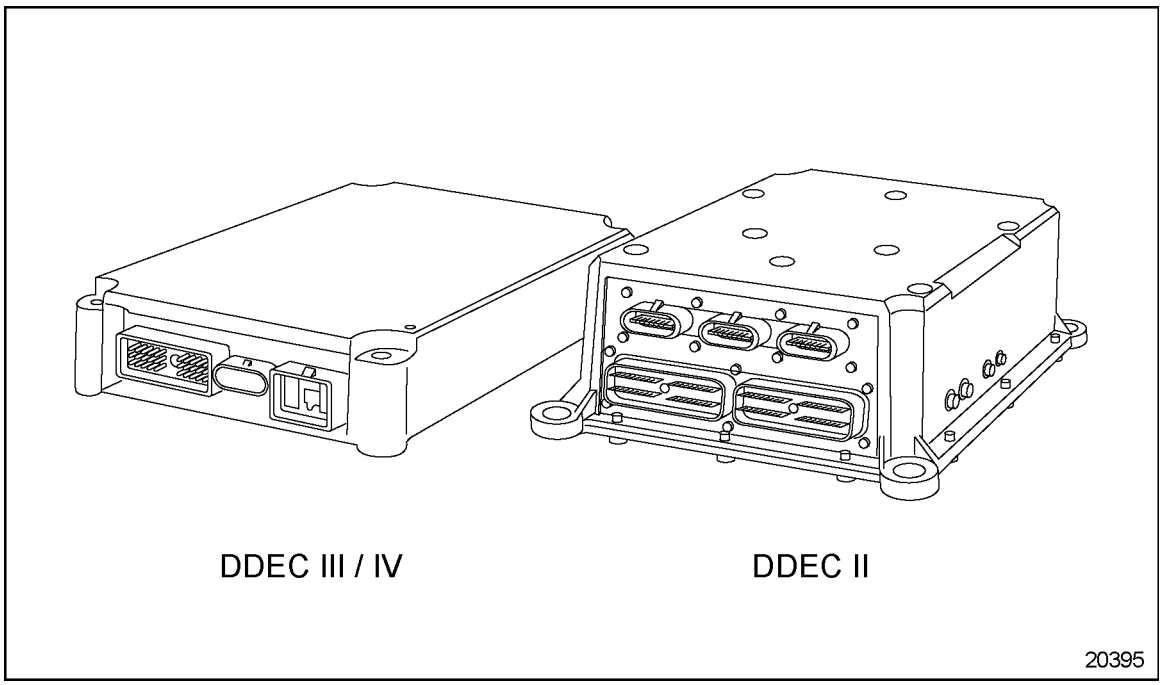

Figure 2-91 DDEC III/IV and DDEC II Electronic Control Module (ECM)

 Copyright © 2004 DETROIT DIESEL CORPORATION

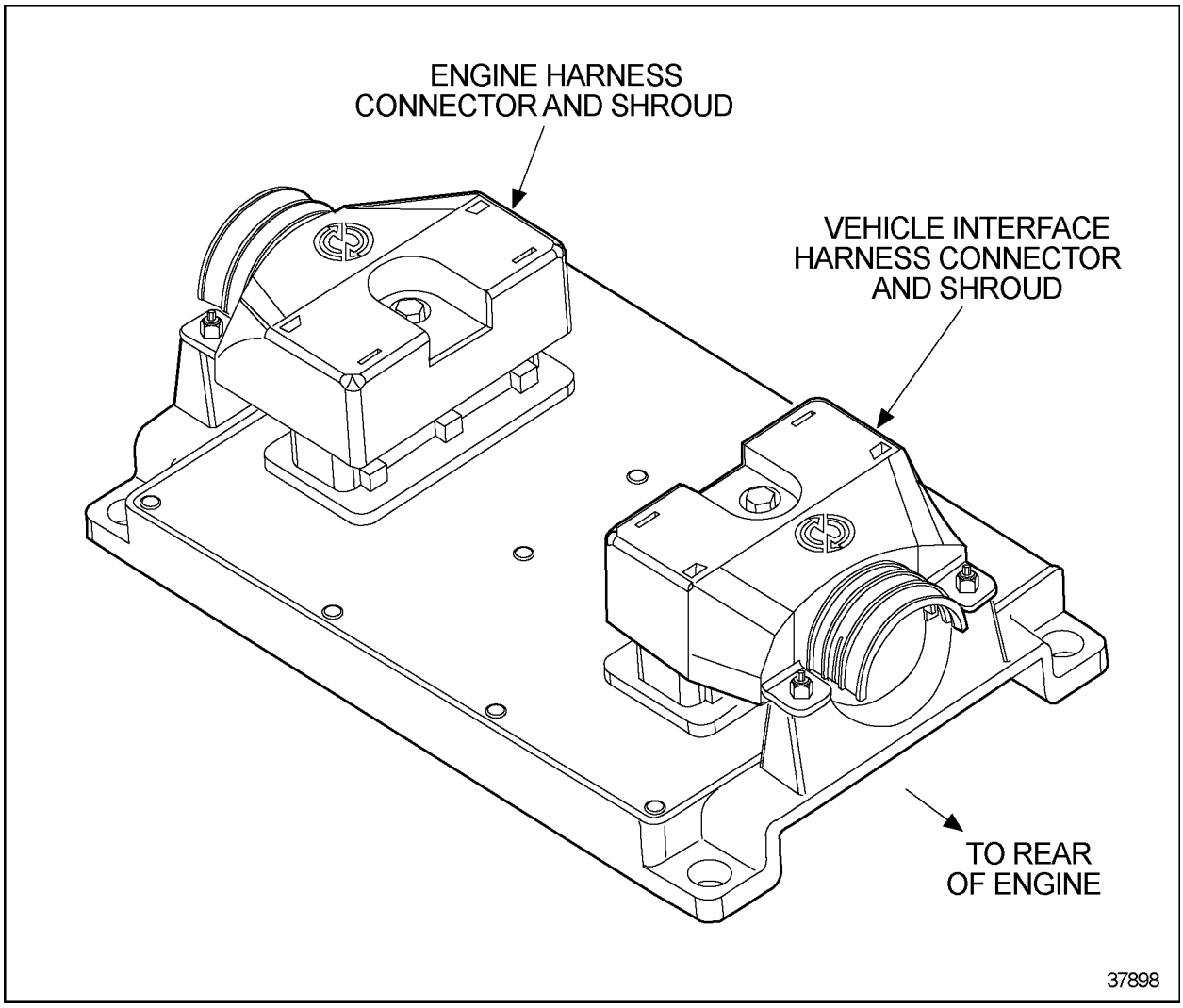

Figure 2-92 DDEC V Electronic Control Unit

(Rev. 2004) *All information subject to change without notice.*
6SE483 0401 Copyright © 2004 DETROIT DIESEL CORPORATION

2.18 DDEC V ELECTRONIC CONTROL UNIT

DDEC V provides an indication of engine and vehicle malfunctions. The ECU continually monitors the DDEC V system. See Figure 2-93.

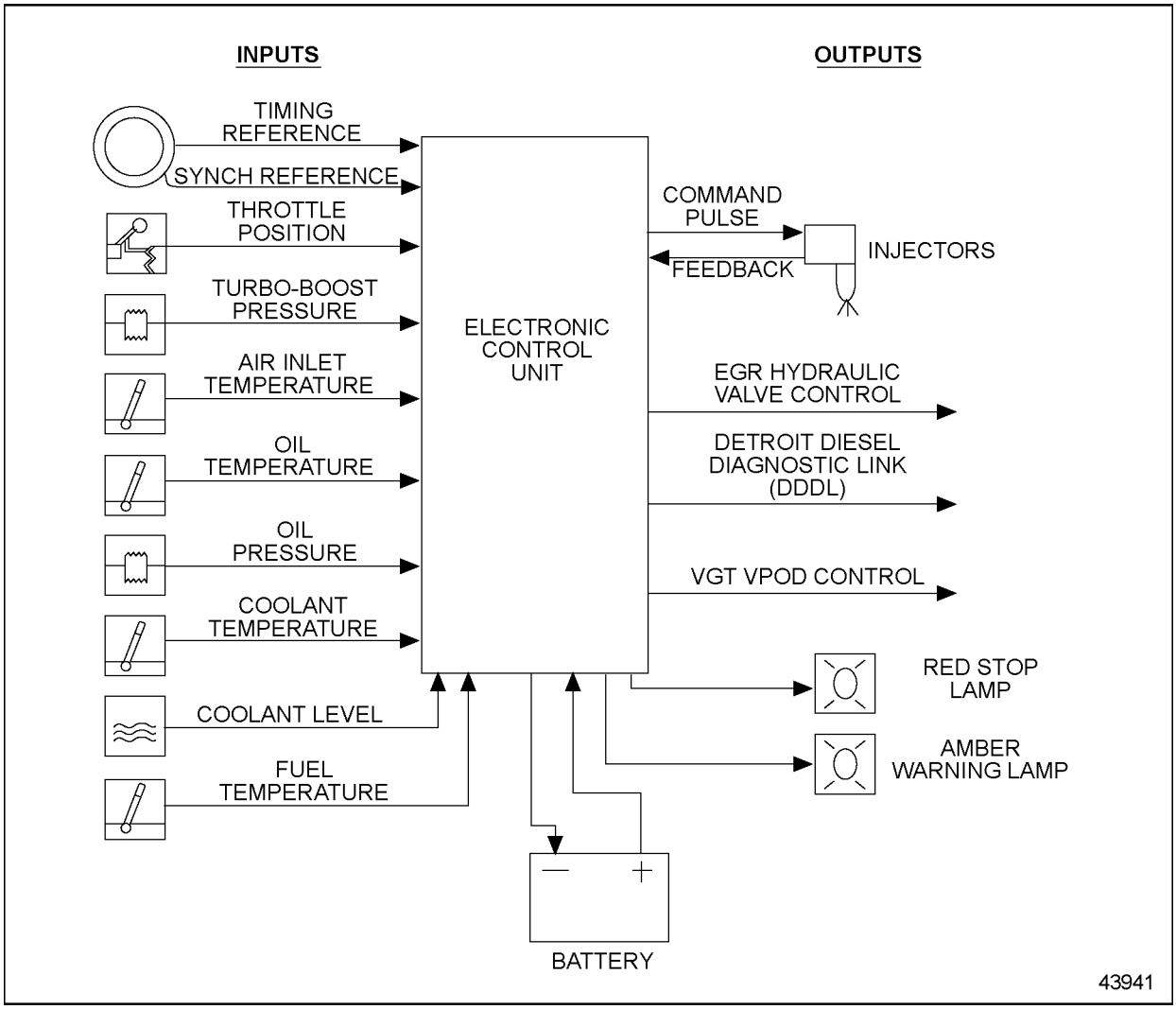

Figure 2-93 DDEC V System Series 60 Diesel Engine

 Copyright © 2004 DETROIT DIESEL CORPORATION

Any faults that occur are stored as codes in the ECU's memory. These codes can be accessed in any of three ways:

1. A DDDL® can be used to read the codes.
2. A personal computer (PC) connected to the ECM through a translator device which converts J1708 to RS232 protocol can be used.
3. The Amber Warning Lamp (AWL) or the Red Stop Lamp (RSL) is illuminated.
   - The AWL (panel mounted yellow indicator light) illuminated diagnose condition as soon as convenient.
   - The RSL (panel mounted red indicator light) and AWL illuminated, a major fault occurred and immediate attention required to avoid engine damage.
   - Automatic engine shutdown or rampdown is available as an option. A shutdown override switch is required to allow the vehicle to be moved to a safe location during automatic shutdown or rampdown.

The Detroit Diesel Diagnostic Link® (DDDL) is a sophisticated PC software package that requests and receives engine data and diagnostic codes. The Detroit Diesel Diagnostic Link® DDDL supports DDEC V and the Series 60 2004 engine. See Figure 2-94.

The DDDL functions are:

- Read and display current calibration for an ECU.
- Create a calibration for the ECU on an individual engine.
- Save a single calibration with an ECU password, this same password can be used for fleet of vehicles with the same password or technican who does not have access to the password.
- Change the engine rating of a vehicle.
- Set the injector calibration when you replace the injectors.
- View an audit trail of ECU and injector calibration changes.

(Rev. 2004) *All information subject to change without notice.*
6SE483 0401 Copyright © 2004 DETROIT DIESEL CORPORATION

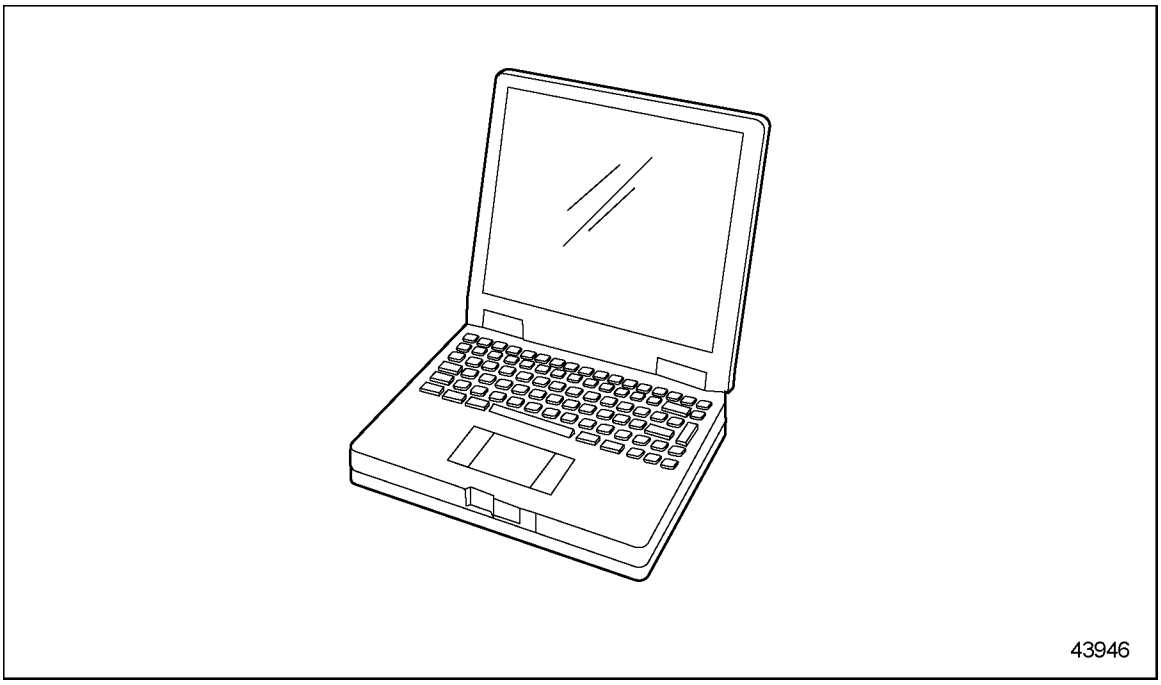

Figure 2-94 Detroit Diesel Diagnostic Link® (DDDL)

 Copyright © 2004 DETROIT DIESEL CORPORATION

The SAE Standard Communications of the DDEC V system are listed in Table 2-6. The fan control inputs and outputs for DDEC V are listed in Table 2-7. The engine brake control features of DDEC V are listed in Table 2-8. DDEC V can identify faulty components and other engine-related problems by providing the technician with a diagnostic code. Standard sensors are listed in Table 2-9. OEM installed sensors are listed in Table 2-10.

SAE Standard Communication
SAE J1587 protocol on J1708 hardware
Diagnostics
Electronic dashes
Data Hub
SAE J1922 protocol on J1708 hardware
Traction control systems
Transmission controls
SAE J1939 high speed data link
Vehicle controls

Table 2-6 SAE Standard Communications for DDEC V

Inputs	Outputs
Coolant temperature	Single on/off fan clutch
Oil temperature	Dual on/off fan clutch
Air temperatures	Two-speed single fan
Air conditioning	Modulated fan clutch

Table 2-7 Fan Controls for DDEC V

Engine Brake Control
Cruise Control with Engine Brake
Engine Brake Disable
Engine Brake Active
Engine Fan Braking
Clutch Release Input
Service Brake Control of Engine Brakes
Min. MPH for Engine Brakes

Table 2-8 Engine Brake Controls with DDEC V

(Rev. 2004) *All information subject to change without notice.*
6SE483 0401 Copyright © 2004 DETROIT DIESEL CORPORATION

DDEC V
Barometric Pressure Sensor (Baro Sensor)
Camshaft Position Sensor (CPM Sensor)
Crankshaft Position Sensor (CKP Sensor)
EGR Delta Pressure Sensor (EGR Delta Pressure)
EGR Temperature Sensor
Engine Coolant Temperature Sensor (ECT Sensor)
Engine Oil Level (EOL Sensor)
Engine Oil Pressure Sensor (EOP)
Engine Oil Temperature Sensor (EOT)
Fuel Restriction Sensor
Intake Air Temperature Sensor (IAT)
Intake Manifold Pressure Sensor (IMP)
Mass Air Flow Sensor
Supply Fuel Temperature Sensor (SFT Sensor)
Turbo Compressor Temperature Out Sensor
Turbo Speed Sensor (TSS)

Table 2-9 Standard Sensors for DDEC V

DDEC V
Accelerator Pedal Sensor (AP Sensor)
Add Engine Coolant Level Sensor (AECL Sensor)
Air Filter Restriction Sensor (AFR Sensor)
Engine Coolant Level Sensor (ECL)
Fire Truck Pump Pressure Sensor *
Turbo Compressor In Temperature Sensor
Vehicle Speed Sensor (VSS)

Table 2-10 OEM Installed Sensors

* Available in some applications

 Copyright © 2004 DETROIT DIESEL CORPORATION

2.18.1 Repair or Replacement of the DDEC V Electronic Control Unit

The DDEC V ECU is a sealed, nonserviceable unit. Tag defective ECU for recore.

2.18.2 Removal of the DDEC V Electronic Control Unit

Perform the following steps for ECU removal:

1. Remove screw from center of shroud and connector. Remove two nuts from threaded studs at the base of the shroud and ECU see Figure 2-95.
2. Remove shroud and connector from ECU.
3. Remove the two through-bolts, two nuts and two studs holding the ECU to the engine, remove the ECU from engine. See Figure 2-95.

2.18.3 Installation of the DDEC V Electronic Control Unit

Perform the following steps for ECU installation:

1. Inspect the ECU isolators for damage and replace if required.
2. Mount the ECU to the engine.
3. Secure the ECU to the engine with two through-bolts, two studs and nuts. Torque the ECU-to-engine bolts to 23-27 N·m (17-20 lb·ft).
4. Install the engine harness connector and shroud to the ECU. Torque center screw and two nuts to 5.6 N·m (50 in.· lb).

(Rev. 2004) *All information subject to change without notice.*
6SE483 0401 Copyright © 2004 DETROIT DIESEL CORPORATION

5. Turn the ignition to the "ON" position. Observe the DDDL for any diagnostic code(s). If any code(s) other than code 25 is logged, refer to the *Detroit Diesel DDEC V Single ECM Troubleshooting Manual* (6SE565).

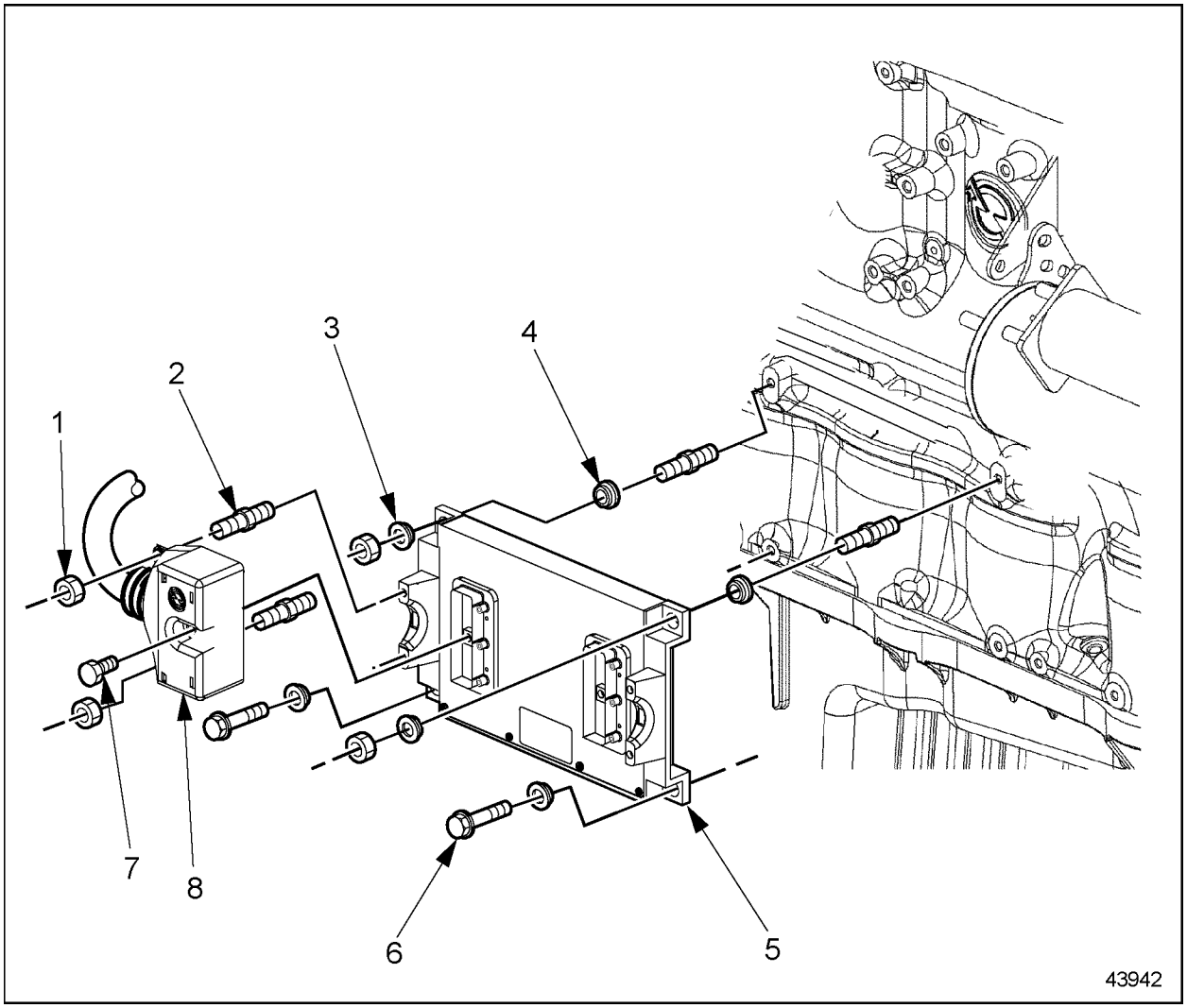

1. Nut
2. Stud
3. Isolater
4. Isolater
5. Electronic Control Unit
6. Bolt
7. Bolt
8. Shroud

Figure 2-95 DDEC V Electronic Control Unit and Related Parts

 Copyright © 2004 DETROIT DIESEL CORPORATION

⚠ CAUTION:

Diesel engine exhaust and some of its constituents are known to the State of California to cause cancer, birth defects, and other reproductive harm.

- ☐ **Always start and operate an engine in a well ventilated area.**
- ☐ **If operating an engine in an enclosed area, vent the exhaust to the outside.**
- ☐ **Do not modify or tamper with the exhaust system or emission control system.**

6. Start the engine, and check for leaks.

(Rev. 2004) *All information subject to change without notice.*
6SE483 0401 Copyright © 2004 DETROIT DIESEL CORPORATION

2.19 DDEC III/IV ELECTRONIC CONTROL MODULE

DDEC III/IV provides an indication of engine and vehicle malfunctions. The ECM continually monitors the DDEC III/IV system. See Figure 2-96 and see Figure 2-97.

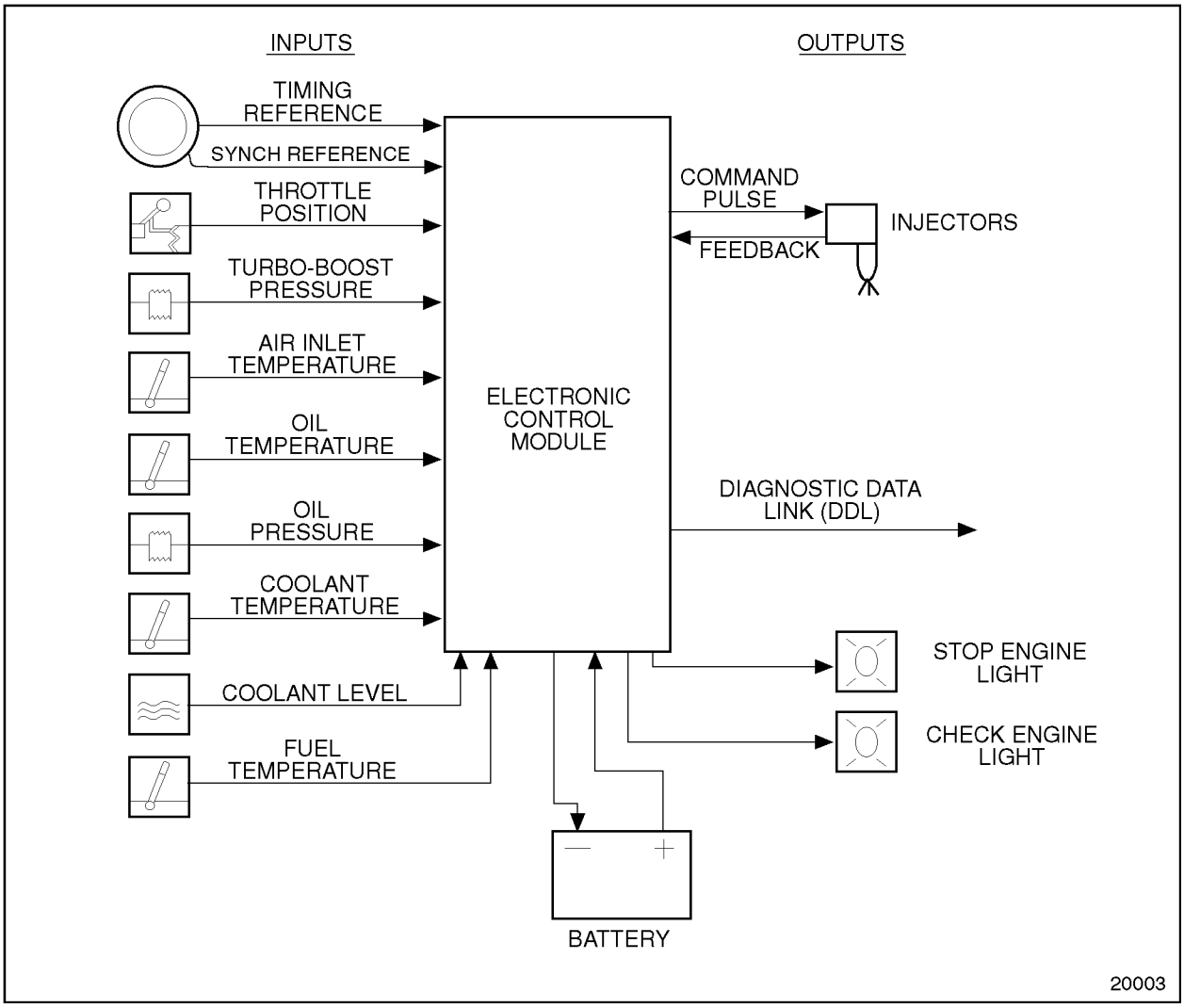

Figure 2-96 DDEC III/IV System Series 60 Diesel Engine

 Copyright © 2004 DETROIT DIESEL CORPORATION

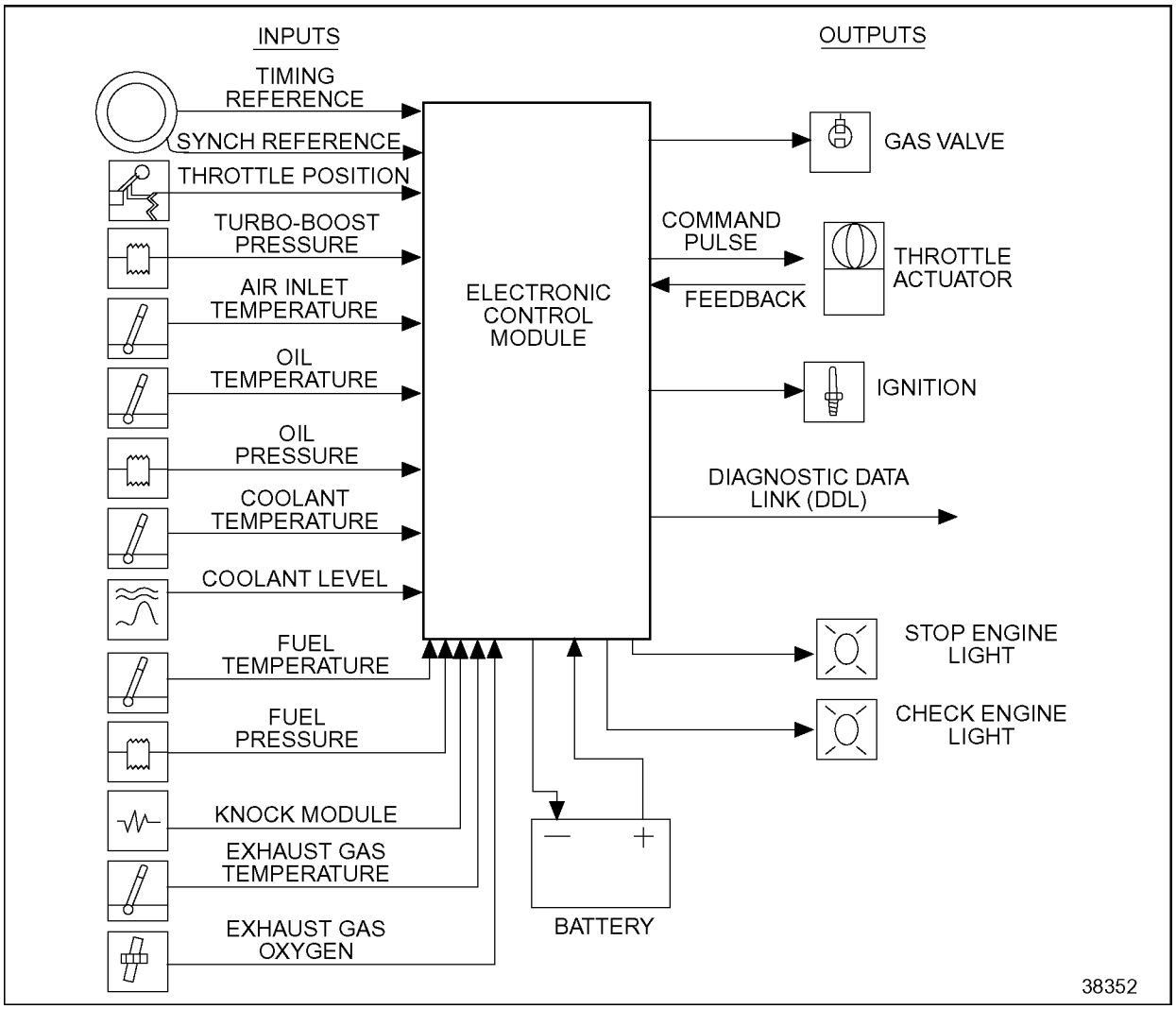

Figure 2-97 DDEC III/IV System Series 60 Natural Gas Engine

(Rev. 2004) *All information subject to change without notice.*
6SE483 0401 Copyright © 2004 DETROIT DIESEL CORPORATION

Any faults that occur are stored as codes in the ECM's memory. These codes can be accessed in any of three ways:

1. A DDR can be used to read the codes. See Figure 2-98.
2. A personal computer (PC) connected to the ECM through a translator device which converts J1708 to RS232 protocol can be used.
3. The Check Engine Light (CEL) or the Stop Engine Light (SEL) is illuminated.
   - The CEL (panel mounted yellow indicator light) illuminated diagnose condition as soon as convenient.
   - The SEL (panel mounted red indicator light) and CEL illuminated, a major fault occurred and immediate attention required to avoid engine damage.
   - Automatic engine shutdown or rampdown is available as an option. A shutdown override switch is required to allow the vehicle to be moved to a safe location during automatic shutdown or rampdown.

DDEC III/IV features programmable with a Diagnostic Data Reader (DDR) are:

- Password
- Droop
- Active hp braking
- Cruise control
- Engine brake
- Vehicle speed limiting
- Vehicle speed sensor
- Variable Speed Governor cruise switch
- Idle timer shutdown
- Idle timer between air temperatures
- Vehicle ID number (VIN)
- Idle adjustment
- Progressive shifting
- Engine protection

 Copyright © 2004 DETROIT DIESEL CORPORATION

The hand-held DDR is used on engines equipped with DDEC III/IV to display engine description, diagnostic data, fault codes, and to program the ECM calibration. A printout of the information displayed on the DDR, can be obtained by attaching a printer. The diagnostic data reader kit, J 38500-D, includes a reader, cable, carrying case, DDEC cartridge, manual, and a six-pin adaptor. See Figure 2-98.

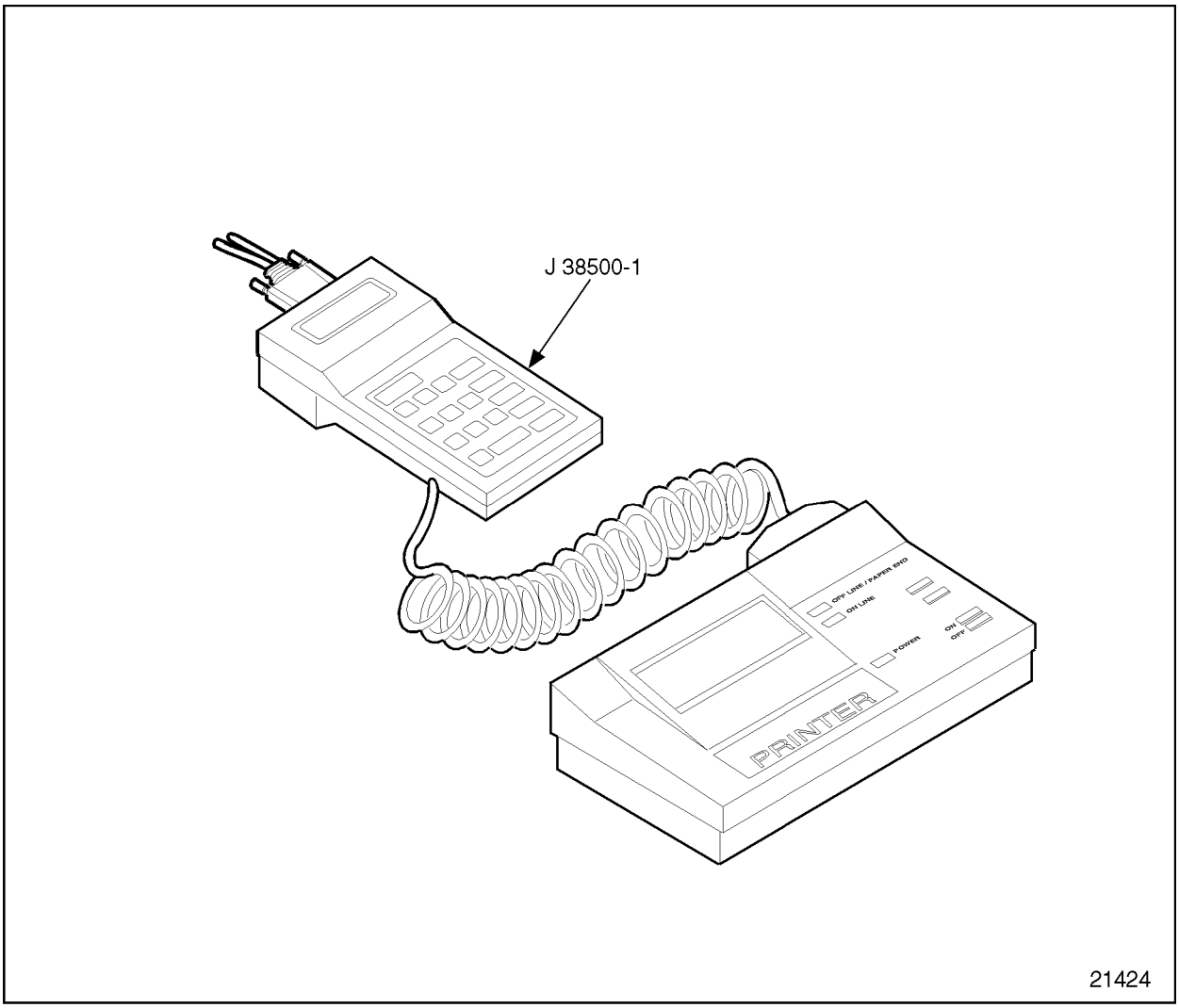

Figure 2-98 The DDR and Printer

The SAE Standard Communications of the DDEC III/IV system are listed in Table 2-11. The fan control inputs and outputs for DDEC III/IV are listed in Table 2-12. The engine brake control features of DDEC III/IV are listed in Table 2-13. DDEC III/IV can identify faulty components and other engine-related problems by providing the technician with a diagnostic code. A comparison of DDEC II and DDEC III/IV engine hardware is listed in Table 2-14. A comparison of DDEC II and DDEC III/IV standard sensors is listed in Table 2-15 and a comparison of optional sensors is listed in Table 2-16.

(Rev. 2004) *All information subject to change without notice.*
6SE483 0401 Copyright © 2004 DETROIT DIESEL CORPORATION

SAE Standard Communication
SAE J1587 protocol on J1708 hardware
Diagnostics
Electronic dashes
Data Hub
SAE J1922 protocol on J1708 hardware
Traction control systems
Transmission controls
SAE J1939 high speed data link
Vehicle controls

Table 2-11 SAE Standard Communications for DDEC III/IV

Inputs	Outputs
Coolant temperature	Single on/off fan clutch
Oil temperature	Dual on/off fan clutch
Air temperatures	Two-speed single fan
Air conditioning	Modulated fan clutch

Table 2-12 Fan Controls for DDEC III/IV

Engine Brake Control
Eliminates OEM engine brake module
Compatible with cruise control
Engine brake will go on and off without disabling cruise control
Engine fan braking
Requires fan and engine brake control
Fan turns on when engine brake is on high
In cruise control, engine brake operates electronically
MPH activating speeds are set with DDR
Cruise control, engine brake operates manually

Table 2-13 Engine Brake Control with DDEC III/IV

 Copyright © 2004 DETROIT DIESEL CORPORATION

Engine Hardware	DDEC II	DDEC III/IV
Electronic Foot Pedal Assembly	Three Wires	Three or five wires
Coolant Level Sensor	Coolant Probe/Module	Coolant Probe Only
Diagnostic Request Stop Engine Override	Two Separate Switches	One Combined Switch
Communications	Vehicle Interface Harness SAE J1587/J1922	Vehicle Interface Harness SAE J1587 Communications Harness SAE J1922, SAE J1939
Power Harness	6-Pin Connector	5-Pin Square Connector
Wiring	16 gauge wire, 4 Power, 2 Ground	12 gauge wire (Eliminates Splicing), 2 Power, 2 Ground

Table 2-14 DDEC II vs DDEC III/IV

DDEC II	DDEC III/IV
Oil Temperature (Truck)	Oil Temperature
Oil Pressure	Oil Pressure
Coolant Level	Coolant Level
Turbo Boost	Turbo Boost
Throttle Position (OEM Supplied)	Throttle Position
Timing Reference	Timing Reference
Synchronous Reference	Synchronous Reference
Fuel Temperature	Fuel Temperature, Air Temperature

Table 2-15 Standard Sensors

DDEC II	DDEC III/IV
Fuel Pressure	Fuel Pressure
Pressure Governor (Firetruck)	Pressure Governor (Firetruck)

Table 2-16 Optional Sensors

(Rev. 2004) *All information subject to change without notice.*
6SE483 0401 Copyright © 2004 DETROIT DIESEL CORPORATION

2.19.1 Repair or Replacement of the DDEC III/IV Electronic Control Module

The DDEC III/IV ECM is a sealed, nonserviceable unit. Tag defective ECM for recore.

2.19.2 Removal of the DDEC III/IV Electronic Control Module

Perform the following steps for ECM removal:

1. Carefully disengage the lock tab on the power harness and injector harness connectors when removing.
2. Remove the two (2) wire and three (3) wire harness connections at the ECM.
3. Remove the two 30-pin connectors.
4. Remove the through-bolts holding the ECM to the engine.
5. Remove the ECM and cold plate from the engine, if so equipped.
6. Remove the screws securing the cold plate to the ECM. Remove the cold plate from the ECM, if so equipped.

2.19.3 Installation of the DDEC III/IV Electronic Control Module

Perform the following steps for ECM installation:

1. Install the cold plate on the ECM, if so equipped. Tighten the screws securing the cold plate to the ECM. Use Loctite® 262, or equivalent, on the cold plate-to-ECM screws. Torque to 9.5-12 N·m (84-106 lb·in.).
2. Inspect the ECM isolators for damage and replace if required.
3. Mount the ECM and cold plate to the engine.
4. Secure the ECM to the engine with through-bolts. Torque the ECM-to-engine bolts to 23-27 N·m (17-20 lb·ft).
5. Install the connectors in the ECM and torque the jack screws to 2.49–3.16 N·m (22–28 lb·in).
6. Engage the lock tab on the power harness and injector harness connectors.
7. Turn the ignition to the "ON" position. Observe the DDR for any diagnostic code(s). If any code(s) other than code 25 is logged, refer to the *Detroit Diesel DDEC III/IV Single ECM Troubleshooting Manual* (6SE497).

 Copyright © 2004 DETROIT DIESEL CORPORATION

CAUTION:

Diesel engine exhaust and some of its constituents are known to the State of California to cause cancer, birth defects, and other reproductive harm.

- ☐ **Always start and operate an engine in a well ventilated area.**
- ☐ **If operating an engine in an enclosed area, vent the exhaust to the outside.**
- ☐ **Do not modify or tamper with the exhaust system or emission control system.**

8. Start the engine, and check for leaks.

(Rev. 2004) *All information subject to change without notice.*
6SE483 0401 Copyright © 2004 DETROIT DIESEL CORPORATION

2.20 DDEC II ELECTRONIC CONTROL MODULE

This system utilizes an engine-mounted ECM only with the EDU components of the DDEC I system contained in the ECM. The replaceable PROM is an EPROM in the DDEC II ECM. The ECM has isolator mounts for both vibration and electrical isolation. Depending upon application, some units have fuel cooling of the ECM. The engine-mounted system simplifies vehicle wiring for greater reliability.

The DDEC II ECM is a microprocessor. It is the control center of the DDEC II system. See Figure 2-99.

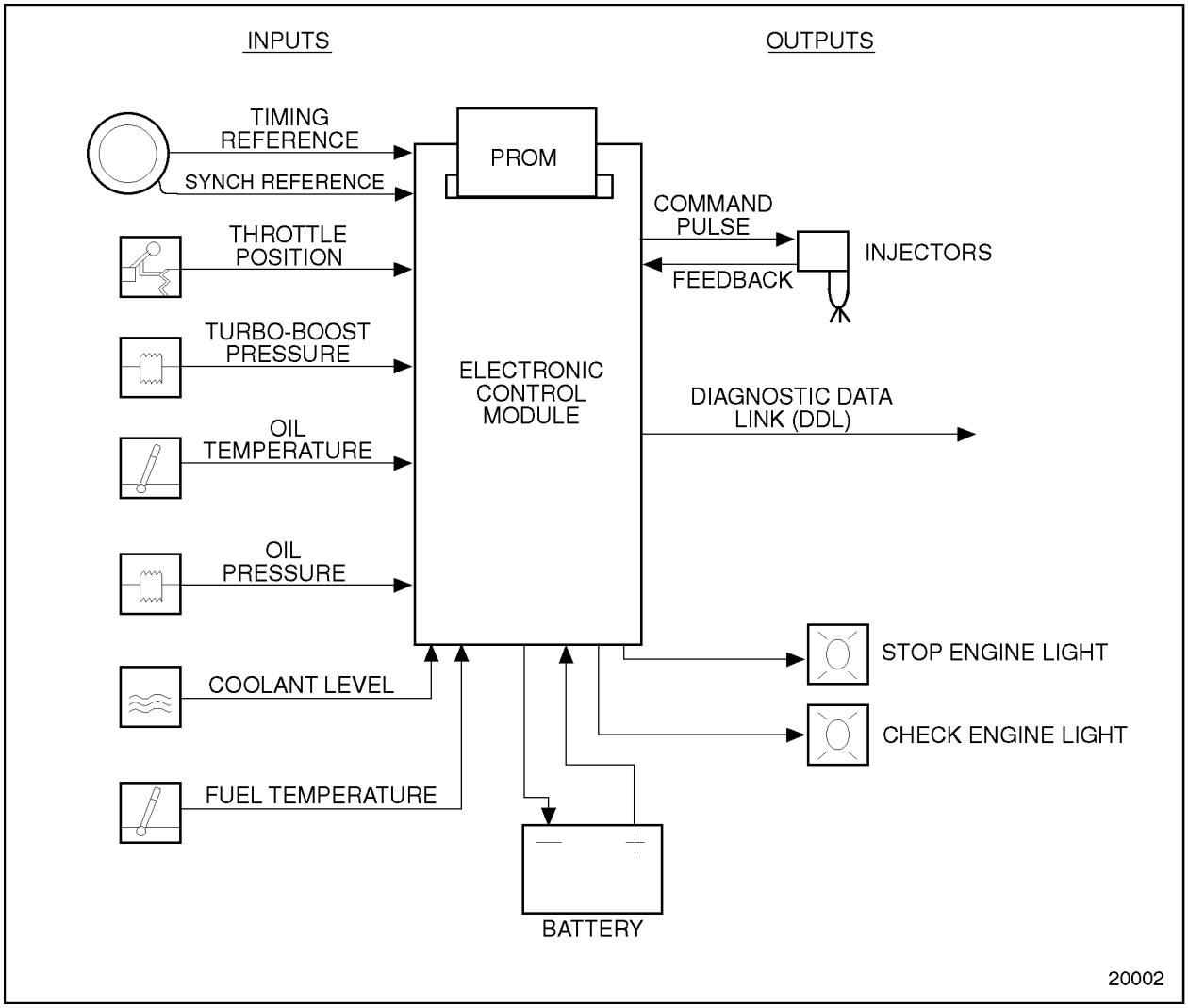

Figure 2-99 Schematic Diagram of DDEC II

 Copyright © 2004 DETROIT DIESEL CORPORATION

The DDEC II ECM is packaged in a die-cast aluminum housing with sealed connectors. See Figure 2-91. It is mounted on the left side of the engine block.

The DDEC II consists of the following:

- The DDEC II ECM
- A replaceable EPROM
- Connections to various engine sensors, operational displays, power and fuel injectors

2.20.1 Replacement of the DDEC II Electronic Control Module

The DDEC II ECM is a sealed, nonserviceable unit. Tag defective ECM for recore.

2.20.2 Diagnostic Procedures

Basic mechanical checks should be made beforehand to verify that the problem is definitely related to the electrical portion of the system. If the basic mechanical checks fail to locate the problem, refer the *Detroit Diesel Single ECM Troubleshooting Manual,* (6SE497). Start by reading the "Basic Knowledge Required" section before attempting to diagnosis electrical faults.

(Rev. 2004) *All information subject to change without notice.*
6SE483 0401 Copyright © 2004 DETROIT DIESEL CORPORATION

There are two diagnostic Data Readers (DDR) that can be used for diagnosis of DDEC I and DDEC II engines. See Figure 2-100 and see Figure 2-101.

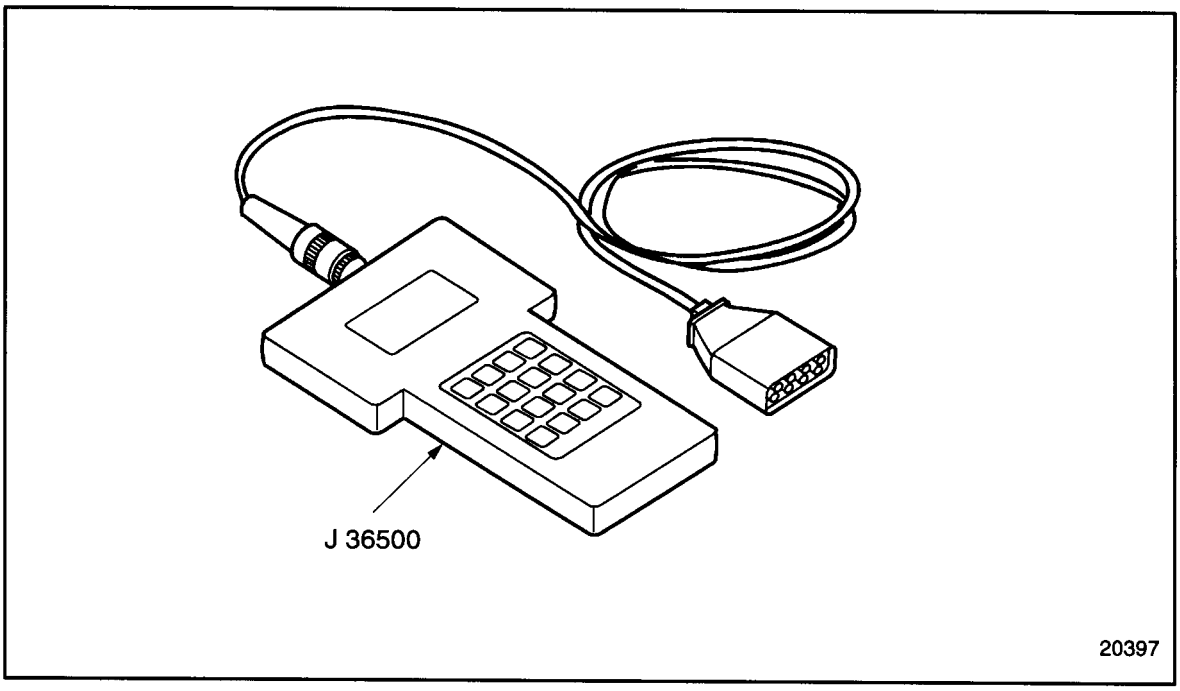

Figure 2-100 DDEC I & II Reader

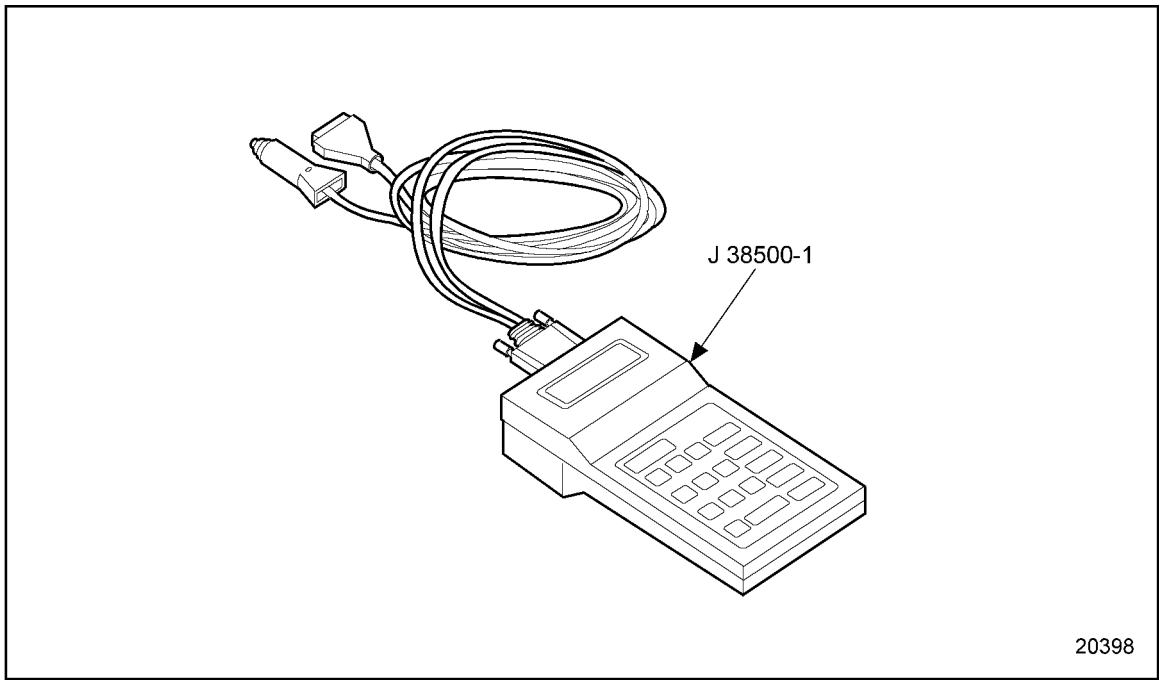

Figure 2-101 DDEC II & III/IV Reader

 Copyright © 2004 DETROIT DIESEL CORPORATION

2.20.3 Removal of DDEC II Electronic Control Module

Perform the following steps for ECM removal:

1. Carefully disengage the lock tab on the power harness and injector harness connectors.
2. Remove the five (5) wire harness connections at the ECM.
3. Remove the through-bolts holding the ECM to the engine.
4. Remove the ECM and cold plate from the engine, if so equipped.
5. Remove the screws securing the cold plate to the ECM. Remove the cold plate from the ECM, if so equipped.

2.20.4 Installation of DDEC II Electronic Control Module

Perform the following steps for ECM installation:

1. Install the cold plate on the ECM, if so equipped. Tighten the screws securing the cold plate to the ECM. Use Loctite® 262, or equivalent, on the cold plate-to-ECM screws. Torque to 9.5-12 N·m (84-106 lb·in.).
2. Inspect the ECM isolators for damage and replace if required.
3. Mount the ECM and cold plate to the engine.
4. Secure the ECM to the engine with through-bolts. Torque the ECM-to-engine bolts to 23-27 N·m (17-20 lb·ft). Torque the ECM connector hold-down screws to 2.4-3.0 N·m (21-26 lb·in.).
5. Connect the five (5) wire harness connections at the ECM.
6. Engage the lock tab on the power harness and injector harness connectors.
7. Turn the ignition to the "ON" position. Observe the DDR for any diagnostic code(s). If any code(s) other than code 25 is logged, refer to the *Detroit Diesel Single ECM Troubleshooting Manual* (6SE497).

(Rev. 2004) *All information subject to change without notice.*
6SE483 0401 Copyright © 2004 DETROIT DIESEL CORPORATION

CAUTION:

Diesel engine exhaust and some of its constituents are known to the State of California to cause cancer, birth defects, and other reproductive harm.

- ☐ **Always start and operate an engine in a well ventilated area.**
- ☐ **If operating an engine in an enclosed area, vent the exhaust to the outside.**
- ☐ **Do not modify or tamper with the exhaust system or emission control system.**

8. Start the engine, and check for fuel leaks.

 Copyright © 2004 DETROIT DIESEL CORPORATION

Using "Check Engine" light, read the DDEC II Diagnostic codes. If the diagnostic reader is not available, the following procedure can be used to read the fault codes using the "Check Engine" light on the dashboard of the vehicle. See Figure 2-102.

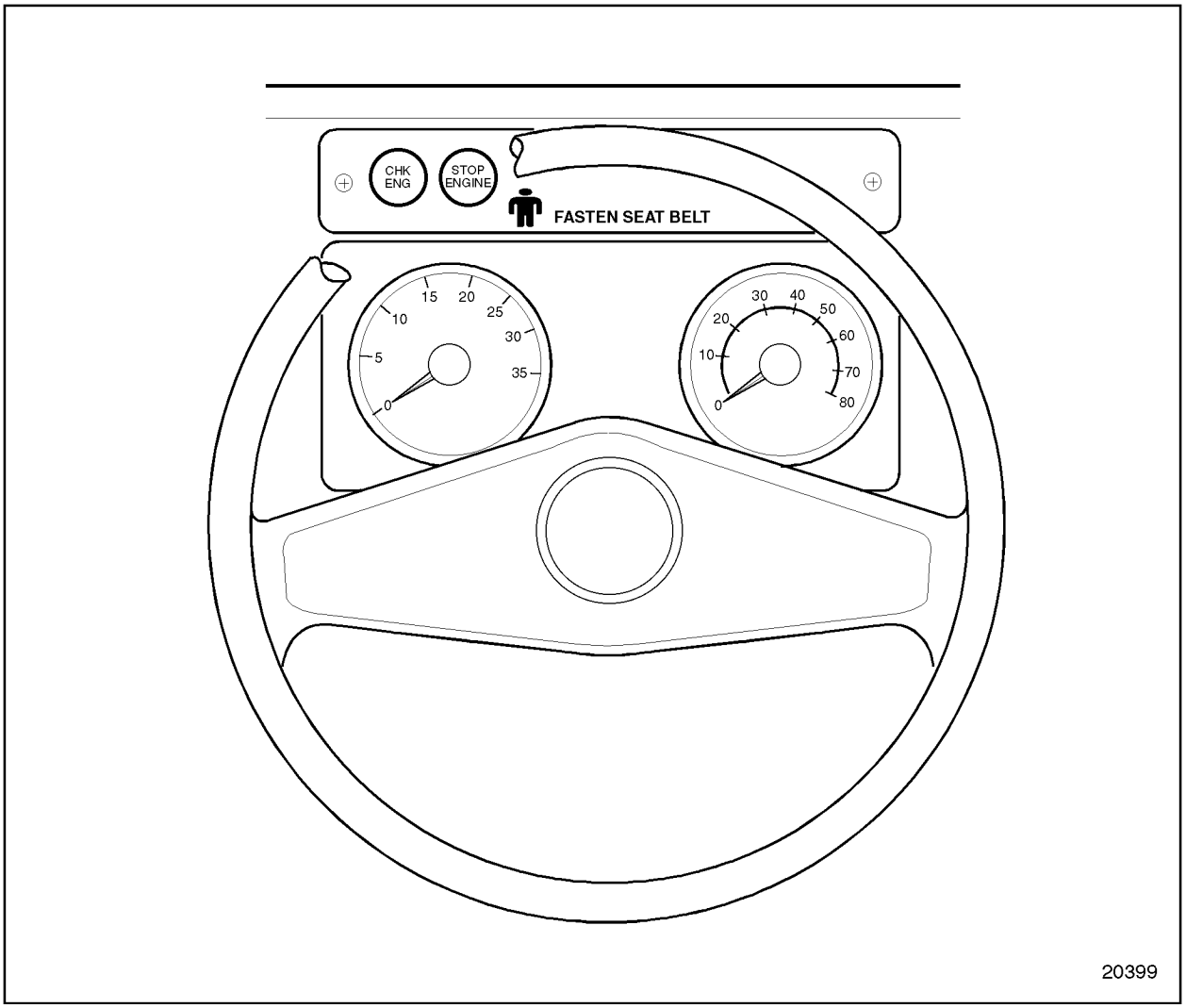

Figure 2-102 Dashboard Warning Lights

If the vehicle is equipped with an OEM supplied diagnostic switch, hold the switch in the "ON" position. This should be done with the ignition on and the engine not running.

(Rev. 2004) *All information subject to change without notice.*
6SE483 0401 Copyright © 2004 DETROIT DIESEL CORPORATION

If there is no diagnostic switch, locate the 12-pin Diagnostic Data Link (DDL) connector (for DDEC I and II applications only) under the dash of the vehicle. See Figure 2-103.

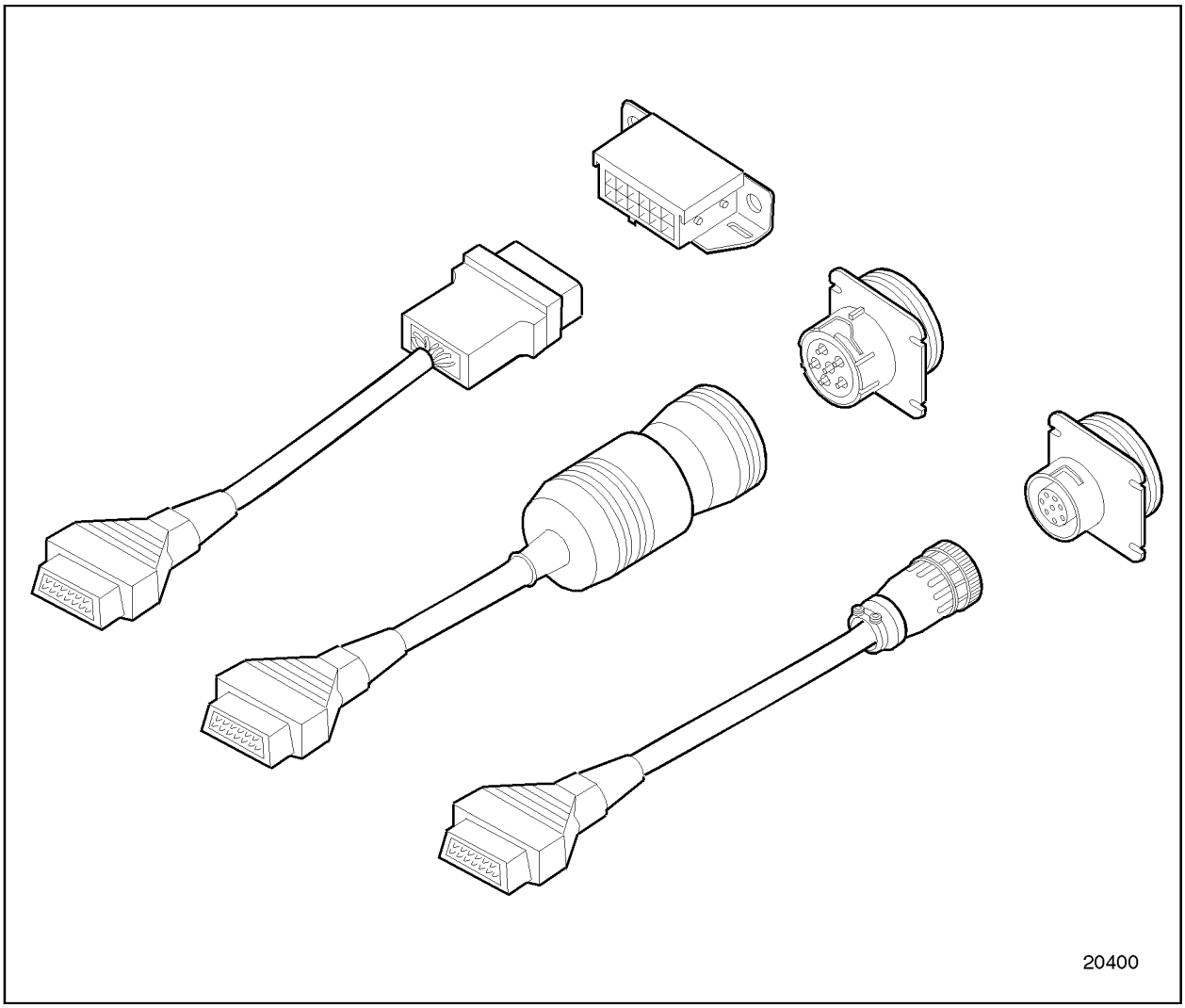

Figure 2-103 Examples of Diagnostic Data Link (DDL) Connector

 Copyright © 2004 DETROIT DIESEL CORPORATION

NOTICE:
If the vehicle is equipped with an OEM supplied diagnostic switch, the switch must NOT be switched on when operating the vehicle. If this is done, the diagnostic mode line will be grounded, and the throttle will be forced to the idle position, affecting vehicle operation. This condition will not occur when a diagnostic reader is used.

These methods will cause the Check Engine light to begin flashing a code when the ignition is turned to the ON position. Code 25, for example, would be two flashes followed by a pause, followed by five more flashes. This code would indicate no trouble codes logged since the last system check. This flashing code will be repeated until the diagnostic switch is turned OFF or the jumper wire is removed from pins A and M (on DDEC II engines only). If any code(s) other than code 25 is logged, refer to the *Detroit Diesel Single ECM Troubleshooting Manual* (6SE497).

Fault codes can be cleared from the DDEC II and III/IV systems only by using a diagnostic reader. Follow the instructions supplied with the reader to clear the fault codes.

NOTE:
Before beginning any repair procedures, the ignition switch must be in the OFF position.

2.20.5 Replacement of the DDEC II EPROM

The following tools are required to replace the former EPROM with the improved EPROM stabilizer kit:

- ☐ 1/4 in. Nut Driver
- ☐ Thin-head standard screwdriver
- ☐ Kent-Moore antistatic wrist strap BT-8639-B (for electrostatic discharge)

(Rev. 2004) *All information subject to change without notice.*
6SE483 0401 Copyright © 2004 DETROIT DIESEL CORPORATION

To replace a DDEC II EPROM, see Figure 2-104.

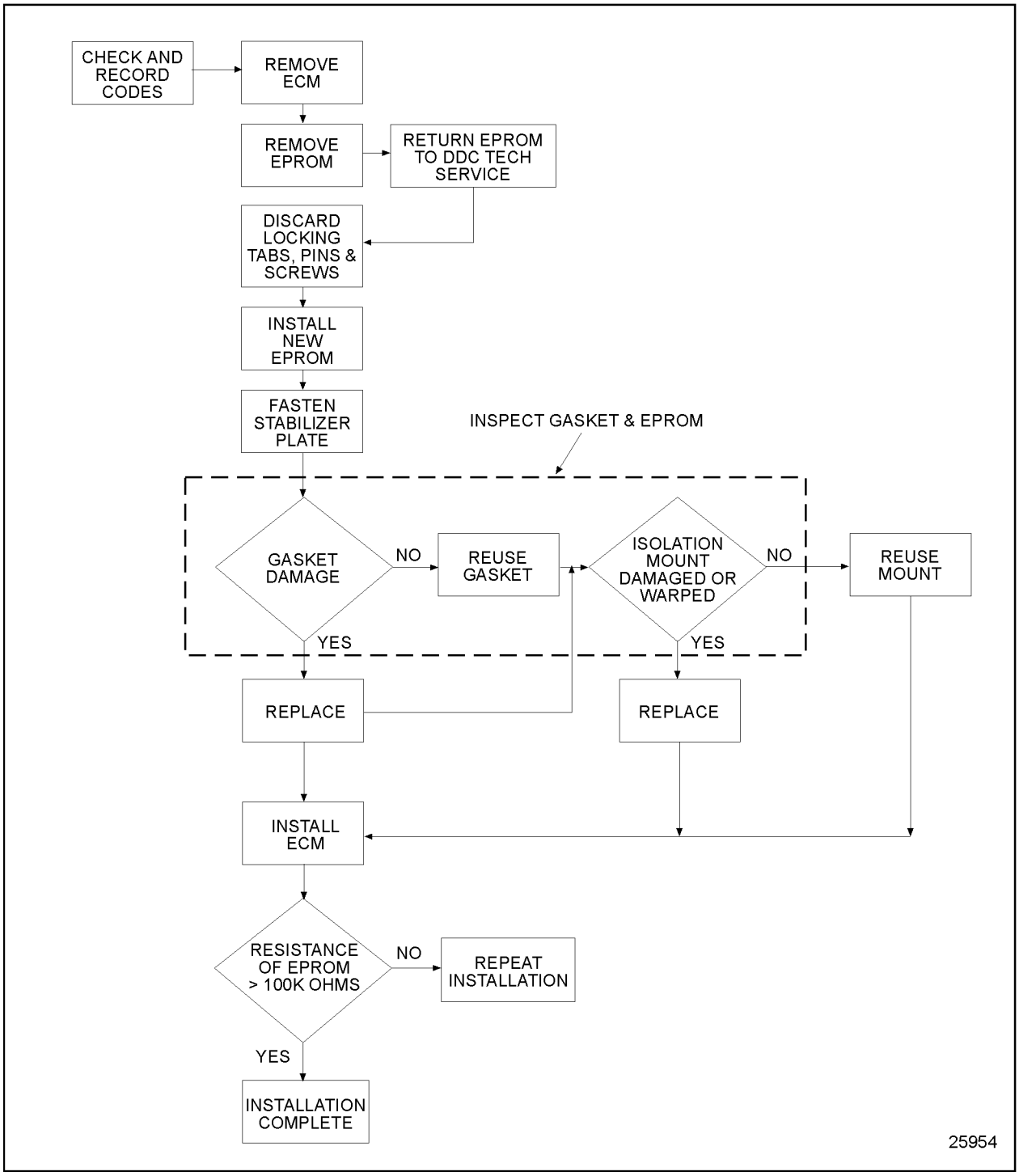

Figure 2-104 Replacement Flowchart for DDEC II EPROM

 Copyright © 2004 DETROIT DIESEL CORPORATION

2.20.6 Removal of the DDEC II EPROM

Perform the following steps to remove the former EPROM:

1. Using a Diagnostic Data Reader (DDR),J 38500-B, check for codes in the electronic control module (ECM). Note the codes. Erase the codes.
2. Remove the ECM from the engine and take to a clean environment.

NOTICE:
Failure to properly ground your hand while handling the ECM may result in damage to the EPROM, the ECM or both.

3. Fasten the wrist strap of tool BT-8639-B securely around your wrist and attach the test clip to a good ground.
4. Using the 1/4 in. nut driver, remove the 16 screws which fasten the ECM cover to the case.

NOTICE:
Use care to avoid damaging the cover gasket on the ECM. A damaged cover gasket could allow contaminants to enter the ECM, which may cause damage.

5. Using the thin head standard screwdriver, *carefully* pry the cover loose from the case.
6. Early EPROM assemblies may have been installed in a blue 28-pin socket at the end of the ECM and under the stabilizer plate. To remove the EPROM assembly from its socket, push down (unlatch) the blue and white locking tabs and move them to the side. Remove the EPROM. Then, using a suitable narrow diameter tool, remove the locking tabs by carefully pressing out the pins holding the tabs to the socket. Discard the tabs and pins.

(Rev. 2004) *All information subject to change without notice.*
6SE483 0401 Copyright © 2004 DETROIT DIESEL CORPORATION

2.20.7 Installation of the DDEC II EPROM

Install the improved EPROM stabilizer kit as follows:

1. Using the 1/4 in. nut driver, remove the three mounting screws adjacent to the blue 28-pin socket. Discard the screws.
2. The EPROM assembly and socket are keyed, so the assembly can be installed only one way. Observe the keying and install the EPROM assembly by pushing it firmly down into the socket.
3. See Figure 2-105 and place the shorter spacer with two bands over the hole at location 1. Place the longer spacers over the holes at locations 2 and 3. Lay the stabilizer plate over the EPROM so that the bolt holes line up with the spacers and the holes in the circuit board. Fasten the stabilizer plate to the case with three #8-32 x 1 3/4 in. screws. Torque screws to 3.0-3.7 N·m (26.6-32.7 lb·in.).

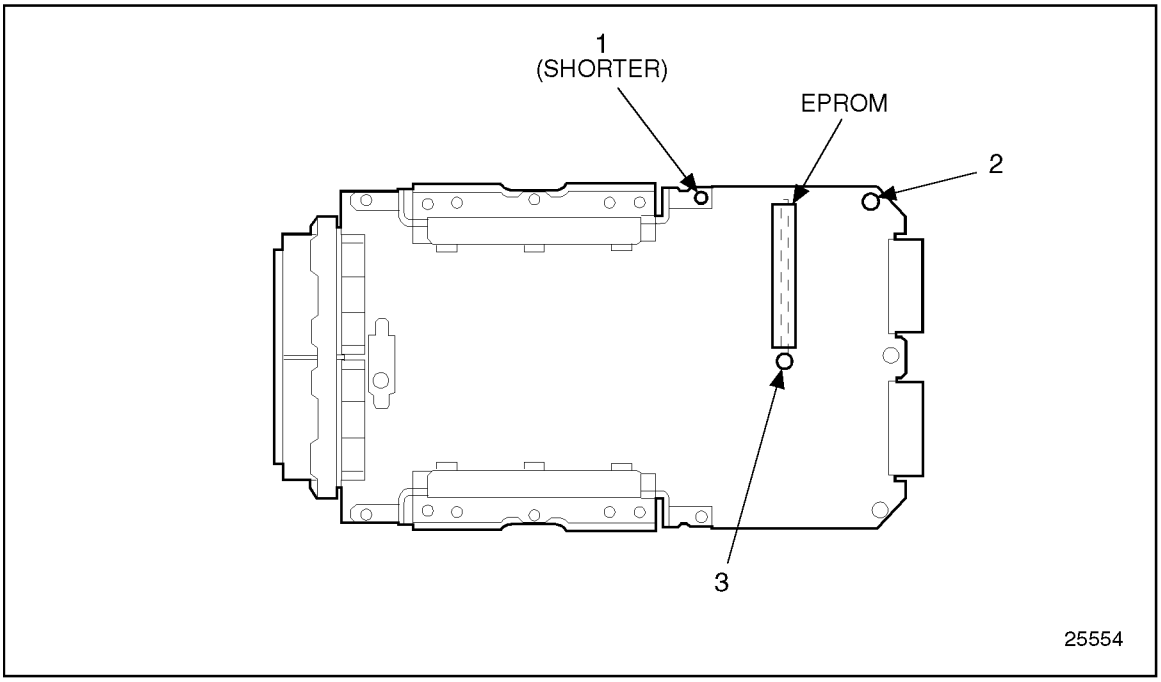

Figure 2-105 EPROM and Spacer Locations

 Copyright © 2004 DETROIT DIESEL CORPORATION

NOTICE:
Use care to avoid damaging the cover gasket on the ECM. A damaged cover gasket could allow contaminants to enter the ECM, which may cause damage.

4. Carefully inspect the cover gasket for any damage or areas where a dust leak could possibly occur.

NOTE:
If the gasket is damaged, it *must* be replaced with a new gasket.

5. Fasten the cover to the case with the 16 previously removed #8 - 32 x 1/2 in. screws. Torque screws to 2.0-2.2 N·m (17.7-19.5 lb·in.).
6. Remove the wrist strap and ground clip of tool BT-8639-B and store for next use.
7. Test the EPROM for proper installation. Refer to section 2.20.7.
8. Install the ECM on the engine. Refer to section 2.20.4.

2.20.7.1 Testing of the ECM

The resistance of the ECM to block must be checked after installation. Use the following procedure:

1. With the six-pin connector unplugged, connect the leads of an ohmmeter between the ECM case and the engine.
2. Return the removed EPROM assembly to an authorized Detroit Diesel distributor.

(Rev. 2004) *All information subject to change without notice.*
6SE483 0401 Copyright © 2004 DETROIT DIESEL CORPORATION

2.21 DDEC I

This system utilizes an engine mounted EDU and a cab mounted ECM, which has a replaceable Programmable Read-Only Memory (PROM). The EDU functions as the high current switching unit for the actuation of the injector solenoids and is fuel-cooled.

The DDEC I ECM is a microprocessor. It is the control center of the DDEC I system. See Figure 2-106.

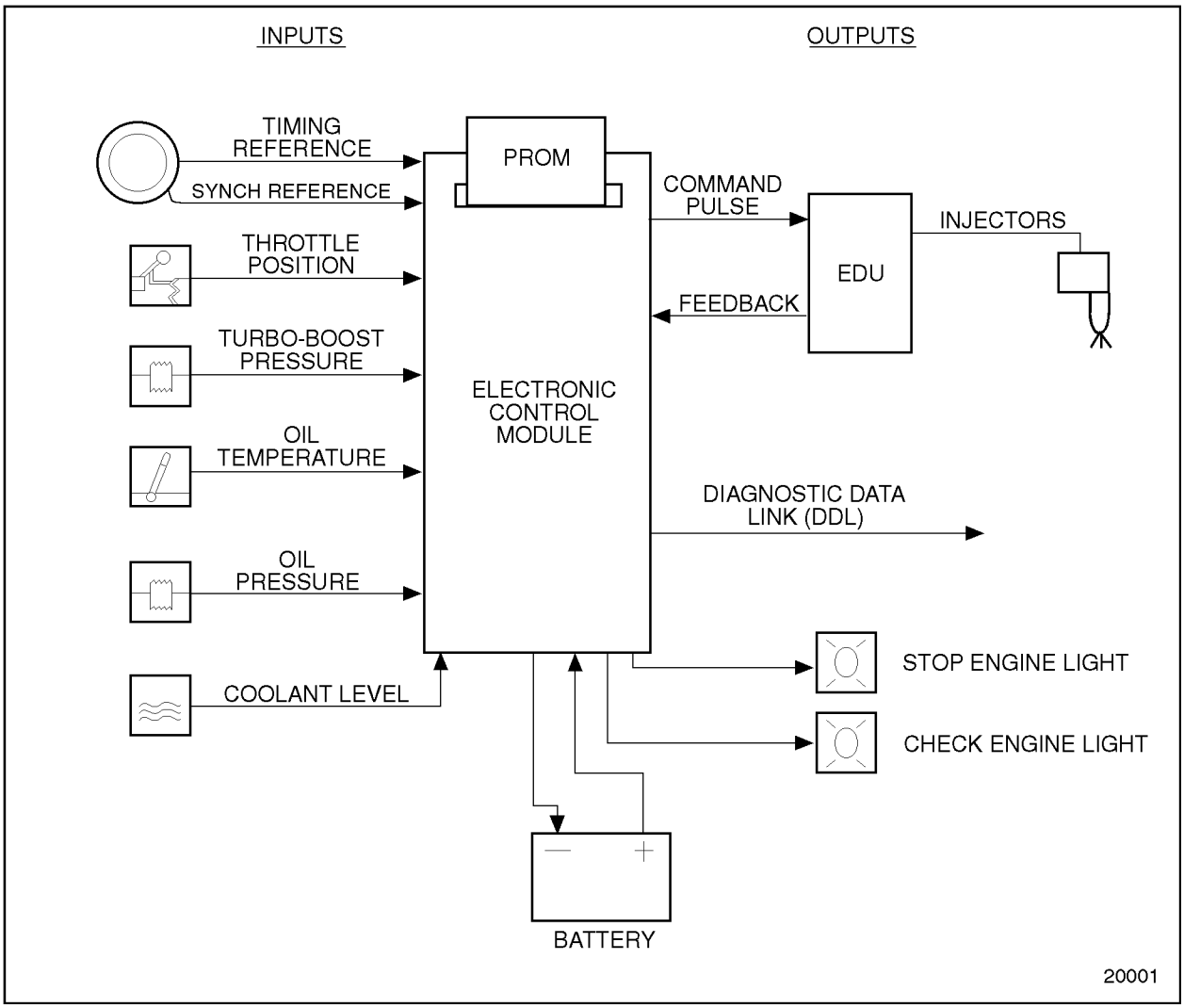

Figure 2-106 Schematic Diagram of DDEC I

 Copyright © 2004 DETROIT DIESEL CORPORATION

The DDEC I ECM is packaged in a die-cast aluminum housing with sealed connectors. See Figure 2-107.

The DDEC I system consists of the following:

- The DDEC I ECM
- A replaceable PROM
- Connections to various engine sensors, operational displays, power and fuel injectors

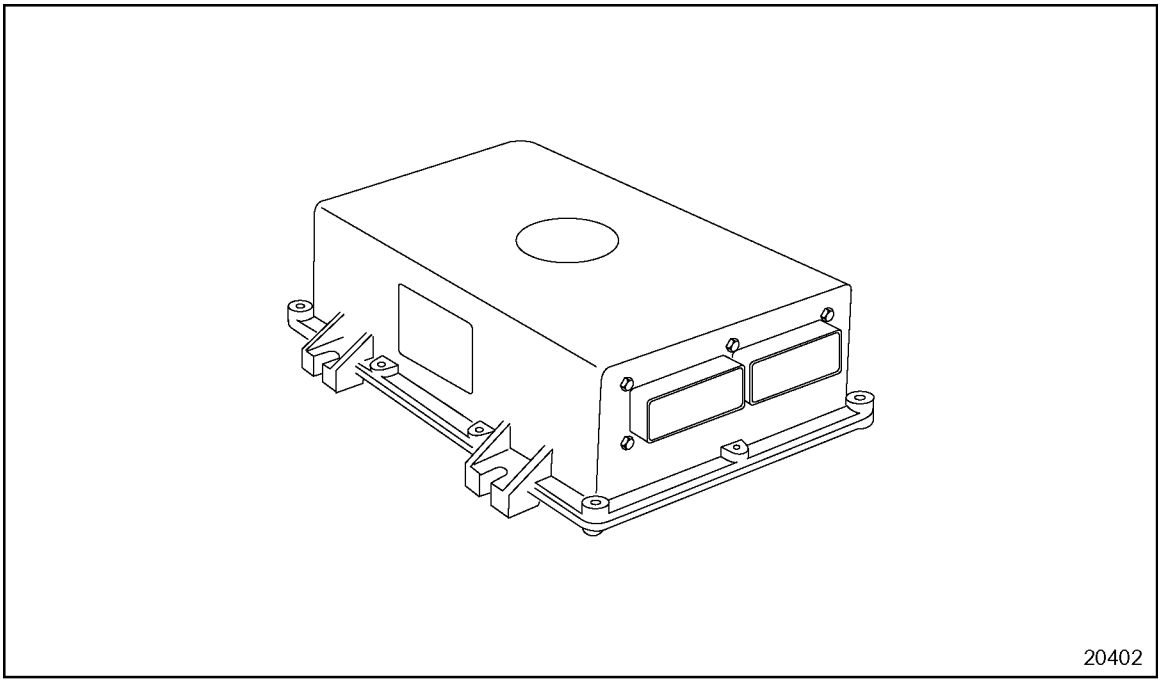

Figure 2-107 Electronic Control Module - DDEC I

It is usually mounted inside the passenger compartment of the vehicle.

(Rev. 2004) *All information subject to change without notice.*
6SE483 0401 Copyright © 2004 DETROIT DIESEL CORPORATION

2.21.1 Replacement of the DDEC I Electronic Control Module

DDEC I ECM is a sealed nonserviceable unit.

Basic mechanical checks should be made beforehand to verify that the problem is definitely related to the electrical portion of the system. If the basic mechanical checks fail to locate the problem, refer to the *Detroit Diesel Single ECM Troubleshooting Manual* (6SE497). Start by reading the "Basic Knowledge Required" section before attempting to diagnosis electrical faults.

The DDL Reader can only be used on DDEC I engines. See Figure 2-108.

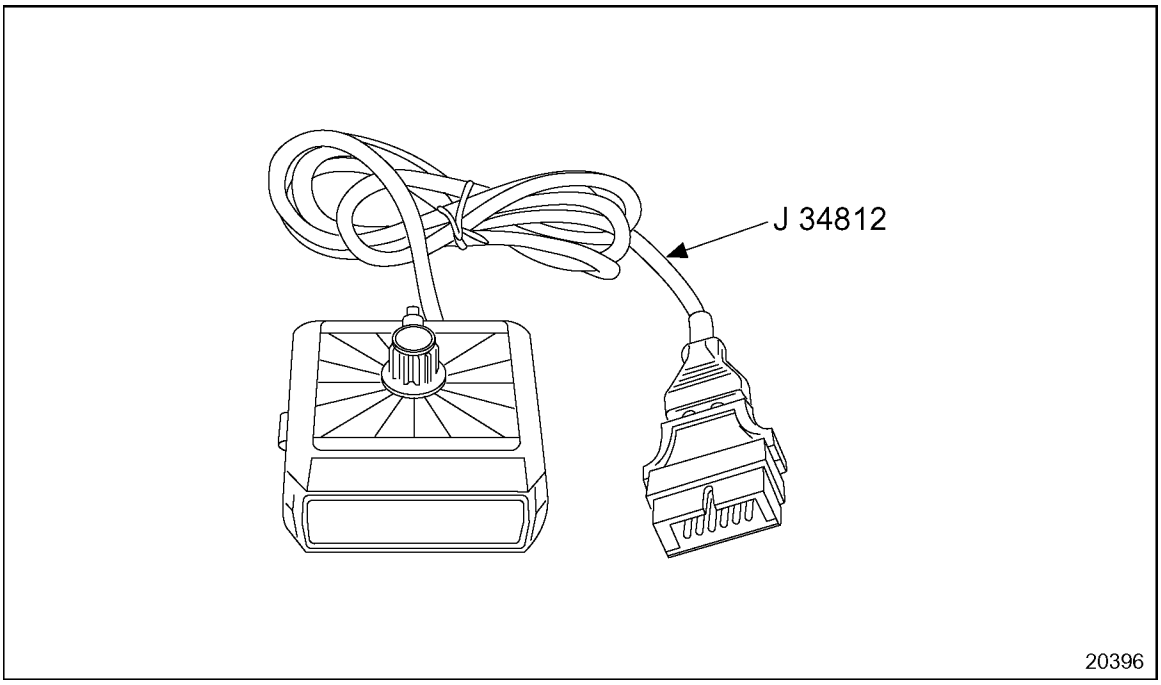

Figure 2-108 DDEC Reader

 Copyright © 2004 DETROIT DIESEL CORPORATION

If the diagnostic reader is not available, the following procedure can be used to read the fault codes using the Check Engine light on the dashboard of the vehicle.

If the vehicle is equipped with an OEM supplied diagnostic switch, hold the switch in the on position. This should be done with the ignition on and the engine not running. See Figure 2-102.

CAUTION:

To avoid injury from electrical shock, follow OEM furnished operating instructions prior to usage.

NOTICE:

If the vehicle is equipped with an OEM supplied diagnostic switch, the switch must NOT be switched on when operating the vehicle. If this is done, the diagnostic mode line will be grounded, and the throttle will be forced to the idle position, affecting vehicle operation. The throttle will also go to idle if pins A and M in the DDL connector are jumpered together. This condition will not occur when a diagnostic reader is used.

These methods will cause the Check Engine light to begin flashing a code when the ignition is turned to the ON position. Code 25, for example, would be two flashes followed by a pause, followed by five more flashes. This code would indicate no trouble codes logged since the last system check. This flashing code will be repeated until the diagnostic switch is turned OFF or the jumper wire is removed from pins A and M.

If any code(s) other than code 25 is logged, refer to the *Detroit Diesel Single ECM Troubleshooting Manual* (6SE497).

(Rev. 2004) *All information subject to change without notice.*
6SE483 0401 Copyright © 2004 DETROIT DIESEL CORPORATION

Fault codes can be cleared from the DDEC I system by interrupting the power flow to the ECM. This can be accomplished by turning the ignition to the OFF position and removing the 5-amp ECM fuse for ten seconds or more. See Figure 2-109.

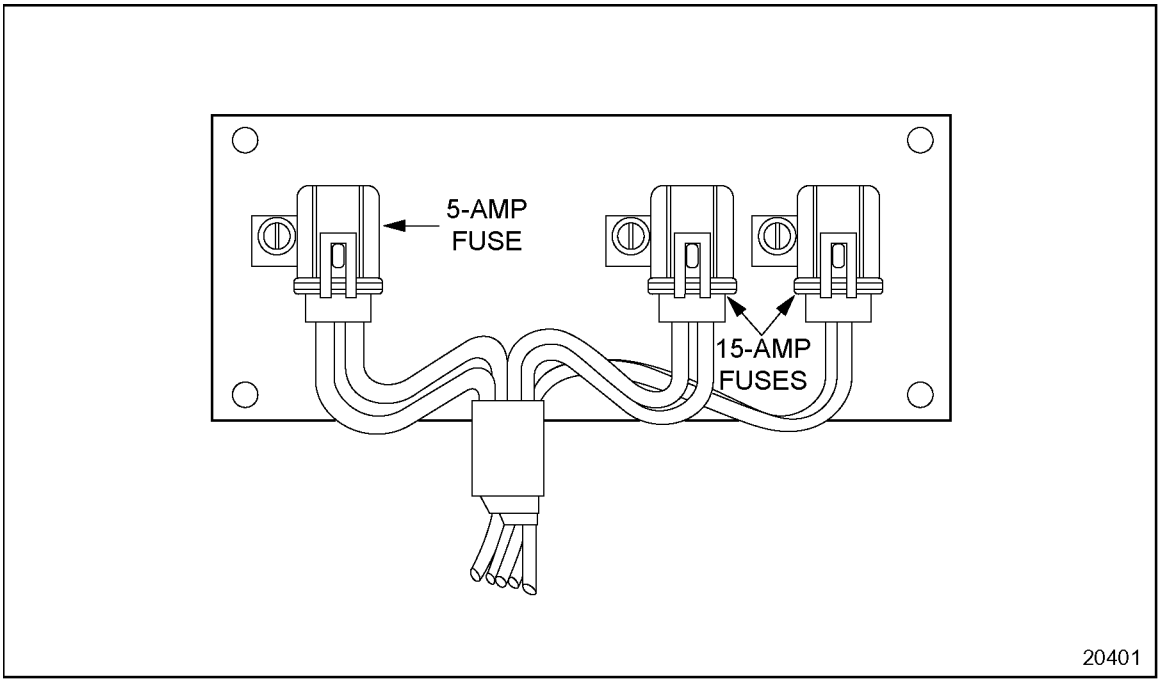

Figure 2-109 Typical Electronic Control Module Power Fuse Panel

NOTE:
Some OEMs will use circuit breakers. Follow the OEM schematic. Some OEMs will use a different fuse plate configuration than the one shown. See Figure 2-109.

NOTE:
Before beginning any repair procedures, the ignition switch must be in the OFF position.

The following section(s) are basic replacement procedures for the DDEC components. Components should NOT be replaced unless a defective unit has been concluded by the *Detroit Diesel Single ECM Troubleshooting Manual* (6SE497).

 Copyright © 2004 DETROIT DIESEL CORPORATION

2.21.2 Removal of DDEC I Electronic Control Module

Perform the following steps for ECM removal:

1. Loosen, but do not remove, the two hold-down screws attaching the wire harness connectors to the ECM.
2. Pull gently on the connectors and remove them from the ECM sockets.
3. Remove the three bolts securing the ECM to the vehicle.
4. Remove the ECM from the vehicle.
5. If the programmable read-only memory (PROM) is to be reused, remove it from the ECM using the PROM removal instructions; refer to section 2.22.2.

2.21.3 Installation of DDEC I Electronic Control Module

Perform the following steps for ECM installation:

1. Secure the ECM to the vehicle using three bolts. Torque the ECM connector hold-down screws to 2.4-3.0 N·m (21-26 lb·in.). The three bolts that secure the ECM to the vehicle should be torqued to 16 N·m (12 lb·ft).
2. Install connectors in ECM sockets.
3. Tighten the two hold-down screws attaching the wire harness connectors to the ECM.
4. Turn the ignition to the ON position. Observe the DDR for any diagnostic code(s). If any code(s) other than code 25 is logged, refer to the *Detroit Diesel Single ECM Troubleshooting Manual* (6SE497).

(Rev. 2004) *All information subject to change without notice.*
6SE483 0401 Copyright © 2004 DETROIT DIESEL CORPORATION

2.22 PROGRAMMABLE READ-ONLY MEMORY (PROM) DDEC I

The PROM is an electronic component located in a compartment in the back of the ECM. See Figure 2-110.

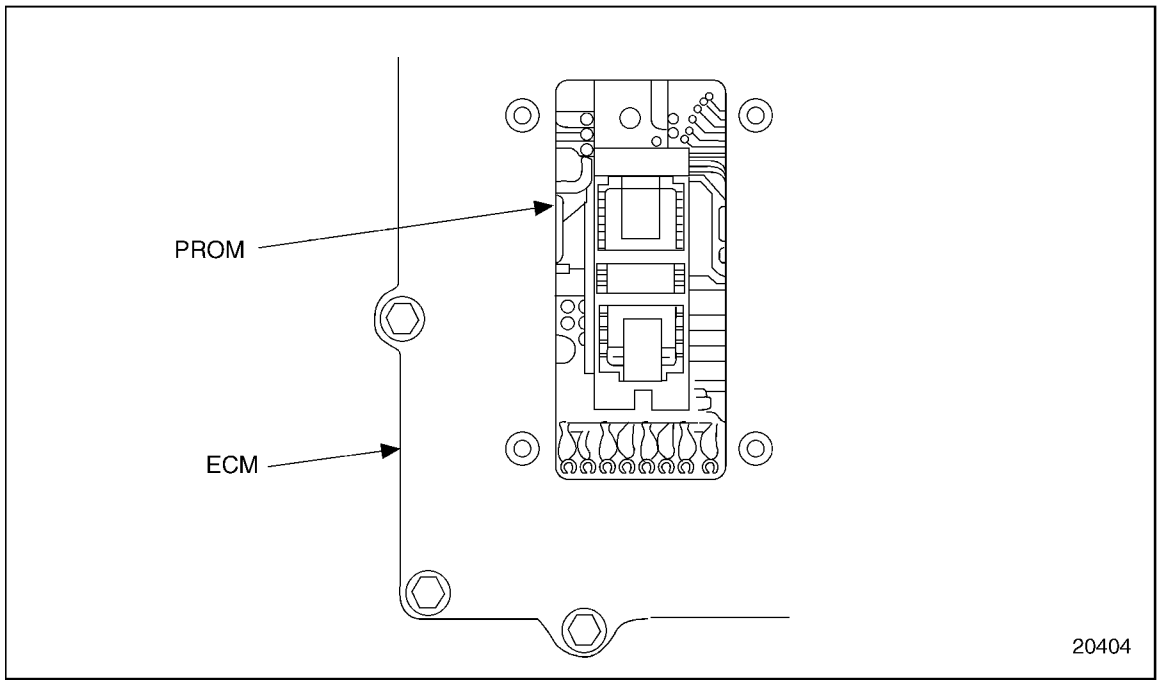

Figure 2-110 Programmable Read-Only Memory

When plugged in, it becomes part of the circuits of the ECM. The PROM is used to establish engine operating specifications. Each PROM has an individual part number.

 Copyright © 2004 DETROIT DIESEL CORPORATION

2.22.1 Replacement of the DDEC I PROM

The PROM is not repairable, it must be replaced.

2.22.2 Removal of PROM

Perform the following steps for PROM removal:

1. Remove the ECM. Refer to section 2.21.2.
2. Remove the four PROM access cover screws.
3. Using the rocker type PROM removal tool, J 35889-A, engage one end of the PROM carrier with the hook end of the tool. See Figure 2-111.

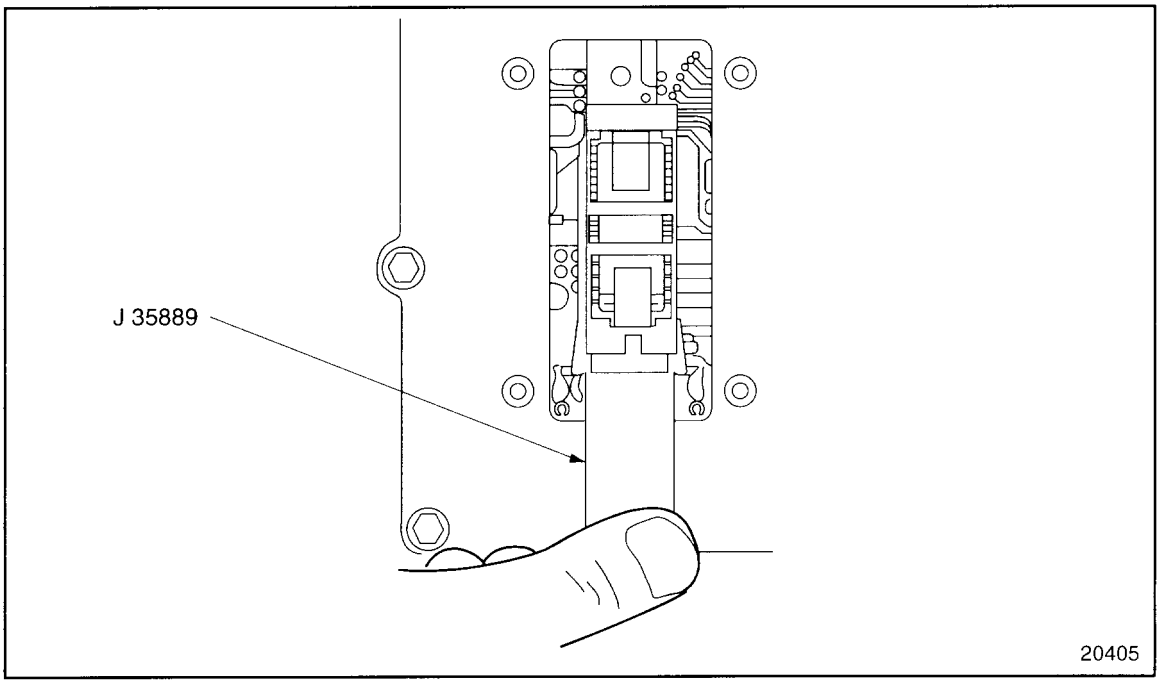

Figure 2-111 Removing PROM

4. Press on the vertical bar end of the tool and rock the engaged end of the PROM carrier up as far as possible.
5. Engage the opposite end of the PROM carrier in the same manner and rock this end up as far as possible. Repeat this process until the PROM carrier and PROM are free of the socket. When done correctly, the PROM and carrier should easily lift free of the socket.

(Rev. 2004) *All information subject to change without notice.*
6SE483 0401 Copyright © 2004 DETROIT DIESEL CORPORATION

2.22.3 Installation of PROM

Perform the following steps for PROM installation:

NOTICE:
Any time a PROM is installed backwards, it will be destroyed upon applying power to the ECM.

1. Take the new PROM (already mounted in a carrier) out if its packaging, and check the part number, making sure it represents the PROM chosen to replace the one removed.
2. Position the new PROM and carrier squarely over the PROM socket with the small notched end of the carrier aligned with the narrow tab on the socket. The numeral one in a circle at the lower right corner of the PROM carrier should be installed in the same position as the numeral one located on the socket. See Figure 2-112.

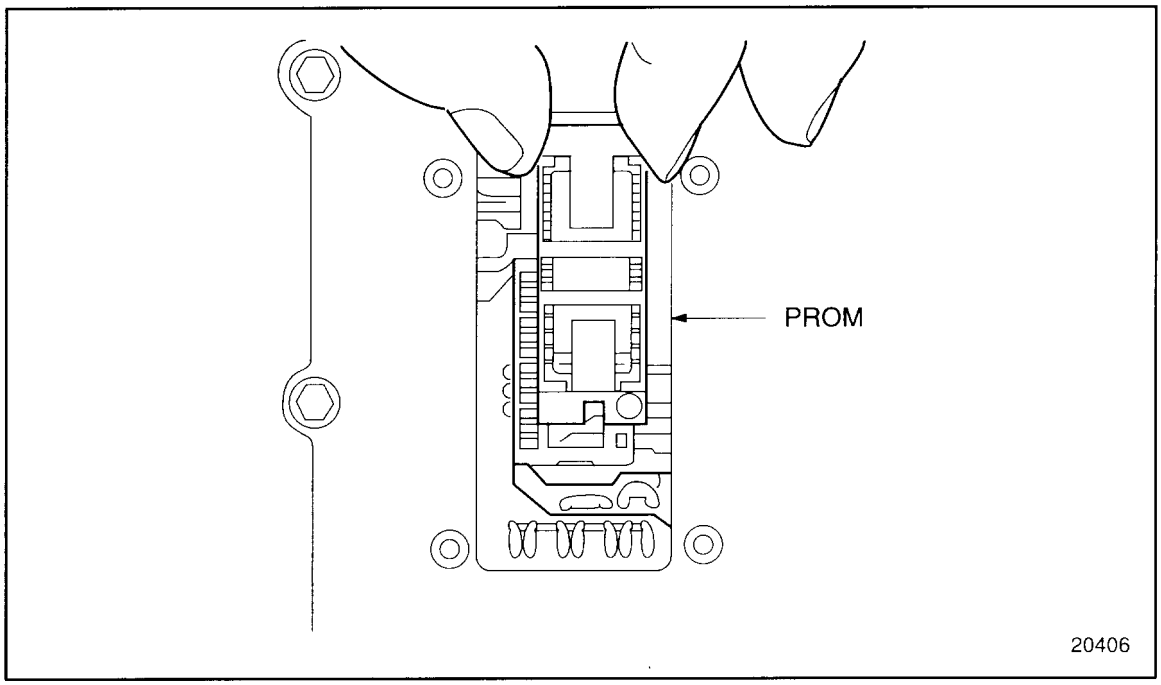

Figure 2-112 Indexing PROM for Installation

 Copyright © 2004 DETROIT DIESEL CORPORATION

NOTICE:
Do NOT press on the PROM. To avoid damaging the PROM, press on the carrier.

3. Press on the PROM carrier until it is firmly seated in the socket. See Figure 2-113.

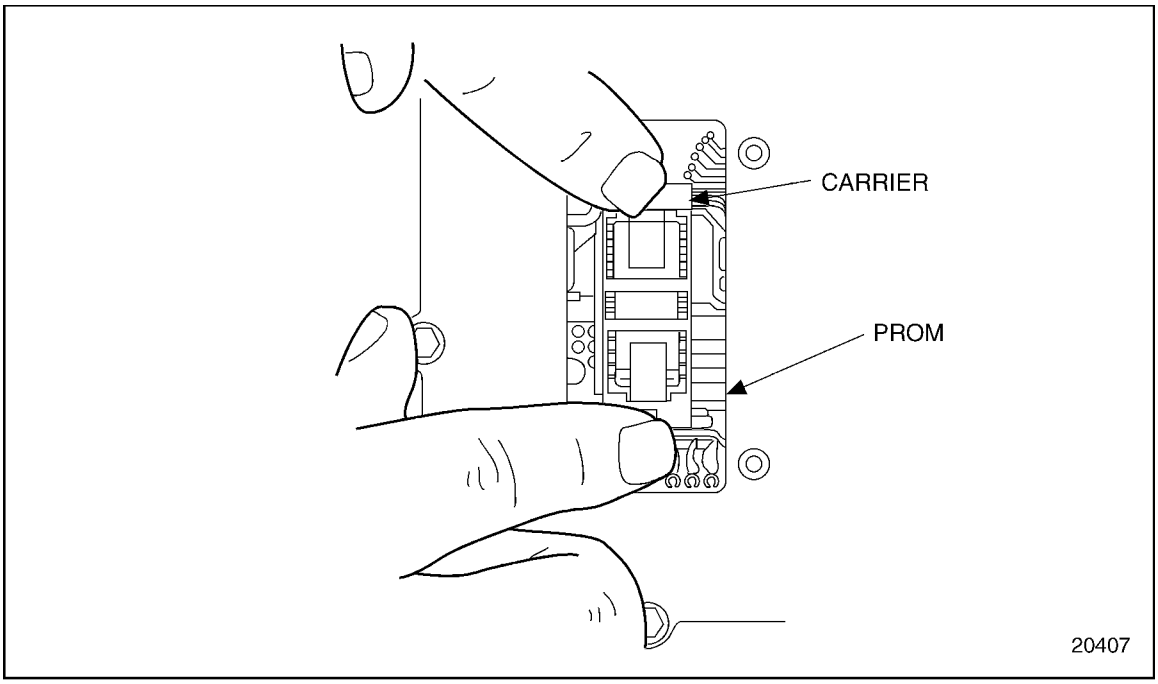

Figure 2-113 Installing PROM

4. Reinstall the access cover screws.
5. Place a security label over the access cover next to the original label.
6. Reinstall the ECM in the vehicle and plug in the connectors.
7. Tighten the connector hold-down screws.

NOTE:
In the event the PROM is defective, the DDL reader will not function. The check engine light must be used to read malfunction codes.

8. Turn the ignition to the ON position. Observe or read any diagnostic codes.
9. If code 51 occurs, check for the following conditions:
   - ☐ If it is necessary to check the PROM, follow removal instructions.
   - ☐ If not fully seated, press firmly on the carrier.
   - ☐ If pins are bent, remove the PROM, straighten pins, and reinstall the PROM.
   - ☐ If bent pins break or crack during straightening, discard the PROM and replace it.
   - ☐ If found defective, replace the PROM.
   - ☐ If the PROM is installed backwards, replace it.

(Rev. 2004) *All information subject to change without notice.*
6SE483 0401 Copyright © 2004 DETROIT DIESEL CORPORATION

2.23 ELECTRONIC DISTRIBUTOR UNIT DDEC I

The Electronic Distributor Unit (EDU) is mounted in a die-cast aluminum housing with sealed electrical connectors. For a typical engine location, see Figure 2-114.

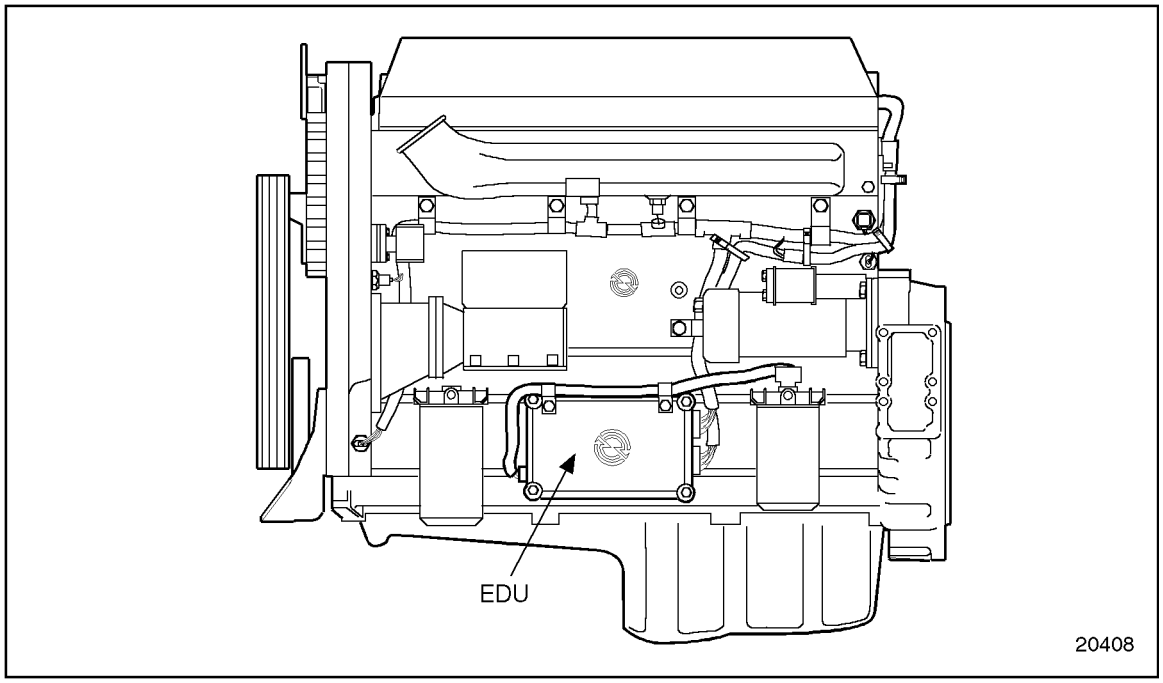

Figure 2-114 Electronic Distributor Unit and Related Parts

Heat generated by the EDU during engine operation is absorbed by a cold plate mounted between the EDU and the engine block. Fuel from the fuel pump circulates through the cold plate and the secondary filter to the engine where it is used by the injectors.

The main function of the EDU is to generate electrical signals to operate the injector solenoids. These electrical signals are controlled by the ECM.

 Copyright © 2004 DETROIT DIESEL CORPORATION

2.23.1 Replacement of the Electronic Distributor Unit

The EDU is a sealed unit that must be replaced.

2.23.2 Removal of Electronic Distributor Unit

Remove the EDU as follows:

1. Disconnect the fuel line (at the secondary fuel filter) that runs from the EDU cold plate. Position the line over a suitable container to collect any fuel coming from the system.
2. Disconnect the inlet and return lines from the EDU cold plate.
3. Loosen, but do not remove, the two wire harness connector hold-down screws. Pull gently on the connectors to disengage them from the EDU sockets.
4. Remove the through-bolts and washers holding the EDU to the engine.
5. Remove the EDU and cold plate from the engine.
6. Remove the screws securing the cold plate to the EDU. Remove the cold plate from the EDU.

(Rev. 2004) *All information subject to change without notice.*
6SE483 0401 Copyright © 2004 DETROIT DIESEL CORPORATION

2.23.3 Installation of Electronic Distributor Unit

Install the EDU as follows:

1. Install the screws securing the cold plate to the EDU. Use Loctite® 262, or equivalent, on the cold plate-to-EDU screws. Torque to 9.5-12 N·m (84-106 lb·in.).
2. Install the cold plate to the EDU.
3. Install the EDU and cold plate to the engine.
4. Install the through-bolts and washers holding the EDU to the engine. Torque the EDU-to-engine bolts to 30-38 N·m (22-28 lb·ft). Torque the EDU connector hold down screws to 2.4-3.0 N·m (21-26 lb·in.).

NOTE:
Torque the harness connector to EDU screws to 2.4-3.0 N·m (21-26 lb·in.).

5. Connect the inlet and return lines to the EDU cold plate.
6. Connect the fuel line (at the secondary fuel filter) that runs from the EDU cold plate.
7. Turn the ignition to the ON position. Observe the DDR for any diagnostic code(s). If any code(s) other than code 25 is logged, refer to the *Detroit Diesel Single ECM Troubleshooting Manual* (6SE497).

 Copyright © 2004 DETROIT DIESEL CORPORATION

CAUTION:

To avoid injury before starting and running the engine, ensure the vehicle is parked on a level surface, parking brake is set, and the wheels are blocked.

CAUTION:

Diesel engine exhaust and some of its constituents are known to the State of California to cause cancer, birth defects, and other reproductive harm.

- ☐ **Always start and operate an engine in a well ventilated area.**
- ☐ **If operating an engine in an enclosed area, vent the exhaust to the outside.**
- ☐ **Do not modify or tamper with the exhaust system or emission control system.**

8. Start the engine and check for fuel leaks.
9. Shut down upon completion of test.

(Rev. 2004) *All information subject to change without notice.*
6SE483 0401 Copyright © 2004 DETROIT DIESEL CORPORATION

2.24 ELECTRONIC FOOT PEDAL ASSEMBLY

The Electronic Foot Pedal Assembly (EFPA) connects the accelerator pedal to a Throttle Position Sensor (TPS). See Figure 2-115. The TPS is a device that sends an electrical signal to the ECM. The signal varies in voltage according to the pressure on the pedal. The system is installed in the space normally occupied by the mechanical foot pedal. The EFPA has maximum and minimum stops that are built into the unit during manufacture.

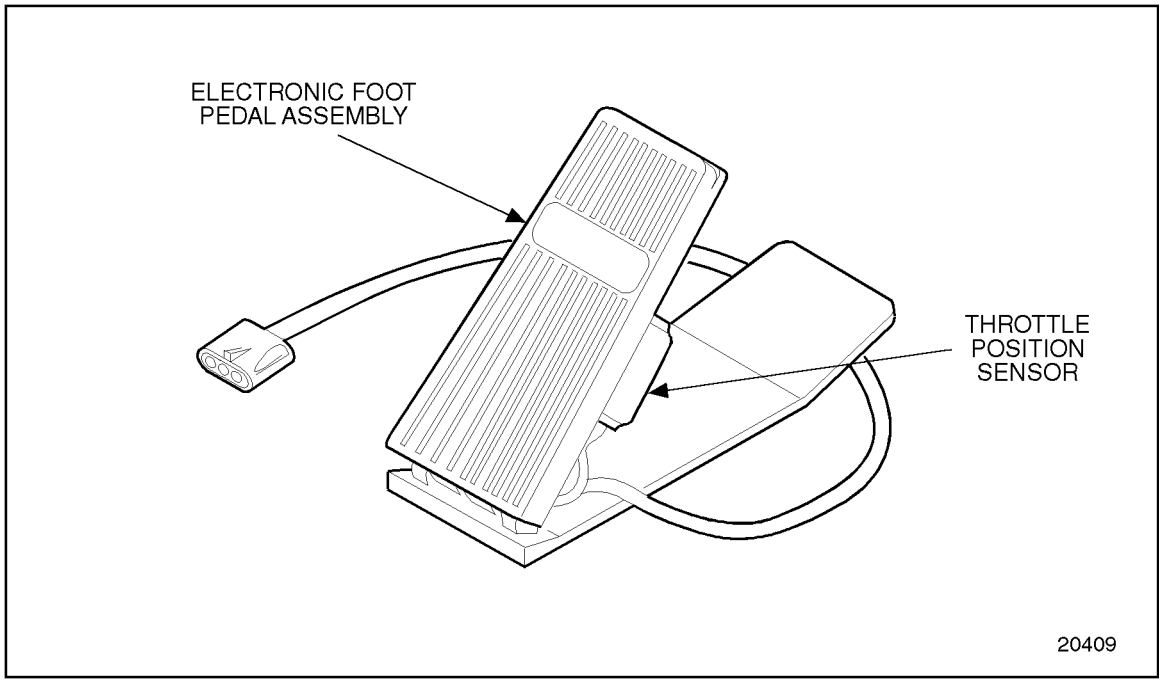

Figure 2-115 Electronic Foot Pedal Assembly

2.24.1 Replacement of Electronic Foot Pedal Assembly

The EFPA assembly is supplied by the vehicle manufacturer. Refer to the guidelines for service procedure.

 Copyright © 2004 DETROIT DIESEL CORPORATION

2.25 TURBO BOOST PRESSURE SENSOR

The Series 60 Diesel Turbo Boost Sensor (TBS) is mounted to the intake manifold with two bolts. A rubber O-ring is used to seal the sensor to the manifold. See Figure 2-116.

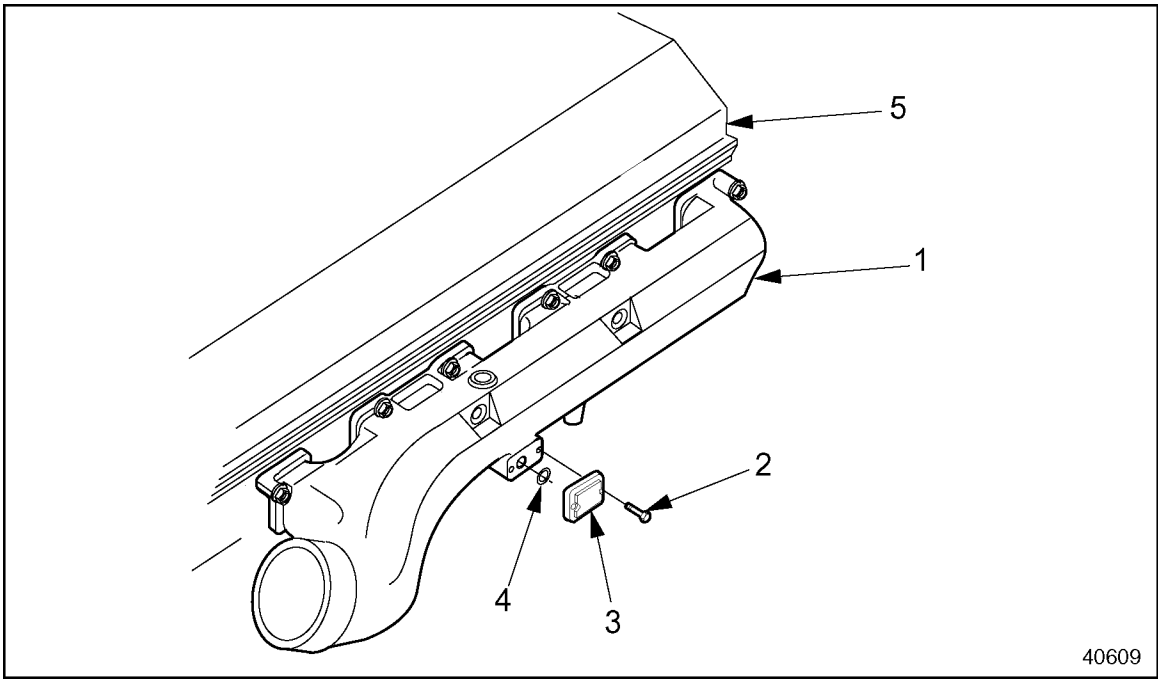

1. Intake Manifold
2. Turbo-Boost Pressure Sensor Bolt
3. Turbo-Boost Pressure Sensor
4. O-ring

Figure 2-116 Turbo Boost Pressure Sensor

NOTE:
The DDEC I and DDEC II Turbo Boost Sensors are not identical and must not be mixed up.

This device is a pressure sensor that sends an electrical signal to the ECM. The ECM uses this information to compute the amount of air entering the engine. Fuel supply is regulated by the TBS information to control engine smoke.

2.25.1 Replacement of Turbo Boost Sensor

The TBS is non-serviceable and must be replaced as an assembly. No adjustment is required.

(Rev. 2004) *All information subject to change without notice.*
6SE483 0401 Copyright © 2004 DETROIT DIESEL CORPORATION

2.25.2 Removal of Turbo Boost Sensor

Remove the TBS as follows:

1. Disengage the locking tang on the TBS connector body. Grasp the terminal body and gently pull it from the sensor.
2. Remove the two bolts that secure the TBS to the intake manifold.

NOTE:
Be careful not to lose the O-ring.

3. Remove the TBS from the intake manifold.

2.25.3 Installation of Turbo Boost Sensor

Install the Series 60 diesel TBS as follows:

NOTE:
The TBS is an electronic device. Use care during installation.

1. Apply petroleum jelly to the O-ring.
2. Install O-ring to the TBS.

NOTICE:
Do not overtighten the bolts that mount the TBS to the intake manifold. Damage to the TBS may result. Torque the bolts to no more than 2.4 - 3.0 N·m (21 - 26 in·lb).

3. Install the TBS to the intake manifold.
4. Install the two bolts that secure the TBS to the intake manifold. Torque to 2.4-3.0 N·m (21-26 lb·in.).
5. Engage the locking tang on the TBS connector body. Grasp the terminal body and gently pull it towards the sensor.
6. Turn the ignition to the ON position. Observe the DDR for any diagnostic code(s). If any code(s) other than code 25 is logged, refer to the *Detroit Diesel Single ECM Troubleshooting Manual* (6SE497).

 Copyright © 2004 DETROIT DIESEL CORPORATION

2.26 AIR INTAKE PRESSURE SENSOR

The Series 60G Air Intake Pressure (AIP) sensor is threaded into the intake manifold. See Figure 2-117. The Series 60G natural gas engines use a wide range sensor that allows pressure measurement under conditions of either manifold vacuum or boost.

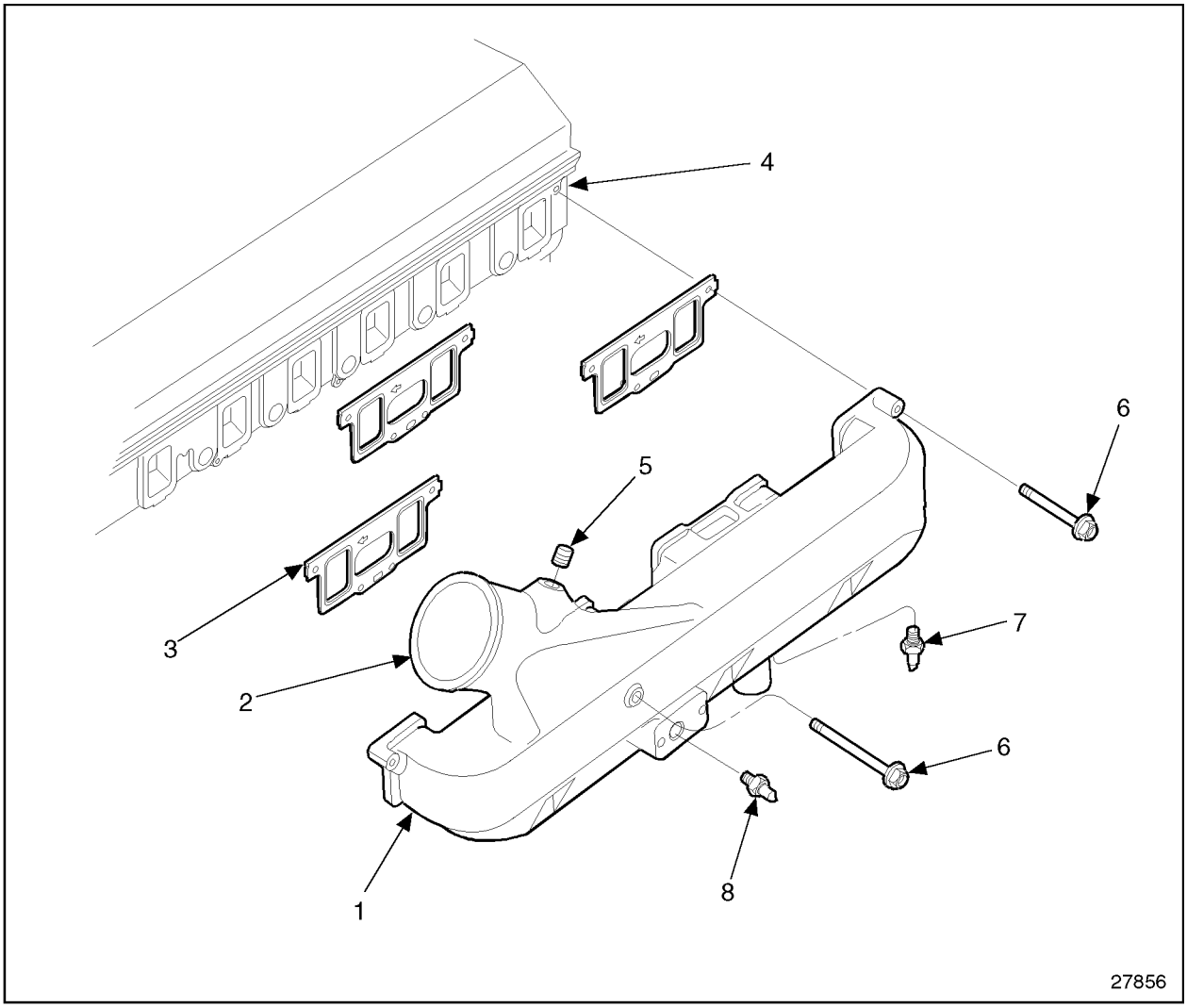

1. Intake Manifold
2. Intake Manifold Inlet
3. Intake Manifold Gasket
4. Cylinder Head
5. Bolt
6. Bolt
7. Air Temperature Sensor (Different location on the High Pressure Fuel System)
8. Air Intake Pressure Sensor (AIP)

Figure 2-117 Air Intake Pressure Sensor Series 60G Engine

(Rev. 2004) *All information subject to change without notice.*
6SE483 0401 Copyright © 2004 DETROIT DIESEL CORPORATION

This device is a pressure sensor that sends an electrical signal to the ECM. The ECM uses this information to compute the amount of air entering the engine. Fuel supply is regulated by the AIP sensor information to control engine air fuel ratio. The AIP sensor information is also used to control ignition timing.

NOTE:
For the location of the AIP sensor on the heat exchanger-cooled pleasure craft marine engine, refer to section 4.4. See Figure 2-118.

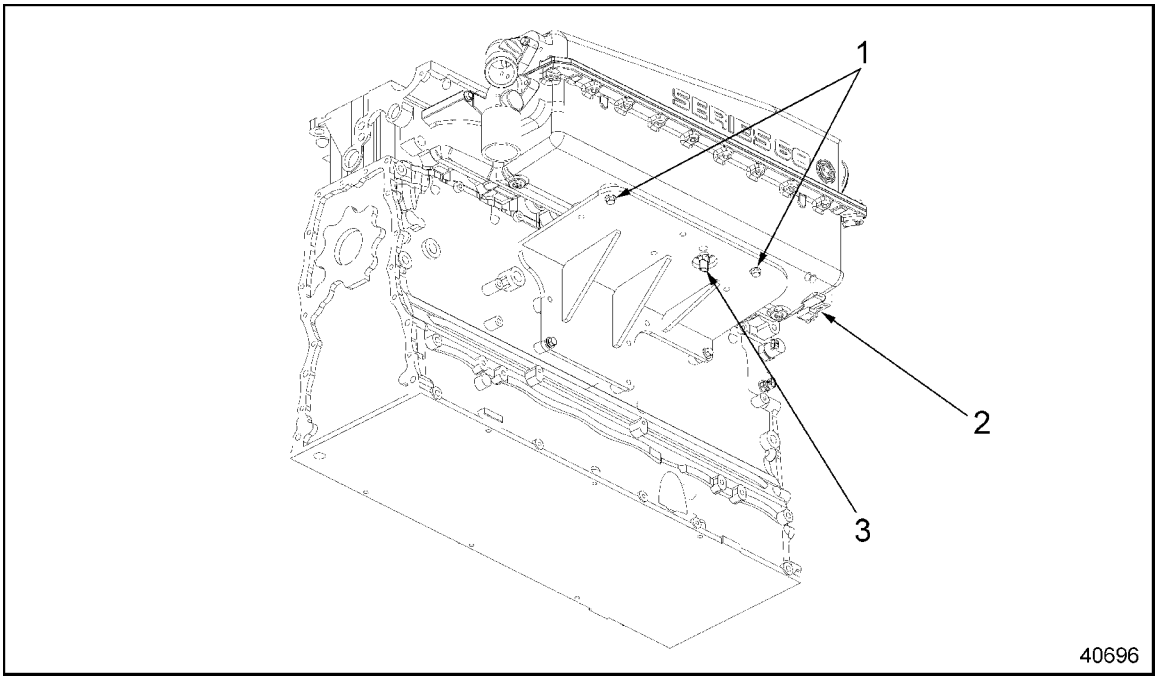

1. Charge Air Cooler Condensate Drains
2. Turbo Boost Pressure Sensor
3. Charge Air Temperature Sensor

Figure 2-118 Locations of Turbo Boost Pressure Sensor and Charge Air Temperature Sensor

2.26.1 Replacement of Air Intake Pressure Sensor

The AIP sensor is non-serviceable and must be replaced as an assembly. No adjustment is required.

2.26.2 Removal of Air Intake Pressure Sensor

Remove the AIP sensor as follows:

1. Disengage the locking tang on the AIP sensor connector body. Grasp the terminal body and gently pull it from the sensor.
2. Remove the AIP sensor from the intake manifold.

 Copyright © 2004 DETROIT DIESEL CORPORATION

2.26.3 Installation of Air Intake Pressure Sensor

Install the AIP as follows:

NOTE:
The AIP sensor is an electronic device. Use care during installation.

1. Install the AIP sensor into intake sensor manifold. Torque to 2.4-3.0 N·m (21-26 lb·in.).
2. Engage the locking tang on the AIP connector body.
3. Turn the ignition to the ON position. Observe the DDR for any diagnostic code(s). If any code(s) other than code 25 is logged, refer to the *Detroit Diesel Single ECM Troubleshooting Manual*(6SE497).

(Rev. 2004) *All information subject to change without notice.*
6SE483 0401 Copyright © 2004 DETROIT DIESEL CORPORATION

2.27 OIL PRESSURE SENSOR

The Oil Pressure Sensor (OPS) is installed into the main engine oil gallery. A typical location is the left rear corner of the cylinder block. See Figure 2-119.

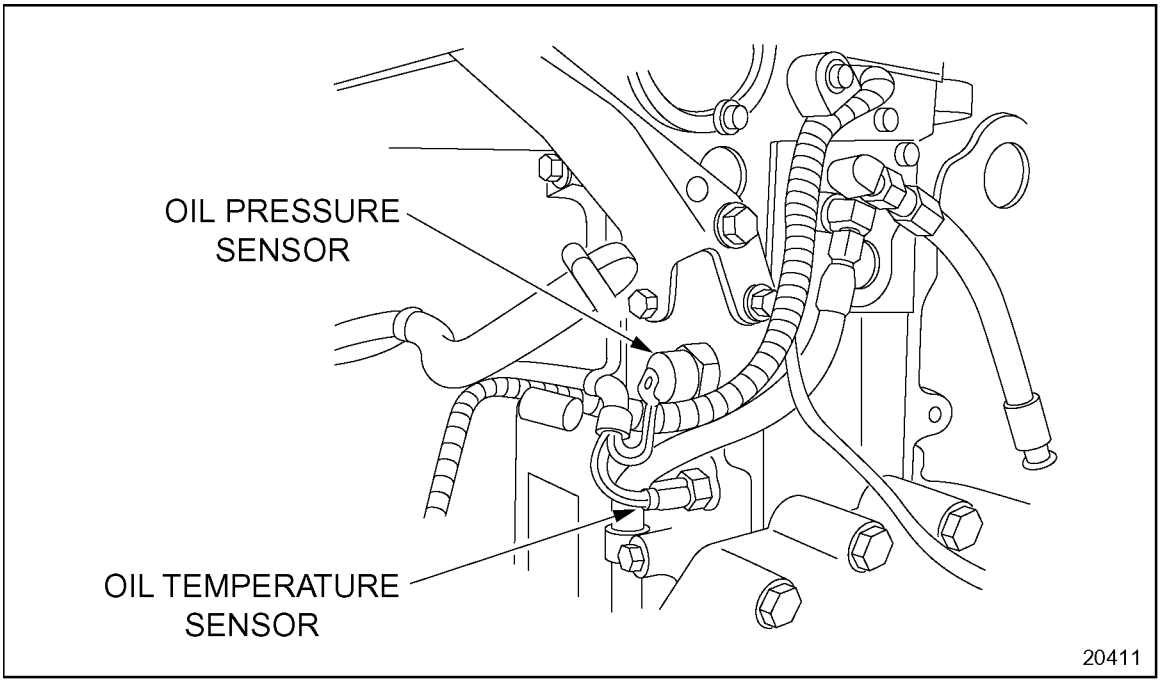

Figure 2-119 Engine Oil Pressure Sensor Location

The OPS sends an electrical signal to the ECM telling it what the engine oil pressure is at any given speed. A low oil pressure signal exceeding seven seconds is used by the ECM to begin the stop engine or warning function.

2.27.1 Replacement of the Oil Pressure Sensor

The OPS is non-serviceable and should be replaced as a unit. No adjustment is required.

2.27.2 Removal of Oil Pressure Sensor

Remove the OPS as follows:

1. Disengage the locking tang on the three-wire connector. Grasp the body of the connector and gently pull it free of the OPS.
2. Use the appropriate wrench on the hex end of the OPS to unscrew it from the engine.

 Copyright © 2004 DETROIT DIESEL CORPORATION

2.27.3 Installation of Oil Pressure Sensor

Install the OPS as follows:

NOTE:
The OPS is an electronic device. Use care on installation.

1. Place the sensor on the engine and using the appropriate wrench on the hex portion of the sensor tighten it.
2. Use Loctite® Pipe Sealer with Teflon, PT-7260, (or equivalent) on all but the first two threads of the OPS to prevent leaks.
3. Place the connector in the socket and engage the locking tang.
4. Turn the ignition to the ON position. Observe the DDR for any diagnostic code(s). If any code(s) other than code 25 is logged, refer to the *Detroit Diesel Single ECM Troubleshooting Manual* (6SE497).

(Rev. 2004) *All information subject to change without notice.*
6SE483 0401 Copyright © 2004 DETROIT DIESEL CORPORATION

2.28 OIL TEMPERATURE SENSOR

The Oil Temperature Sensor (OTS) is installed into the main engine oil gallery. A typical location is the left rear corner of the cylinder block. See Figure 2-120. The OTS sends an electrical signal to the ECM indicating engine oil temperature. The ECM uses this information to modify engine speed for better cold weather starts and faster warm-ups. Oil temperatures exceeding specification for two seconds or more will begin the stop engine or warning function.

NOTE:
Series 60G automotive (high pressure fuel system) engines do not have an oil temperature sensor. All DDEC and OEM functions reference coolant temperature.

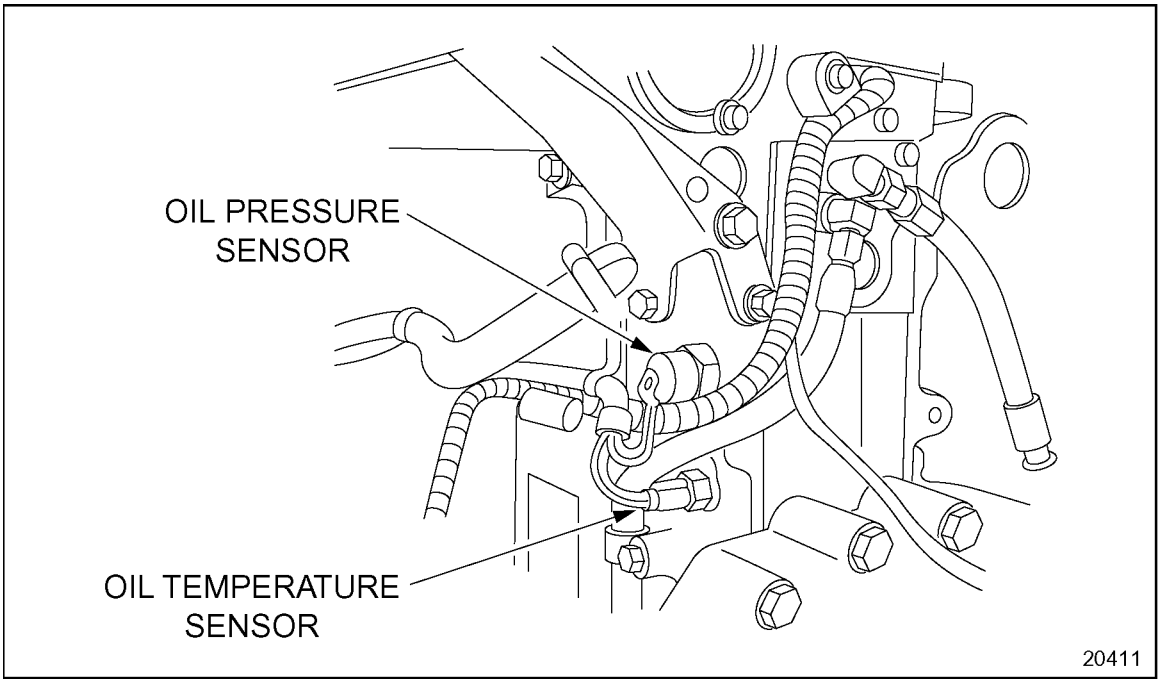

Figure 2-120 Engine Oil Temperature Sensor Location

2.28.1 Replacement of Oil Temperature Sensor

The OTS is non-serviceable, and is replaced as a unit. No adjustment is required.

2.28.2 Removal of Oil Temperature Sensor

Removal the OTS as follows:

1. Disengage the locking tang on the two-wire connector.
2. Grasp the body of the connector and gently pull it from the socket.
3. Use the appropriate wrench on the hex portion of the sensor and unscrew it.

 Copyright © 2004 DETROIT DIESEL CORPORATION

2.28.3 Installation of Oil Temperature Sensor

Install the OTS as follows:

NOTE:
The Oil Temperature Sensor is an electronic device. Use care in the installation process.

1. Place the sensor and using the appropriate wrench on the hex portion of the sensor tighten it.
2. Use Loctite® Pipe Sealer with Teflon, PT-7260 (or equivalent) on all but the first two threads of the OTS to prevent leaks.
3. Place the connector in the socket and engage the locking tang.
4. Turn the ignition to the ON position. Observe the DDR for any diagnostic code(s). If any code(s) other than code 25 is logged, refer to the *Detroit Diesel Single ECM Troubleshooting Manual* (6SE497).

(Rev. 2004) *All information subject to change without notice.*
6SE483 0401 Copyright © 2004 DETROIT DIESEL CORPORATION

2.29 AIR TEMPERATURE SENSOR

On DDEC III/IV engines there is an Air Temperature Sensor (ATS) mounted to the bottom of the intake manifold. The ATS sends an electrical signal to the ECM indicating the inlet manifold temperature of the air entering the engine. The ECM uses this information to adjust gas flow, control air fuel ratio and in some cases fan control. The ATS provides necessary input to vary hot idle speed and injection timing resulting in improved cold starts and reduced white smoke. See Figure 2-121 and see Figure 2-122.

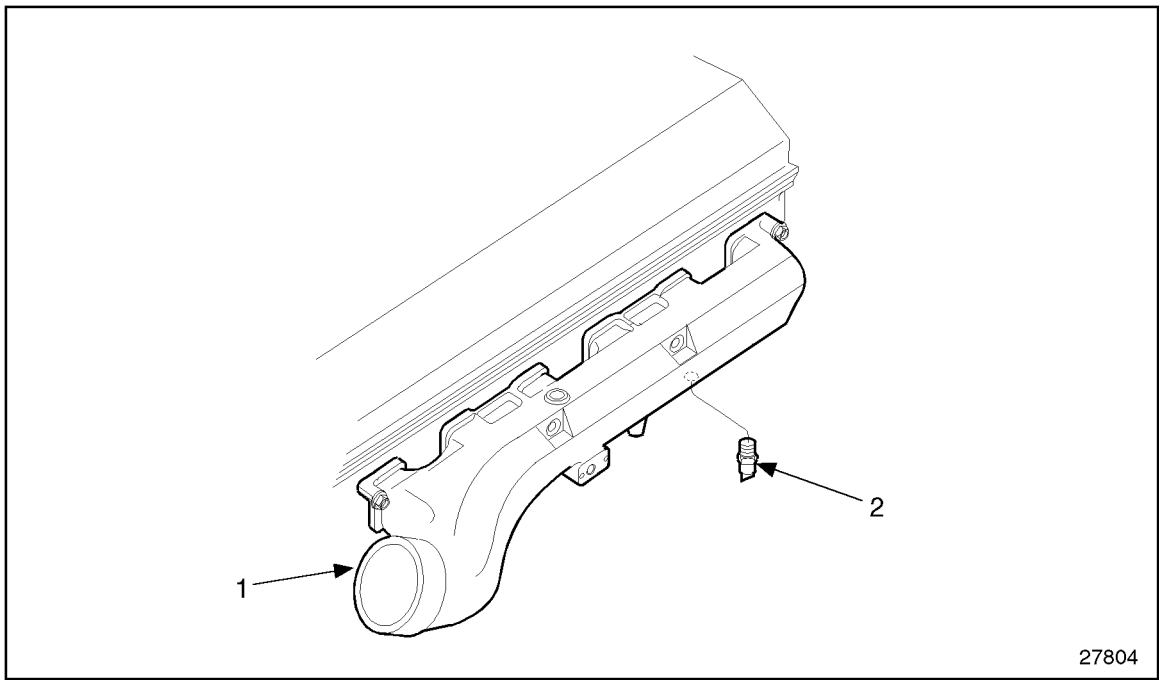

1. Intake Manifold
2. Air Intake Sensor

Figure 2-121 Air Temperature Sensor (All Diesel Except Heat Exchanger-Cooled Pleasure Craft Marine)

 Copyright © 2004 DETROIT DIESEL CORPORATION

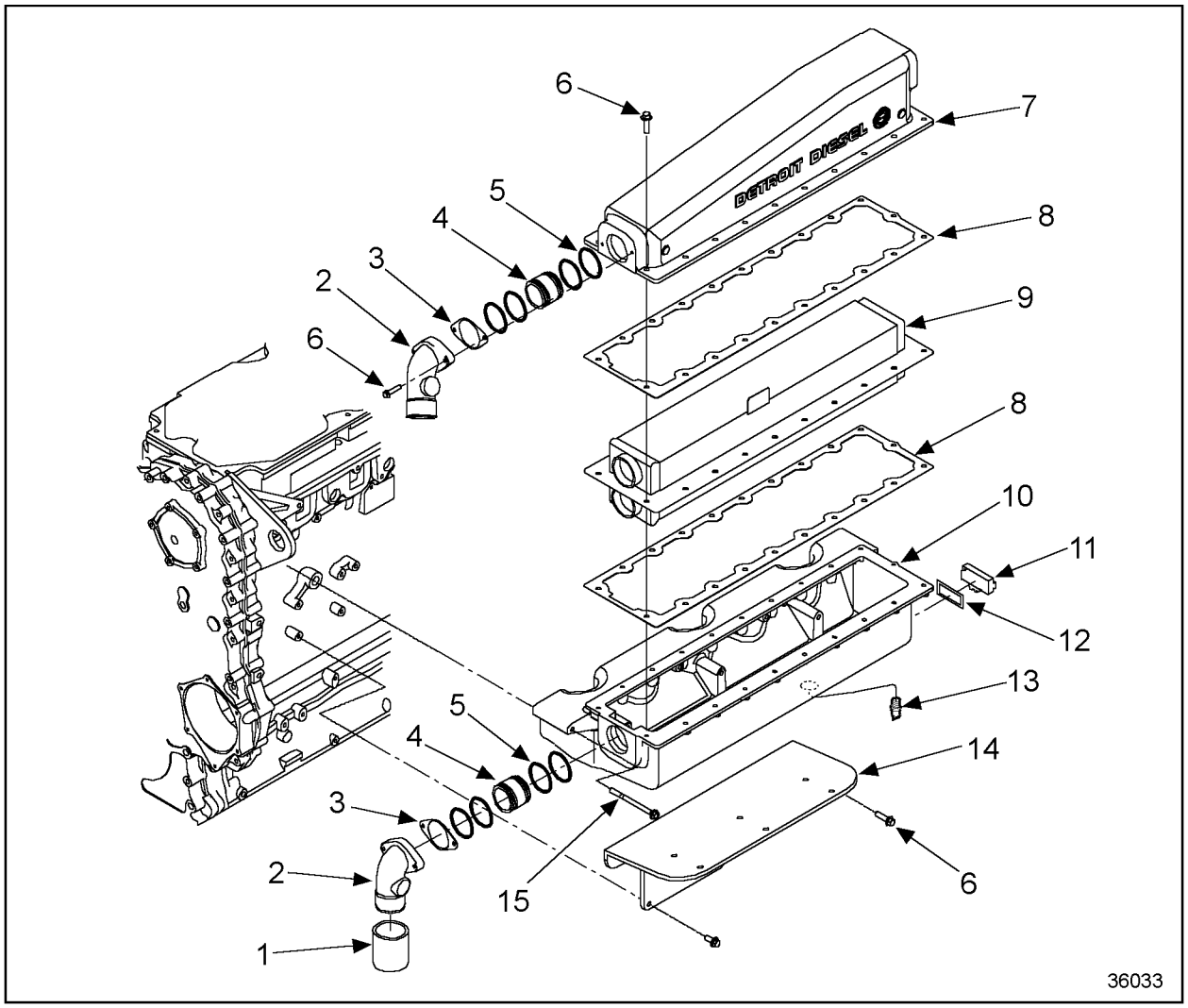

1. Hose
2. Elbow
3. Gasket
4. Sleeve
5. Seal Ring
6. Bolt
7. Housing Upper
8. Gasket
9. CAC Matrix
10. Housing Lower
11. Sensor
12. Seal Ring
13. Air Temperature Sensor
14. Bracket
15. Bolt

Figure 2-122 Air Temperature Sensor (Heat Exchanger-Cooled Pleasure Craft Marine)

(Rev. 2004) *All information subject to change without notice.*
6SE483 0401 Copyright © 2004 DETROIT DIESEL CORPORATION

The Series 60G natural gas engine air temperature sensor (ATS) is installed into the air inlet tube. See Figure 2-123. The ATS sends an electrical signal to the ECM indicating air inlet temperature. The ECM uses this information to adjust gas flow and control air fuel ratio.

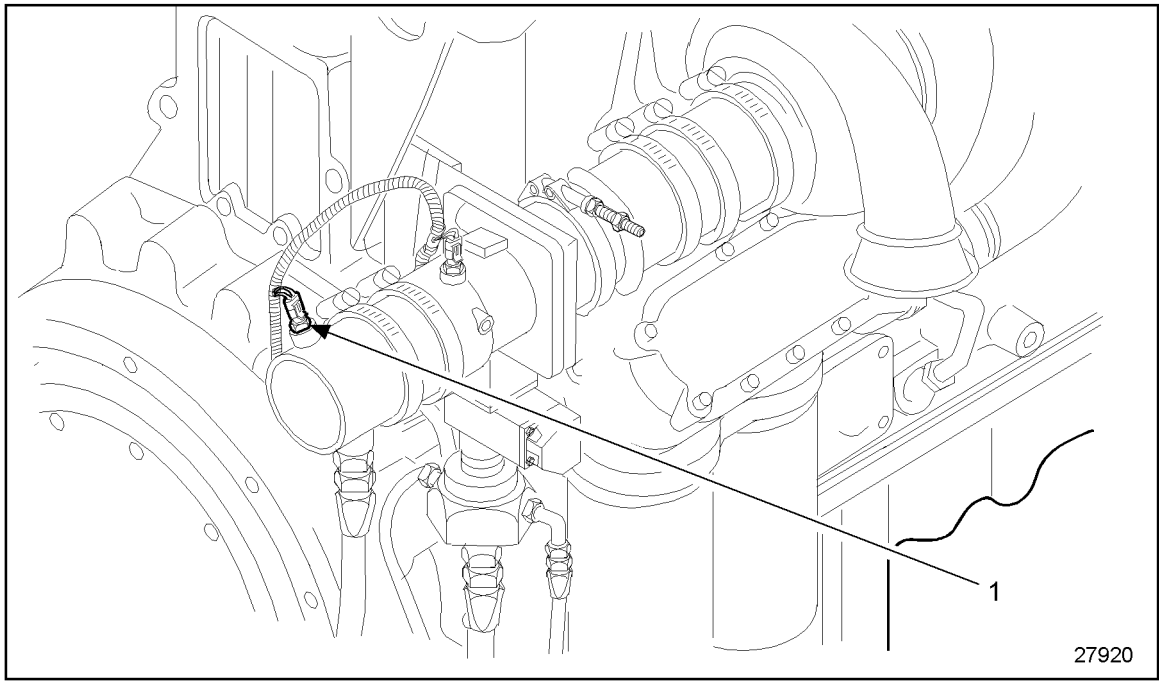

1. Air Temperature Sensor

Figure 2-123 Air Temperature Sensor

2.29.1 Repair or Replacement of Air Temperature Sensor

The ATS is non-serviceable, and is replaced as a unit. No adjustment is required.

2.29.2 Removal of Air Temperature Sensor

Remove the ATS as follows:

1. Disengage locking tang on two-wire connector.
2. Grasp body of the connector and gently pull it from the socket.
3. Use the appropriate wrench on the hex portion of the sensor and unscrew it from manifold.

 Copyright © 2004 DETROIT DIESEL CORPORATION

2.29.3 Installation of Air Temperature Sensor

Install the ATS as follows:

NOTICE:
Overtightening will distort and crack the sensor body, resulting in sensor malfunction. Damage may not be evident until sensor removal, when body may break apart.

1. If installing a new ATS, there is no need to use sealer as it is applied during manufacturing. When reinstalling a serviceable ATS, apply Loctite® pipe sealant with Teflon PT-7260 or equivalent on all but first two threads.
2. Install ATS to the intake manifold (diesel) or air inlet tube (natural gas).

NOTE:
Because of its plastic body, the ATS must be hand started and carefully tightened.

3. Torque to 11-16 N·m (8-12 lb·ft).
4. Carefully fasten connector onto sensor and engage locking tang.
5. Turn the ignition to the ON position. Observe the DDR for any diagnostic code(s). If any code(s) other than code 25 is logged, refer to the *Detroit Diesel Single ECM Troubleshooting Manual* (6SE497).

(Rev. 2004) *All information subject to change without notice.*
6SE483 0401 Copyright © 2004 DETROIT DIESEL CORPORATION

2.30 AIR TEMPERATURE SENSOR FOR HIGH PRESSURE FUEL SYSTEM

On DDEC III/IV engines there is an Air Temperature Sensor (ATS) mounted to the bottom of the inlet elbow. The ATS sends an electrical signal to the ECM indicating the inlet manifold temperature of the air entering the engine. The ECM uses this information to adjust gas flow, control air fuel ratio and in some cases fan control. The ATS provides necessary input to vary hot idle speed and injection timing resulting in improved cold starts and reduced white smoke. See Figure 2-121.

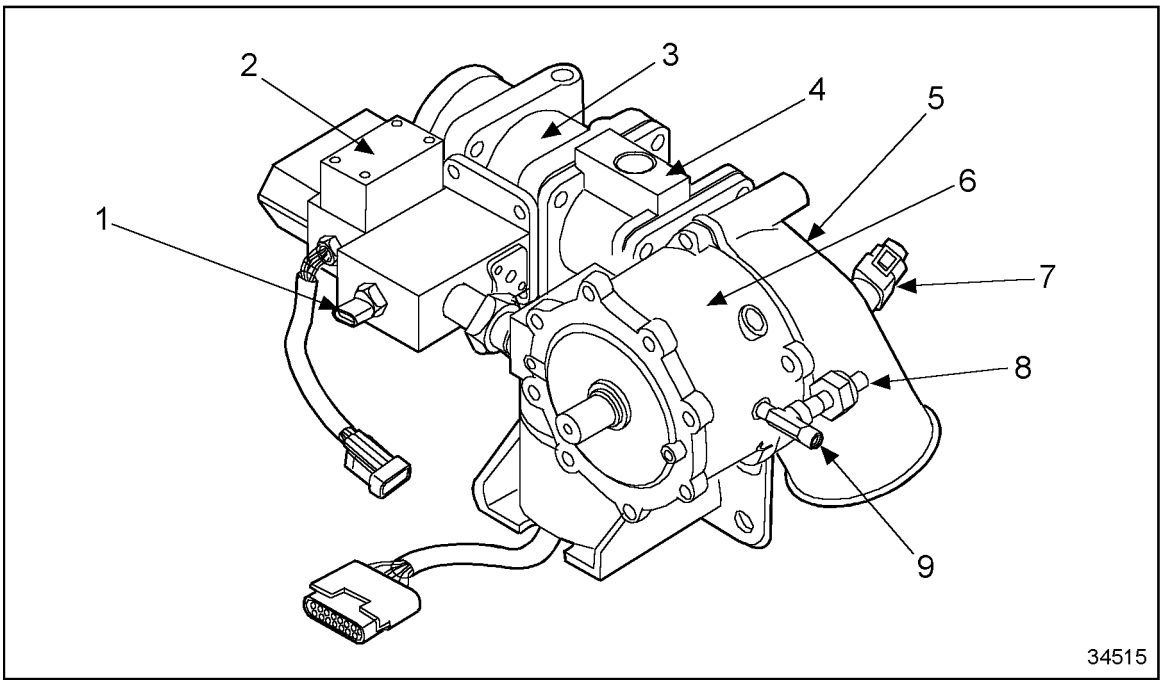

1. Fuel Temperature Sensor
2. PSV
3. Fuel Mixer
4. Throttle
5. Air Inlet Elbow
6. Low Pressure Regulator
7. Air Temperature Sensor
8. Fuel Pressure Sensor
9. Fuel Inlet Tee-Fitting

Figure 2-124 Fuel Temperature Sensor Series 60G Engine with High Pressure Fuel System

The Series 60 natural gas engine air temperature sensor (ATS) is installed into the air inlet tube. The ATS sends an electrical signal to the ECM indicating air inlet temperature. The ECM uses this information to adjust gas flow and control air fuel ratio.

 Copyright © 2004 DETROIT DIESEL CORPORATION

2.30.1 Repair or Replacement of Air Temperature Sensor for High Pressure Fuel System

The ATS is non-serviceable, and is replaced as a unit. No adjustment is required.

2.30.2 Removal of Air Temperature Sensor for High Pressure Fuel System

Remove the ATS as follows:

1. Disengage locking tang on two-wire connector.
2. Grasp body of the connector and gently pull it from the socket.
3. Use the appropriate wrench on the hex portion of the sensor and unscrew it from inlet elbow.

2.30.3 Installation of Air Temperature Sensor for High Pressure Fuel System

Install the ATS as follows:

NOTICE:
Overtightening will distort and crack the sensor body, resulting in sensor malfunction. Damage may not be evident until sensor removal, when body may break apart.

1. If installing a new ATS, there is no need to use sealer as it is applied during manufacturing. When reinstalling a serviceable ATS, apply Loctite® pipe sealant with Teflon PT-7260 (old number J 26558-92) or equivalent on all but first two threads.
2. Install ATS to the intake manifold (diesel) or air inlet tube (natural gas).

NOTE:
Because of its plastic body, the ATS must be hand started and carefully tightened.

3. Torque to 11-16 N·m (8-12 lb·ft).
4. Carefully fasten connector onto sensor and engage locking tang.
5. Turn the ignition to the ON position. Observe the DDR for any diagnostic code(s). If any code(s) other than code 25 is logged, refer to the *Detroit Diesel Single ECM Troubleshooting Manual*(6SE497).

(Rev. 2004) *All information subject to change without notice.*
6SE483 0401 Copyright © 2004 DETROIT DIESEL CORPORATION

2.31 COOLANT TEMPERATURE SENSOR

The Coolant Temperature Sensor (CTS) is mounted on the right rear corner of the cylinder head, behind the turbocharger. The CTS sends an electrical signal to the ECM indicating the engine coolant temperature. The CTS activates engine protection if coolant temperature exceeds the specified limits. See Figure 2-125.

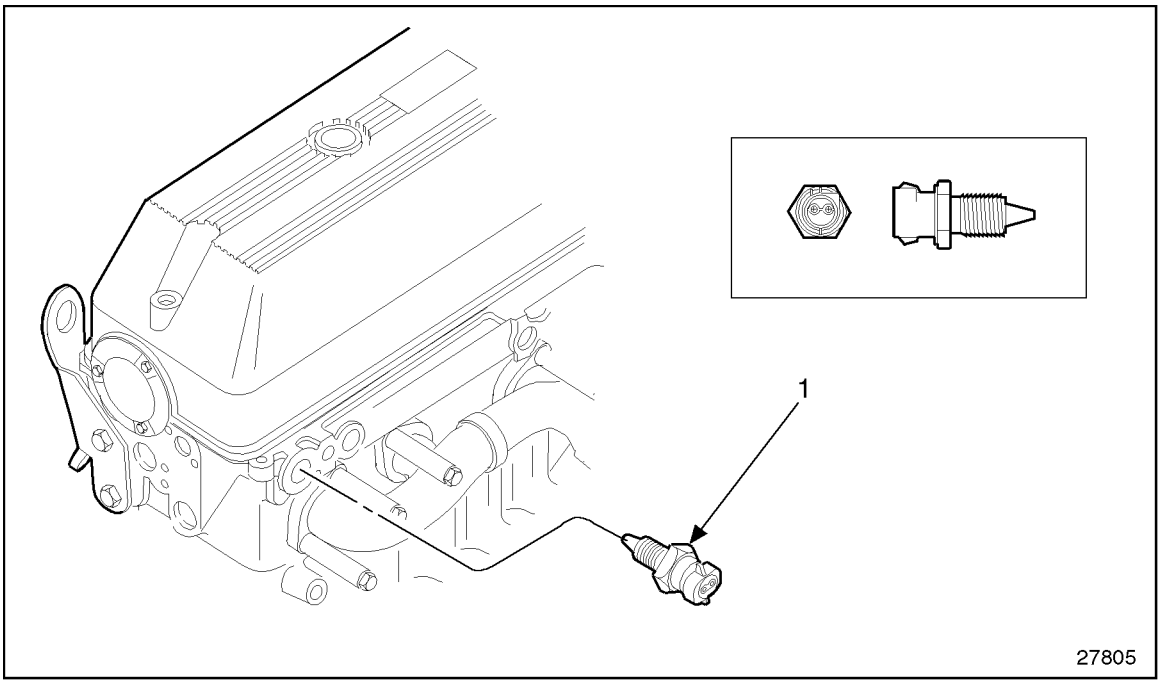

1. Air Intake Sensor

Figure 2-125 Coolant Temperature Sensor Location

 Copyright © 2004 DETROIT DIESEL CORPORATION

2.31.1 Repair or Replacement of Coolant Temperature Sensor

The CTS is non-serviceable, and is replaced as a unit. No adjustment is required.

2.31.2 Removal of Coolant Temperature Sensor

Remove the CTS as follows:

1. Disengage locking tang on two wire connector.
2. Grasp body of the connector and gently pull it from the socket.
3. Use the appropriate wrench on the hex portion of the sensor and unscrew it from the cylinder head.

2.31.3 Installation of Coolant Temperature Sensor

Install the CTS as follows:

1. Apply Loctite® pipe sealant with Teflon PT-7260 or equivalent on all but first two threads.
2. Install CTS to the cylinder head.
3. Torque to 102-127 N·m (75-94 lb·ft).
4. Carefully fasten two-wire connector onto sensor and engage locking tang.

(Rev. 2004) *All information subject to change without notice.*
6SE483 0401 Copyright © 2004 DETROIT DIESEL CORPORATION

2.32 SYNCHRONOUS REFERENCE SENSOR

The Synchronous Reference Sensor (SRS) is an electronic component that is mounted to the rear of the gear case. See Figure 2-126.

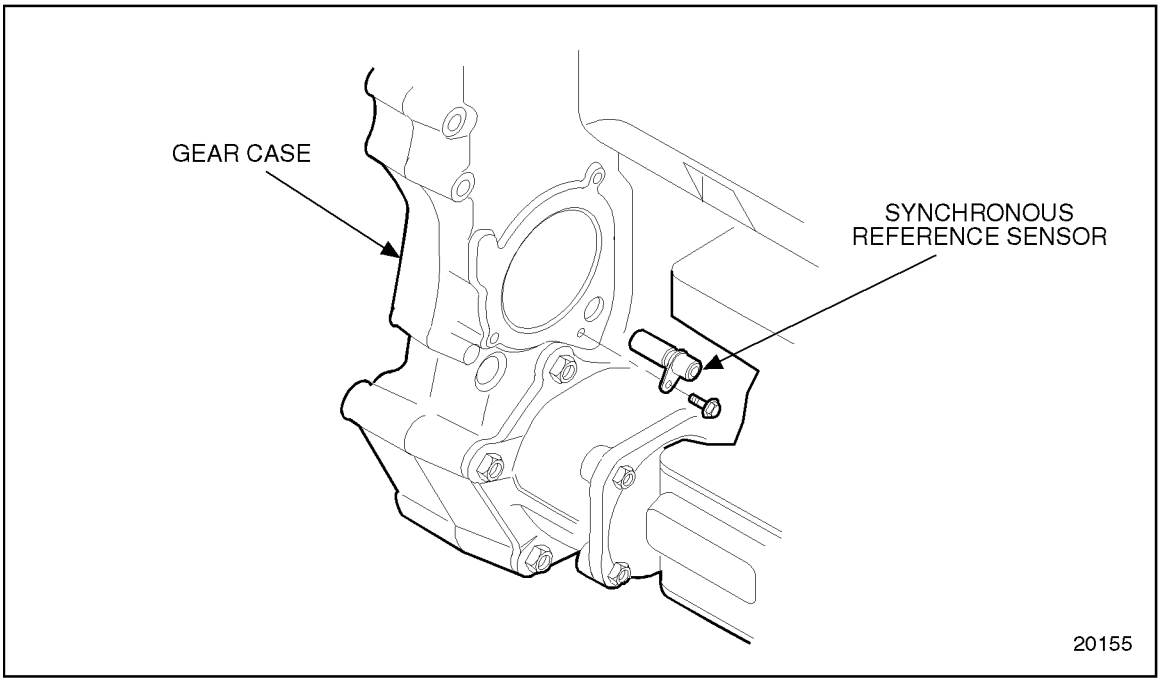

Figure 2-126 Synchronous Reference Sensor Location

NOTE:
The length of the SRS sensor element is 33.15-33.66 mm (1.305-1.325 in.).

The sensor portion of the SRS extends through a hole in the gear case, and is positioned very near the rear of the bull gear. A bolt, inserted through a hole in the SRS bracket, secures the SRS assembly to the gear case. The SRS connector is black in color.

 Copyright © 2004 DETROIT DIESEL CORPORATION

The SRS sends a signal to the ECM. This signal is generated by a raised metal pin on the rear of the bull gear. See Figure 2-127.

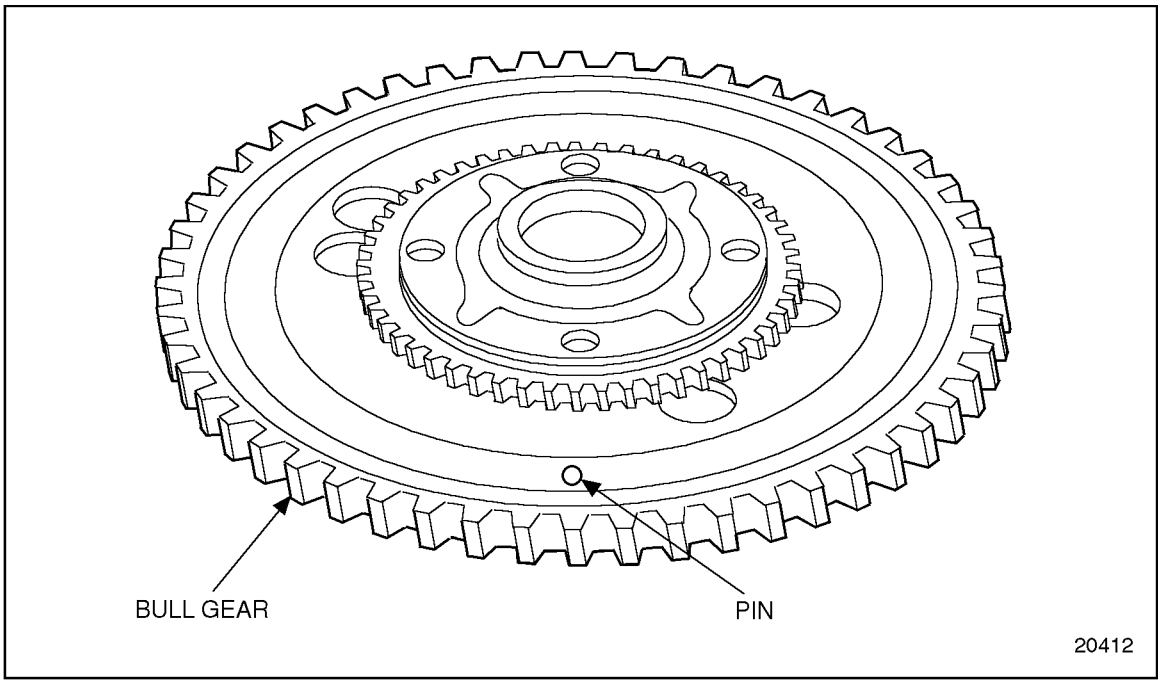

Figure 2-127 Bull Gear

The bull gear pin passes by the SRS as the number one piston reaches approximately 45 degrees before Top-Dead-Center (TDC). This information is used by the ECM to determine number one piston in the firing order.

(Rev. 2004) *All information subject to change without notice.*
6SE483 0401 Copyright © 2004 DETROIT DIESEL CORPORATION

2.32.1 Replacement of Synchronous Reference Sensor

The SRS is a non-serviceable item and is replaced as a unit. No adjustment is required.

2.32.2 Removal of Synchronous Reference Sensor

Remove the SRS as follows:

1. Disengage the locking tang on the SRS connector. Grasp the connector bodies and gently pull them apart.
2. Using a socket and long extension, remove the SRS bolt.
3. Remove the SRS by pulling it straight out of the gear case.

2.32.3 Installation of Synchronous Reference Sensor

Install the SRS as follows:

NOTE:
The SRS is an electronic component. Use care upon installation.

1. The O-ring on the sensor may be coated with clean engine oil for ease of installation.
2. Insert the SRS into the gear case and index the hole in the bracket with the hole in the gear case.
3. Insert the SRS bolt and torque it to 30-38 N·m (22-28 lb·ft).
4. Plug the connectors together, making sure the locking tang clicks into place.
5. Turn the ignition to the ON position. Observe the DDR for any diagnostic code(s). If any code(s) other than code 25 is logged, refer to the *Detroit Diesel Single ECM Troubleshooting Manual* (6SE497).

 Copyright © 2004 DETROIT DIESEL CORPORATION

2.33 TIMING REFERENCE SENSOR

The Timing Reference Sensor (TRS) is an electronic component that is mounted to the left side of the gear case, near the crankshaft centerline. See Figure 2-128.

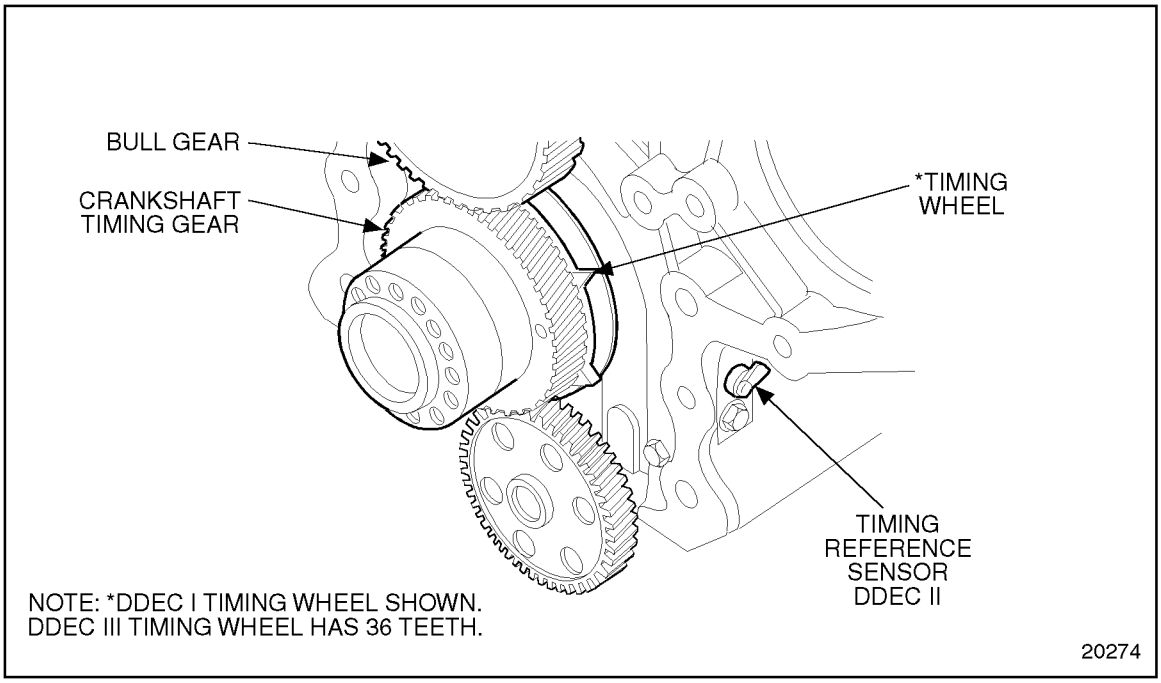

Figure 2-128 Timing Reference Sensor Location

NOTE:
The length of the TRS sensor element is 56.06-56.58 mm (2.207-2.227 in.).

The sensor portion of the TRS extends through an opening in the gear case, and is positioned near the teeth of the timing wheel. A bolt, inserted through a hole in the TRS bracket, secures the TRS assembly to the gear case. The TRS connector is gray in color.

The TRS sends a signal to the ECM. This signal is generated by a series of evenly spaced teeth on the timing wheel. As the timing wheel rotates with the crankshaft, a tooth passes by the TRS. These signals are used by the ECM to determine injector solenoid operation times and engine speed.

(Rev. 2004) *All information subject to change without notice.*
6SE483 0401 Copyright © 2004 DETROIT DIESEL CORPORATION

2.33.1 Replacement of Timing Reference Sensor

The TRS is a non-serviceable component and is replaced as a unit. No adjustment is required.

2.33.2 Removal of Timing Reference Sensor

Remove the TRS as follows:

1. Disengage the locking tang on the TRS connector. Grasp the connector bodies and gently pull them apart.
2. Remove the bolt that secures the TRS to the gear case.
3. Remove the TRS by pulling it straight out of the gear case.

2.33.3 Installation of Timing Reference Sensor

Install the TRS as follows:

NOTE:
The TRS is an electronic component. Use care upon installation.

1. The O-ring on the sensor may be coated with clean engine oil for ease of installation.
2. Insert the TRS into the gear case and index the hole in the bracket with the hole in the gear case.
3. Insert the TRS bolt and torque it to 30-38 N·m (22-28 lb·ft).
4. Plug the connectors together, making sure the locking tang clicks into place.
5. Turn the ignition to the ON position. Observe or read any diagnostic code(s). If any code other than code 25 appears, refer to the required *DDEC Troubleshooting Manual:* 6SE477 (DDEC I), 6SE489 (DDEC II), or 6SE497 (DDEC III/IV).

 Copyright © 2004 DETROIT DIESEL CORPORATION

2.34 COOLANT LEVEL SENSOR

The Coolant Level Sensor (CLS) is a two-piece sensor for DDEC II, and a single sensor for DDEC III/IV. See Figure 2-129. The sensor probe (supplied by the vehicle, vessel or equipment manufacturer) is mounted in the top tank or overfill tank. For DDEC II the sensor module is mounted on the vehicle. The module sends an electrical signal to the ECM to indicate coolant level. Low coolant will activate the stop engine function or warning function.

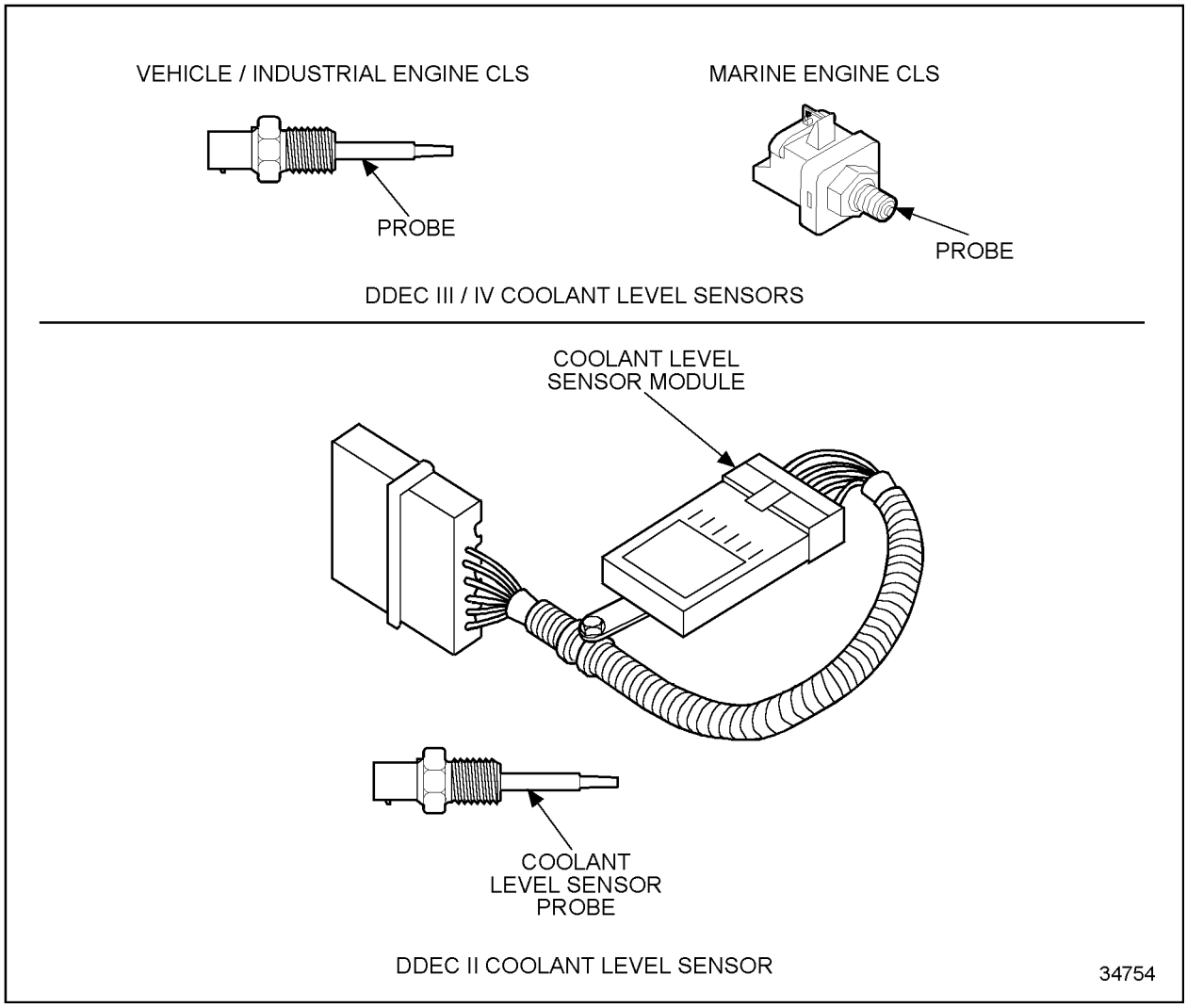

Figure 2-129 Coolant Level Sensors

(Rev. 2004) *All information subject to change without notice.*
6SE483 0401 Copyright © 2004 DETROIT DIESEL CORPORATION

2.34.1 Replacement of Coolant Level Sensor

Both the CLS sensor probe and module are non-serviceable and should be replaced as necessary.

2.34.2 Removal of Coolant Level Sensor

Remove the CLS as follows:

1. Open the drain cock at the bottom of the radiator and drain the coolant into an appropriate container. Remove only as much coolant as is necessary to clear the CLS probe.
2. Remove ground wire screw and ground wire from side of probe.
3. Loosen and remove nut from sensor lead of probe.
4. Remove sensor lead, or unplug the two-pin connector.
5. Use the appropriate wrench on the hex portion of the sensor and unscrew it from the radiator.

2.34.3 Installation of Coolant Level Sensor Probe

Install the CLS Probe as follows:

1. Install CLS probe into the radiator or heat exchanger as follows:

NOTE:
New sensors are pre-coated with a thread sealer. If sensor is new, no additional sealant is required. If sensor is reused, apply Loctite® 567 pipe sealant with Teflon® or equivalent.

Loctite® is a registered trademark of the Loctite Corporation.

Teflon® is a registered trademark of the E. I. DuPont de Nemours and Company, Inc.

[a] Install and torque vehicle or industrial engine CLS to 8–10 lb·ft (11–14 N·m).

[b] Install and torque marine engine CLS to 4–6 lb·ft (5–8 N·m).

2. Connect the two-pin connector.
3. Fill the cooling system. Refer to section 13.13.4.
4. Turn the ignition to the ON position. Observe or read any diagnostic code(s). If any code other than code 25 appears, refer to the *DDEC Troubleshooting Guide:* 6SE477 (DDEC I), 6SE489 (DDEC II), or 6SE497 (DDEC III/IV).

 Copyright © 2004 DETROIT DIESEL CORPORATION

CAUTION:

To avoid injury before starting and running the engine, ensure the vehicle is parked on a level surface, parking brake is set, and the wheels are blocked.

CAUTION:

Diesel engine exhaust and some of its constituents are known to the State of California to cause cancer, birth defects, and other reproductive harm.

- ☐ **Always start and operate an engine in a well ventilated area.**
- ☐ **If operating an engine in an enclosed area, vent the exhaust to the outside.**
- ☐ **Do not modify or tamper with the exhaust system or emission control system.**

5. Start the engine and check for leaks.
6. Shut down engine upon completion of test. Perform necessary repairs.

(Rev. 2004) *All information subject to change without notice.*
6SE483 0401 Copyright © 2004 DETROIT DIESEL CORPORATION

2.34.4 Removal of Coolant Level Sensor Module

Remove the CLS module as follows:

1. Disengage the locking tang on the CLS module connector. Grasp the connector bodies and gently pull them apart.
2. Remove module from vehicle.

2.34.5 Installation of Coolant Level Sensor Module

Install the CLS Module as follows:

NOTICE:
Use care during the installation of the CLS module or damage may occur.

1. Insert the CLS module to the vehicle.
2. Grasp both connector bodies. Gently push them together and engage locking tang on the CLS module connector.

 Copyright © 2004 DETROIT DIESEL CORPORATION

2.35 FUEL PRESSURE SENSOR

The Fuel Pressure Sensor (FPS) is installed into the secondary fuel filter. The FPS is not used in all applications. The FPS sends an electrical signal to the ECM telling it what the engine fuel pressure is at any given speed. See Figure 2-130.

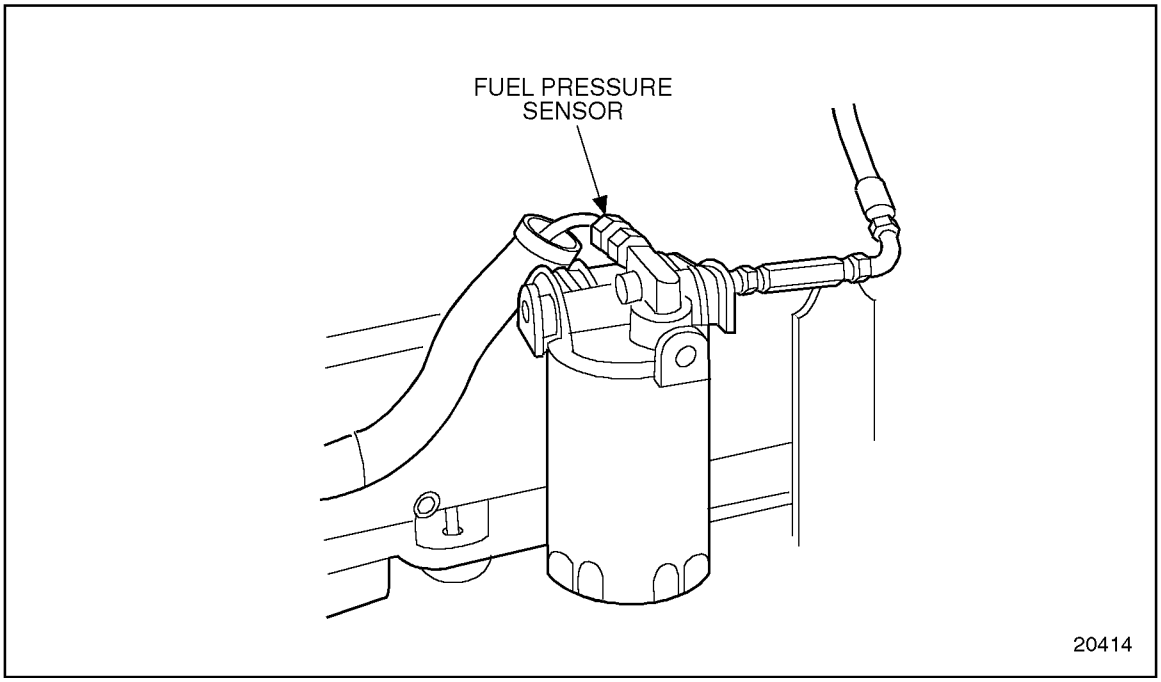

Figure 2-130 Fuel Pressure Sensor Location (Industrial Application Only)

(Rev. 2004) *All information subject to change without notice.*
6SE483 0401 Copyright © 2004 DETROIT DIESEL CORPORATION

On Series 60G engines with the high pressure fuel system the fuel pressure sensor is installed in a tee at the inlet to the low pressure regulator. See Figure 2-131.

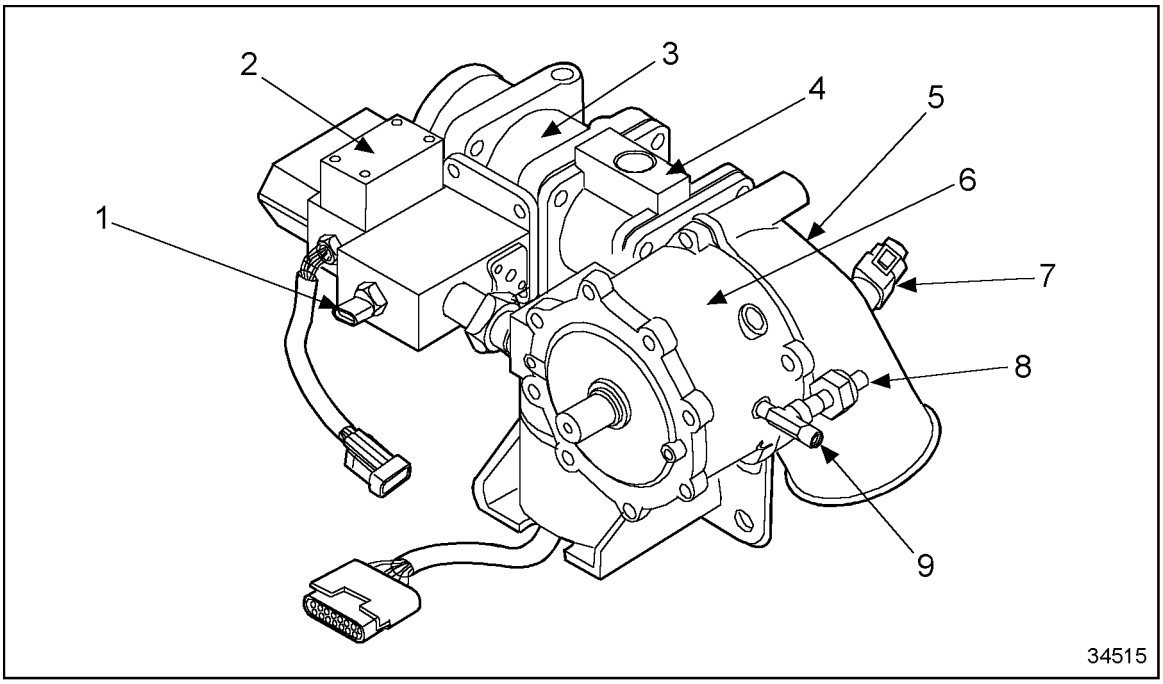

1. Fuel Temperature Sensor
2. PSV
3. Fuel Mixer
4. Throttle
5. Air Inlet Elbow
6. Low Pressure Regulator
7. Air Temperature Sensor
8. Fuel Pressure Sensor
9. Fuel Inlet Tee Fitting

Figure 2-131 Fuel Pressure Sensor for Series 60G

 Copyright © 2004 DETROIT DIESEL CORPORATION

2.35.1 Replacement of Fuel Pressure Sensor

The FPS is non-serviceable and should be replaced as a unit. No adjustment is required.

2.35.2 Removal of Fuel Pressure Sensor

Remove the FPS as follows:

1. Disengage the locking tang on the three-wire connector. Grasp the body of the connector and gently pull it free of the FPS.
2. Use the appropriate wrench on the hex end of the FPS to unscrew it from the filter.

2.35.3 Installation of Fuel Pressure Sensor

Install the FPS as follows:

NOTICE:
The FPS is an electrical device. Use care on installation or damage may occur.

1. Use Loctite® Pipe Sealant with Teflon, PT-7260 (or equivalent) on all but the first two threads of the FPS to prevent leaks.
2. Screw FPS into the filter.
3. Engage locking tang.
4. Turn the ignition to the ON position. Observe the DDR for any diagnostic code(s). If any code(s) other than code 25 is logged, refer to the *Detroit Diesel Single ECM Troubleshooting Manual* (6SE497).

(Rev. 2004) *All information subject to change without notice.*
6SE483 0401 Copyright © 2004 DETROIT DIESEL CORPORATION

2.36 FUEL TEMPERATURE SENSOR

The Series 60 diesel engine Fuel Temperature Sensor (FTS) is installed into the secondary fuel filter. See Figure 2-132. The FTS sends an electrical signal to the ECM indicating fuel inlet temperature. The ECM uses this information to calculate fuel consumption.

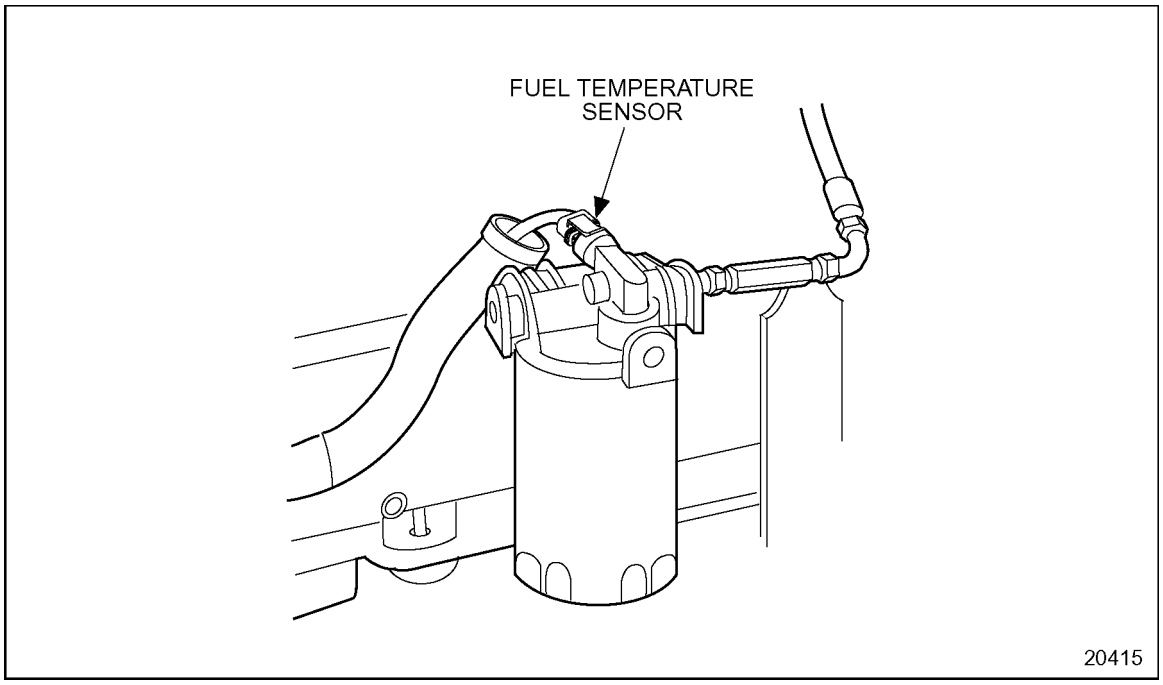

Figure 2-132 Fuel Temperature Sensor Location (Series 60 Diesel Engine)

 Copyright © 2004 DETROIT DIESEL CORPORATION

The Series 60 genset natural gas engine Fuel Temperature Sensor (FTS) is installed into the gas mixer housing. See Figure 2-133. The FTS sends an electrical signal to the ECM indicating fuel inlet temperature. The ECM uses this information to adjust gas flow and control air fuel ratio.

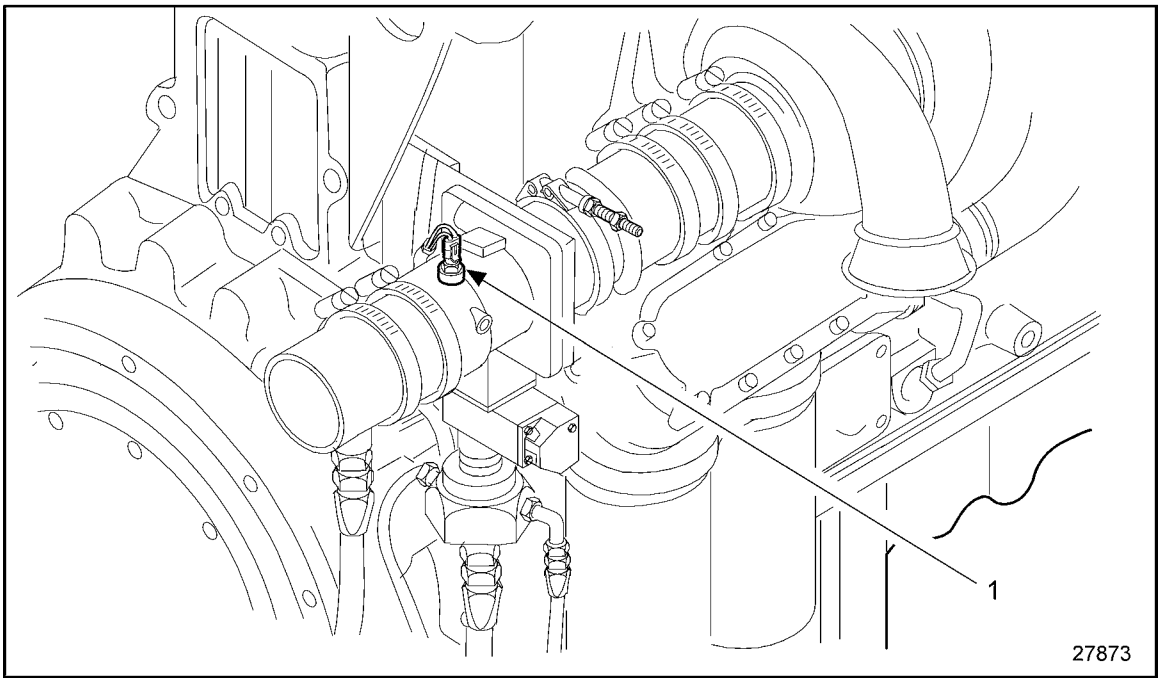

1. Fuel Temperature Sensor

Figure 2-133 Fuel Temperature Sensor Location (Series 60G Genset Application)

(Rev. 2004) *All information subject to change without notice.*
6SE483 0401 Copyright © 2004 DETROIT DIESEL CORPORATION

On Series 60G engines with the high pressure fuel system the fuel temperature sensor is located in the PSV. See Figure 2-134.

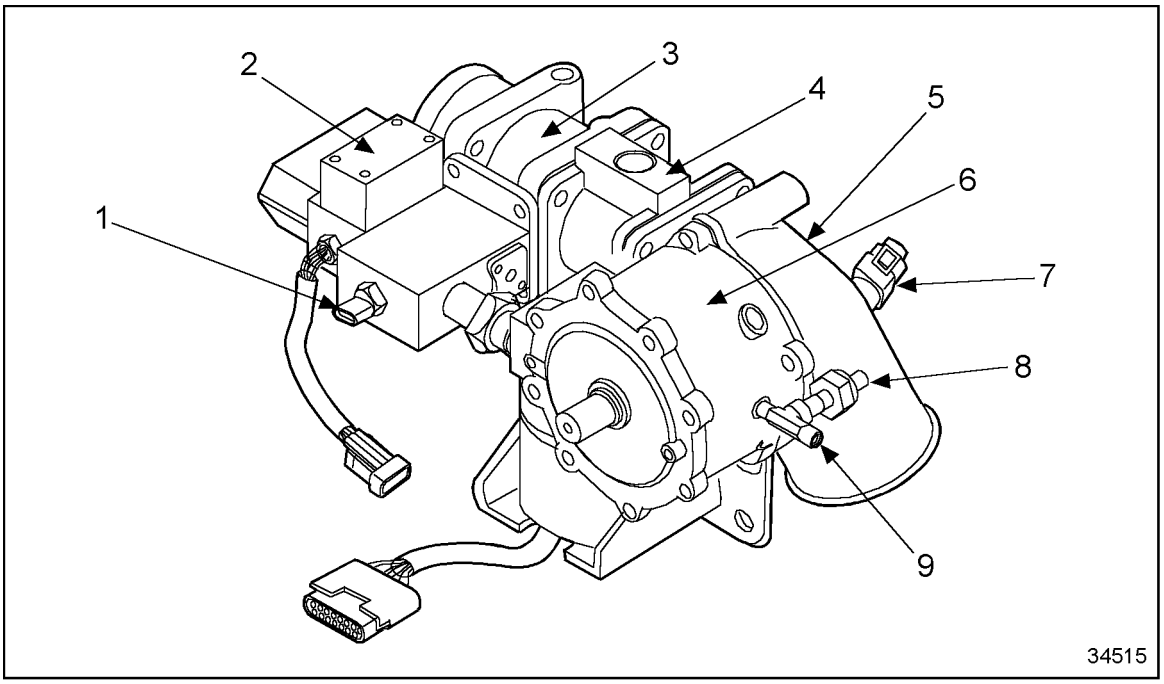

1. Fuel Temperature Sensor
2. PSV
3. Fuel Mixer
4. Throttle
5. Air Inlet Elbow
6. Low Pressure Regulator
7. Air Temperature Sensor
8. Fuel Pressure Sensor
9. Fuel Inlet Tee Fitting

Figure 2-134 Fuel Temperature Sensor Series 60G Engine with High Pressure Fuel System

 Copyright © 2004 DETROIT DIESEL CORPORATION

2.36.1 Replacement of Fuel Temperature Sensor

The FTS is non-serviceable and should be replaced as a unit. No adjustment is required.

2.36.2 Removal of Fuel Temperature Sensor

Remove the FTS as follows:

1. Disengage the locking tang on the two-wire connector. Grasp the body of the connector and gently pull it from the socket.
2. Use the appropriate wrench on the hex portion of the sensor and unscrew it from the fitting.

2.36.3 Installation of Fuel Temperature Sensor

Install the FTS as follows:

NOTICE:
The Fuel Temperature Sensor is an electrical device. Use care in the installation process or damage may occur.

1. Use Loctite® Pipe sealer with Teflon PT-7260 (or equivalent) on all but the first two threads of the FTS to prevent leaks.
2. Screw the FTS into the fitting or housing.
3. Engage locking tang.
4. Turn the ignition to the ON position. Observe the DDR for any diagnostic code(s). If any code(s) other than code 25 is logged, refer to the *Detroit Diesel Single ECM Troubleshooting Manual* (6SE497).

(Rev. 2004) *All information subject to change without notice.*
6SE483 0401 Copyright © 2004 DETROIT DIESEL CORPORATION

2.37 EXHAUST GAS OXYGEN SENSOR FOR SERIES 60G ENGINES

The Exhaust Gas Oxygen Sensor is mounted in the vehicle exhaust pipe within 12 inches of the turbocharger exhaust outlet in the top half of the pipe. The sensor is threaded into an M18 boss welded to the exhaust pipe. The sensor works in conjunction with an oxygen sensor interface module that is mounted to a sensor bracket located at the rear of the cylinder block above the flywheel housing. See Figure 2-135 and see Figure 2-136.

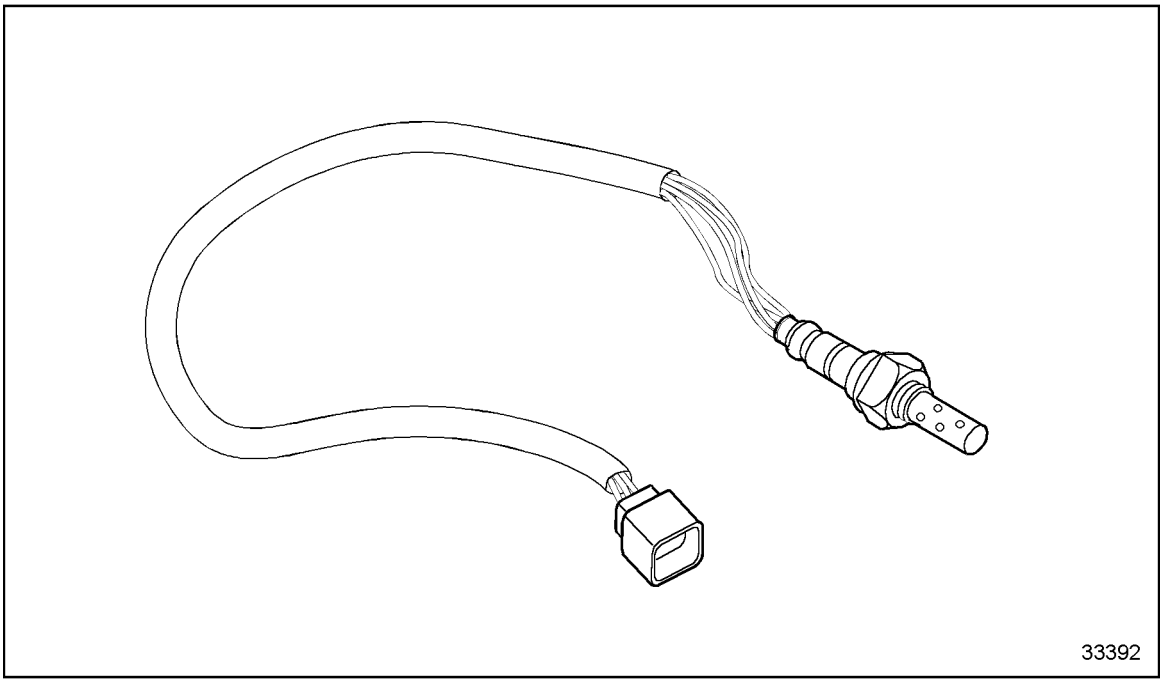

Figure 2-135 Exhaust Gas Oxygen Sensor

 Copyright © 2004 DETROIT DIESEL CORPORATION

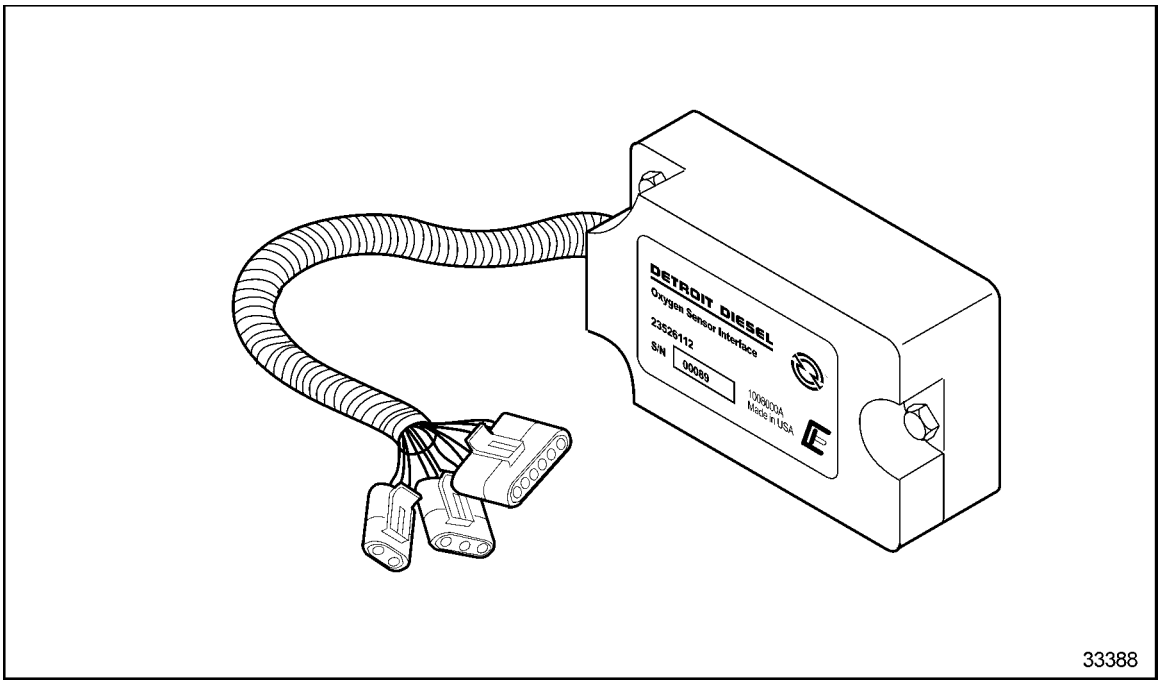

Figure 2-136 Oxygen Sensor Interface Module

The oxygen sensor and interface module provide a signal to DDEC which is proportional to the concentration of oxygen in the exhaust gas. DDEC calculates the air-fuel ratio from this signal and uses the data in controlling fuel delivery to the engine. The exhaust gas oxygen sensor is electrically connected to the interface module through the oxygen sensor wiring harness. The oxygen sensor interface module is electrically connected to DDEC and to battery power through the engine sensor harness. The oxygen sensor is a heated sensor. This allows the sensor to function at the optimum temperature range for accuracy. The interface module is a microprocessor that provides heater control, signal processing and diagnostic capabilities. The output from the oxygen sensor and interface module can be monitored using the Diagnostic Data Reader (DDR). The output is displayed as air fuel ratio in Lambda units. Lambda is the ratio of actual air fuel ratio to the stoichometric air-fuel ratio.

(Rev. 2004) *All information subject to change without notice.*
6SE483 0401 Copyright © 2004 DETROIT DIESEL CORPORATION

NOTICE:
Exposure to solvents or excessives amounts of oil or water can cause exhaust gas oxygen sensor failure. Exercise care when cleaning or performing repairs on air system, cylinder kit, valve train, turbocharger and exhaust system components. It may be necessary to replace the oxygen sensor with a plug and run engine without the sensor briefly to prevent exposure.

2.37.1 Replacement of the Exhaust Gas Oxygen Sensor and the Oxygen Sensor Interface Module

The exhaust gas oxygen sensor and the oxygen sensor interface module are not serviceable and must be replaced as an assembly. No adjustments are required.

2.37.2 Removal of the Exhaust gas Oxygen Sensor and the Oxygen Sensor Interface Module

Remove the exhaust gas oxygen sensor as follows:

1. Disengage the connector between the oxygen sensor wire harness and oxygen sensor wire pigtail.
2. Loosen and remove the oxygen sensor from the exhaust pipe.

Remove the oxygen sensor interface module as follows:

1. Disconnect oxygen sensor harness six–pin connector at interface module.
2. Disconnect three–pin engine sensor wire harness connector at interface module.
3. Disconnect two–pin engine sensor wire harness connector at interface module.
4. Remove three M6 bolts that attach the module to the sensor bracket.
5. Remove module from bracket.

 Copyright © 2004 DETROIT DIESEL CORPORATION

2.37.3 Installation of the Exhaust Gas Oxygen Sensor and the Oxygen Sensor Interface Module

Install the exhaust gas oxygen sensor as follows:

NOTICE:
Use of excessive amount of anti-seize compound or direct sensing element contact with compound can cause sensor poisoning and erroneous sensor readings or failure.

1. New sensors have antiseize compound pre-applied to the threads of the sensor. If reinstalling a used sensor, lightly apply antiseize compound to threads of sensor.
2. Install sensor in boss and torque to 40–50 N·m (29.5–36.9 lb·ft).
3. Connect oxygen sensor harness to sensor.
4. Turn on ignition and, with the Diagnostic Data Reader, clear the AFR (air fuel ratio) learn table.
5. Start engine and check for check engine or stop engine light.

Install the oxygen sensor interface module as follows:

1. Position module on sensor bracket and install three M6 attaching bolts.
2. Connect to three-pin and two-pin connectors in engine sensor wire harness.
3. Connect to six-pin connector in oxygen sensor wire harness.
4. Turn on ignition and, with the Diagnostic Data Reader, clear the AFR (air fuel ratio) learn table.
5. Start engine and check for check engine or stop engine light or read any diagnostic codes. If any code other than 25 is obtained, refer to the *Detroit Diesel Single ECM Troubleshooting Manual*(6SE497).

(Rev. 2004) *All information subject to change without notice.*
6SE483 0401 Copyright © 2004 DETROIT DIESEL CORPORATION

2.38 EXHAUST TEMPERATURE SENSOR FOR THE SERIES 60G ENGINES

The Exhaust Gas Temperature Sensor is threaded into the exhaust pipe within 12 inches of the turbocharger turbine outlet. The device is a temperature sensor that provides an electrical signal to the ECM. The sensor is electrically connected to the ECM through the engine sensor wiring harness. Temperature data from the sensor is used for engine protection and diagnostics.

2.38.1 Replacement of the Exhaust Gas Temperature Sensor

The Exhaust Gas Temperature Sensor is non-serviceable and must be replaced as an assembly. No adjustment is required.

2.38.2 Removal of the Exhaust Gas Temperature Sensor

Remove the exhaust gas temperature sensor as follows:

1. Disengage the connector from the engine sensor harness.
2. Loosen the nut and remove sensor from the exhaust pipe.

2.38.3 Installation of the Exhaust Gas Temperature Sensor

Install the exhaust gas temperature sensor as follows:

1. Insert in fitting in the exhaust pipe.
2. Tighten nut.
3. Connect sensor to engine sensor wire harness.
4. Turn the ignition to the ON position. Observe or read any diagnostic codes. If any codes other than 25 appears, refer to the *DDEC II/IV Troubleshooting Guide,* 6SE497.

 Copyright © 2004 DETROIT DIESEL CORPORATION

2.39 KNOCK SENSOR AND SIGNAL NOISE ENHANCEMENT FILTER MODULE

For knock protection, the Series 60 natural gas engines are equipped with a Knock Sensor and Signal Noise Enhancement Filter (SNEF) module. The knock sensor is located at the left rear of the cylinder head. The SNEF module is mounted on the left side of the cylinder block. The SNEF module receives electrical signals from the knock sensor and sends electrical signals to the ECM indicating knock level. The ECM uses this information to determine if the engine is knocking and adjusts ignition timing, air fuel ratio and throttle plate to protect the engine from excessive knock. See Figure 2-137.

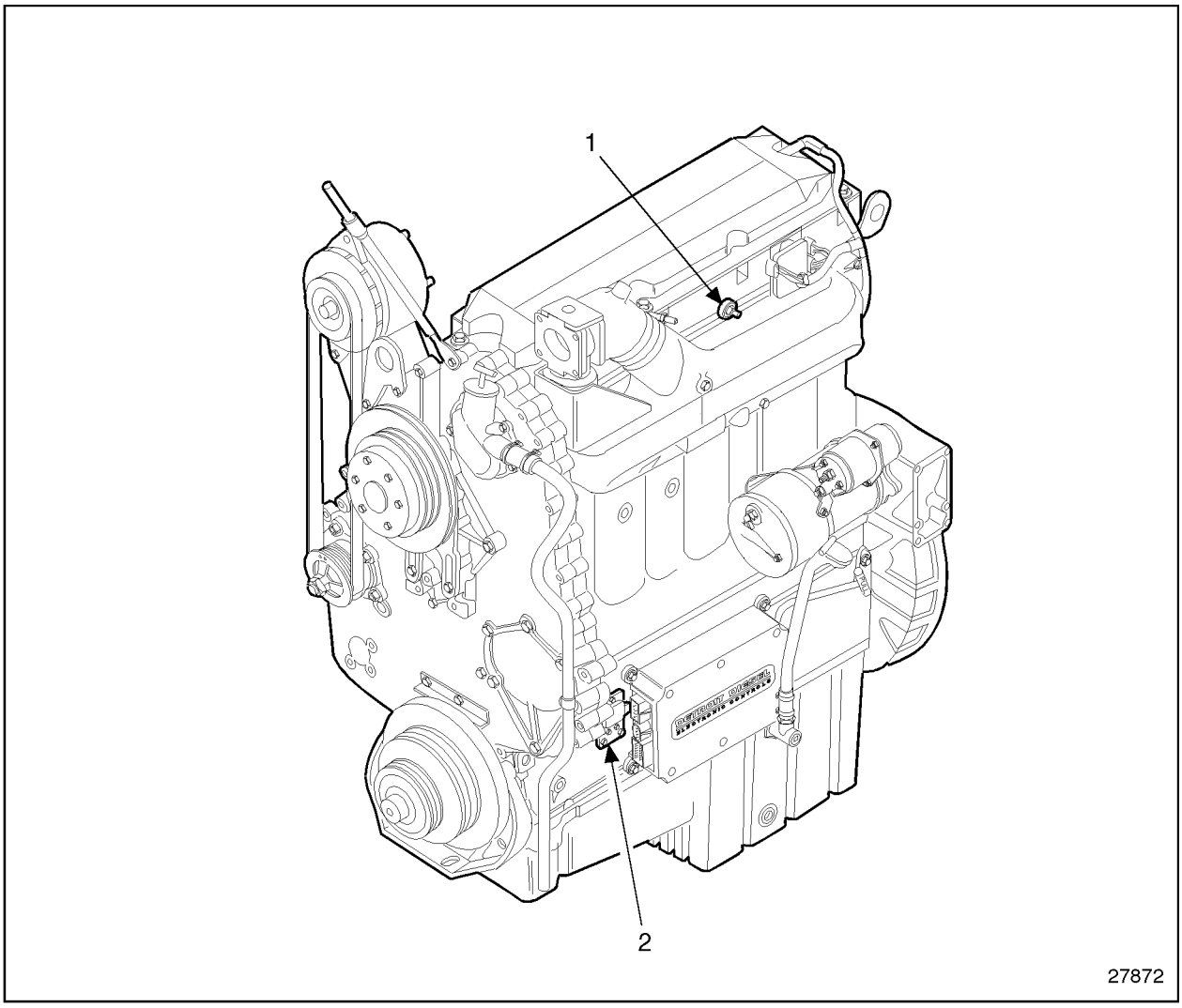

1. Knock Sensor
2. SNEF Module

Figure 2-137 Location of Knock Sensor and Signal Noise Enhancement Filter Module

(Rev. 2004) *All information subject to change without notice.*
6SE483 0401 Copyright © 2004 DETROIT DIESEL CORPORATION

Listed in Table 2-17are the knock sensor and knock interface module diagnostic codes:

Description	Voltage	SID	FMI	Information
Knock Control	HIGH	S76	3	Indicates that the knock sensor input to the ECM has exceeded 95% (normally >4.75 volts) of the sensor supply voltage. This diagnostic is typically detected when there is an open sensor return circuit or the sensor signal circuit is shorted to the sensor +5 volt supply.
Knock Control	LOW	S76	4	Indicates that the knock sensor input to the ECM has dropped below 5% (normal < 0.25 volts) of the sensor supply voltage. This diagnostic is typically detected when there is:- An open sensor signal circuit- An open sensor +5 volt supply circuit- The sensor signal is shorted to the sensor return circuit or to ground- The sensor +5 volt supply is shorted to sensor return circuit or to ground.
Knock Control	HIGH	S76	0	Indicates that the knock interface module has detected that the engine knock level has exceeded the first level of the recommended engine operational range.
Knock Control	MECHANICAL FAULT	S76	7	Indicates that the knock interface module has detected that the engine knock level has exceeded the second level of the recommended engine operational range.

Table 2-17 Knock Sensor Diagnostic Codes for the Series 60G Engine

 Copyright © 2004 DETROIT DIESEL CORPORATION

2.39.1 Replacement of Knock Sensor and Signal Noise Enhancement Filter Module

The knock sensor and SNEF module are non-serviceable and each should be replaced as a unit. No adjustment is required.

2.39.2 Removal of Knock Sensor and Signal Noise Enhancement Filter Module

Remove the knock sensor as follows:

1. Disengage the locking tang on the single wire connector. Grasp the body of the connector and gently pull it from the socket.
2. Use the appropriate wrench on the hex portion of the sensor and unscrew it from the fitting.

Remove the SNEF module as follows:

1. Disengage the locking tang on the wire connector. Grasp the body of the connector and gently pull it from the socket.
2. Remove the two bolts attaching the SNEF module to its mounting bracket.

2.39.3 Installation of Knock Sensor and Signal Noise Enhancement Filter Module

Install the knock sensor as follows:

1. Screw the sensor into the cylinder head. Torque to 16-22 N·m (12-16 lb·ft).
2. Engage locking tang.

Install the SNEF module as follows:

1. Install the SNEF module to its mounting bracket and attach with two mounting bolts.
2. Engage locking tang.

(Rev. 2004) *All information subject to change without notice.*
6SE483 0401 Copyright © 2004 DETROIT DIESEL CORPORATION

2.40 BAROMETRIC PRESSURE SENSOR FOR THE SERIES 60G ENGINE WITH HIGH PRESSURE FUEL SYSTEM

The Barometric Pressure Sensor (BARO sensor) is mounted to the sensor bracket at the rear of the cylinder block just above the flywheel housing. The sensor sends an electrical signal to the ECM indicating barometric pressure. It is electrically connected to the ECM through the engine sensor wire harness. A hose is attached to the inlet of the sensor to protect it form dirt and prevent plugging. The ECM uses the data in controlling fuel delivery to the engine. See Figure 2-138.

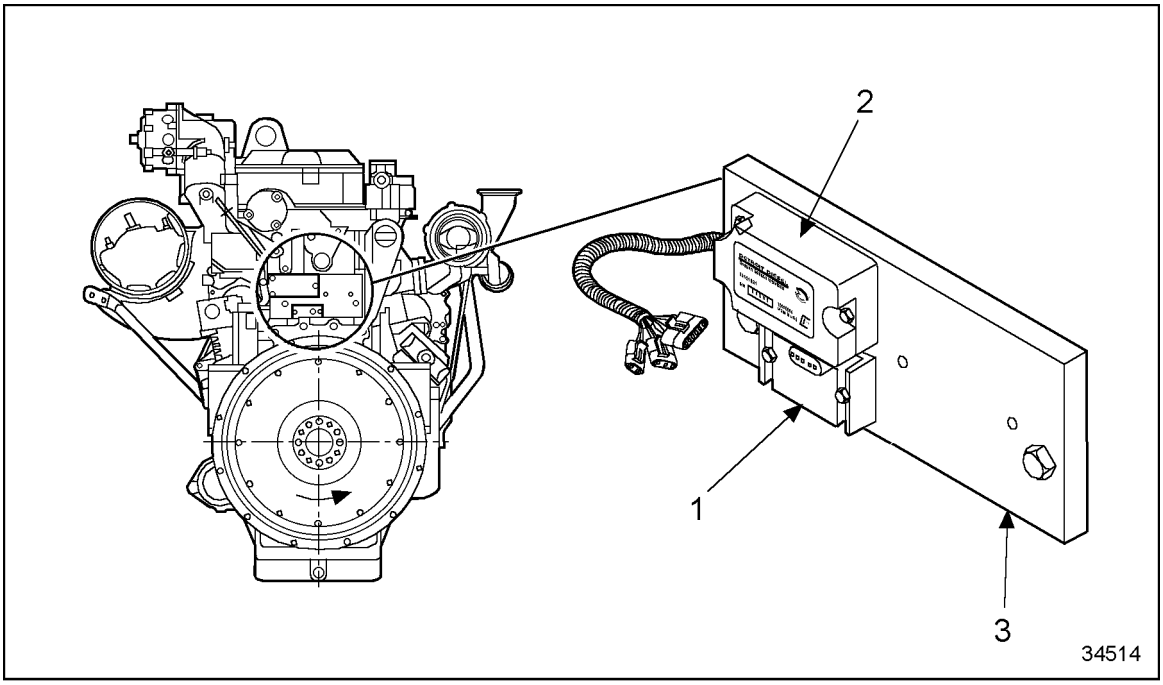

1. Barometric Pressure Sensor
2. Oxygen Sensor Interface Module
3. Sensor Bracket

Figure 2-138 Barometric Pressure Sensor for Series 60G Engines

 Copyright © 2004 DETROIT DIESEL CORPORATION

2.40.1 Replacement of the Barometric Pressure Sensor

The barometric pressure sensor is non-serviceable and must be replaced as an assembly.

2.40.2 Removal of the Barometric Pressure Sensor

Remove the Barometric Pressure Sensor as follows:

1. Disengage the locking tang on the BARO sensor.
2. Disconnect the hose from the inlet of the sensor.
3. Loosen two attaching bolts and remove sensor from bracket.

2.40.3 Installation of the Barometric Pressure Sensor

Install the BARO sensor as follows:

NOTICE:
Use care tightening sensor attaching bolts. Overtightening the bolts will damage the sensor.

1. Install the sensor on the bracket. Torque bolts to 2.7 N·m (24 lb·in.).
2. Connect the inlet hose.
3. Engage it to the sensor wire harness connector.
4. Turn ignition on and, with Diagnostic Data Reader, clear the AFR (air fuel ratio) learn table.
5. Turn ignition to the "ON" position. Observe or read any diagnostic codes. If any codes other than 25 appears, refer to the *DDEC II/IV Troubleshooting Guide,* 6SE497.

(Rev. 2004) *All information subject to change without notice.*
6SE483 0401 Copyright © 2004 DETROIT DIESEL CORPORATION

2.41 OVERVIEW OF HIGH PRESSURE FUEL SYSTEM FOR SERIES 60G ENGINES

For a schematic diagram of a typical CNG fuel system, see Figure 2-139.

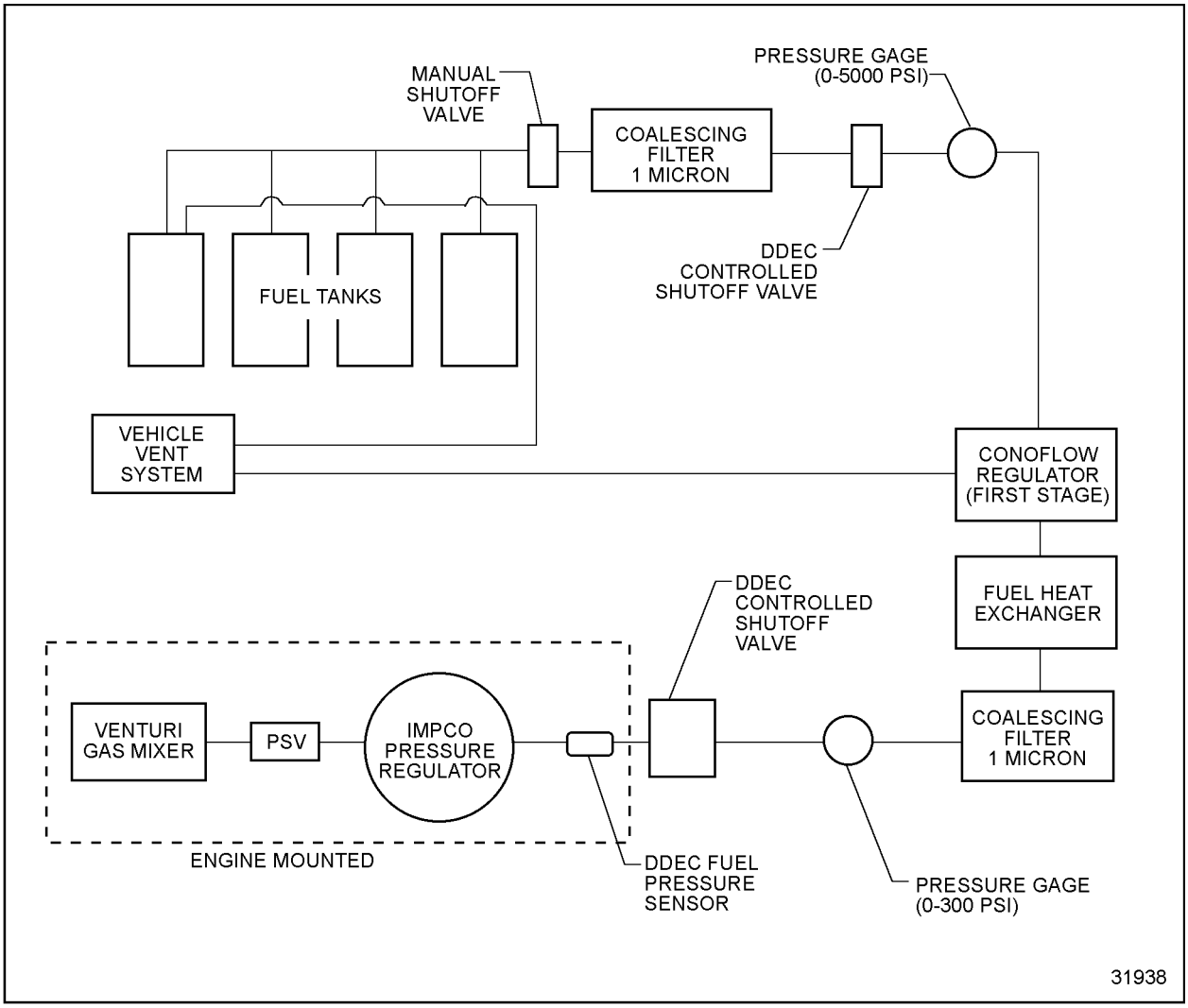

Figure 2-139 Schematic Diagram of Typical CNG Fuel System for 1998 and Later Series 60G Engines

NOTE:
The maximum distance between the second DDEC solenoid and the IMPCO regulator is 18 inches.

 Copyright © 2004 DETROIT DIESEL CORPORATION

The fuel system includes the following components:

DDC supplied:

- ☐ Venturi Type Gas Mixer
- ☐ PSV (Pulse width modulated Stepper motor Valve)
- ☐ IMPCO Low Pressure Regulator
- ☐ ITT Conoflow High Pressure Regulator
- ☐ Low Pressure DDEC Controlled Gas Shutoff Valve

OEM supplied:

- ☐ Fuel Tanks
- ☐ Fuel Lines
- ☐ Manual Shutoff Valves
- ☐ Coalesing Fuel Filters
- ☐ High Pressure DDEC Controlled Gas Shutoff Valve
- ☐ Pressure Gages
- ☐ Fuel Heat Exchanger

(Rev. 2004) *All information subject to change without notice.*
6SE483 0401 Copyright © 2004 DETROIT DIESEL CORPORATION

See Figure 2-140 for a component overview of the High Pressure fuel system.

The fuel system is designed to accurately deliver clean fuel at the correct air fuel mixture to the combustion chamber at any engine operating condition.

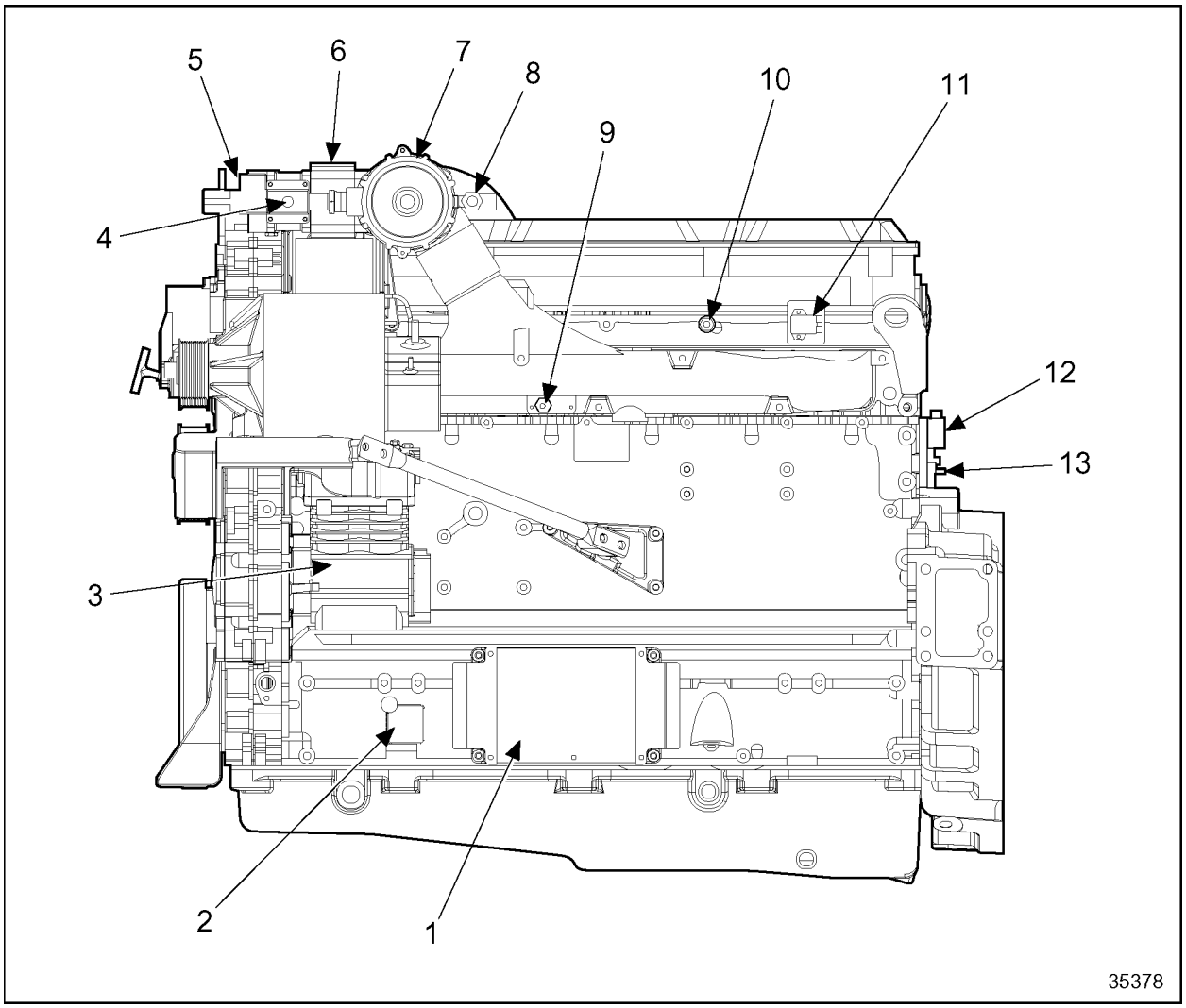

1. Electronic Control Module
2. SNEF Module
3. Air Compressor
4. Fuel Temperature Sensor
5. PSV
6. Throttle Actuator
7. IMPCO Regulator
8. Fuel Pressure Sensor, Fuel Inlet
9. Manifold Air Pressure Sensor
10. Knock Sensor and Stud
11. Ignitor Module
12. Oxygen Sensor Interface Module
13. Barometric Air Pressure Sensor

Figure 2-140 Series 60G Engine Component Location

 Copyright © 2004 DETROIT DIESEL CORPORATION

CAUTION:

To avoid injury from an explosion of natural gas, the following precautions must be taken:

- ☐ **Do not smoke when installing or servicing the engine or fuel system.**
- ☐ **Installation or servicing of natural-gas equipment must only be conducted in well-ventilated, natural gas compatible areas. Do not install or service equipment in an enclosed area where ignition sources are present without first ensuring that an undetected gas leak may be safely vented without being ignited.**
- ☐ **Bleed natural gas lines before installing or servicing any component connected to the fuel lines.**
- ☐ **Natural gas fuel systems are pressurized. Relieve pressure from any fuel system component prior to installation or service of that component.**
- ☐ **Use a combustible-gas detector. Liquefied natural gas (LNG) is odorless and cannot be detected by smell. Compressed Natural gas (CNG) may be odorless and may not be detected by smell.**
- ☐ **Equipment fuel systems are the responsibility of the Original Equipment Manufacturer (OEM). Equipment fuel system guidelines must be closely adhered to when installing or servicing equipment. Refer to OEM guidelines specifying which maintenance procedures require venting of fuel lines and fuel tanks.**
- ☐ **LNG systems are pressurized and contain extremely cold (-260°F [-162°C]) fluids. Contact the fuel supplier or OEM for LNG safety requirements. Contact with LNG may cause personal injury (freezing).**
- ☐ **Vent systems on the equipment should be ducted to a safe area whenever equipment is in an enclosed area.**

Natural gas is highly flammable and explosive and may be extremely cold (-260°F [-162°C]).

CAUTION:

To avoid injury from the explosion of natural gas, the engine must be kept in a well-ventilated area away from open flames, sparks, and electrical resistance (heating) coils.

(Rev. 2004) *All information subject to change without notice.*
6SE483 0401 Copyright © 2004 DETROIT DIESEL CORPORATION

Fuel is stored in the fuel tanks at a pressure as high as 3600 PSI. The fuel passes through high pressure fuel shutoff valves, typically controlled by both DDEC and OEM systems, through primary fuel filters to the high pressure regulator. The pressure is reduced by the high pressure regulator to approximately 110 PSI. Flow continues through the secondary fuel filter, through the DDEC controlled low pressure fuel shutoff valve on to the low pressure regulator. The low pressure regulator is balanced to the air system at the inlet to the fuel mixer assembly. It maintains outlet fuel pressure slightly higher than turbo boost pressure at the mixer inlet. Fuel from the regulator passes through the PSV, enters the venturi mixer and is mixed with incoming air.

Air flow through the venturi creates a pressure drop at the throat of the venturi that increases and decreases in proportion to air flow. This pressure differential is used to draw fuel through the venturi insert, the PSV and low pressure regulator. The system is sometimes referred to as a demand system. Increases in pressure drop across the venturi increase the demand for fuel flow required to maintain the fuel outlet pressure at the low pressure regulator.

 Copyright © 2004 DETROIT DIESEL CORPORATION

Fine control of fuel flow is achieved by positioning of the gas valve. Changes in gas valve position change the flow restriction between the venturi and low pressure regulator. For a given set of engine speed and load conditions, reducing the valve opening increases restriction resulting in reduced fuel flow and a leaner air fuel mixture. Likewise, increasing the valve opening reduces restriction resulting in increased fuel flow and a richer air fuel mixture.

In part, fuel flow is controlled by calibration and matching of the key fuel system components, the venturi mixer, the PSV (gas valve position) and the low pressure regulator. Electronics are used to further refine control. Electric control is provided by DDEC. The DDEC output which allows control of fuel delivery is the gas valve position. Input to DDEC for fuel delivery control is provided by engine speed, inlet manifold pressure, inlet manifold temperature, fuel temperature, coolant temperature, throttle position and exhaust gas oxygen sensors.

In addition exhaust gas temperature, fuel pressure and knock sensors provide engine protection and diagnostics capabilities unique to the Series 60 natural gas engine. The system is a closed loop system. This refers to the fact that input or feedback from the exhaust gas oxygen sensor is used to make adjustments in fuel delivery. The system is constantly making use of this feedback to adjust air fuel ratio to the desired value.

Electronic control of the fuel system provides the capability to adjust and correct for changes in operating condition, environmental condition, changes in fuel quality, and differences in components and component changes that occur over time. For fuel quality specifications refer to section 5.1. Refer to section 2.19 for details on the DDEC system for Series 60 Natural Gas engines.

(Rev. 2004) *All information subject to change without notice.*
6SE483 0401 Copyright © 2004 DETROIT DIESEL CORPORATION

2.42 FUEL PRESSURE GAGES FOR THE SERIES 60G ENGINE WITH A HIGH PRESSURE FUEL SYSTEM

Fuel pressure gages should be installed on both high and low pressure sides of fuel system. The high pressure gage should have a range of 0 - 4000 PSI mounted between the tank and 1st stage regulator. The low pressure gage should have a range of 0 - 200 PSI.

2.42.1 Replacement of Fuel Pressure Gages for the Series 60G Engine

Detroit Diesel does not service the fuel pressure gages. Refer to OEM to replace as necessary.

2.42.2 Removal of Fuel Pressure Gages for the Series 60G Engine

Prior to removal or replacement of fuel system pressure gages, the fuel system must be vented. Refer to section 2.43.1 and refer to section 2.43.2.

CAUTION:

To avoid injury from the explosion of natural gas, the engine must be kept in a well-ventilated area away from open flames, sparks, and electrical resistance (heating) coils.

Refer to OEM for removal procedure for the fuel pressure gages.

2.42.2.1 Inspection of Fuel Pressure Gages for the Series 60G Engine

Refer to OEM for inspection procedure for the fuel pressure gages.

2.42.3 Installation of Fuel Pressure Gages for the Series 60G Engine

Refer to OEM for installation procedure for the fuel pressure gages.

 Copyright © 2004 DETROIT DIESEL CORPORATION

CAUTION:

To avoid injury from an explosion of natural gas, the following precautions must be taken:

- **Do not smoke when installing or servicing the engine or fuel system.**
- **Installation or servicing of natural-gas equipment must only be conducted in well-ventilated, natural gas compatible areas. Do not install or service equipment in an enclosed area where ignition sources are present without first ensuring that an undetected gas leak may be safely vented without being ignited.**
- **Bleed natural gas lines before installing or servicing any component connected to the fuel lines.**
- **Natural gas fuel systems are pressurized. Relieve pressure from any fuel system component prior to installation or service of that component.**
- **Use a combustible-gas detector. Liquefied natural gas (LNG) is odorless and cannot be detected by smell. Compressed Natural gas (CNG) may be odorless and may not be detected by smell.**
- **Equipment fuel systems are the responsibility of the Original Equipment Manufacturer (OEM). Equipment fuel system guidelines must be closely adhered to when installing or servicing equipment. Refer to OEM guidelines specifying which maintenance procedures require venting of fuel lines and fuel tanks.**
- **LNG systems are pressurized and contain extremely cold (-260°F [-162°C]) fluids. Contact the fuel supplier or OEM for LNG safety requirements. Contact with LNG may cause personal injury (freezing).**
- **Vent systems on the equipment should be ducted to a safe area whenever equipment is in an enclosed area.**

Natural gas is highly flammable and explosive and may be extremely cold (-260°F [-162°C]).

Refer to section 2.43.3 for leak checking procedure.

(Rev. 2004) *All information subject to change without notice.*
6SE483 0401 Copyright © 2004 DETROIT DIESEL CORPORATION

2.43 VENTING AND LEAK CHECKING PROCEDURES FOR A NATURAL GAS ENGINE (HIGH PRESSURE SYSTEM)

To vent and leak check an operable engine, refer to section 2.43.1.

2.43.1 Venting an Operable Engine to Relieve Natural Gas Pressure

Vent an operable engine as follows:

CAUTION:

To avoid injury from the explosion of natural gas, the engine must be kept in a well-ventilated area away from open flames, sparks, and electrical resistance (heating) coils.

1. Shut off manual valves on natural gas supply tanks and main shutoff valve on natural gas fuel supply line.
2. Start engine and run until it stalls due to fuel starvation.
3. Check to ensure gage pressure at point on the natural gas fuel line to be vented has been reduced to zero. If not, repeat step 1. Then repeat step 2.
4. Disconnect the vehicle batteries using switch(s) in the battery compartment or by disconnecting battery ground cable.
5. Slightly loosen the CNG fuel line fitting to be serviced in a well-ventilated area to allow any remaining gas to vent.
6. Completely open the fitting that was slightly opened and allow to vent in a well-ventilated area.

 Copyright © 2004 DETROIT DIESEL CORPORATION

2.43.2 Venting an Inoperable Engine to Relieve Natural Gas Pressure

If the engine *cannot run*, use the following venting procedure to relieve the natural gas pressure downstream of the shutoff valve:

CAUTION:

To avoid injury from the explosion of natural gas, the engine must be kept in a well-ventilated area away from open flames, sparks, and electrical resistance (heating) coils.

1. Shut off manual valves on natural gas supply tanks and main shutoff valve on natural gas fuel supply line.
2. Disconnect the vehicle batteries using switch(s) in the battery compartment or by disconnecting the battery ground cable.
3. Open a fitting to assure all pressure has been relieved in the natural gas vehicle fuel line.
4. Check all connections that were loosened for leaks after installation, service and troubleshooting are complete.

(Rev. 2004) *All information subject to change without notice.*
6SE483 0401 Copyright © 2004 DETROIT DIESEL CORPORATION

2.43.3 Leak Checking the Natural Gas Fuel System

Use the following steps to check for leaks:

CAUTION:

To avoid injury from an explosion of natural gas, the following precautions must be taken:

- ☐ **Do not smoke when installing or servicing the engine or fuel system.**
- ☐ **Installation or servicing of natural-gas equipment must only be conducted in well-ventilated, natural gas compatible areas. Do not install or service equipment in an enclosed area where ignition sources are present without first ensuring that an undetected gas leak may be safely vented without being ignited.**
- ☐ **Bleed natural gas lines before installing or servicing any component connected to the fuel lines.**
- ☐ **Natural gas fuel systems are pressurized. Relieve pressure from any fuel system component prior to installation or service of that component.**
- ☐ **Use a combustible-gas detector. Liquefied natural gas (LNG) is odorless and cannot be detected by smell. Compressed Natural gas (CNG) may be odorless and may not be detected by smell.**
- ☐ **Equipment fuel systems are the responsibility of the Original Equipment Manufacturer (OEM). Equipment fuel system guidelines must be closely adhered to when installing or servicing equipment. Refer to OEM guidelines specifying which maintenance procedures require venting of fuel lines and fuel tanks.**
- ☐ **LNG systems are pressurized and contain extremely cold (-260°F [-162°C]) fluids. Contact the fuel supplier or OEM for LNG safety requirements. Contact with LNG may cause personal injury (freezing).**
- ☐ **Vent systems on the equipment should be ducted to a safe area whenever equipment is in an enclosed area.**

Natural gas is highly flammable and explosive and may be extremely cold (-260°F [-162°C]).

1. Spray soapy water or commercially available leak checking solutions on connections which are pressurized to working pressure. Bubbles will form if there is a leak.

 Copyright © 2004 DETROIT DIESEL CORPORATION

2. Repair any leak by:

   [a] Tightening connection using the fitting technique of the manufacturer.

NOTE:
Bleed the fuel lines before replacing leaking components using the procedure in this section. This will prevent a discharge of gas.

   [b] Replacing leaking component.

   [c] Replace the pipe threaded connector with a new one if the leak is a pipe thread connection. Use anaerobic sealant with Teflon (such as SWAK®) applied to the threads. *SWAK® is a registered trademark of The Cajon Company.*

3. Re-check connection with procedure in step1.
4. Use a combustible gas detector to check for presence of natural gas. If natural gas is detected, continue looking for leaks until the locations of all the leaks are determined.
5. Repair the leak using the procedure in step 2.

(Rev. 2004) *All information subject to change without notice.*
6SE483 0401 Copyright © 2004 DETROIT DIESEL CORPORATION

2.44 HIGH PRESSURE FUEL REGULATOR FOR THE SERIES 60G ENGINE

The Conoflow high pressure fuel regulator is typically mounted in the engine compartment of the vehicle. The function of the regulator is to supply fuel flow based on engine demand at a reduced pressure. The regulator reduced the pressure from the tank pressure, which can be as high as 3600 PSI, to approximately 110 PSI. The regulator is heated with coolant supplied from the cylinder head and returned to the water pump inlet. The regulator includes a pressure relief device to protect downstream components. The pressure relief valve is set to open at approximately 300 PSI. The pressure relief is connected to the vehicle gas vent system. The gas inlet connection to the regulator is a female SAE No. 6 O-ring connection. The gas outlet is a female SAE No. 8 O-ring connection. The pressure relief is a male 1/4 NTPF connection. Coolant supply and return connections are 1/4 inch NPTF female pipe thread holes. See Figure 2-141.

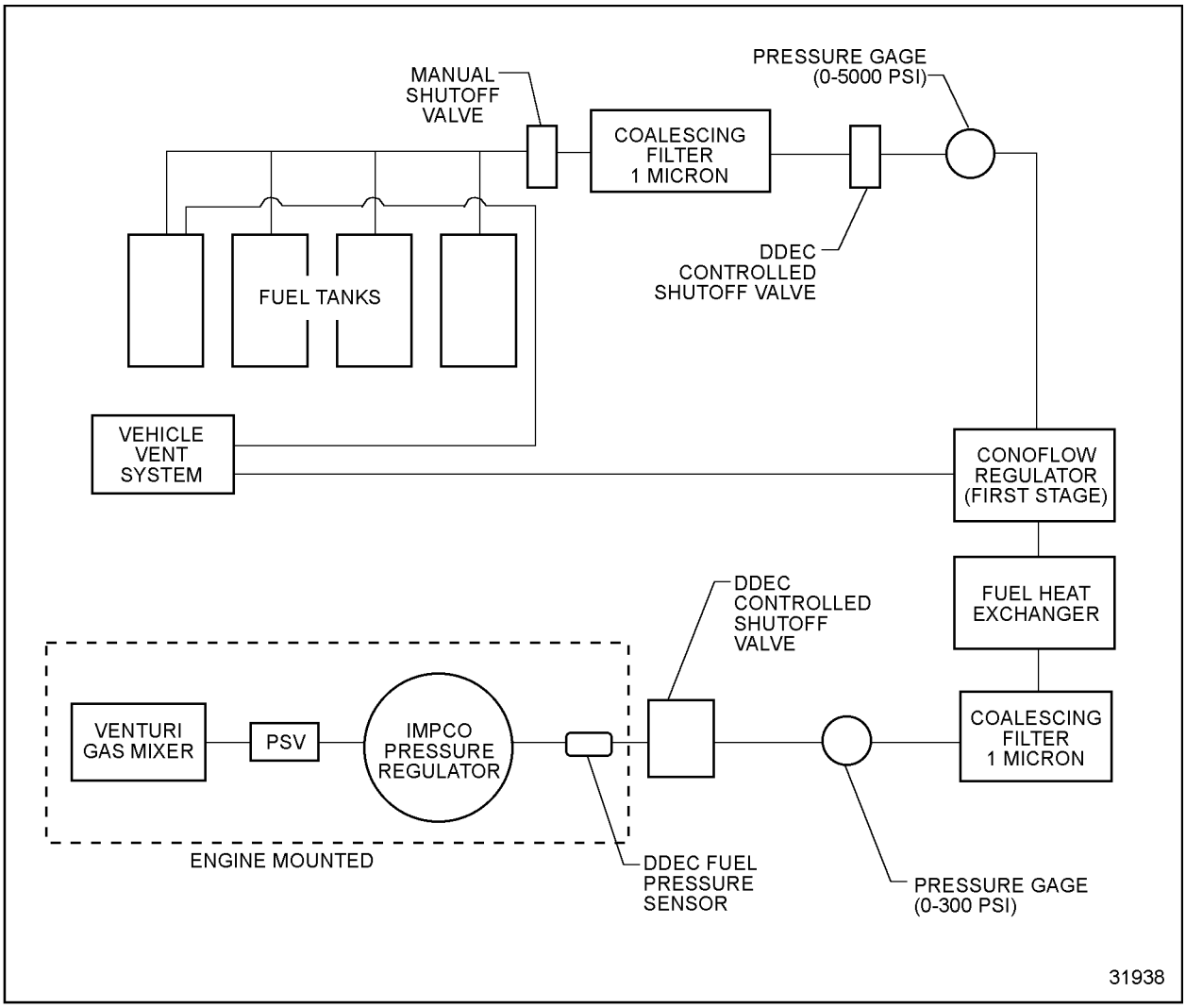

Figure 2-141 High Pressure Fuel Regulator for Series 60G Engines

 Copyright © 2004 DETROIT DIESEL CORPORATION

2.44.1 Replacement of the High Pressure Regulator for the Series 60G Engine

The high pressure fuel regulator is not serviceable and should be replaced as a unit. No adjustment is required.

2.44.2 Removal of the High Pressure Regulator for the Series 60G Engine

Remove the high pressure fuel regulator as follows:

1. Vent fuel system, refer to section 2.52.
2. Disconnect fuel supply pipe at regulator inlet.
3. Disconnect fuel pipe from regulator outlet.
4. Drain coolant.
5. Disconnect coolant supply and return hoses at regulator.
6. Disconnect vent pipe at regulator.
7. Remove two M8 bolts attaching the regulator to its mounting bracket.
8. Remove regulator from bracket and remove fittings for reuse.

2.44.3 Installation of the High Pressure Regulator for the Series 60G Engine

Install the high pressure fuel regulator as follows:

1. Install gas inlet and outlet O-ring fittings.
2. Position regulator on mounting bracket.
3. Install two M8 mounting bolts.
4. Connect fuel outlet pipe.
5. Connect fuel supply pipe.
6. Connect coolant supply and return hoses.
7. Refill with coolant.
8. Connect vent pipe.
9. Open fuel shutoff valves and crank engine to supply fuel to regulator.
10. Check for leaks, refer to section 2.51.

(Rev. 2004) *All information subject to change without notice.*
6SE483 0401 Copyright © 2004 DETROIT DIESEL CORPORATION

2.45 PULSE WIDTH MODULATED STEPPER MOTOR VALVE (PSV) FOR SERIES 60G AUTOMOTIVE ENGINES

A pulse width modulated stepper motor valve (PSV) is used to bias gas flow to the venturi mixer as a means of air fuel ratio control. The PSV is connected to the low pressure regulator through a special connector tube with two O-rings that seal against the inside diameter of the gas inlet port in the PSV. It is mounted to the mixer housing with four attaching bolts and uses an O-ring to seal the mounting flange. Gas flows through the PSV housing.

The gas outlet passage in the PSV is intersected by a bore in which a piston operates. Gas flow is controlled by precise positioning of the piston and the amount that the piston protrudes into the gas outlet passage. Greater protrusion into the gas passage increases restriction and results in reduced gas flow and a leaner air fuel ratio. Similarly, less protrusion reduces restriction resulting in higher gas flow and a richer are fuel mixture.

 Copyright © 2004 DETROIT DIESEL CORPORATION

The piston is driven by a stepper motor which positions the piston based on a (PWM) position command signal from DDEC. The PSV is electrically connected to the ECM and 12–volt battery power through a seven—pin connector that mates to the engine sensor harness. The PSV supplies a "gas valve position" analog signal to DDEC which can be monitored using the diagnostic data reader (DDR). The signal indicates valve opening position and is scaled from 0 to 100 percent. A diagnostic signal is supplied to DDEC for loss of command signal, piston obstruction or valve electronics failure. See Figure 2-142.

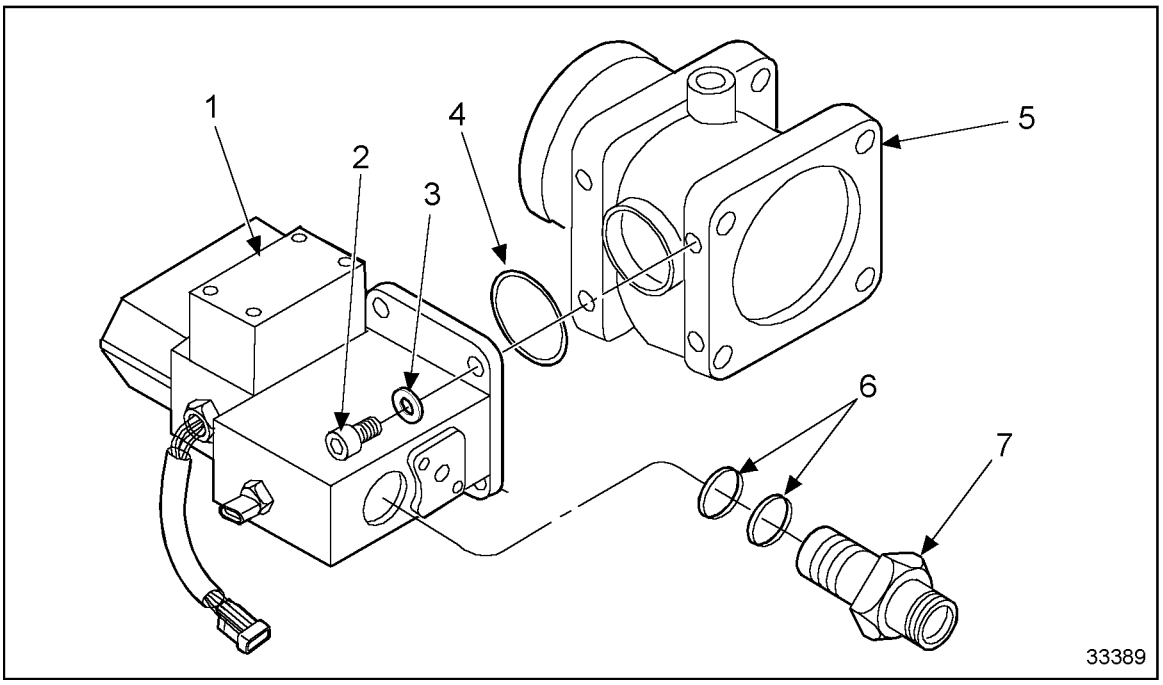

1. PSV
2. Bolt
3. Washer
4. PSV O-ring
5. Mixer
6. Connector O-rings
7. Connector Tube

Figure 2-142 Series 60G Automotive PSV 1998 and Later Engines

(Rev. 2004) *All information subject to change without notice.*
6SE483 0401 Copyright © 2004 DETROIT DIESEL CORPORATION

2.45.1 Replacement of Pulse Width Modulated Stepper Motor Valve for the Series 60G Engine

The PSV is non-serviceable and should be replaced as a unit. No adjustment is required.

2.45.2 Removal of Pulse Width Modulated Stepper Motor Valve for the Series 60G Engine

Remove the PSV as follows:

CAUTION:

To avoid injury from the explosion of natural gas, the engine must be kept in a well-ventilated area away from open flames, sparks, and electrical resistance (heating) coils.

1. Vent fuel system; refer to section 2.52.
2. Disconnect the seven-wire connector from the engine sensor wiring harness.
3. Remove the four bolts connecting the PSV to the fuel mixer.
4. Slide the PSV forward to separate from the connecting tube.

2.45.3 Installation of Pulse Width Modulated Stepper Motor Valve for the Series 60G Engine

Install the PSV as follows:

1. Lubricate connector O-rings and PSV O-ring.
2. Loosen bolts attaching fuel mixer to throttle.

NOTE:
The bolt holes in the throttle are slotted to allow adjustment to align the PSV with the connector tube in the low pressure regulator.

3. Position PSV against the mixer with O-ring in place and align gas inlet port with connector. Slide rearward to engage connector until bolts holes are aligned.
4. Secure PSV to the fuel mixer with four bolts and torque to 20 N·m (15 lb·ft).
5. Tighten fuel mixer to throttle attaching bolts.

 Copyright © 2004 DETROIT DIESEL CORPORATION

CAUTION:

To avoid injury from an explosion of natural gas, the following precautions must be taken:

- **Do not smoke when installing or servicing the engine or fuel system.**
- **Installation or servicing of natural-gas equipment must only be conducted in well-ventilated, natural gas compatible areas. Do not install or service equipment in an enclosed area where ignition sources are present without first ensuring that an undetected gas leak may be safely vented without being ignited.**
- **Bleed natural gas lines before installing or servicing any component connected to the fuel lines.**
- **Natural gas fuel systems are pressurized. Relieve pressure from any fuel system component prior to installation or service of that component.**
- **Use a combustible-gas detector. Liquefied natural gas (LNG) is odorless and cannot be detected by smell. Compressed Natural gas (CNG) may be odorless and may not be detected by smell.**
- **Equipment fuel systems are the responsibility of the Original Equipment Manufacturer (OEM). Equipment fuel system guidelines must be closely adhered to when installing or servicing equipment. Refer to OEM guidelines specifying which maintenance procedures require venting of fuel lines and fuel tanks.**
- **LNG systems are pressurized and contain extremely cold (-260°F [-162°C]) fluids. Contact the fuel supplier or OEM for LNG safety requirements. Contact with LNG may cause personal injury (freezing).**
- **Vent systems on the equipment should be ducted to a safe area whenever equipment is in an enclosed area.**

Natural gas is highly flammable and explosive and may be extremely cold (-260°F [-162°C]).

6. Clear AFR learn table using the Diagnostic Data Reader (DDR).
7. Check for diagnostic codes using DDR.
8. Check for leaks, refer to section 2.52.

(Rev. 2004) *All information subject to change without notice.*
6SE483 0401 Copyright © 2004 DETROIT DIESEL CORPORATION

2.46 FUEL MIXER FOR THE SERIES 60G HIGH PRESSURE FUEL SYSTEM

The venturi fuel mixer assembly consists of a die cast aluminum body with a spun aluminum venturi permanently inserted into it. The unit has no moving parts. The mixer assembly is attached to the throttle located at the left front of the engine. See Figure 2-143.

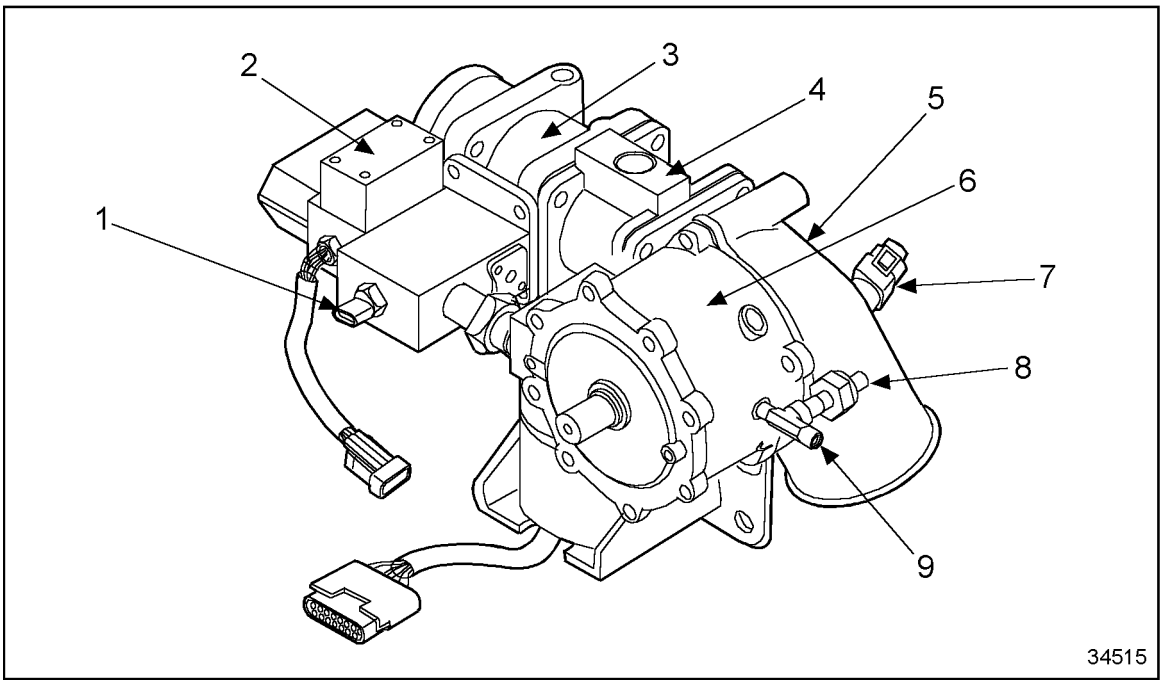

1. Fuel Temperature Sensor
2. PSV
3. Fuel Mixer
4. Throttle
5. Air Inlet Elbow
6. Low Pressure Regulator
7. Air Temperature Sensor
8. Fuel Pressure Sensor
9. Fuel Inlet Tee-Fitting

Figure 2-143 Fuel Mixer for the Series 60G Engine

 Copyright © 2004 DETROIT DIESEL CORPORATION

2.46.1 Replacement of Fuel Mixer for the Series 60G Engine High Pressure Fuel System

The fuel mixer is non-serviceable and should be replaced as a unit. No adjustment is required.

2.46.2 Removal of Fuel Mixer for the Series 60G Engine High Pressure Fuel System

Remove the fuel mixer as follows:

CAUTION:

To avoid injury from the explosion of natural gas, the engine must be kept in a well-ventilated area away from open flames, sparks, and electrical resistance (heating) coils.

1. Vent fuel system; refer to section 2.52.1and refer to section 2.52.2.
2. Disconnect hose between mixer and charge cooler outlet tube.
3. Disconnect and remove the PSV from the fuel mixer, refer to section 2.45.2.
4. Disconnect air balance hose at mixer.
5. Remove four fuel mixer mounting bolts.
6. Separate and remove the fuel mixer from the throttle.

2.46.3 Installation of Fuel Mixer for the Series 60G Engine High Pressure Fuel System

Install the fuel mixer as follows:

1. Clean gasket surface and install a new gasket.
2. Secure the fuel mixer to the throttle with four bolts finger-tight.
3. Install the PSV to the fuel mixer, refer to section 2.45.3.
4. Connect air balance hose to PSV and mixer.
5. Torque mixer bolts to 20 N·m (15 lb·ft).
6. Connect hose between mixer and charge cooler outlet tube.

(Rev. 2004) *All information subject to change without notice.*
6SE483 0401 Copyright © 2004 DETROIT DIESEL CORPORATION

⚠ CAUTION:

To avoid injury from an explosion of natural gas, the following precautions must be taken:

- ☐ **Do not smoke when installing or servicing the engine or fuel system.**
- ☐ **Installation or servicing of natural-gas equipment must only be conducted in well-ventilated, natural gas compatible areas. Do not install or service equipment in an enclosed area where ignition sources are present without first ensuring that an undetected gas leak may be safely vented without being ignited.**
- ☐ **Bleed natural gas lines before installing or servicing any component connected to the fuel lines.**
- ☐ **Natural gas fuel systems are pressurized. Relieve pressure from any fuel system component prior to installation or service of that component.**
- ☐ **Use a combustible-gas detector. Liquefied natural gas (LNG) is odorless and cannot be detected by smell. Compressed Natural gas (CNG) may be odorless and may not be detected by smell.**
- ☐ **Equipment fuel systems are the responsibility of the Original Equipment Manufacturer (OEM). Equipment fuel system guidelines must be closely adhered to when installing or servicing equipment. Refer to OEM guidelines specifying which maintenance procedures require venting of fuel lines and fuel tanks.**
- ☐ **LNG systems are pressurized and contain extremely cold (-260°F [-162°C]) fluids. Contact the fuel supplier or OEM for LNG safety requirements. Contact with LNG may cause personal injury (freezing).**
- ☐ **Vent systems on the equipment should be ducted to a safe area whenever equipment is in an enclosed area.**

Natural gas is highly flammable and explosive and may be extremely cold (-260°F [-162°C]).

7. Perform a leak check procedure. Refer to section 2.52.3.

 Copyright © 2004 DETROIT DIESEL CORPORATION

2.47 FUEL SHUTOFF VALVE FOR SERIES 60G ENGINE WITH HIGH PRESSURE FUEL SYSTEM

The fuel shutoff valve is typically mounted in the engine compartment close to the low pressure fuel regulator. The function of the valve is to shutoff fuel at the inlet to the regulator. The valve is powered by an electric solenoid. The valve is normally closed and is available with either 12–volt or 24–volt solenoids.

Electrical power to the solenoid is controlled by both DDEC and vehicle electrical systems. The DDEC ECM supplies a signal to open the valve when ignition is on and engine speed is above 60 rpm. The valve is closed when ignition is switched off, or when engine speed falls below 60 rpm or when an engine protection shutdown occurs. Vehicle systems typically tie power to the valve with the ignition switch and other safety systems such as fire suppression or methane (gas leakage) detection systems. The solenoid power is supplied through the vehicle wire harness. The gas inlet and outlet are female 1/2–inch NPTF connections. The shutoff valve comes with a mounting bracket attached. See Figure 2-144.

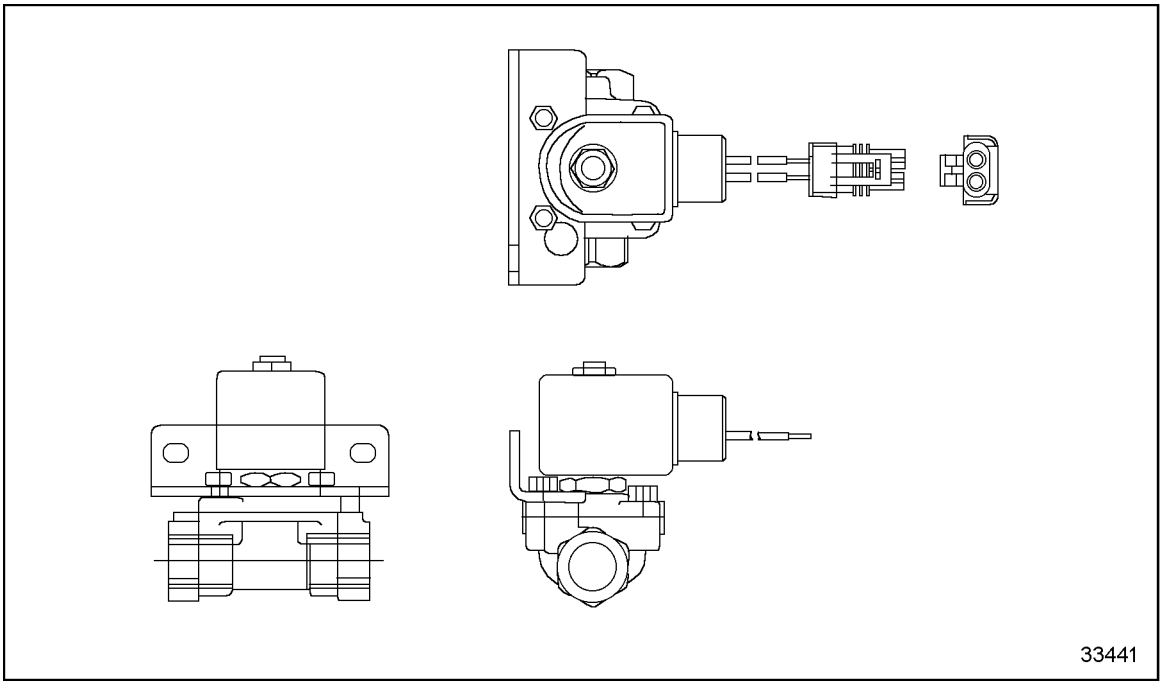

Figure 2-144 Fuel Shutoff Valve for Series 60G Engine

(Rev. 2004) *All information subject to change without notice.*
6SE483 0401 Copyright © 2004 DETROIT DIESEL CORPORATION

2.47.1 Replacement of the Fuel Shutoff Valve for the Series 60G Engine

The fuel shutoff valve is not serviceable and should be replaced as a unit. No adjustment is required.

2.47.2 Removal of the Fuel Shutoff Valve for the Series 60G Engine

Remove the fuel shutoff valve as follows:

1. Vent fuel system, refer to section 2.52.
2. Disconnect fuel supply pipe at shutoff inlet.
3. Disconnect fuel pipe from shutoff outlet.
4. Disconnect electrical connector.
5. Remove two bolts attaching the shutoff valve bracket to its mounting bracket and remove shutoff valve and bracket assembly.

2.47.3 Installation of the Fuel Shutoff Valve for the Series 60G Engine

Install the fuel shutoff valve as follows:

1. Install gas inlet and outlet fittings.
2. Position shutoff valve on mounting bracket.
3. Install mounting bolts.
4. Connect fuel outlet hose to outlet fitting.
5. Connect fuel supply pipe to inlet fitting.
6. Connect solenoid electrical connector to connector in vehicle wire harness.
7. Open manual fuel shutoff valves and crank engine to supply fuel.
8. Check for leaks, refer to section 2.52.3.

 Copyright © 2004 DETROIT DIESEL CORPORATION

2.48 IMPCO LOW PRESSURE FUEL REGULATOR FOR THE SERIES 60G ENGINE HIGH PRESSURE FUEL SYSTEM

The IMPCO® low pressure regulator is mounted to the air inlet elbow at the front left side of the engine. The gas inlet connection is a 1/4–in. NPTF pipe thread and is connected through a special natural gas compatible No. 8 hose to the low pressure DDEC controlled fuel shutoff valve. The gas outlet connection is a one—inch NPTF pipe thread and is mated to the inlet of the PSV through a special tube connector. The regulator is heated by engine coolant. The regulator outlet fuel pressure is balanced to turbo boost pressure at the mixer inlet. This pressure is communicated to the regulator through a No. 8 hose that connects to a 1/8–in. NPTF pipe thread hole in the regulator cover and to a 1/4–in. pipe thread connection in the top of the mixer housing.

IMPCO® is a registered trademark of IMPCO Technologies, Inc.

The purpose of the regulator is to provide a controlled flow of natural gas to maintain regulator outlet fuel pressure at a pressure nearly equal to air pressure (turbo boost) at the inlet to the mixer. Gas enters the regulator at a pressure of approximately 110 PSI. See Figure 2-145.

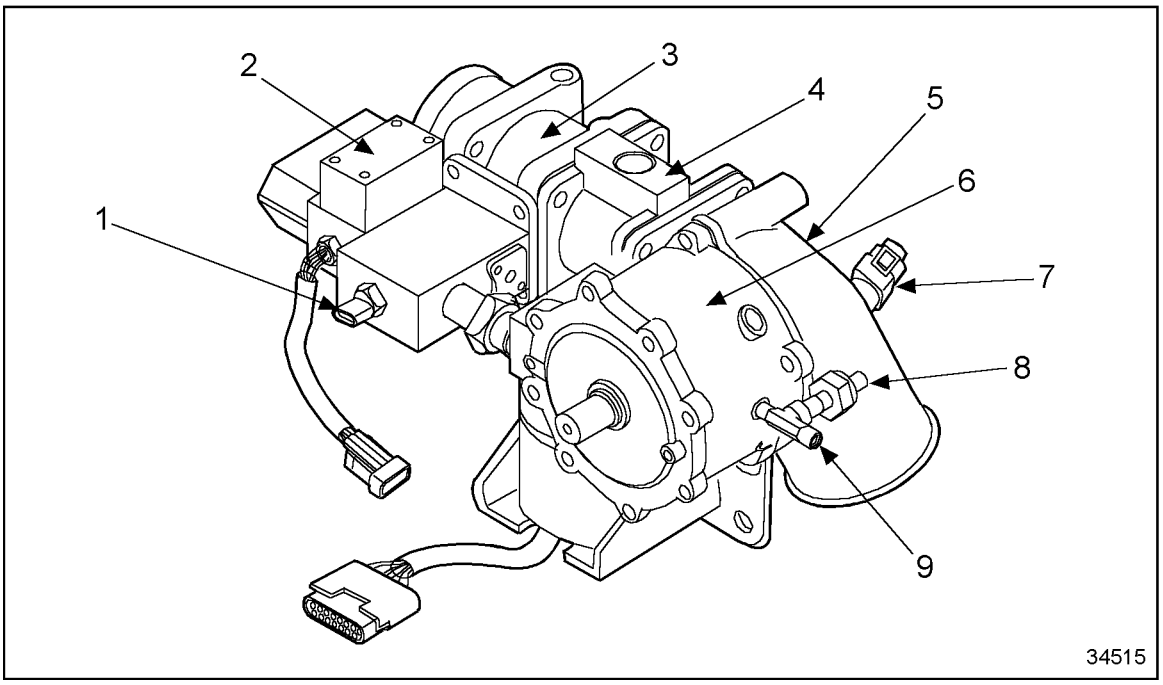

1. Fuel Temperature Sensor
2. PSV
3. Fuel Mixer
4. Throttle
5. Air Inlet Elbow
6. Low Pressure Regulator
7. Air Temperature Sensor
8. Fuel Pressure Sensor
9. Fuel Inlet Tee-Fitting

Figure 2-145 60G Throttle with Integrated Actuator

(Rev. 2004) *All information subject to change without notice.*
6SE483 0401 Copyright © 2004 DETROIT DIESEL CORPORATION

2.48.1 Replacement of the Low Pressure Regulator for the Series 60G Engine

The low pressure fuel regulator is not serviceable and should be replaced as a unit. No adjustment is required.

2.48.2 Removal of the Low Pressure Regulator for the Series 60G Engine

Remove the low pressure fuel regulator as follows:

CAUTION:

To avoid injury from the explosion of natural gas, the engine must be kept in a well-ventilated area away from open flames, sparks, and electrical resistance (heating) coils.

1. Vent fuel system, refer to section 2.52.
2. Disconnect fuel supply hose at the regulator.
3. Disconnect fuel pressure sensor from engine sensor wiring harness.
4. Drain coolant.
5. Disconnect coolant supply and return hoses at regulator.
6. Disconnect air balance hose at regulator cover.
7. Remove two M6 regulator to air inlet elbow mounting bolts. Support regulator to avoid cocking the connector tube in the PSV and possibly damaging the PSV gas inlet bore.
8. Slide regulator rearward to disengage outlet connector tube from the PSV.
9. Remove gas inlet tee, fuel pressure sensor, coolant inlet fittings, coolant outlet fittings, balance hose fitting, outlet connector tube and O-rings for reuse.

2.48.3 Installation of the Low Pressure Regulator for the Series 60G Engine

Install the low pressure fuel regulator as follows:

NOTICE:

Use caution when installing hoses to avoid twisting or kinking the hose. This could result in increased flow restriction and affect engine performance.

 Copyright © 2004 DETROIT DIESEL CORPORATION

CAUTION:

To avoid injury from an explosion of natural gas, the following precautions must be taken:

- **Do not smoke when installing or servicing the engine or fuel system.**
- **Installation or servicing of natural-gas equipment must only be conducted in well-ventilated, natural gas compatible areas. Do not install or service equipment in an enclosed area where ignition sources are present without first ensuring that an undetected gas leak may be safely vented without being ignited.**
- **Bleed natural gas lines before installing or servicing any component connected to the fuel lines.**
- **Natural gas fuel systems are pressurized. Relieve pressure from any fuel system component prior to installation or service of that component.**
- **Use a combustible-gas detector. Liquefied natural gas (LNG) is odorless and cannot be detected by smell. Compressed Natural gas (CNG) may be odorless and may not be detected by smell.**
- **Equipment fuel systems are the responsibility of the Original Equipment Manufacturer (OEM). Equipment fuel system guidelines must be closely adhered to when installing or servicing equipment. Refer to OEM guidelines specifying which maintenance procedures require venting of fuel lines and fuel tanks.**
- **LNG systems are pressurized and contain extremely cold (-260°F [-162°C]) fluids. Contact the fuel supplier or OEM for LNG safety requirements. Contact with LNG may cause personal injury (freezing).**
- **Vent systems on the equipment should be ducted to a safe area whenever equipment is in an enclosed area.**

Natural gas is highly flammable and explosive and may be extremely cold (-260°F [-162°C]).

1. Install gas inlet tee, fuel pressure sensor, coolant inlet fittings, coolant outlet fittings, balance hose fitting, outlet connector tube and O-rings.
2. Lubricate connector O-rings.

(Rev. 2004) *All information subject to change without notice.*
6SE483 0401 Copyright © 2004 DETROIT DIESEL CORPORATION

3. Position regulator on air inlet elbow with outlet connector aligned with bore in PSV. Slide regulator forward engaging outlet tube in PSV until regulator mounting bolt holes are aligned.
4. Install two M6 mounting bolts.
5. Connect fuel supply hose.
6. Connect coolant supply and return hoses.
7. Refill with coolant.
8. Connect air balance hose.
9. Connect fuel pressure sensor to engine sensor wiring harness.
10. Clear AFR learn table using DDR.
11. Start engine and check hoses and fitting for leaks. Refer to section 2.40.3.

 Copyright © 2004 DETROIT DIESEL CORPORATION

2.49 OVERVIEW OF THE LOW PRESSURE NATURAL GAS FUEL SYSTEM

The purpose of the fuel system is to store the fuel, keep it clean and free from air, water, or other impurities and to deliver it to the combustion chamber at the correct pressure, temperature, air and fuel mixture. The Series 60G engine requires an adequate fuel supply for proper performance and to develop full-rated power. This section describes the Detroit Diesel Series 60G compressed natural gas fuel system.

The following are DDC supplied parts:

- ☐ Pulse width modulated stepper motor valve (PSV)
- ☐ Low pressure regulator
- ☐ Venturi fuel mixer
- ☐ Regulator hoses
- ☐ Air inlet tube

The following are OEM supplied parts:

- ☐ Gas inlet pipe
- ☐ Genset controlled gas shutoff valve

The fuel system uses computer calculations for both fuel flow and air flow, while maintaining a lean air - fuel mixture for low emissions and good fuel economy. Calculations are based on knowing the temperature of the air and fuel along with the temperature and pressure of the fuel and air mixture in the inlet manifold. The air temperature sensor is located in the air intake tube located in front of the gas mixer. The fuel temperature sensor is located in the gas mixer. An intake manifold pressure sensor is located in the intake manifold. See Figure 2-146.

(Rev. 2004) *All information subject to change without notice.*
6SE483 0401 Copyright © 2004 DETROIT DIESEL CORPORATION

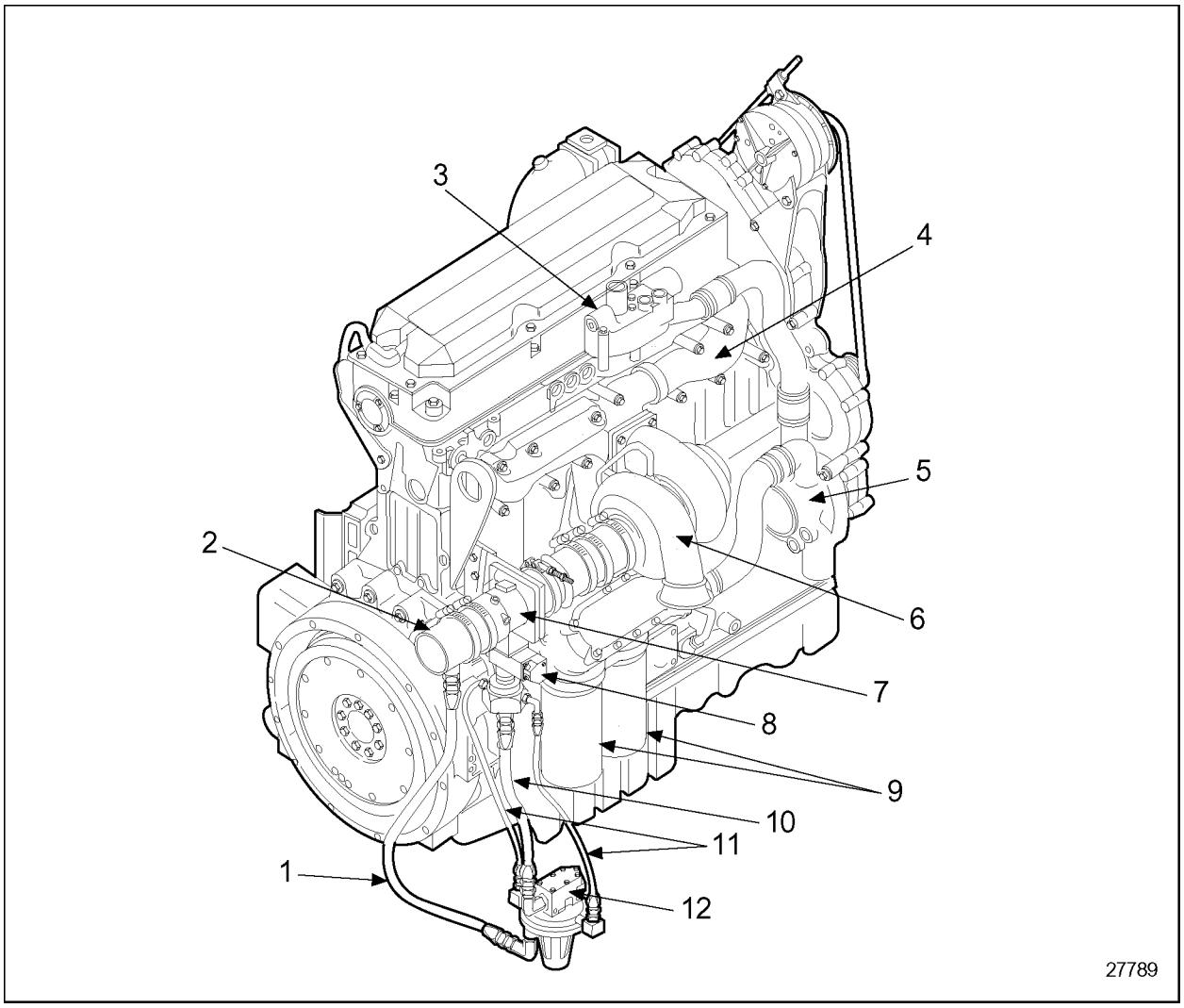

1. Air Balance Hose
2. Air Inlet Tube
3. Thermostat Housing
4. Exhaust Manifold
5. Fresh Water Pump
6. Turbocharger
7. Fuel Mixer Assembly
8. Pulse Width Modulated Stepper Motor Valve (PSV)
9. Lube Oil Filters
10. Fuel Supply Hose
11. Fuel Balance Hoses
12. Low Pressure Regulator

Figure 2-146 Low Pressure Fuel System (Series 60G Engine)

 Copyright © 2004 DETROIT DIESEL CORPORATION

CAUTION:

To avoid injury from an explosion of natural gas, the following precautions must be taken:

- ☐ **Do not smoke when installing or servicing the engine or fuel system.**
- ☐ **Installation or servicing of natural-gas equipment must only be conducted in well-ventilated, natural gas compatible areas. Do not install or service equipment in an enclosed area where ignition sources are present without first ensuring that an undetected gas leak may be safely vented without being ignited.**
- ☐ **Bleed natural gas lines before installing or servicing any component connected to the fuel lines.**
- ☐ **Natural gas fuel systems are pressurized. Relieve pressure from any fuel system component prior to installation or service of that component.**
- ☐ **Use a combustible-gas detector. Liquefied natural gas (LNG) is odorless and cannot be detected by smell. Compressed Natural gas (CNG) may be odorless and may not be detected by smell.**
- ☐ **Equipment fuel systems are the responsibility of the Original Equipment Manufacturer (OEM). Equipment fuel system guidelines must be closely adhered to when installing or servicing equipment. Refer to OEM guidelines specifying which maintenance procedures require venting of fuel lines and fuel tanks.**
- ☐ **LNG systems are pressurized and contain extremely cold (-260°F [-162°C]) fluids. Contact the fuel supplier or OEM for LNG safety requirements. Contact with LNG may cause personal injury (freezing).**
- ☐ **Vent systems on the equipment should be ducted to a safe area whenever equipment is in an enclosed area.**

Natural gas is highly flammable and explosive and may be extremely cold (-260°F [-162°C]).

(Rev. 2004) *All information subject to change without notice.*
6SE483 0401 Copyright © 2004 DETROIT DIESEL CORPORATION

CAUTION:

To avoid injury from the explosion of natural gas, the engine must be kept in a well-ventilated area away from open flames, sparks, and electrical resistance (heating) coils.

The Series 60 natural gas engine low pressure fuel system consists of a venturi type fuel mixer, Pulsewidth Modulated Stepper Motor Valve (PSV), and low pressure regulator. It is referred to as a "demand" system in that the venturi mixer generates a suction at the regulator outlet. The regulator adjusts its outlet pressure in response to the demand (suction) of the venturi resulting in an increase of fuel flow. The opposite is true for conditions requiring a decrease in fuel flow. See Figure 2-147.

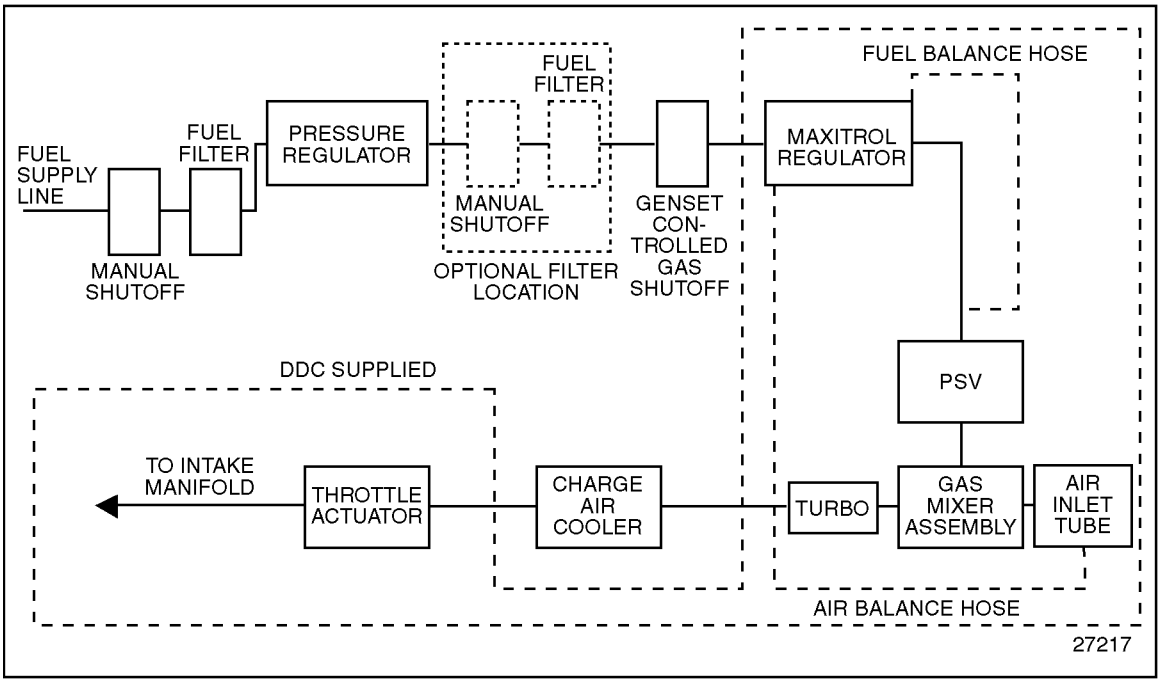

Figure 2-147 Low Pressure Natural Gas Fuel System (Series 60G Engine)

 Copyright © 2004 DETROIT DIESEL CORPORATION

Fuel supply is routed to the inlet side of the low pressure regulator at a pressure of 1-5 kPa (5-20 in. H_2O). The low pressure regulator is a balanced regulator and as such, reduces this pressure to a level approximately equal to air inlet pressure.

Regulated fuel is routed from the low pressure regulator to the PSV. The PSV is fully controlled by DDEC III/IV and is used to bias fuel flow, rich or lean, based on a predetermined engine calibration.

Fuel from the PSV enters the venturi mixer where it is drawn into and mixed with the airstream ahead of the turbocharger compressor inlet, charge air cooler, throttle and intake manifold.

(Rev. 2004) *All information subject to change without notice.*
6SE483 0401 Copyright © 2004 DETROIT DIESEL CORPORATION

2.50 LOW PRESSURE FUEL REGULATOR FOR THE SERIES 60G ENGINE

The low pressure fuel regulator is mounted on the generator base on the right side of the engine. This location minimizes the distance between the regulator outlet and the inlet of the PSV. There are four hoses connecting the regulator to the engine; the fuel supply, one air balance and two fuel balance hoses. See Figure 2-146.

2.50.1 Reuse or Replacement of the Low Pressure Fuel Regulator for the Series 60G Engine

The low pressure fuel regulator is not serviceable and should be replaced as a unit. No adjustment is required.

2.50.2 Removal of the Low Pressure Fuel Regulator for the Series 60G Engine

Remove the low pressure fuel regulator as follows:

CAUTION:

To avoid injury from the explosion of natural gas, the engine must be kept in a well-ventilated area away from open flames, sparks, and electrical resistance (heating) coils.

1. Vent fuel system; refer to section 2.52.1and refer to section 2.52.2.
2. Disconnect and remove 1 in. air balance hose.
3. Disconnect and remove the two 3/8 in. fuel balance lines.
4. Disconnect and remove the 1 1/4 in. fuel supply line.
5. Remove the low pressure fuel regulator and fuel inlet pipe from the mounting bracket.
6. Remove fuel inlet pipe from regulator.

 Copyright © 2004 DETROIT DIESEL CORPORATION

2.50.3 Disassembly of the Low Pressure Fuel Regulator for the Series 60G Engine

Disassembly of the low pressure fuel regulator is not required.

2.50.4 Cleaning of the Low Pressure Fuel Regulator for the Series 60G Engine

Cleaning of the low pressure fuel regulator is not required.

2.50.4.1 Inspection of the Low Pressure Fuel Regulator for the Series 60G Engine

Inspection of the low pressure fuel regulator is not required.

2.50.4.2 Test of the Low Pressure Fuel Regulator for the Series 60G Engine

Test of the low pressure fuel regulator is not required.

2.50.5 Installation of the Low Pressure Fuel Regulator for the Series 60G Engine

Install the low pressure fuel regulator as follows:

1. Install fuel inlet pipe into the regulator.
2. Secure the low pressure fuel regulator and inlet pipe to the mounting bracket.
3. Connect the 1 1/4 in. fuel supply line.

NOTICE:
Use caution when installing hoses to avoid twisting or kinking the hose. This could result in increased flow restriction and affect engine performance.

4. Connect the two 3/8 in. fuel pressure balance lines.
5. Connect the 1 in. air balance line.

(Rev. 2004) *All information subject to change without notice.*
6SE483 0401 Copyright © 2004 DETROIT DIESEL CORPORATION

⚠ CAUTION:

To avoid injury from an explosion of natural gas, the following precautions must be taken:

- ☐ **Do not smoke when installing or servicing the engine or fuel system.**
- ☐ **Installation or servicing of natural-gas equipment must only be conducted in well-ventilated, natural gas compatible areas. Do not install or service equipment in an enclosed area where ignition sources are present without first ensuring that an undetected gas leak may be safely vented without being ignited.**
- ☐ **Bleed natural gas lines before installing or servicing any component connected to the fuel lines.**
- ☐ **Natural gas fuel systems are pressurized. Relieve pressure from any fuel system component prior to installation or service of that component.**
- ☐ **Use a combustible-gas detector. Liquefied natural gas (LNG) is odorless and cannot be detected by smell. Compressed Natural gas (CNG) may be odorless and may not be detected by smell.**
- ☐ **Equipment fuel systems are the responsibility of the Original Equipment Manufacturer (OEM). Equipment fuel system guidelines must be closely adhered to when installing or servicing equipment. Refer to OEM guidelines specifying which maintenance procedures require venting of fuel lines and fuel tanks.**
- ☐ **LNG systems are pressurized and contain extremely cold (-260°F [-162°C]) fluids. Contact the fuel supplier or OEM for LNG safety requirements. Contact with LNG may cause personal injury (freezing).**
- ☐ **Vent systems on the equipment should be ducted to a safe area whenever equipment is in an enclosed area.**

Natural gas is highly flammable and explosive and may be extremely cold (-260°F [-162°C]).

 Copyright © 2004 DETROIT DIESEL CORPORATION

NOTICE:
When installing the low pressure fuel regulator components which supply the natural gas, apply an aerobic pipe sealant containing Teflon such as SWAK®to the component threads. Never apply sealant to the compression fittings.

NOTICE:
After installation of the low pressure fuel regulator, always check for leaks with a soapy water solution or equivalent.

6. Check hoses and fittings for leaks; refer to section 2.52.3.

(Rev. 2004) *All information subject to change without notice.*
6SE483 0401 Copyright © 2004 DETROIT DIESEL CORPORATION

2.51 FUEL MIXER FOR THE SERIES 60G LOW PRESSURE SYSTEM

The venturi fuel mixer assembly consists of a die cast aluminum body with a spun aluminum venturi permanently inserted into it. The unit has no moving parts. The mixer assembly is attached to support brackets and located at the right rear of the engine. See Figure 2-148.

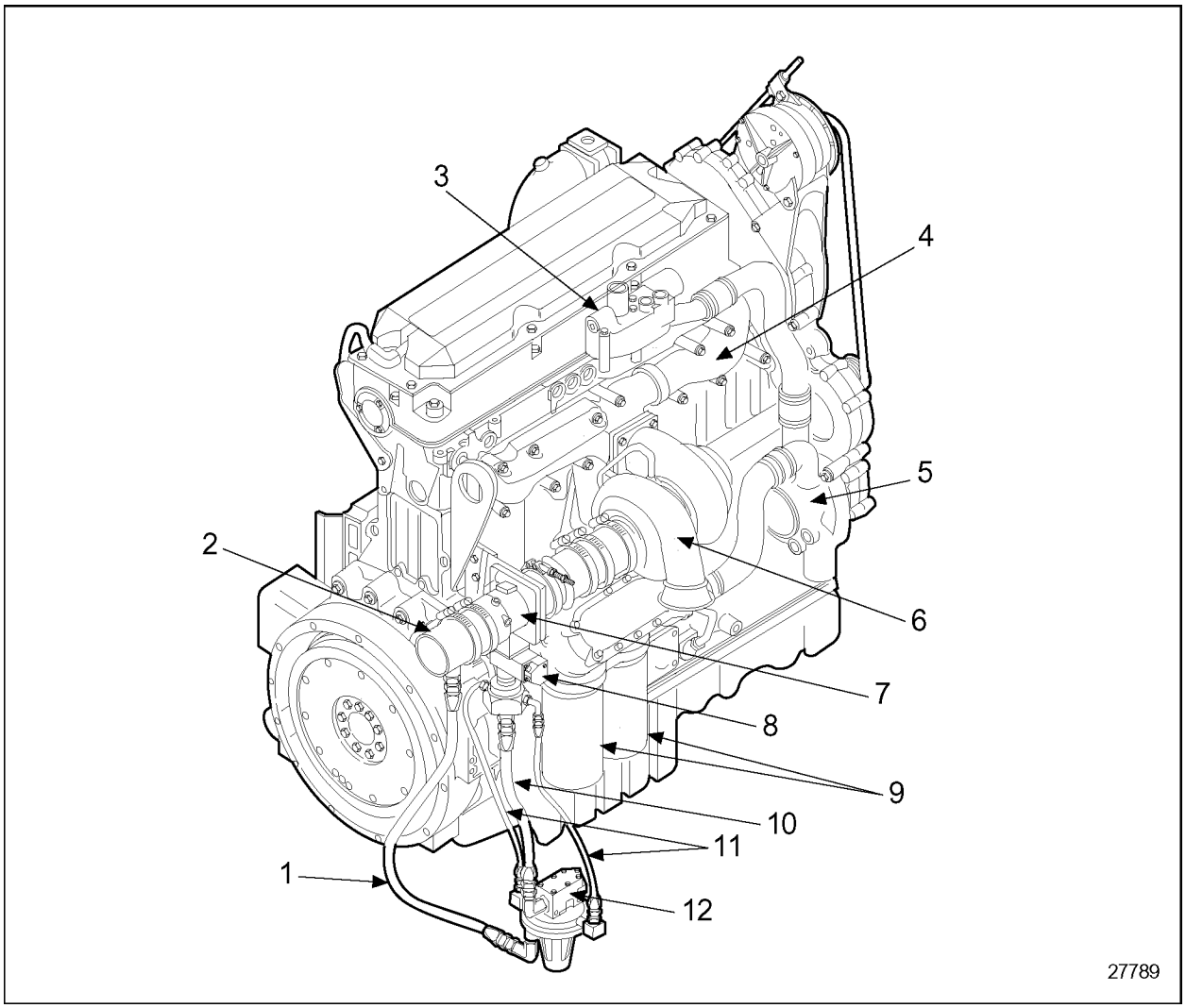

1. Air Balance Hose
2. Air Inlet Tube
3. Thermostat Housing
4. Exhaust Manifold
5. Fresh Water Pump
6. Turbocharger
7. Fuel Mixer Assembly
8. Pulse Width Modulated Stepper Motor Valve (PSV)
9. Lube Oil Filters
10. Fuel Supply Hose
11. Fuel Balance Hoses
12. Low Pressure Regulator

Figure 2-148 Low Pressure Fuel System (Series 60G Engine)

 Copyright © 2004 DETROIT DIESEL CORPORATION

2.51.1 Replacement of Fuel Mixer for the Series 60G (Low Pressure System)

The fuel mixer is non-serviceable and should be replaced as a unit. No adjustment is required.

2.51.2 Removal of Fuel Mixer for the Series 60G (Low Pressure System)

Remove the fuel mixer as follows:

CAUTION:

To avoid injury from the explosion of natural gas, the engine must be kept in a well-ventilated area away from open flames, sparks, and electrical resistance (heating) coils.

1. Vent fuel system; refer to section 2.52.1and refer to section 2.52.2.
2. Disconnect and remove the PSV from the fuel mixer, refer to section 2.45.2.
3. Remove four fuel mixer mounting bolts.
4. Separate and remove the fuel mixer from the mounting bracket.

2.51.3 Disassembly of Fuel Mixer for the Series 60G (Low Pressure System)

Disassembly of the fuel mixer is not required.

2.51.4 Cleaning of Fuel Mixer for the Series 60G (Low Pressure System)

Cleaning of the fuel mixer is not required.

2.51.4.1 Inspection of Fuel Mixer for the Series 60G (Low Pressure System)

Inspection of the fuel mixer is not required.

(Rev. 2004) *All information subject to change without notice.*
6SE483 0401 Copyright © 2004 DETROIT DIESEL CORPORATION

2.51.4.2 Test of Fuel Mixer for the Series 60G (Low Pressure System)

Test of the fuel mixer is not required.

2.51.5 Installation of Fuel Mixer for the Series 60G (Low Pressure System)

Install the fuel mixer as follows:

1. Clean gasket surface and install a new gasket.
2. Secure the fuel mixer to the mounting bracket with four bolts. Torque to 20 N·m (15 lb·ft).
3. Install the PSV to the fuel mixer, refer to section 2.45.3.
4. Install air inlet hose and secure with V-band clamp. This hose must be of the current design that has a black interior surface. All former hoses have a blue interior surface and must be replaced. Also, the part number is printed on the exterior surface of the hose.
5. Perform a leak check procedure. Refer to section 2.52.3.

 Copyright © 2004 DETROIT DIESEL CORPORATION

2.52 VENTING AND LEAK CHECKING PROCEDURES FOR NATURAL GAS ENGINE (LOW PRESSURE SYSTEM)

Refer to section 2.52.1 for venting and checking of an operable engine and refer to section 2.52.2 for venting and checking of an inoperable engine.

2.52.1 Venting an Operable Engine to Relieve Natural Gas Pressure

If the engine *can run*, use the following venting procedure to relieve the natural gas pressure downstream of the shutoff valve:

CAUTION:

To avoid injury from the explosion of natural gas, the engine must be kept in a well-ventilated area away from open flames, sparks, and electrical resistance (heating) coils.

1. Turn off manual shutoff valve on natural gas fuel supply line.
2. Start engine and run until it stalls due to fuel starvation.
3. Disconnect the batteries using switch(s) in the battery compartment or by disconnecting the battery ground cable.
4. Slightly loosen the NG fuel line fitting to be serviced in a well-ventilated area to allow any remaining gas to vent.
5. Completely open the fitting that was slightly opened and allow to vent in a well-ventilated area.

2.52.2 Venting an Inoperable Engine to Relieve Natural Gas Pressure

If the engine *cannot run*, use the following venting procedure to relieve the natural gas pressure downstream of the shutoff valve:

CAUTION:

To avoid injury from the explosion of natural gas, the engine must be kept in a well-ventilated area away from open flames, sparks, and electrical resistance (heating) coils.

1. Turn off manual shutoff valve on natural gas fuel supply line.
2. Disconnect the batteries using switch(s) in the battery compartment or by disconnecting the battery ground cable.

(Rev. 2004) *All information subject to change without notice.*
6SE483 0401 Copyright © 2004 DETROIT DIESEL CORPORATION

3. Open fitting (before and after genset shutoff valve) to assure all pressure has been relieved in the natural gas fuel line.
4. Check all connections that were loosened for leaks after installation, service and troubleshooting are complete.

2.52.3 Leak Checking the Natural Gas Fuel System

Use the following steps to check for leaks:

1. Open manual shutoff valve.
2. Start engine and run with no electrical load on generator.
3. Spray soapy water or commercially available leak checking solutions on connections. Bubbles will form if there is a leak.
4. Repair any leak by:
   [a] Shut down the engine and close the manual shut off valve.
   [b] Tighten connection using the fitting technique of the manufacturer.

NOTE:
Vent fuel lines before replacing leaking components; refer to section 2.52.1 and refer to section 2.52.2. This will prevent a discharge of gas.

   [c] Replace leaking component.
   [d] Replace the pipe-threaded connector with a new one if the leak is a pipe thread connection. Use anaerobic sealant with Teflon (such as SWAK®) applied to the threads.
5. Re-check connection with procedure in step 1thru step 3.
6. Use a combustible gas detector to check for presence of natural gas. If natural gas is detected, continue looking for leaks until the locations of all the leaks are determined.
7. Repair the leak using the procedure in step 4.

 Copyright © 2004 DETROIT DIESEL CORPORATION

(Rev. 2004) All information subject to change without notice.
6SE483 0401 Copyright © 2004 DETROIT DIESEL CORPORATION

2.A ADDITIONAL INFORMATION

Description **Page**

SHOP NOTES 2-300
Fuel Lines 2-300
SPECIFICATIONS 2-301
Exceptions to Standard Fastener Torque Specifications 2-301

 Copyright © 2004 DETROIT DIESEL CORPORATION

SHOP NOTES

The following shop notes describe flexible fuel lines and their installation.

Fuel Lines

Flexible fuel lines are used to facilitate connection of lines leading to and from the fuel tank, and to minimize the effects of any vibration in the installation.

An 0.080 in. restricted orifice is incorporated in the fuel return fitting (upper fitting) at the rear of the cylinder head to maintain fuel pressure in the cylinder head. Do not use restricted fittings anywhere else in the fuel system, and do not substitute a standard fitting for the restricted fitting.

The 0.080 in. restricted orifice is designed to provide the proper fuel system pressure under all conditions. Do not alter or substitute another size since this may alter engine performance and emissions.

When installing fuel lines, it is recommended that connections be tightened only sufficiently to prevent leakage of fuel; thus flared ends of the fuel lines will not become twisted or fractured because of excessive tightening. After all fuel lines are installed, run the engine long enough to determine if all the connections are sufficiently tight. If any leaks occur, tighten the connections only enough to stop the leak. Also check that the fuel filters are tight against the filter adaptors. Do not overtighten filters.

(Rev. 2004) *All information subject to change without notice.*
6SE483 0401 Copyright © 2004 DETROIT DIESEL CORPORATION

SPECIFICATIONS

Specifications are listed in the General Information section at the beginning of the manual. Exceptions are listed below:

Exceptions to Standard Fastener Torque Specifications

Exceptions to Standard Fastener Torque Specifications supporting the Series 60 Engine are listed in Table 2-18 and also listed in Table 2-19.

Fastener	Size	Torque, N·m	Torque, lb·ft
Bolt, Injector Clamp	M10 x 1.5	55-66	43-49

Table 2-18 Exceptions to Standard Fastener Specifications

Fastener	Size	Torque, N·m	Torque, in.·lb
Bolt, Turbo Boost Sensor-to-inlet	M5 x 0.8	2.4-3.0	21-26
Screw, Harness Connector-to-EDU	No.10-24	2.4-3.0	21-26
Screw, Harness Connector-to-ECM	No.10-24	2.4-3.0	21-26
Screw, Injector Wire Connector	M3 x 0.5	1.4-2.0	12-18

Table 2-19 Exceptions to Standard Fastener Torque Specifications

 Copyright © 2004 DETROIT DIESEL CORPORATION

 Copyright © 2004 DETROIT DIESEL CORPORATION

3 LUBRICATION SYSTEM

Section		Page
3.1	OVERVIEW OF LUBRICATING SYSTEM	3-3
3.2	OIL PUMP	3-8
3.3	OIL PRESSURE REGULATOR VALVE	3-23
3.4	OIL PRESSURE RELIEF VALVE	3-30
3.5	OIL FILTER	3-36
3.6	OIL FILTER ADAPTOR	3-40
3.7	THERMATIC OIL CONTROL VALVE	3-46
3.8	OIL COOLER (1991 AND LATER ENGINES)	3-53
3.9	OIL COOLER (PRE-1991 ENGINES)	3-64
3.10	OIL LEVEL DIPSTICK ASSEMBLY	3-74
3.11	OIL PAN	3-79
3.12	VENTILATING SYSTEM	3-87
3.A	ADDITIONAL INFORMATION	3-95

 Copyright © 2004 DETROIT DIESEL CORPORATION

3.1 OVERVIEW OF LUBRICATING SYSTEM

The lubrication system consists of the following components:

- ☐ Oil pump
- ☐ Pressure regulator valve
- ☐ Pressure relief valve
- ☐ Oil filters
- ☐ Oil filter adaptor
- ☐ Oil cooler
- ☐ Oil level dipstick
- ☐ Oil pan
- ☐ Ventilating system

 Copyright © 2004 DETROIT DIESEL CORPORATION

A schematic of the lubricating system is shown in the following illustration. See Figure 3-1.

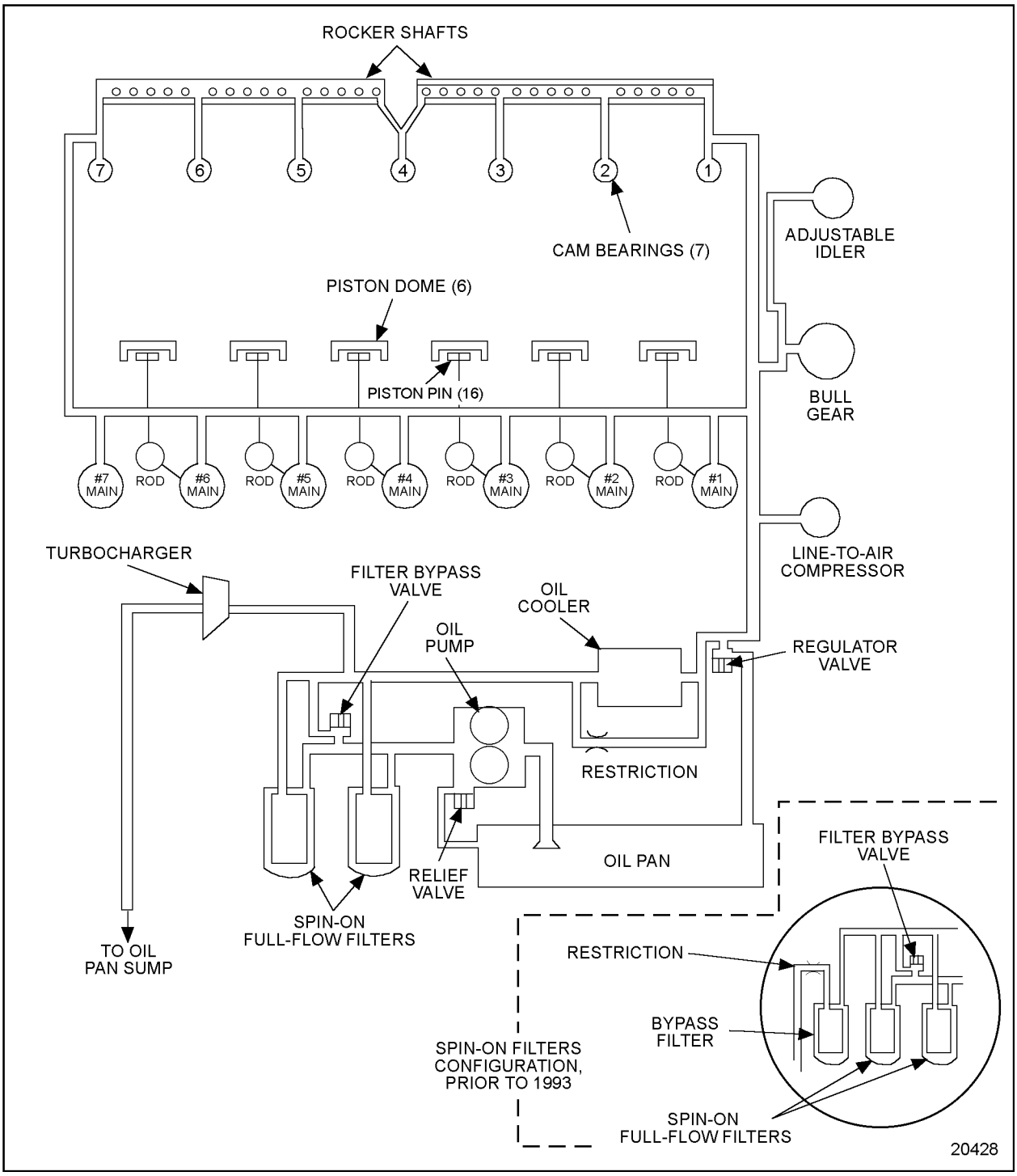

Figure 3-1 Schematic Diagram of Current Lubrication System

(Rev. 2004) *All information subject to change without notice.*
6SE483 0401 Copyright © 2004 DETROIT DIESEL CORPORATION

Oil leaving the pump is forced through the full-flow filters to the oil cooler and bypass passage and then into the oil gallery in the cylinder block. From there the oil is distributed to the various engine bearings and moving parts. Prior to 1993, a bypass type, spin-on filter was used in addition to the two full-flow oil filters. A portion of the oil is continually fed through the bypass filter and returned to the engine oil pan. Drains from the cylinder head and other engine parts return oil back to the oil pan.

Oil from the cooler is directed to a longitudinal main oil gallery on the cooler side of the cylinder block. See Figure 3-1. This gallery distributes the pressurized oil to the main bearings and to a horizontal, transverse passage at each end of the cylinder block. From each of these two horizontal passages, oil flows into two vertical bores (one at each end of the cylinder block) to vertical passages in the cylinder head.

These passages in the cylinder head deliver oil from the cylinder block to the No. 1 and 7 lower camshaft bearing saddles. From there, the oil is directed upward (through the enlarged stud hole) to the No. 1 and 7 upper camshaft bearing caps. A drilled passage in each of these caps exits at the rocker arm shaft seat area, where it indexes rocker arm bushings and intermediate upper camshaft bearings. Some of the oil supplied goes to the rocker arm camshaft follower, roller pin and bushing.

The rocker is also drilled to supply oil to the valve adjusting screw, valve button, retainer clip, intake and exhaust valve stems and the fuel injector follower. The No. 4 camshaft cap is Y drilled, forming an oil path connection between the front and rear rocker arm shafts, to ensure complete lubrication. The oil then drains through passages in the cylinder head and block, and back to the oil pan.

Oil for lubricating the connecting rod bearings, piston pins and for cooling the piston dome is provided through the drilled crankshaft from the adjacent forward main bearings.

 Copyright © 2004 DETROIT DIESEL CORPORATION

Two holes in the bull gear recess area of the cylinder block are drilled into the cylinder block front-cross oil gallery, and supply oil to the bull gear bearings, bull gear and camshaft idler gear and hub. See Figure 3-2.

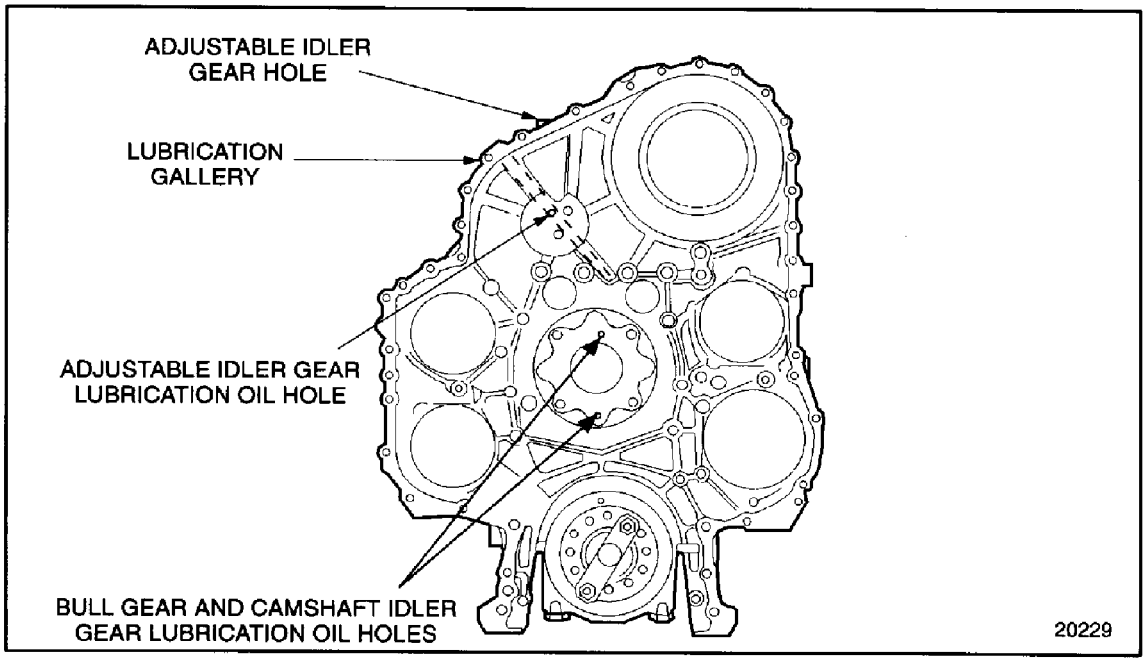

Figure 3-2 Gear Train Oil Supply Holes

Excess oil from the bull gear lubricates the crankshaft timing gear and oil pump drive gear. A hole at the top, front of the block, drilled into the block front-cross oil gallery, mates with an oil passage in the gear case that directs oil to the adjustable idler gear assembly. See Figure 3-2. Excess oil from the adjustable idler gear lubricates the accessory drive and water pump drive gears. The bearings and shafts of these two drive assemblies are splash-fed oil through holes in their housings.

A flexible, external oil line runs from a threaded hole at the top, front corner of the left side of the cylinder block, which is tapped into the main oil gallery. The flexible line runs to a fitting at the air compressor assembly.

Oil drains from the air compressor through a hole in the air compressor drive housing into the gear case.

NOTE:
On early Series 60 engines, there was a "T" fitting in the air compressor drive assembly. A flexible external oil line ran from the cylinder block to this "T" fitting and another line ran from the "T" fitting to the air compressor assembly.

(Rev. 2004) *All information subject to change without notice.*
6SE483 0401 Copyright © 2004 DETROIT DIESEL CORPORATION

A flexible, external oil line feeds oil from the oil filter adaptor housing pressure gallery to the turbocharger bearings and shaft. This oil is returned through an external line to the block near the block oil pan split line and then back to the oil pan.

Use the proper viscosity grade and type of heavy-duty oil. Refer to section 5.2.1.

Series 60 engines use red dye to detect lube oil system leaks during engine testing at the factory. Customers receiving new engines may notice some residual dye remaining in the lube oil systems. This dye should be quickly dispersed after the first few hours of engine operation, and will have no detrimental affect on the engine.

 Copyright © 2004 DETROIT DIESEL CORPORATION

3.2 OIL PUMP

The gear-type oil pump is mounted to the cylinder block and is gear driven from the front end of the crankshaft. See Figure 3-3.

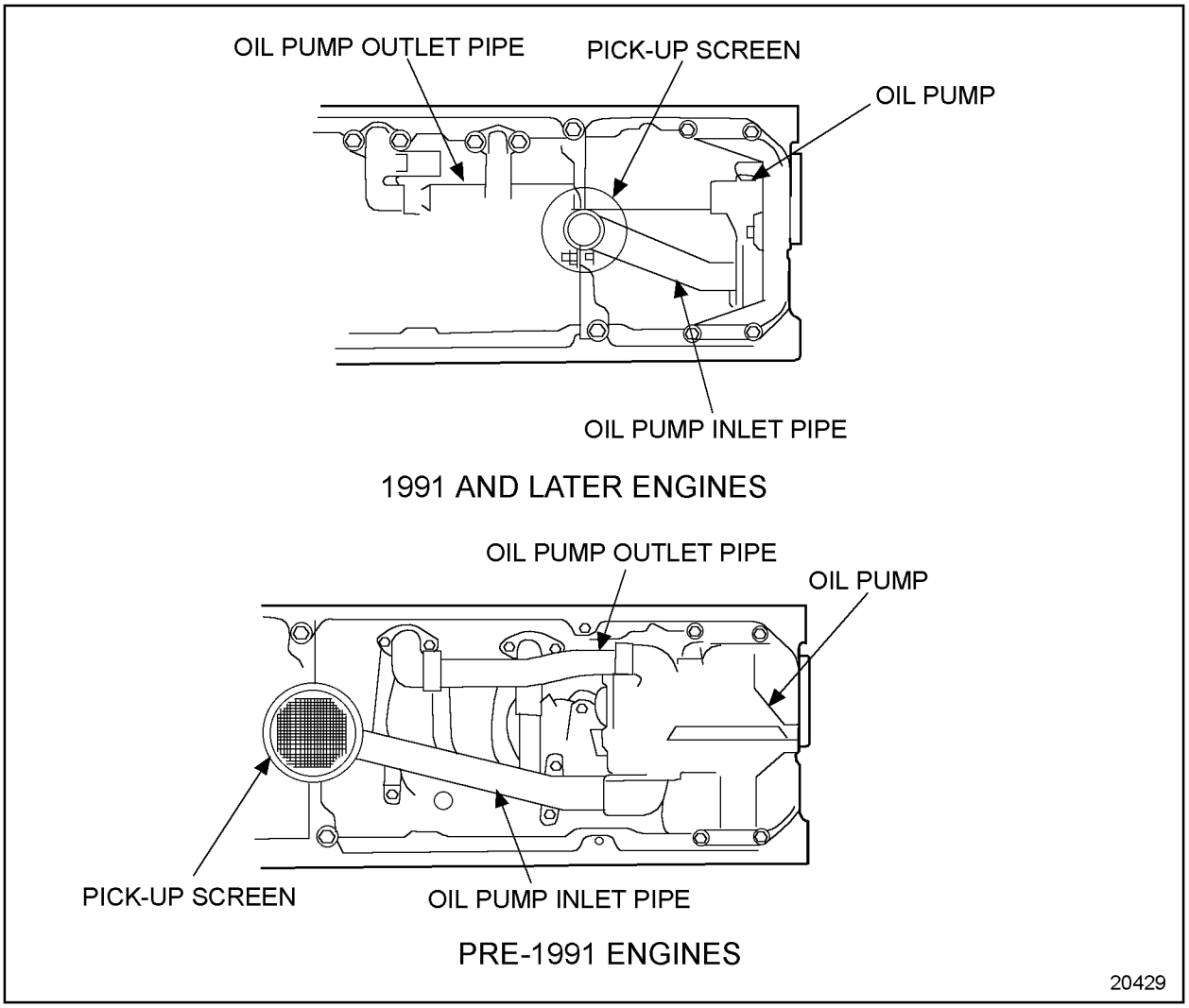

Figure 3-3 Oil Pump Mounting

Effective with 1991 model year engines, the design of the oil pump has been changed. The current oil pump is smaller, and contains a relief valve. See Figure 3-4. On both current and former design oil pumps, the helical gears rotate inside a housing. See Figure 3-5for the former oil pump.

The drive gear is pressed on the drive shaft, which is supported inside the housing on two bushings. The driven gear is pressed on the driven gear shaft, which is supported inside the housing on two bushings.

(Rev. 2004) *All information subject to change without notice.*
6SE483 0401 Copyright © 2004 DETROIT DIESEL CORPORATION

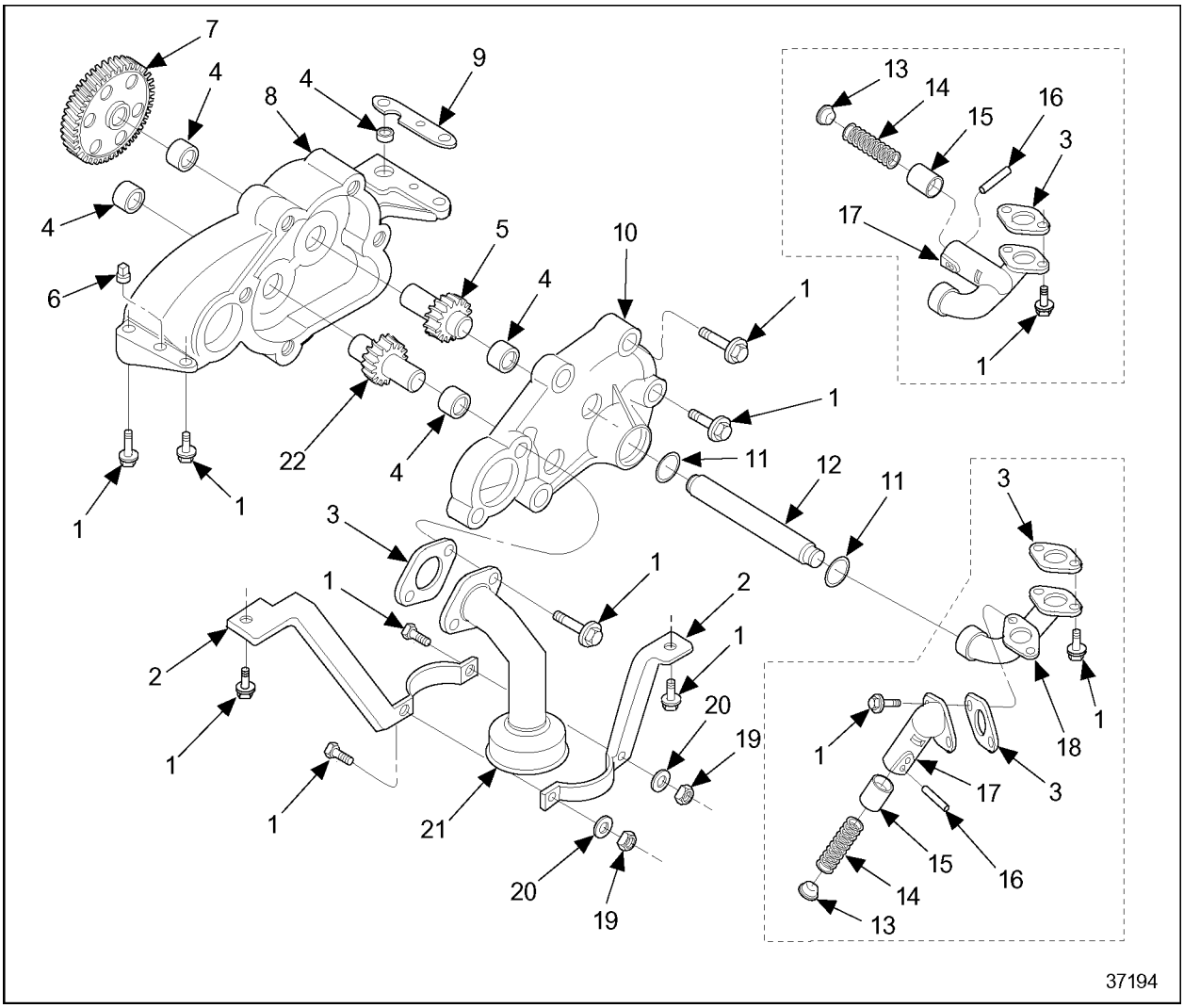
7
4
9
4
8
13
14
16
15
3
4
17
5
10
6
4
1
1
1
22
4
11
12
11
3
1
1
3
1
2
1
2
20
19
1
18
1
1
17
3
1
21
15
16
20
14
19
13
37194

1. Bolt
2. Bracket
3. Gasket
4. Bushing
5. Drive Shaft and Gear Assembly
6. Dowel
7. Gear
8. Oil Pump Body
9. Shim
10. Oil Pump Housing Cover
11. Seal Ring
12. Oil Pump Outlet Tube
13. Spring Seat
14. Spring
15. Relief Valve
16. Pin
17. Relief Valve Housing
18. Oil Pump Outlet Elbow
19. Nut
20. Washer
21. Tube and Screen Assembly
22. Driven Shaft and Gear Assembly

Figure 3-4 Lubricating Oil Pump and Parts - 1991 & Later Engines

(Rev. 2004) *All information subject to change without notice.*
6SE483 0401 Copyright © 2004 DETROIT DIESEL CORPORATION

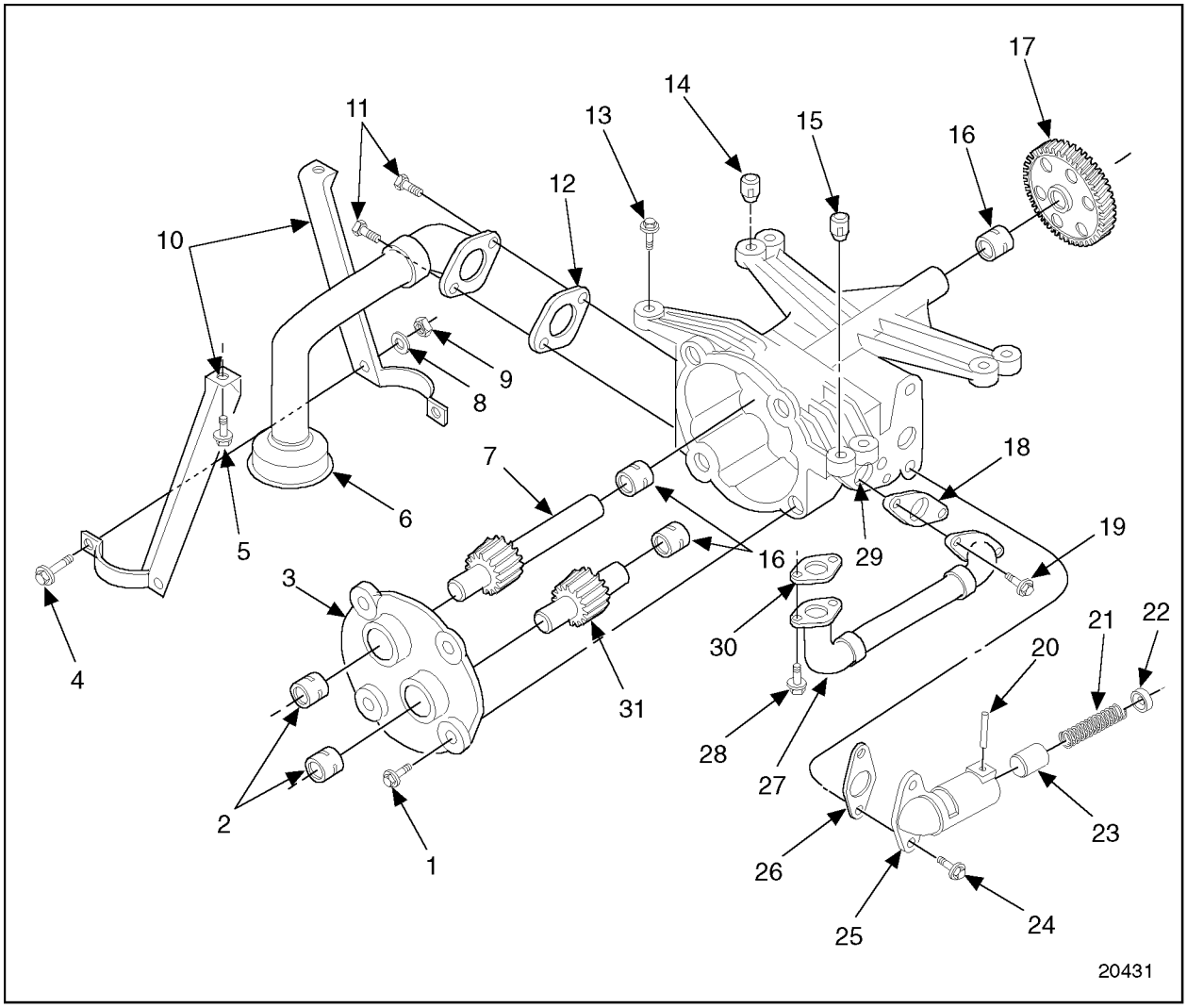
17
14
11
13
15
16
12
10
9
8
7
18
6
5
19
16
29
3
30
21
22
20
4
31
28
27
2
23
1
26
24
25
20431

1. Bolt, Oil Pump Cover (4)
2. Bushing, Oil Pump Cover (2)
3. Cover, Oil Pump Housing
4. Bolt, Screen Bracket-to-Inlet Pipe (2)
5. Bolt, Inlet Pipe Bracket-to-Cylinder Block (2)
6. Pipe and Screen Assembly, Inlet
7. Drive Shaft and Gear Assembly
8. Washer, Screen Bracket-to-Inlet Pipe (2)
9. Nut, Screen Bracket-to-Inlet Pipe (2)
10. Bracket, Inlet Pipe (2)
11. Bolt, Inlet Pipe-to-Pump Body (2)
12. Gasket, Inlet Pipe-to-Pump
13. Bolt, Pump Body-to-Block
14. Dowel, Oil Pump Locating (Round)
15. Dowel, Oil Pump Locating (Diamond)
16. Bushing, Oil Pump Housing (3)
17. Gear, Oil Pump Drive
18. Gasket, Outlet Pipe-to-Oil Pump
19. Bolt, Outlet Pipe-to-Oil Pump Housing (2)
20. Pin, Retaining
21. Spring, Relief Valve
22. Spring, Seat
23. Valve, Relief
24. Bolt, Oil Relief Valve-to-Oil Pump Housing (2)
25. Body, Relief Valve
26. Gasket, Relief Valve-to-Oil Pump
27. Pipe, Outlet
28. Bolt, Outlet Pipe-to-Cylinder Block (2)
29. Body, Oil Pump
30. Gasket, Outlet Pipe-to-Cylinder Block
31. Driven Shaft and Gear Assembly

Figure 3-5 Lubricating Oil Pump Parts (Pre-1991 Engines)

An inlet pipe assembly, with screen, is attached to the inlet opening in the pump body. The screen end of the inlet pipe assembly is supported with brackets mounted to the cylinder block.

The inlet screen is located below the oil in the pan and serves to strain out any foreign material which might damage the pump.

(Rev. 2004) *All information subject to change without notice.*
6SE483 0401 Copyright © 2004 DETROIT DIESEL CORPORATION

3.2.1 Repair or Replacement of Oil Pump

To determine if repair is possible or replacement is necessary, perform the following procedure. See Figure 3-6.

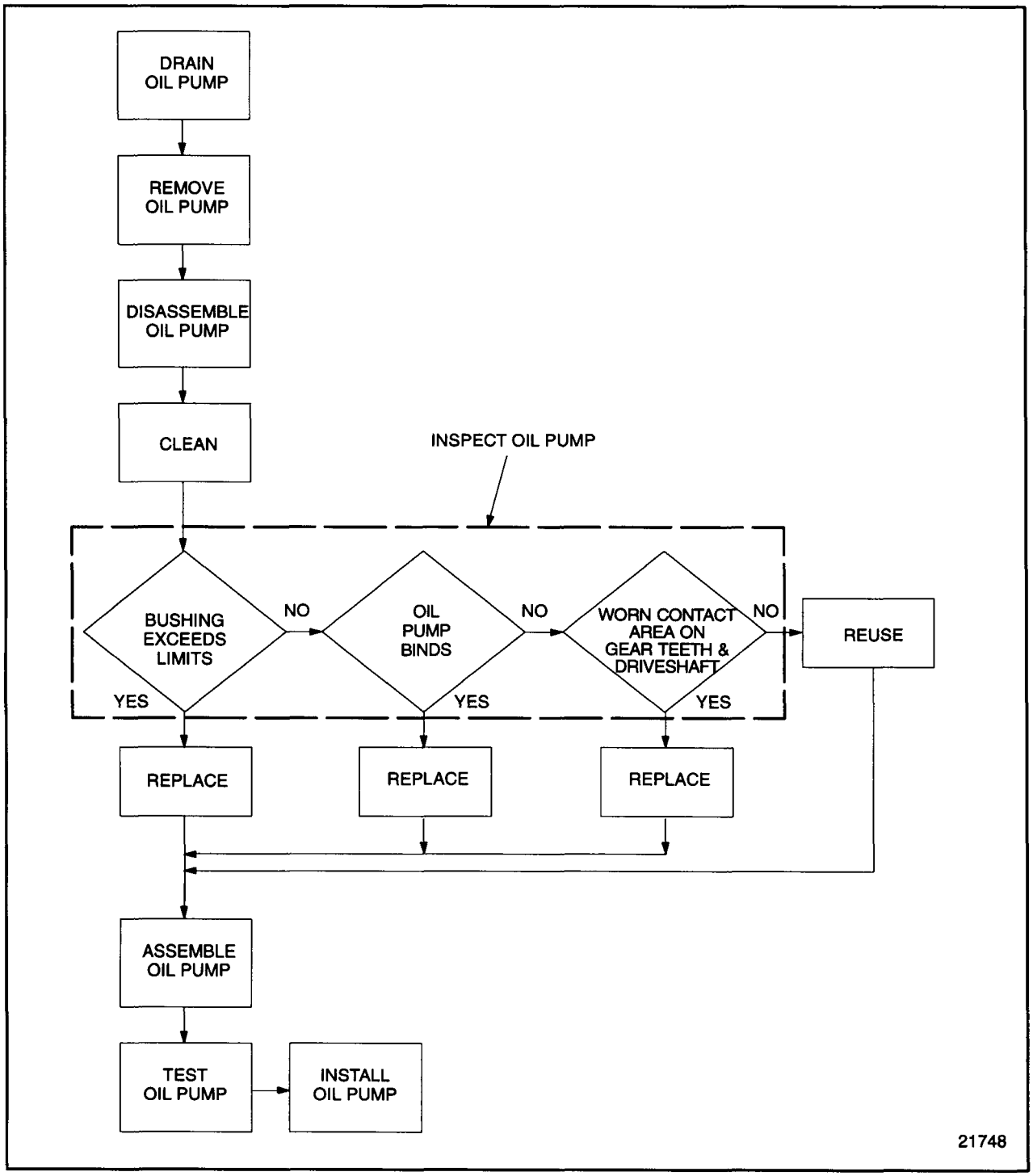

Figure 3-6 Flowchart for Repair or Replacement of Oil Pump

 Copyright © 2004 DETROIT DIESEL CORPORATION

3.2.2 Removal of Oil Pump

Remove the oil pump as follows:

1. Remove the drain plug from the oil pan and drain the oil. Refer to section 13.13.1.
2. Remove the oil pan bolts, isolators, sleeves and washers, and oil pan. Refer to section 3.11.2.

NOTICE:
The thru-bolts must be loosened first to prevent twisting the oil pick-up tube. Failure to do this could cause eventual stress-crack damage at the pick-up tube to flange joints.

3. Loosen but do not remove the thru-bolts securing the oil pump bracket to the pick-up tube.
4. Remove the two bolts that secure the oil pump pick-up tube support bracket to the cylinder block.
5. Remove the two bolts securing the oil pump pick-up tube to the oil pump.
6. Tap the pick-up tube gently to loosen it from the gasket and remove the pipe.
7. Remove the two bolts securing the outlet pipe to the pump and cylinder block.
8. Tap the outlet pipe gently to loosen it from the gaskets and remove the pipe.

NOTICE:
If removing the oil pump from the vehicle, loosen the bolts; but leave them in place to prevent the pump from falling, before the mechanic removes the oil pump.

9. Remove the four bolts retaining the oil pump to the cylinder block.
10. If necessary, pry gently on the oil pump assembly to loosen it from the block.

NOTE:
Remove and save the shims, if used, between the oil pump mounting feet and the cylinder block. The shims are used to adjust the oil pump drive gear-to-crankshaft timing gear lash.

(Rev. 2004) *All information subject to change without notice.*
6SE483 0401 Copyright © 2004 DETROIT DIESEL CORPORATION

3.2.3 Disassembly of Oil Pump

Observe the position of all parts including the oil pick-up tube and outlet pipe during disassembly to facilitate reassembly of the pump.

Disassemble the oil pump as follows:

1. Remove the two bolts securing the oil pressure relief valve to the oil pump housing.
2. Tap the relief valve lightly to loosen it from the gasket and the oil pump housing (pre-1991 engines only).
3. Use a two-jaw puller to remove the oil pump drive gear from its shaft.
4. Remove the four oil pump cover bolts.
5. Remove the oil pump cover.
6. Remove the drive gear and shaft assembly, and the driven gear shaft and assembly from the oil pump housing.

3.2.3.1 Inspection of Oil Pump

Inspect the oil pump as follows:

CAUTION:

To avoid injury from flying debris when using compressed air, wear adequate eye protection (face shield or safety goggles) and do not exceed 40 psi (276 kPa) air pressure.

1. Wash all parts in clean fuel oil and dry them with compressed air.
2. Remove any gasket material from the oil pump housing at relief valve, inlet pipe and outlet pipe mating surfaces.

CAUTION:

To avoid injury from flying debris when using compressed air, wear adequate eye protection (face shield or safety goggles) and do not exceed 40 psi (276 kPa) air pressure.

3. Clean the outlet and inlet pipe and screen assembly in clean fuel oil and blow dry with compressed air.

 Copyright © 2004 DETROIT DIESEL CORPORATION

4. Measure the bushing clearance in the pump body and cover.
   [a] If the shaft-to-pump cover bushing clearance exceeds 0.089 mm (0.0035 in.), replace bushing.
   [b] If the shaft-to-pump cover bushing clearance is within 0.089 mm (0.0035 in.), reuse the bushing.

NOTICE:
The use of excessively worn gears will result in low engine oil pressure that, in turn, may lead to serious engine damage.

5. Visually inspect the oil pump gear. Check to see if the gear turns freely in the pump housing.
   [a] If the gear binds, replace it with a new gear.
   [b] If the gear does not bind, reuse the gear.
6. Visually inspect gear teeth on drive shaft bushing contact areas. Check for worn contact areas on gear teeth and drive shaft.
   [a] If area is worn, replace gear and drive shaft with new parts.
   [b] If the area is not worn, reuse the parts.

3.2.4 Assembly of Oil Pump (1991 and Later Engines)

Assemble the oil pump as follows:

1. Lubricate the drive shaft bushing with clean engine oil.
2. Insert the drive shaft and gear assembly into the pump body. See Figure 3-4.
3. Position the oil pump assembly on a press, pump body down, supporting the drive shaft. The pump body should be free of the press bed supported by the pump gear contacting the bottom of the pump cavity.
4. Coat the bore of the drive gear with a light film of Lubriplate (or equivalent).
5. Position drive gear squarely on the end of the shaft.

(Rev. 2004) *All information subject to change without notice.*
6SE483 0401 Copyright © 2004 DETROIT DIESEL CORPORATION

6. Press the drive gear onto the shaft until a clearance of 1.00 mm (0.039 in.) is obtained between the inner face of the gear and the pump body. See Figure 3-7.

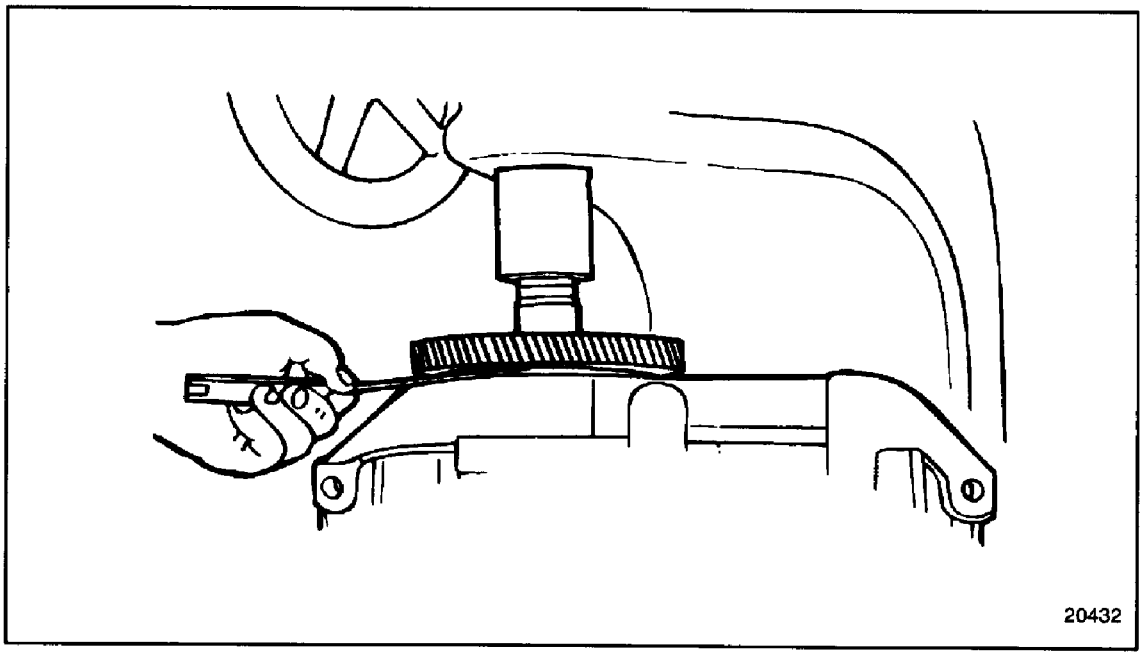

Figure 3-7 Oil Pump Drive Gear Installation

NOTE:
A minimum press load of 6.7 kN (1,515 lb) must be obtained when pressing the gear onto the shaft. When completed, an end play of 0.84-1.12 mm (0.033-0.044 in.) must be obtained.

7. Lightly coat the driven gear bushing with clean engine oil.
8. Insert the drive shaft and gear assembly into the pump body. See Figure 3-4.
9. Lightly coat both bushings in the pump cover with clean engine oil.
10. Index them with the shafts.
11. Install the four cover bolts and hand-tighten.
12. Rotate the oil pump by hand. The oil pump must turn freely without binding.

NOTICE:
The cause of oil pump binding must be corrected before installation is complete or severe engine damage may result.

13. If binding occurs, stop assembly and disassemble until the cause can be detected and corrected. Refer to section 3.2.3.
14. Torque the four cover bolts to 30-38 N·m (22-28 lb·ft).

 Copyright © 2004 DETROIT DIESEL CORPORATION

3.2.5 Assembly of Oil Pump (Pre-1991 Engines)

Assemble the oil pump as follows:

1. Lightly coat the drive shaft bushings with clean engine oil. See Figure 3-7.
2. Insert the drive shaft and gear assembly into the pump body.
3. Position the oil pump assembly on a press, pump body down, supporting the drive shaft. The pump body should be free of the press bed supported by the pump gear contacting the bottom of the pump cavity.
4. Coat the bore of the drive gear with a light film of Lubriplate (or equivalent).
5. Position drive gear squarely on the end of the shaft.
6. Press the drive shaft until a clearance of 0.38 mm (0.015 in.) is obtained between the inner face of the gear and the pump body. See Figure 3-8.

NOTE:
A minimum press load of 8.9 kN (2,000 lb) must be obtained when pressing the gear on the shaft. When completed, an end play of 0.25-0.51 mm (0.010-0.020 in.) must be obtained.

7. Lightly coat the driven gear shaft bushing with clean engine oil.
8. Insert the driven shaft and gear assembly into the pump body. See Figure 3-5.

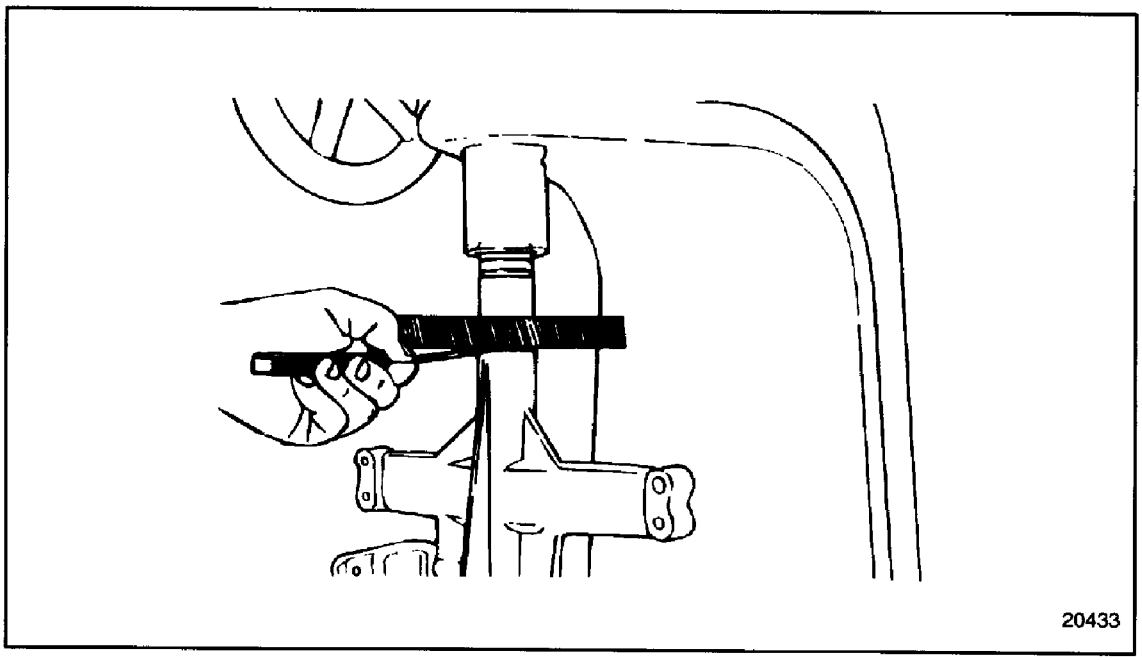

Figure 3-8 Oil Pump Drive Gear Installation (Pre-1991 Engines)

9. Lightly coat both bushings in the pump with clean engine oil.

(Rev. 2004) *All information subject to change without notice.*
6SE483 0401 Copyright © 2004 DETROIT DIESEL CORPORATION

10. Index them with the shafts.
11. Install the four cover bolts and hand-tighten.
12. Rotate the pump by hand. The oil pump must turn freely without binding.

NOTICE:
The cause of oil pump binding must be corrected before installation is complete or severe engine damage may result.

13. If binding occurs, stop assembly and disassemble until the cause can be detected and corrected. Refer to section 3.2.3.
14. Torque the four cover bolts 30-38 N·m (22-28 lb·ft).

3.2.5.1 Test Assembled Oil Pump

Test oil pump as follows:

1. Rotate the pump by hand. Check for binding.
   [a] If binding occurs, disassemble oil pump again, refer to section 3.2.3.
   [b] If no binding occurs, reuse the pump.
2. With a dial indicator mounted on the pump mounting surface, rotate the gear and check the gear run-out. The run-out specification is 0.08 mm (0.003 in.).
   [a] If run-out exceeds 0.08 mm (0.003 in.), disassemble oil pump. Refer to section 3.2.3.
   [b] If run-out is within specifications, reuse the pump.

 Copyright © 2004 DETROIT DIESEL CORPORATION

3.2.6 Installation of Oil Pump

Install the oil pump to the cylinder block as follows:

NOTICE:
If shims were used between the pump mounting feet and the engine block and a new drive gear was NOT installed, the same shims (cleaned) or the same number of new (identical) shims should be installed. If necessary, adjust shims to obtain the proper clearance between gear teeth. However, if a new drive gear has been installed, a different number of shims may be required under the mounting feet. In either case, the pump must be tightened to the cylinder block BEFORE the clearance between the gear teeth is measured. Gear lash measurements must be done with the engine in the upright position.

1. Position the oil pump on the cylinder block so that the drive gear of the oil pump meshes with the crankshaft drive gear. The two dowels in the oil pump mounting feet should be positioned in the mating holes in the cylinder block.
2. Install the four bolts through the mounting feet of the pump into the cylinder block. Torque the bolts to 58-66 N·m (43-49 lb·ft) using the torque sequence shown. See Figure 3-9.

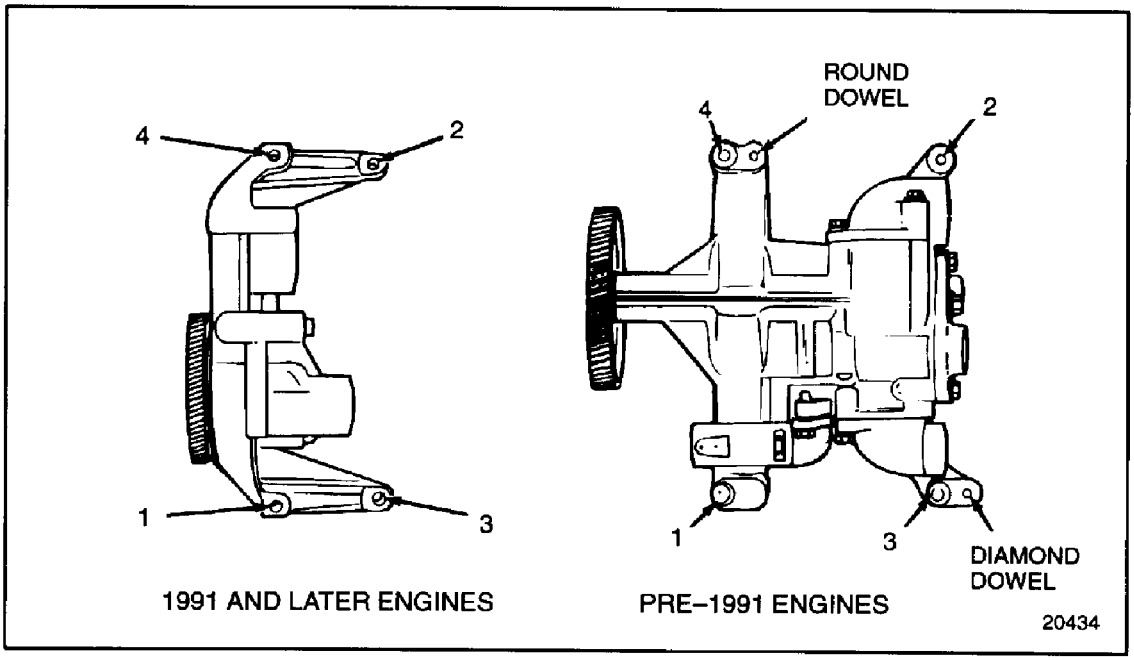

Figure 3-9 Oil Pump Bolt Torque Sequence

(Rev. 2004) *All information subject to change without notice.*
6SE483 0401 Copyright © 2004 DETROIT DIESEL CORPORATION

3. Fasten a dial indicator and magnetic base to the cylinder block so that the indicator tip rests on a tooth of the oil pump drive gear. See Figure 3-10.

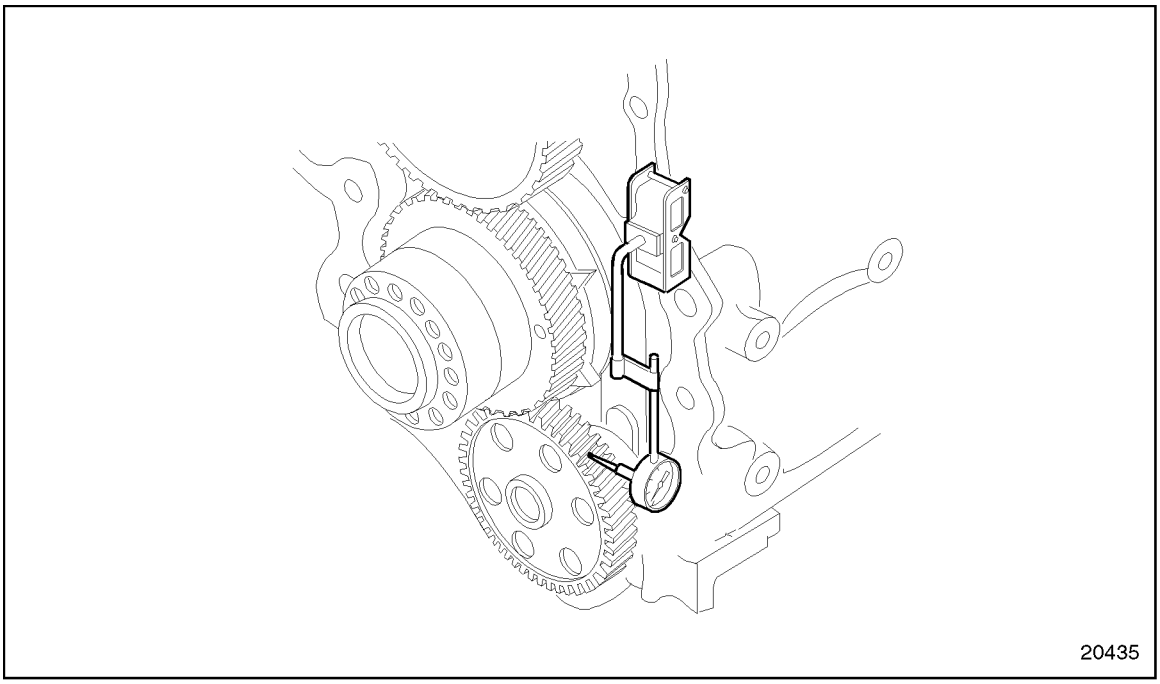

Figure 3-10 Oil Pump Drive Gear-to-Crankshaft Gear Lash Measurement

[a] Proper clearance between the crankshaft gear and the oil pump drive gear is 0.051-0.229 mm (0.002-0.009 in.).

NOTE:
This gear clearance measurement must be done with the engine in upright position. When adjusting for gear tooth clearance by installing or removing shims, the same number of shims must be changed under each foot so that the pump will always be level on the engine block.

[b] Remove or install shims as necessary to obtain proper gear lash. The insertion or removal of one 0.127 mm (0.005 in.) shim will change the gear tooth clearance by approximately 0.089 mm (0.0035 in.).

4. Install the oil pressure regulator valve to the block. Refer to section 3.3.5.
5. When attaching the pump outlet pipe to the oil pump housing and the cylinder block, none of the bolts should be tightened until all of the bolts have been started.
6. Install new gaskets and seals between the oil pump housing and outlet pipe and between the outlet pipe and cylinder block.
7. Torque the elbow-to-block bolts first then the elbow-to-pump bolts to 30-38 N·m (22-28 lb·ft).
8. Install a new gasket between the oil pump housing and pick-up tube.

 Copyright © 2004 DETROIT DIESEL CORPORATION

9. Install and torque the two bolts, with washers attached, to 30-38 N·m (22-28 lb·ft).

NOTICE:
The thru-bolts must remain loose until last, to prevent twisting the oil pick-up tube. Failure to do this could cause eventual stress-crack damage at the pick-up tube to flange joints.

10. Install and torque the two pick-up tube support bracket-to-engine block bolts to 58-73 N·m (43-54 lb·ft).
11. Torque the two thru-bolts at the inlet pipe to support bracket to 58-73 N·m (43-54 lb·ft).
12. Recheck all bolts for tightness to ensure there will be no leaks in the oil pump and pipe mounting connections.
13. Install the oil pan. Refer to section 3.11.4.
14. Fill the crankcase to the proper level with the recommended oil. Refer to section 5.2.1.
15. Refer to section 11.3 for verification of proper oil pump installation.

(Rev. 2004) *All information subject to change without notice.*
6SE483 0401 Copyright © 2004 DETROIT DIESEL CORPORATION

3.3 OIL PRESSURE REGULATOR VALVE

An oil pressure regulator valve maintains stable lubricating oil pressure within the engine, regardless of the oil temperature. Oil leaving the pump under pressure passes into the pressure relief valve body. The valve is installed in the end of a vertically drilled passage in the cylinder block, located on the oil cooler (right) side of the block, that connects with the main cylinder block oil gallery. See Figure 3-11.

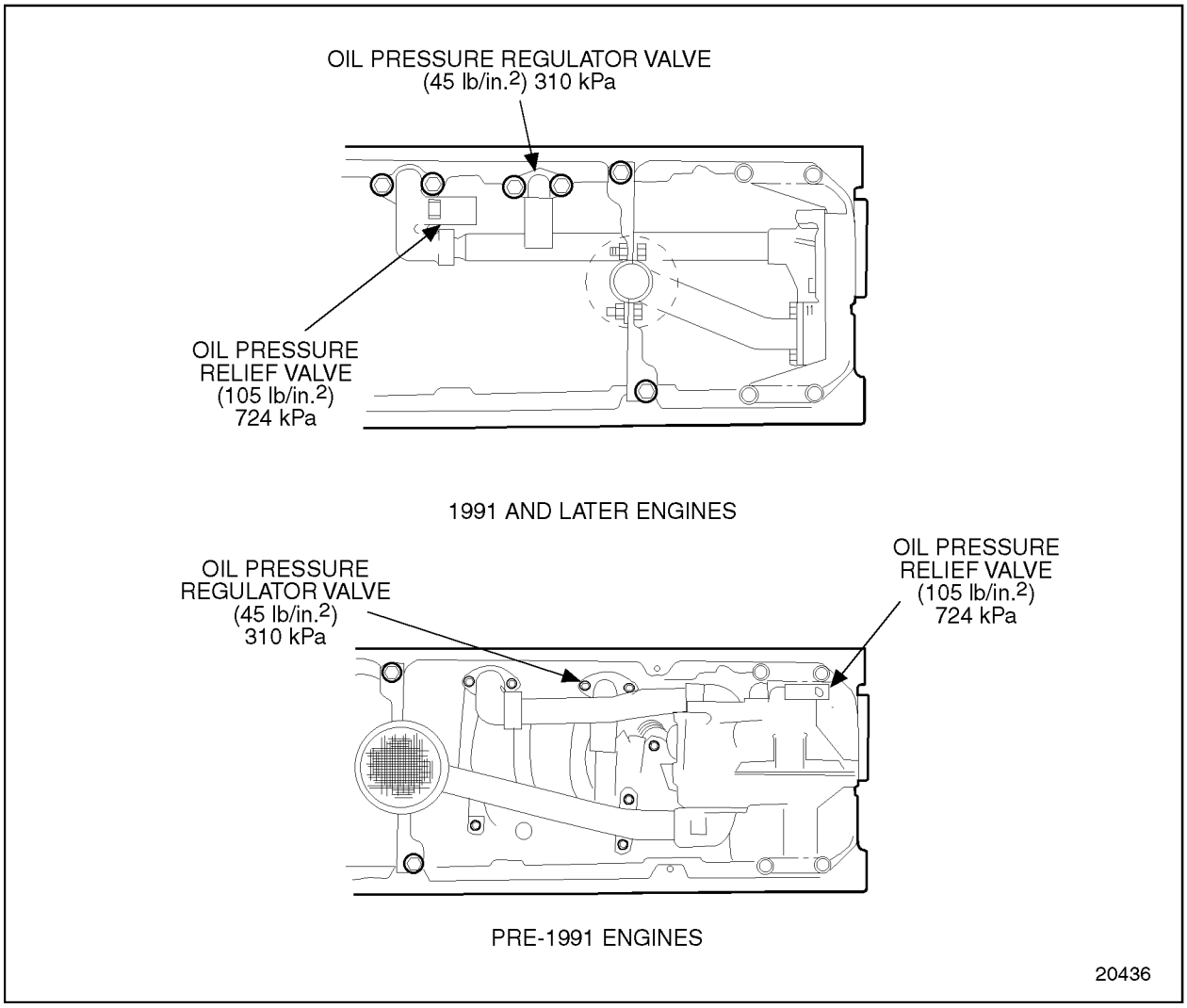

Figure 3-11 Oil Pressure Regulator Valve Mounting

 Copyright © 2004 DETROIT DIESEL CORPORATION

The oil pressure regulator valve consists of a valve body, a hollow, piston-type valve, a spring, a spring seat and a pin to retain the valve assembly within the valve body. See Figure 3-12.

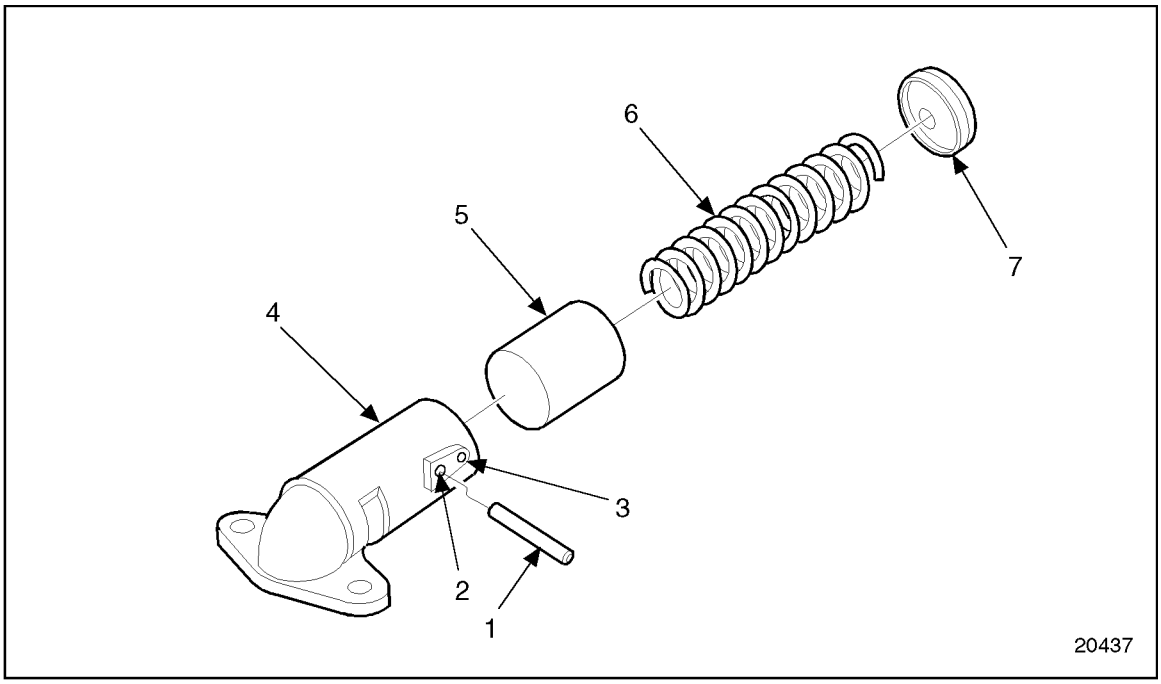

1. Pin
2. Pressure Relief Pin Location
3. Pressure Regulator Valve Pin Location
4. Valve Body
5. Valve
6. Spring
7. Spring Seat

Figure 3-12 Oil Pressure Regulator Valve Parts and Relief Valve Details

The valve is held on its seat by the spring, which is compressed by the pin in back of the spring seat. The entire assembly is bolted to the lower flange of the cylinder block and sealed against leaks by a gasket between the block and valve body. When conditions are such that the oil pressure at the valve exceeds 310 kPa (45 lb/in.^{2}), the valve begins to be forced from its seat and oil from the engine gallery is bypassed to the engine oil pan. Thus, stable lubricating oil pressure is maintained at all times.

(Rev. 2004) *All information subject to change without notice.*
6SE483 0401 Copyright © 2004 DETROIT DIESEL CORPORATION

3.3.1 Repair or Replacement of Oil Pressure Regulator Valve

To determine if repair is possible or replacement is necessary, perform the following procedure. See Figure 3-13.

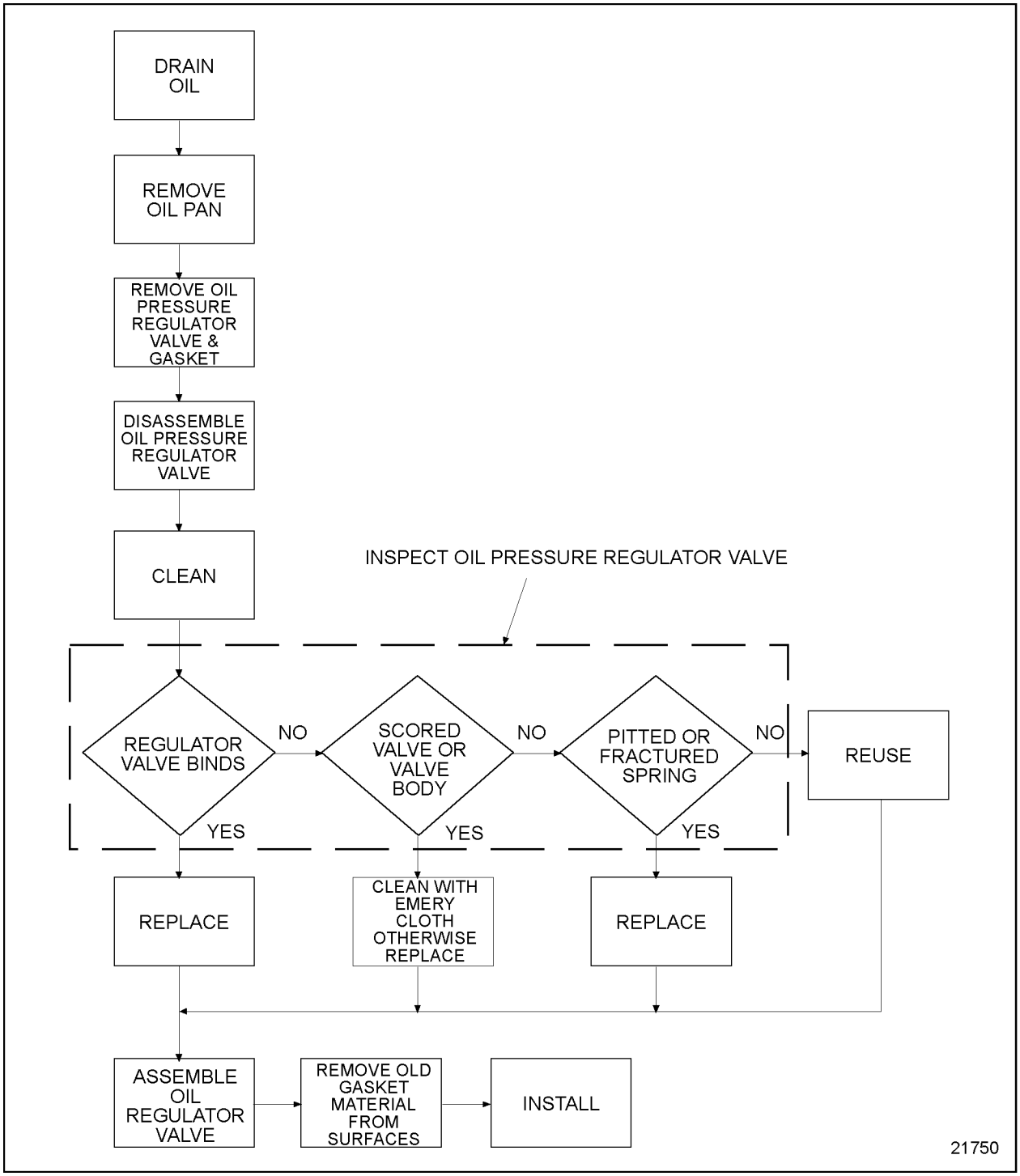

Figure 3-13 Flowchart for Repair or Replacement of Oil Pressure Regulator Valve

 Copyright © 2004 DETROIT DIESEL CORPORATION

3.3.2 Removal of Oil Pressure Regulator Valve

Remove the oil pressure regulator valve as follows:

1. Drain the lubricating oil and remove the oil pan. Refer to section 3.11.2.
2. Remove the two regulator-to-cylinder block attaching bolts and washers.
3. Tap the regulator body lightly to loosen it from the gasket and cylinder block.
4. Remove the oil pressure regulator valve and gasket.

3.3.3 Disassembly of Oil Pressure Regulator Valve

Disassemble the oil pressure regulator valve as follows:

CAUTION:

To avoid injury from flying parts when working with components under spring tension, wear adequate eye protection (face shield or safety goggles).

1. Clamp the regulator in the soft jaws of a bench vise and remove the spring seat retaining pin from the regulator body.
2. Remove the spring seat, spring and valve from the regulator body.

(Rev. 2004) *All information subject to change without notice.*
6SE483 0401 Copyright © 2004 DETROIT DIESEL CORPORATION

3.3.3.1 Inspection of Oil Pressure Regulator Valve

Inspect the oil pressure regulator valve as follows:

1. Clean all of the oil pressure regulator valve components in fuel oil.

CAUTION:

To avoid injury from flying debris when using compressed air, wear adequate eye protection (face shield or safety goggles) and do not exceed 40 psi (276 kPa) air pressure.

2. Dry the components with compressed air.
3. Inspect the oil pressure regulator valve for movement. Check to see if the oil pressure regulator valve moves freely in the valve body.
   [a] If oil pressure regulator valve binds, replace it with a new part.
   [b] If oil pressure regulator valve does not bind, reuse part.
4. Inspect the components for wear or damage. Check to see if valve or the valve body are scored.
   [a] If the valve or valve body parts cannot be cleaned up with a fine emery cloth, replace with new parts.
   [b] If the valve or valve body parts can be cleaned up with a fine emery cloth, reuse parts.
5. Inspect spring for pitting or fractures.
   [a] If spring is damaged, replace it.
   [b] If spring is not damaged, reuse the component.

 Copyright © 2004 DETROIT DIESEL CORPORATION

3.3.4 Assembly of Oil Pressure Regulator Valve

Assemble the oil pressure regulator valve as follows:

1. Apply clean engine oil to the outer face of the valve. See Figure 3-14.
2. Slide valve into the regulator body, closed end first. See Figure 3-14.
3. Insert the spring in the valve and install the spring seat.
4. While compressing the spring, install the retaining pin behind the spring seat.
5. Press the pin flush to 0.254 mm (0.010 in.) below the surface of the valve body.

NOTE:
The valve body has two retaining pin holes. See Figure 3-14. Install the pin in the outermost hole for the regulator valve. The retaining pin must be positioned correctly so the proper valve opening pressure will be obtained. Although the same casting is used for both the pressure regulator and relief valves, the regulator valve has a slightly larger opening machined into the side. See Figure 3-14.

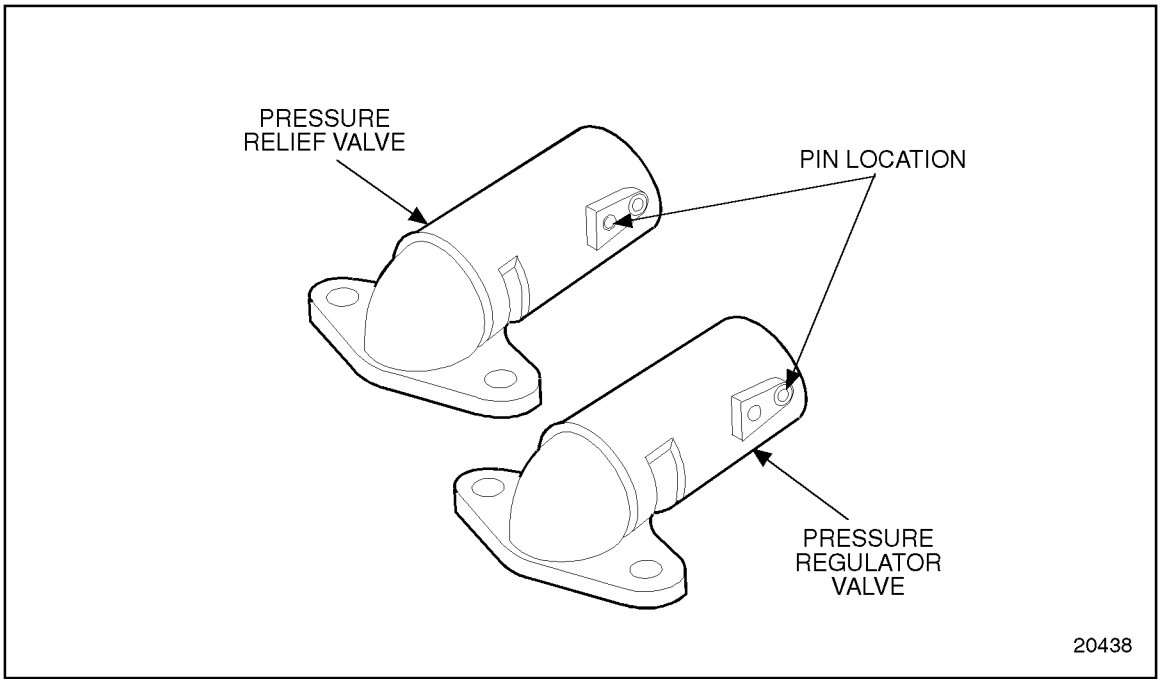

Figure 3-14 Comparison of Pressure Regulator and Relief Valve Assemblies

(Rev. 2004) *All information subject to change without notice.*
6SE483 0401 Copyright © 2004 DETROIT DIESEL CORPORATION

3.3.5 Installation of Oil Pressure Regulator Valve

Install the oil pressure regulator valve as follows:

1. Remove all traces of old gasket material from the mating surfaces of the regulator body and the cylinder block.
2. Secure the oil pressure regulator valve assembly to the cylinder block with two bolts. Torque the bolts to 30-38 N·m (22-28 lb·ft).
3. Refer to section 11.3 for verification of proper oil pressure regulator installation.

 Copyright © 2004 DETROIT DIESEL CORPORATION

3.4 OIL PRESSURE RELIEF VALVE

Oil leaving the pump under pressure passes into the pressure relief valve body. The spring-loaded valve opens when the pressure exceeds 724 kPa (105 lb/in.^{2}) and directs the excess oil to the oil pan. The pressure relief valve is attached to the oil pump outlet tube (on 1991 and later engines), or the oil pump body (on pre-1991 engines). See Figure 3-11.

The pressure relief valve consists of a valve body, a hollow, piston-type valve, a spring, spring seat and a pin to retain the valve assembly within the valve body.

The relief valve assembly is composed of the same parts as the regulator valve assembly with the exception of the body. See Figure 3-12.

The valve is held on its seat by the spring, which is compressed by the pin in back of the spring seat. The entire assembly is bolted to the lower flange of the cylinder block and sealed against leaks by a gasket between the block and valve body. When conditions are such that the oil pressure at the valve exceeds 689 kPa (100 lb/in.^{2}), the valve begins to be forced from its seat and oil from the engine gallery is bypassed to the engine oil pan. Thus, stable lubricating oil pressure is maintained at all times.

(Rev. 2004) *All information subject to change without notice.*
6SE483 0401 Copyright © 2004 DETROIT DIESEL CORPORATION

3.4.1 Repair or Replacement of Oil Pressure Relief Valve

To determine if repair is possible or replacement is necessary, perform the following procedure. See Figure 3-15.

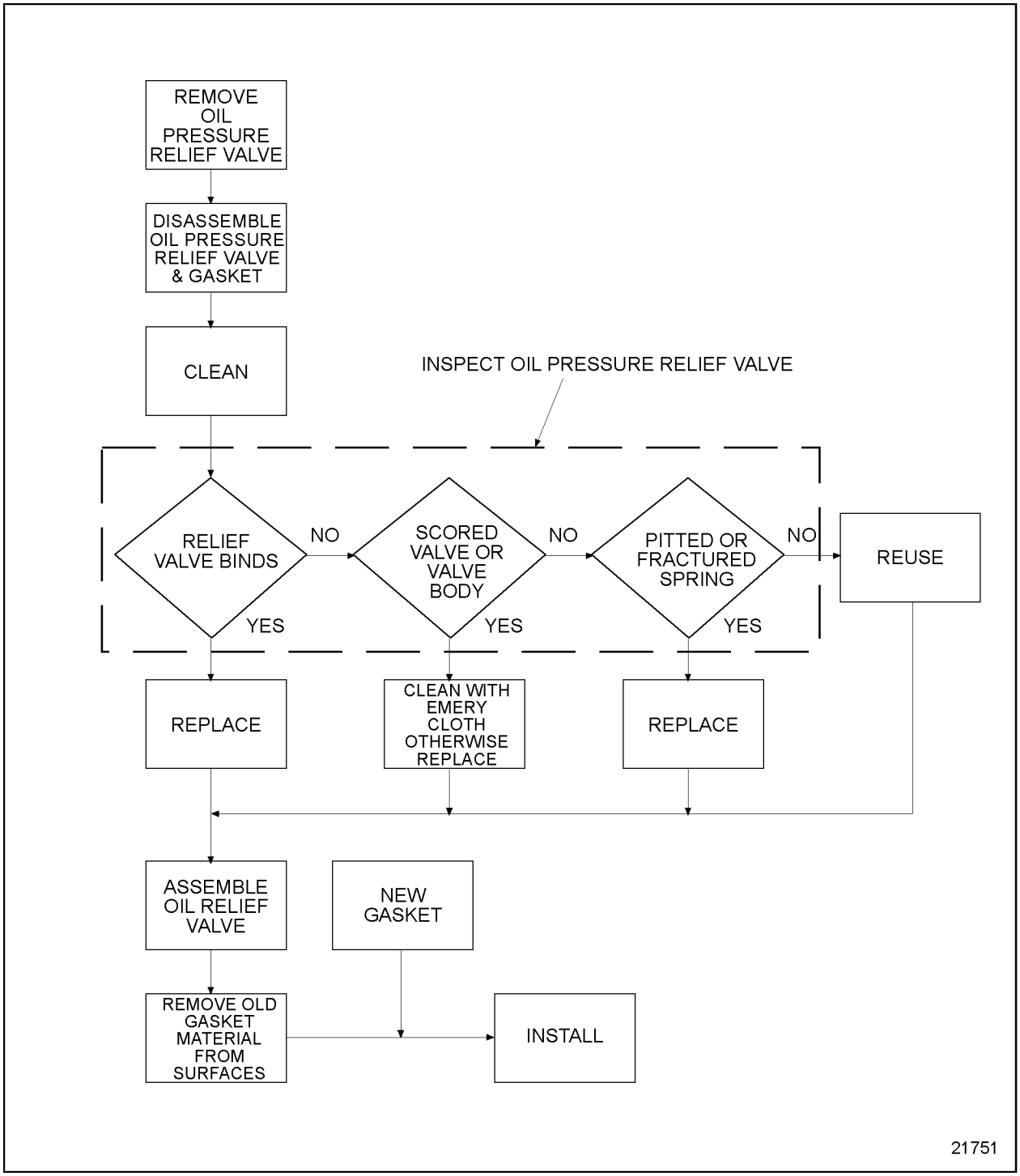

Figure 3-15 Flowchart for Repair or Replacement of Oil Pressure Relief Valve

 Copyright © 2004 DETROIT DIESEL CORPORATION

3.4.2 Removal and Cleaning of Oil Pressure Relief Valve

Remove the oil pressure relief valve as follows:

1. Remove the two bolts and washers securing the relief valve to the cylinder block.
2. Tap the oil pressure relief valve body lightly to loosen it from the gasket and cylinder block.
3. Remove the oil pressure relief valve and gasket.

3.4.3 Disassembly of Oil Pressure Relief Valve

Disassemble the oil pressure relief valve as follows:

1. Clamp the oil pressure relief valve in the soft jaws of a bench vise.

CAUTION:

To avoid injury from flying parts when working with components under spring tension, wear adequate eye protection (face shield or safety goggles).

2. Remove the spring seat retaining pin from the oil pressure relief valve body. See Figure 3-12.
3. Remove the spring seat, spring and valve from the oil pressure relief valve body. See Figure 3-12.

3.4.4 Cleaning the Oil Pressure Relief Valve

Perform the following steps to clean the oil pressure relief valve:

1. Clean all of the oil pressure relief valve components in fuel oil.

CAUTION:

To avoid injury from flying debris when using compressed air, wear adequate eye protection (face shield or safety goggles) and do not exceed 40 psi (276 kPa) air pressure.

2. Dry the components with compressed air.

(Rev. 2004) *All information subject to change without notice.*
6SE483 0401 Copyright © 2004 DETROIT DIESEL CORPORATION

3.4.4.1 Inspection of Oil Pressure Relief Valve

Inspect the oil pressure relief valve as follows:

1. Inspect the oil pressure relief valve for movement. Check to see if the oil pressure relief valve moves freely in the valve body.
   [a] If relief valve binds, replace it with a new part.
   [b] If relief valve did not bind, reuse the component.
2. Inspect the components for wear or damage. Check to see if valve or the valve body are scored.
   [a] If the valve and valve body parts cannot be cleaned with a fine emery cloth, replace with new parts.
   [b] If the valve and valve body parts can be cleaned with a fine emery cloth, reuse the parts.
3. Inspect spring for pitting or fractures.
   [a] If spring is damaged, replace the component.
   [b] If spring is not damaged, reuse the component.

 Copyright © 2004 DETROIT DIESEL CORPORATION

3.4.5 Assembly of Oil Pressure Relief Valve

The oil pressure relief valve body has two retaining pin holes. See Figure 3-16. Install the pin in the outermost hole for the regulator valve.

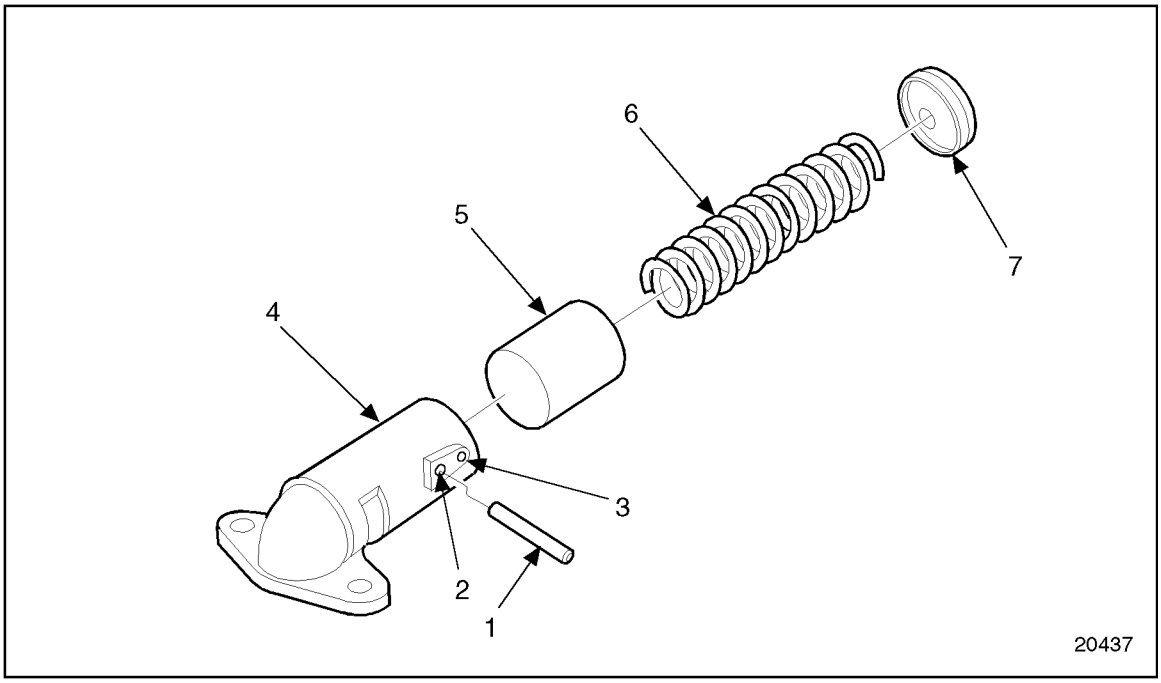

1. Pin
2. Pressure Relief Pin Location
3. Pressure Regulator Valve Pin Location
4. Valve Body
5. Valve
6. Spring
7. Spring Seat

Figure 3-16 Location of Oil Pressure Regulator Valve and Relief Valve Pin

(Rev. 2004) *All information subject to change without notice.*
6SE483 0401 Copyright © 2004 DETROIT DIESEL CORPORATION

Assemble the relief valve as follows:

1. Apply clean engine oil to the outer face of the valve.
2. Slide valve into the oil pressure regulator body, closed end first. See Figure 3-16.
3. Insert the spring in the valve and install the spring seat.

NOTICE:
The retaining pin must be positioned correctly so the proper valve opening pressure will be obtained. Although the same casting is used for both the pressure regulator and relief valves, the regulator valve has a slightly larger opening machined into the side. See Figure 3-16.

4. While compressing the spring, install the retaining pin behind the spring seat.
5. Press the pin flush to 0.254 mm (0.010 in.) below the surface of the valve body.

3.4.6 Installation of Oil Pressure Relief Valve

Install the oil pressure relief valve as follows:

1. Remove all traces of old gasket material from the mating surfaces of the oil pressure relief valve body and the cylinder block.
2. Place a new gasket onto the relief valve body.
3. Secure the oil pressure relief valve assembly to the cylinder block with two bolts. Torque the bolts to 30-38 N·m (22-28 lb·ft).
4. Refer to section 11.3 for verification of proper oil pressure relief valve installation.

 Copyright © 2004 DETROIT DIESEL CORPORATION

3.5 OIL FILTER

Two full-flow type lubricating oil filters are used on current Series 60 engines. The oil filters are mounted in a downward position. The filters are throw away, spin-on type. Prior to 1993 the Series 60 engines also had a bypass filter. See Figure 3-18.

NOTE:
Certain pleasure craft marine engines use a single, high capacity, remote-mounted lubricating oil filter. When installed, adaptor plates drilled and tapped for hose connections are used to seal the spin-on filter openings in the engine-mounted oil filter adaptor. See Figure 3-17.

(Rev. 2004) *All information subject to change without notice.*
6SE483 0401 Copyright © 2004 DETROIT DIESEL CORPORATION

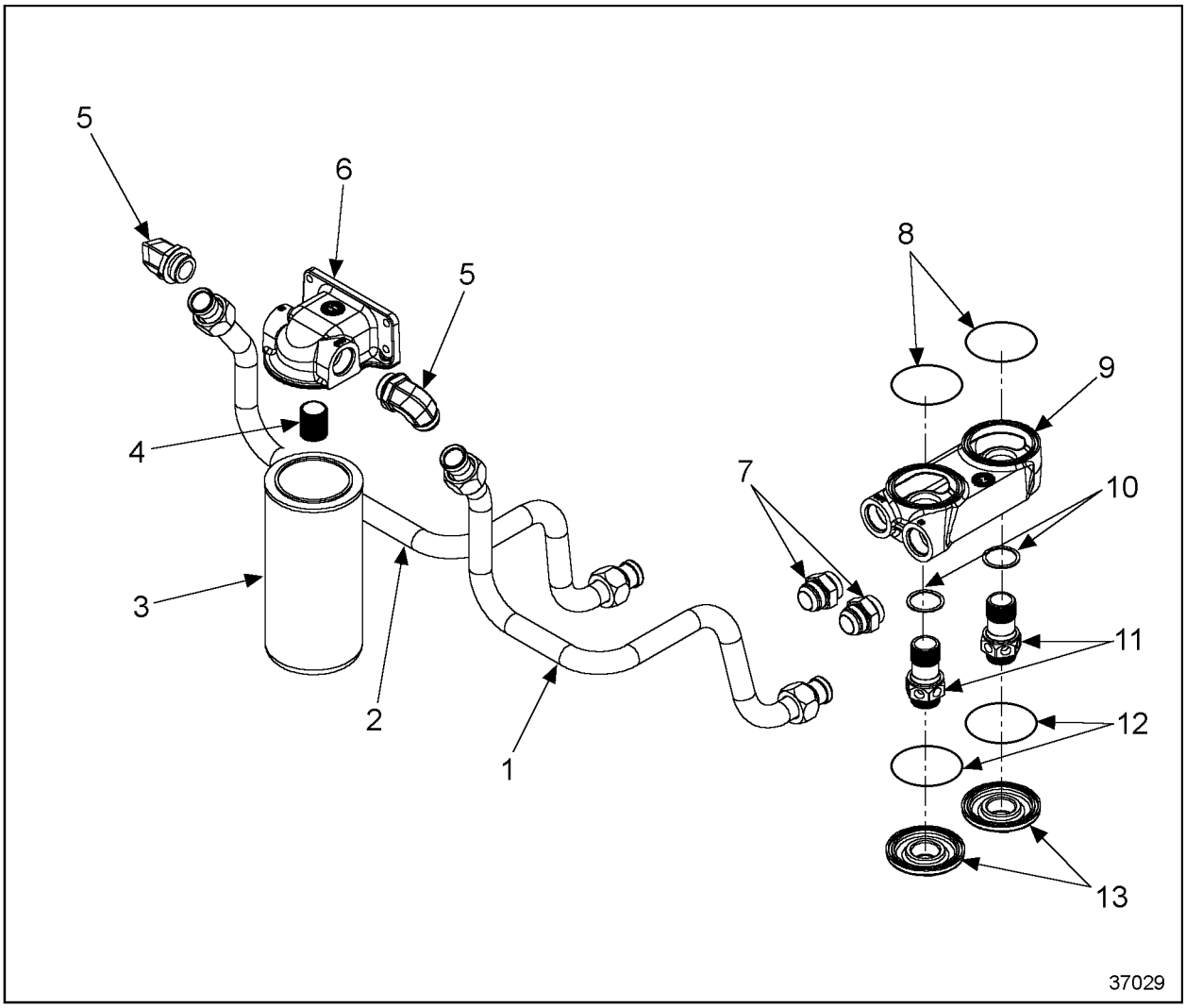

1. Lube Oil Return Tube
2. Lube Oil Supply Tube
3. Spin-on Lube Oil Filter
4. Filter Adaptor Insert
5. Elbow
6. Spin-on Lube Oil Filter Adaptor
7. Connector (2)
8. Adaptor-to-Oil Cooler Seal Ring (2)
9. Remote-mounted Filter Adaptor
10. Seal Washer (2)
11. Remote-mounted Adaptor Special Stud
12. Adaptor Cap Seal Ring (2)
13. Cap (2)

Figure 3-17 Remote-mounted Lubricating Oil FIlter

 Copyright © 2004 DETROIT DIESEL CORPORATION

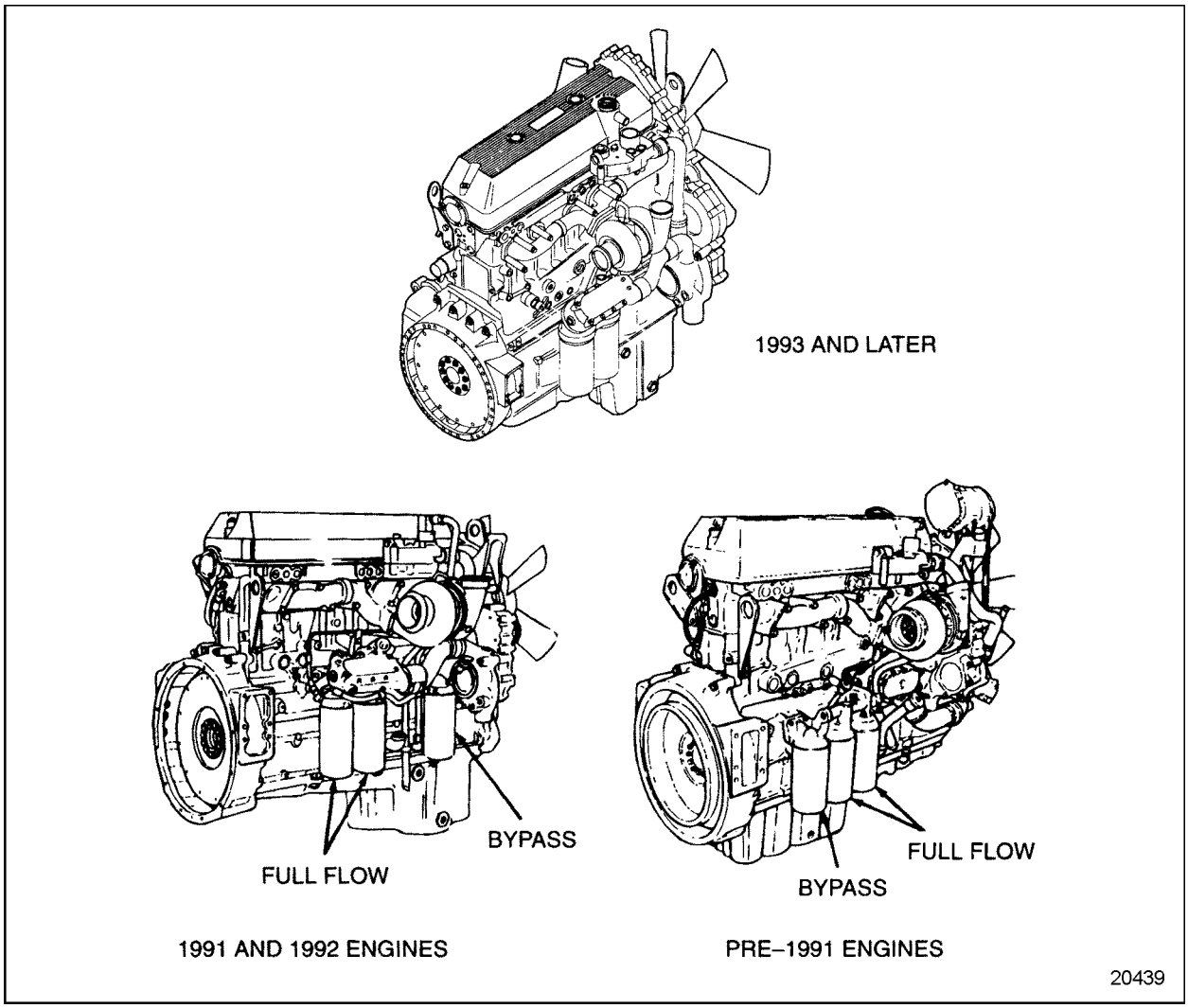

Figure 3-18 Spin-on Oil Filters

Oil supplied by the engine oil pump passes through the full-flow filters before reaching the various moving parts of the engine. The oil is forced by pump pressure through a passage in the filter adaptor and into the elements. Impurities are filtered out as the oil passes through the elements and out through another passage in the filter adaptor.

(Rev. 2004) *All information subject to change without notice.*
6SE483 0401 Copyright © 2004 DETROIT DIESEL CORPORATION

3.5.1 Replacement of Oil Filter

Install new, full-flow, spin-on oil filters at the following (maximum) intervals or each time the engine oil is changed, whichever comes first:

- ☐ Truck and Parlor Coach — 15,000 Miles (24,000 Km)
- ☐ Transit Coach — 6,000 Miles (9,600 Km)
- ☐ Industrial, Agricultural, Generator Set — 150 Hours or one year, whichever comes first
- ☐ Marine — 250 Hours, or one year, whichever comes first

3.5.2 Installation of Oil Filter

Install oil filter as follows:

1. Fill new oil filters with clean engine oil and lightly coat the filter seal.
2. Install new filters onto the adaptors, turning them until they contact the gasket fully with no side movement. Then turn an additional 2/3 turn by hand or as indicated on the filter.

⚠ CAUTION:

Diesel engine exhaust and some of its constituents are known to the State of California to cause cancer, birth defects, and other reproductive harm.

- ☐ **Always start and operate an engine in a well ventilated area.**
- ☐ **If operating an engine in an enclosed area, vent the exhaust to the outside.**
- ☐ **Do not modify or tamper with the exhaust system or emission control system.**

3. Start the engine and check for oil leaks.

Make a visual inspection of all lubricating oil lines for wear and/or chafing. If any indication of wear is evident, replace the oil lines and correct the cause.

If the engine has not been operated for a prolonged period or the turbocharger has been removed or replaced, prelubricate the turbocharger. Refer to section 6.6.6.

 Copyright © 2004 DETROIT DIESEL CORPORATION

3.6 OIL FILTER ADAPTOR

The oil filter adaptor is located on the right side of the engine and is attached to the oil cooler.

The 1991 and later engines have a separate oil filter bypass adaptor. See Figure 3-19.

(Rev. 2004) *All information subject to change without notice.*
6SE483 0401 Copyright © 2004 DETROIT DIESEL CORPORATION

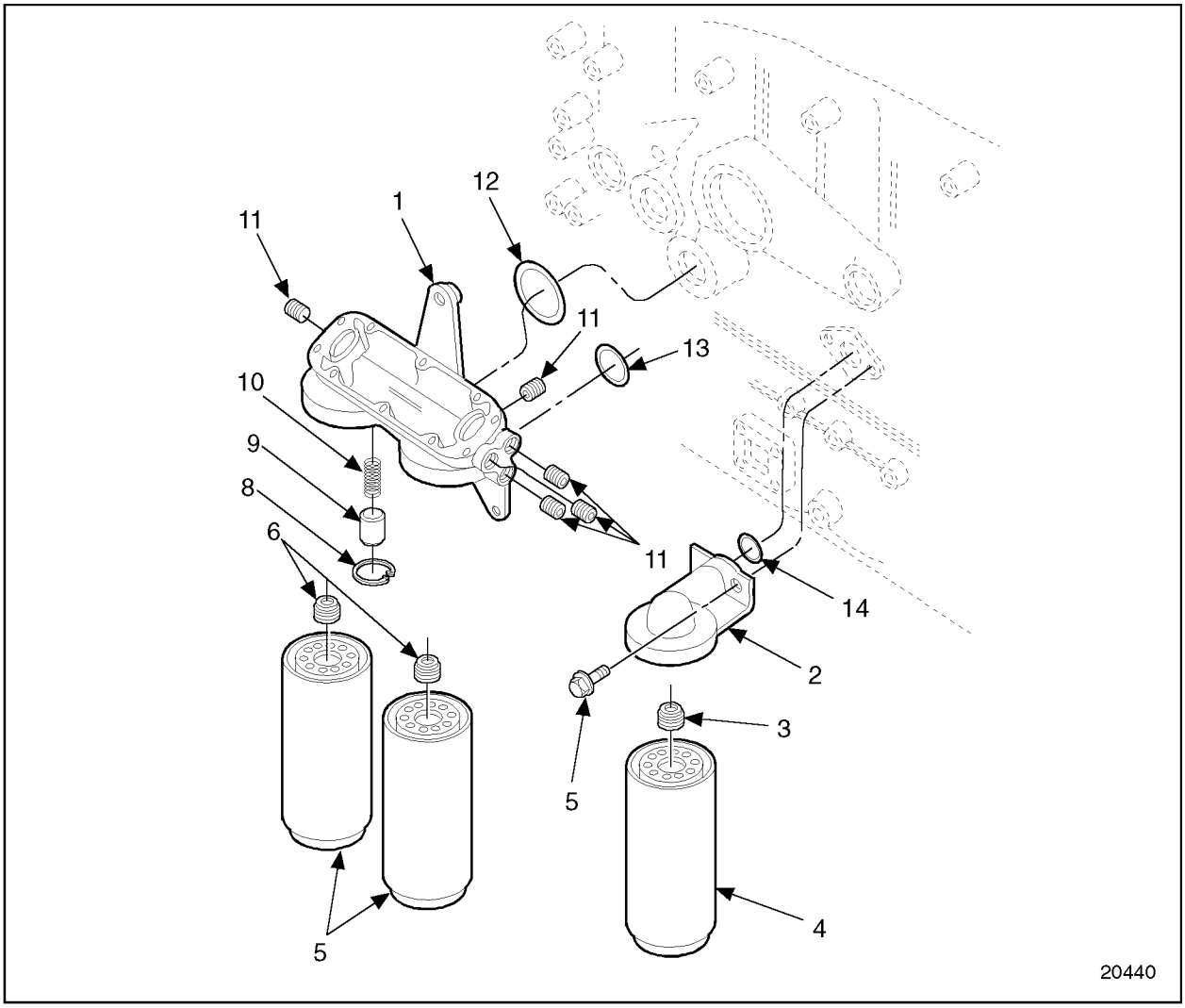

1. Oil Filter Adaptor
2. Bypass Oil Filter Adaptor*
3. Insert, Bypass Filter-to-Adaptor*
4. Oil Filter, Bypass*
5. Bolt, Adaptors-to-Block (6)*
6. Insert, Full-Flow Filter-to-Adaptor
7. Oil Filter, Full-Flow
8. Snap Ring
9. Valve, Bypass
10. Spring, Bypass
11. Pipe Plugs (5)
12. O-ring, Adaptor-to-Block
13. O-ring, Adaptor-to-Block
14. O-ring, Adaptor-to-Block*

*Not used after 1992.

Figure 3-19 Oil Filter Adaptors, Bypass Valve and Related Parts (1992 & Later)

A bypass valve in the filter adaptor opens at approximately 124-145 kPa (18-21 lb/in.^{2}) pressure differential, and will bypass the oil should the full-flow filters become plugged.

 Copyright © 2004 DETROIT DIESEL CORPORATION

3.6.1 Repair or Replacement of Oil Filter Adaptor

To determine if repair is possible or replacement is necessary, perform the following procedure. See Figure 3-20.

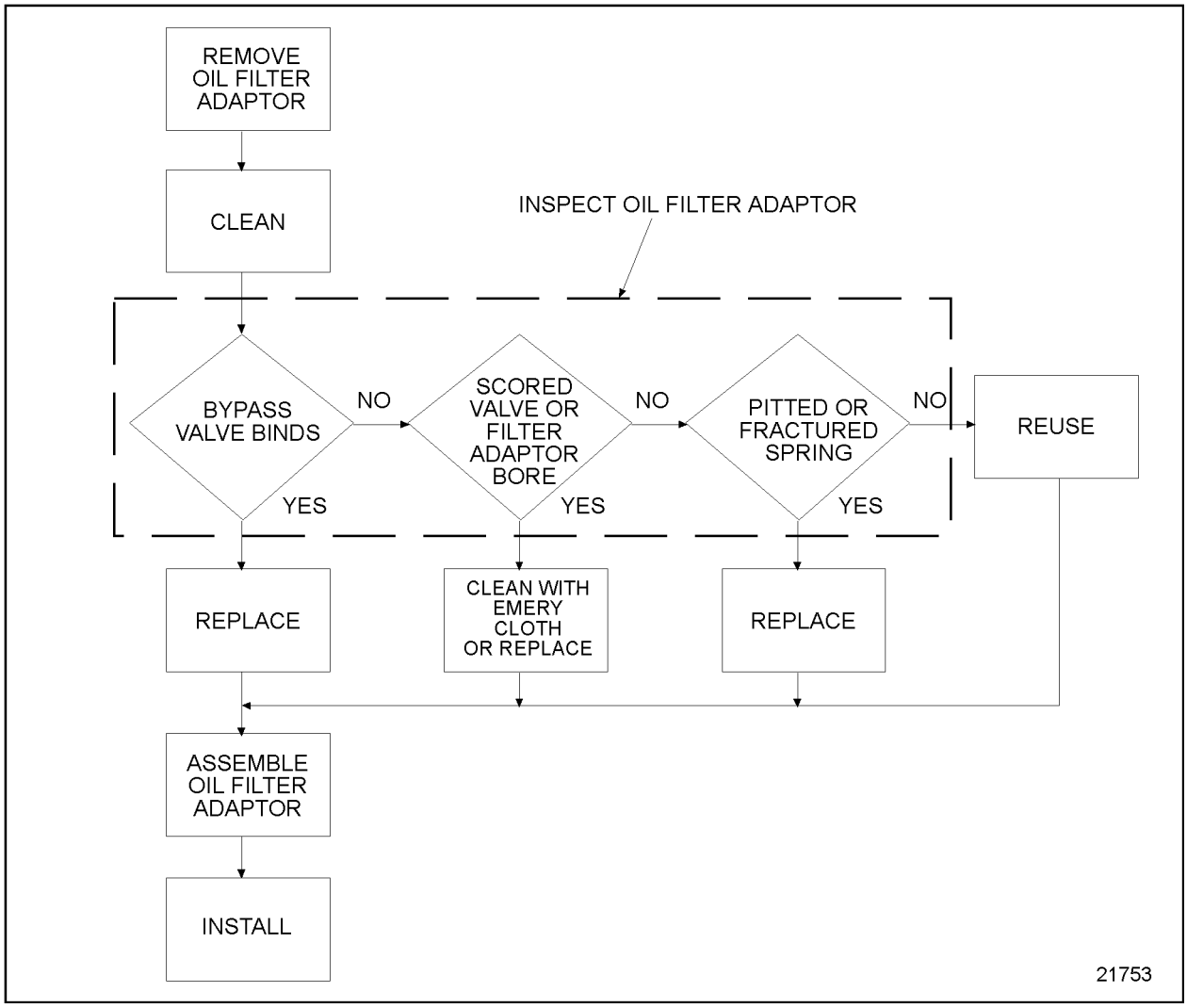

Figure 3-20 Flowchart for Repair or Replacement of Oil Filter Adaptor

(Rev. 2004) *All information subject to change without notice.*
6SE483 0401 Copyright © 2004 DETROIT DIESEL CORPORATION

3.6.2 Removal of Oil Filter Adaptor

Precleaning is not necessary.

Remove the oil filter adaptor as follows:

CAUTION:

To avoid injury from flying parts when working with components under spring tension, wear adequate eye protection (face shield or safety goggles).

1. Remove the snap ring, using J 23432.
2. Withdraw the spring and bypass valve (engines built prior to 1993). See Figure 3-19.
3. Remove the pipe plugs.

3.6.3 Cleaning the Oil Filter Adaptor

Clean the oil filter adaptor as follows:

1. Clean all of the oil filter adaptor components in fuel oil.

CAUTION:

To avoid injury from flying debris when using compressed air, wear adequate eye protection (face shield or safety goggles) and do not exceed 40 psi (276 kPa) air pressure.

2. Dry the parts with compressed air.

 Copyright © 2004 DETROIT DIESEL CORPORATION

3.6.3.1 Inspection of Oil Filter Adaptor

Inspect the oil filter adaptor as follows:

1. Inspect the bypass valve for movement. Check to see if the bypass valve moves freely in the adaptor.
   [a] If the bypass valve binds, replace it with a new part.
   [b] If the bypass valve does not bind, reuse the part.
2. Inspect the components for wear or damage. Check to see if the valve or the filter adaptor bore are scored.
   [a] If the valve and the filter adaptor bore parts cannot be cleaned with a fine emery cloth, replace with new parts.
   [b] If the valve and the filter adaptor bore parts can be cleaned with a fine emery cloth, reuse the parts.
3. Inspect the spring for damage. Check for pitting or fractures.
   [a] If spring is damaged, replace the component.
   [b] If spring is not damaged, reuse the component.

3.6.4 Assembly of Oil Filter Adaptor

Assemble the oil filter adaptor as follows:

1. Install bypass spring and bypass valve into the oil filter adaptor.
2. Install snap ring using J 23432.
3. Install oil filter adaptor inserts, if removed.
4. Install the pipe plugs:
   [a] Apply a sealant such as, Loctite® 620, (or equivalent) to the threads that will engage the adaptor.
   [b] Wipe off any sealant remaining exposed on the threads.
   [c] Torque all three pipe plugs to 129-161 N·m (95-119 lb·ft).
5. Coat new O-rings with petroleum jelly.
6. Install the O-rings in the recesses in the oil filter adaptor.

(Rev. 2004) *All information subject to change without notice.*
6SE483 0401 Copyright © 2004 DETROIT DIESEL CORPORATION

3.6.5 Installation of Oil Filter Adaptor

Install oil filter adaptor as follows:

NOTICE:

Failure to tighten oil filter adaptor mounting bolts to the required torque may lead to a loss of lubricating oil during engine operation. Inadequate lubrication can result in severe engine damage.

CAUTION:

To avoid injury from fire, contain and eliminate leaks of flammable fluids as they occur. Failure to eliminate leaks could result in fire.

1. Install the oil filter adaptor to the cylinder block and fasten as follows:
   [a] Torque the four M10 mounting bolts on current two-element oil filter adaptor to 58-73 N·m (43-54 lb·ft).
   [b] Torque the six M8 mounting bolts on former three-element oil filter adaptor to 30-38 N·m (22-28 lb·ft).
2. Install full-flow oil filter(s). Refer to section 13.13.13.
3. Refer to section 11.3 for verification of proper oil filter adaptor installation.

 Copyright © 2004 DETROIT DIESEL CORPORATION

3.7 THERMATIC OIL CONTROL VALVE

A dual spin-on lube oil filter adaptor assembly with a temperature-sensitive thermatic oil control valve is available on Series 60, 11.1L low compression (15:1) industrial and automotive engines and certain 12.7L engines. See Figure 3-21.

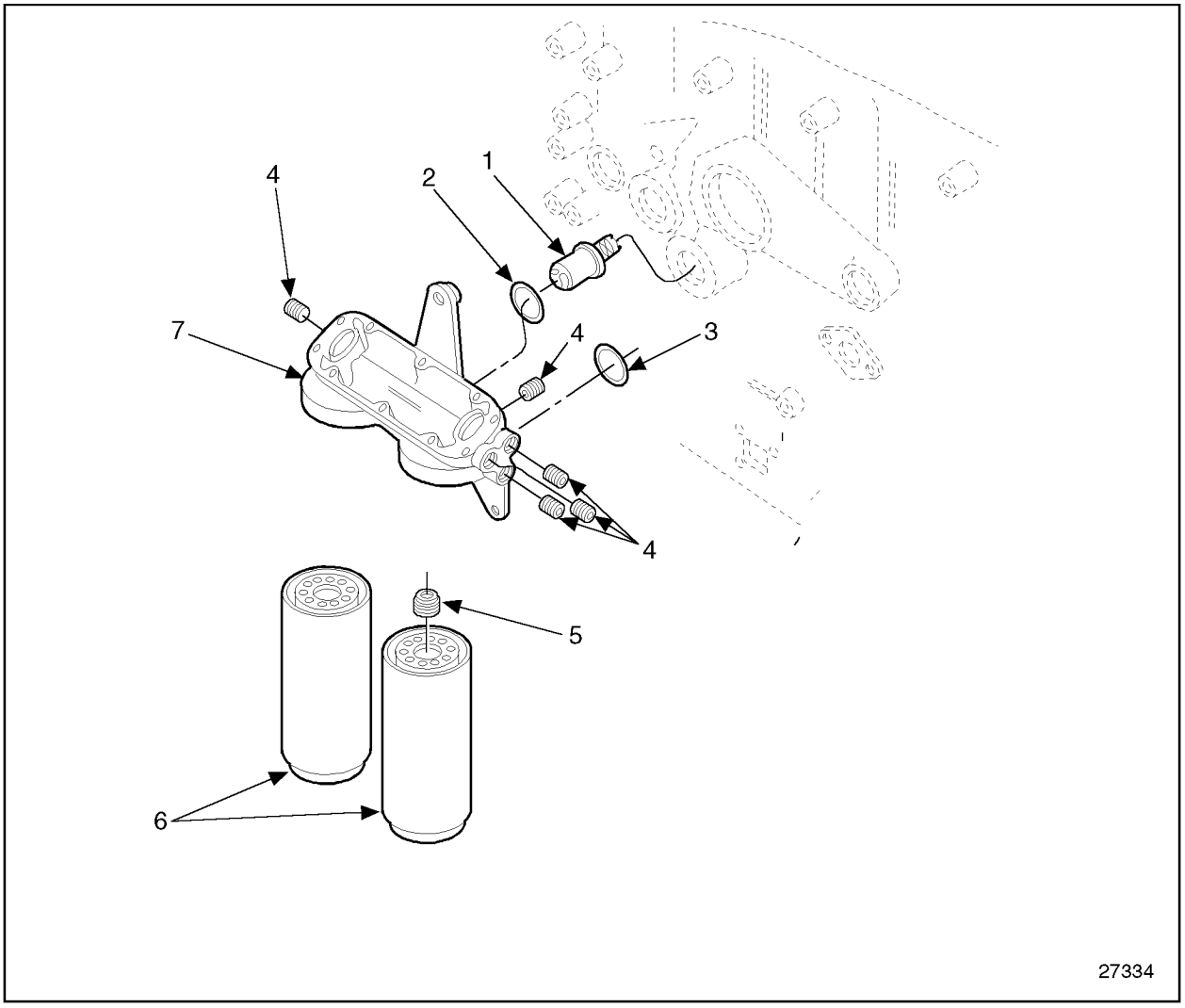

1. Thermatic Oil Control Valve
2. O-ring, Adaptor to Block
3. O-ring, Adaptor to Block
4. Pipe Plugs (5)
5. Insert, Full-Flow to Adaptor
6. Oil Filter, Full-Flow (2)
7. Oil Filter Adaptor

Figure 3-21 Thermatic Oil Control Valve

(Rev. 2004) *All information subject to change without notice.*
6SE483 0401 Copyright © 2004 DETROIT DIESEL CORPORATION

The thermatic oil control valve is installed in the oil filter adaptor assembly where it operates like a thermostat to control the flow of lube oil through the engine and oil cooler. The thermatic oil control valve operates in the following manner: See Figure 3-22.

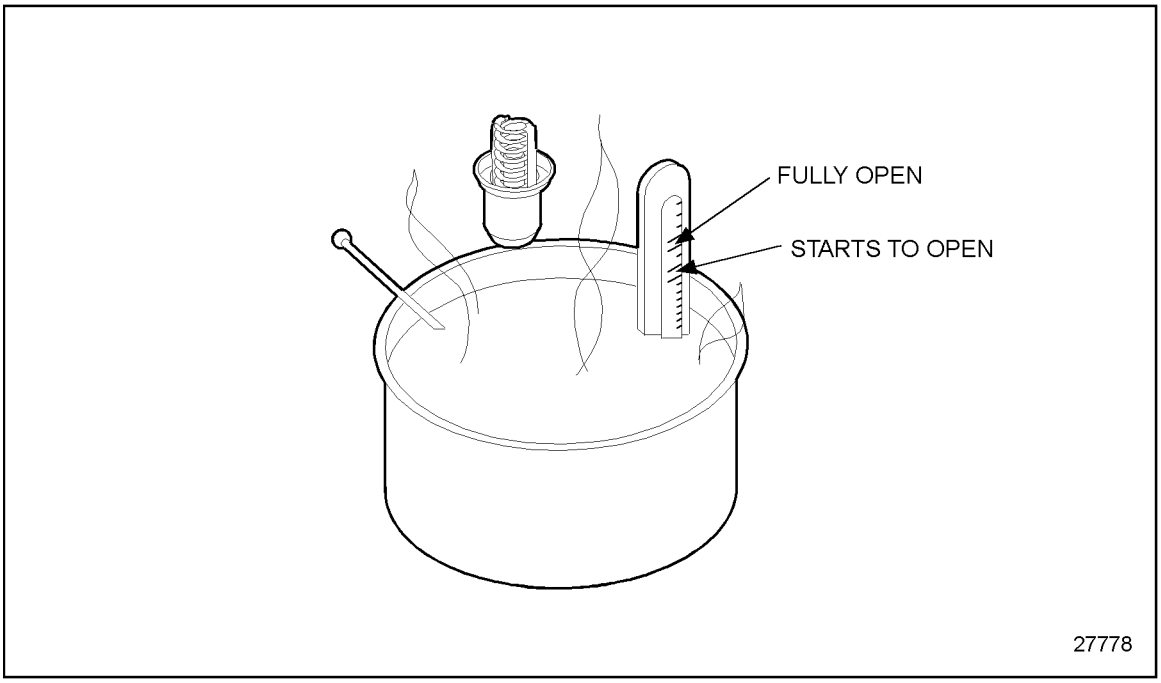

Figure 3-22 Thermatic Oil Control Valve Operation

At lube oil temperature below 104°C (220°F) the thermatic oil valve stays in the bypass mode. Filtered engine oil bypasses the oil cooler and flows directly to the main oil gallery. With no oil passing through the oil cooler, engine oil warms up rapidly. When oil temperature is between 104° -108°C (220° -227°F) the thermatic oil valve begins to open. The valve senses oil temperature and modulates oil both through and around the oil cooler. At oil temperatures of 114°C (237°F) the thermatic oil valve is fully open, and all oil flows through the oil cooler. To test the valve refer to section3.7.2.2.

Use of the thermatic oil control valve allows the engine lube oil to reach its normal temperature range quickly, reducing the amount of time during which the engine operates on heavier cold engine lube oil. During light load engine operation, the thermatic valve keeps the oil within the proper temperature range for optimum lubrication. By maintaining the engine oil temperature within the 104° -114°C (220° -237°F) range, friction and pumping losses are minimized, resulting in more efficient engine operation.

 Copyright © 2004 DETROIT DIESEL CORPORATION

3.7.1 Repair or Replacement of Thermatic Oil Control Valve

To determine if repair is possible or replacement is necessary, perform the following procedure. See Figure 3-23.

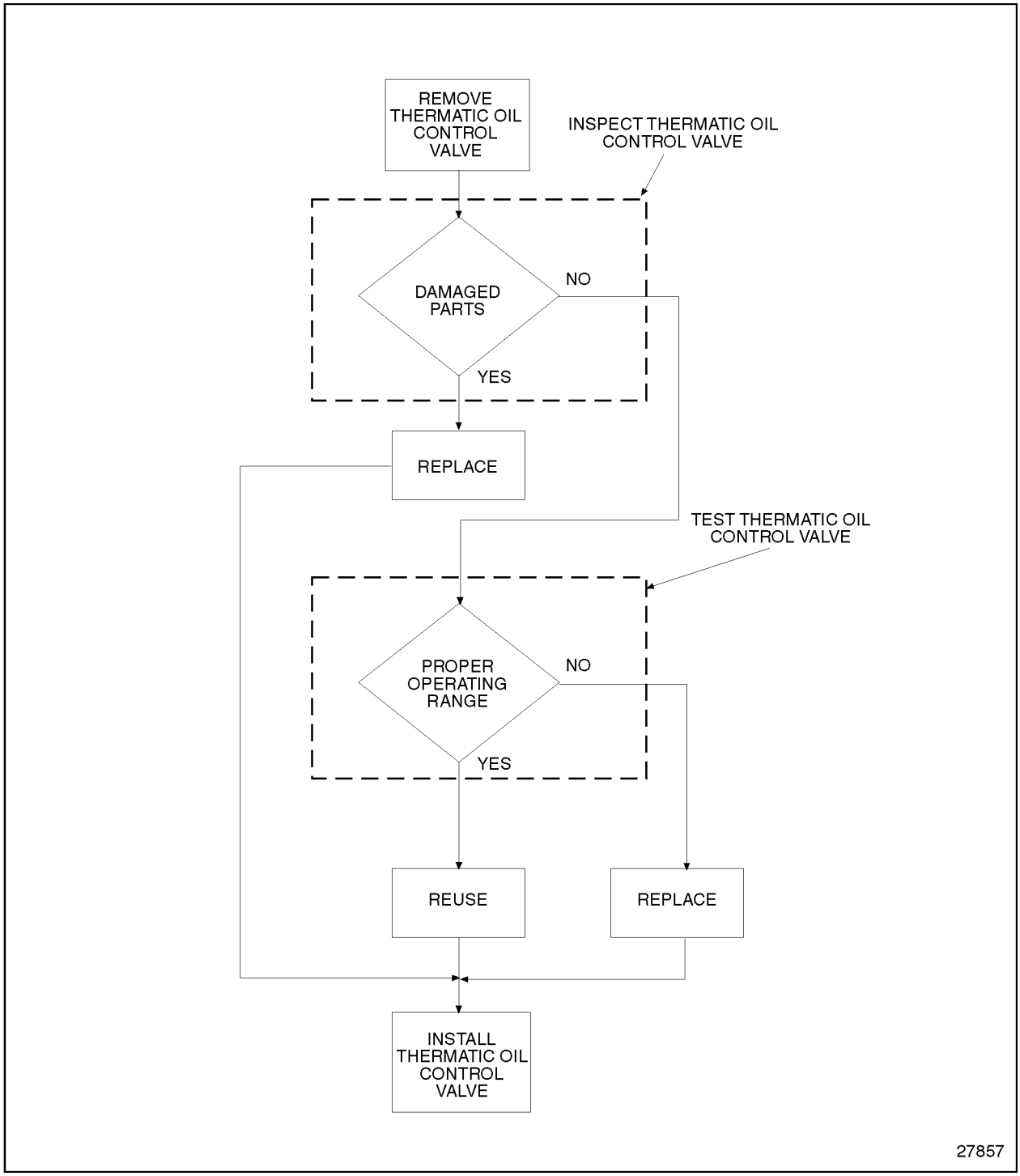

Figure 3-23 Flowchart for Repair or Replacement of Thermatic Oil Control Valve

(Rev. 2004) *All information subject to change without notice.*
6SE483 0401 Copyright © 2004 DETROIT DIESEL CORPORATION

3.7.2 Removal and Cleaning of Thermatic Oil Control Valve

Remove the thermatic oil control valve as follows:

NOTICE:

Use care when removing oil filter adaptor assembly so as not to drop thermatic oil control valve from inside of oil filter adaptor assembly, if engine is so equipped.

1. Remove the oil filter adaptor. Refer to section 3.6.2.
2. Remove the thermatic oil valve from oil filter adaptor.
3. Clean the thermatic oil control valve in clean fuel oil.

CAUTION:

To avoid injury from flying debris when using compressed air, wear adequate eye protection (face shield or safety goggles) and do not exceed 40 psi (276 kPa) air pressure.

4. Dry thermatic oil control valve with compressed air.

3.7.2.1 Inspection of Thermatic Oil Control Valve

Inspect the thermatic oil control valve as follows:

1. Inspect the thermatic oil control valve for wear or damage.
   [a] If damage is found, replace the thermatic oil control valve.
   [b] If no damage is found, reuse the thermatic oil control valve.

 Copyright © 2004 DETROIT DIESEL CORPORATION

3.7.2.2 Testing Thermatic Oil Control Valve

Check the operation of the thermatic oil control valve as follows:

NOTICE:
Ensure thermatic oil control valve is operational. If the thermatic oil control valve motion becomes impaired, engine overheating may result. An engine that has overheated may also cause the thermatic oil control valve to become inoperative. A thermatic oil control valve that does not fully open may cause overheating. A thermatic oil control valve stuck in the open position may cause poor fuel economy in cold starting conditions.

1. Immerse a thermometer and the thermatic oil control valve in a container with clean engine oil. Do not allow thermometer or thermatic oil control valve to touch the sides of the container. See Figure 3-24.

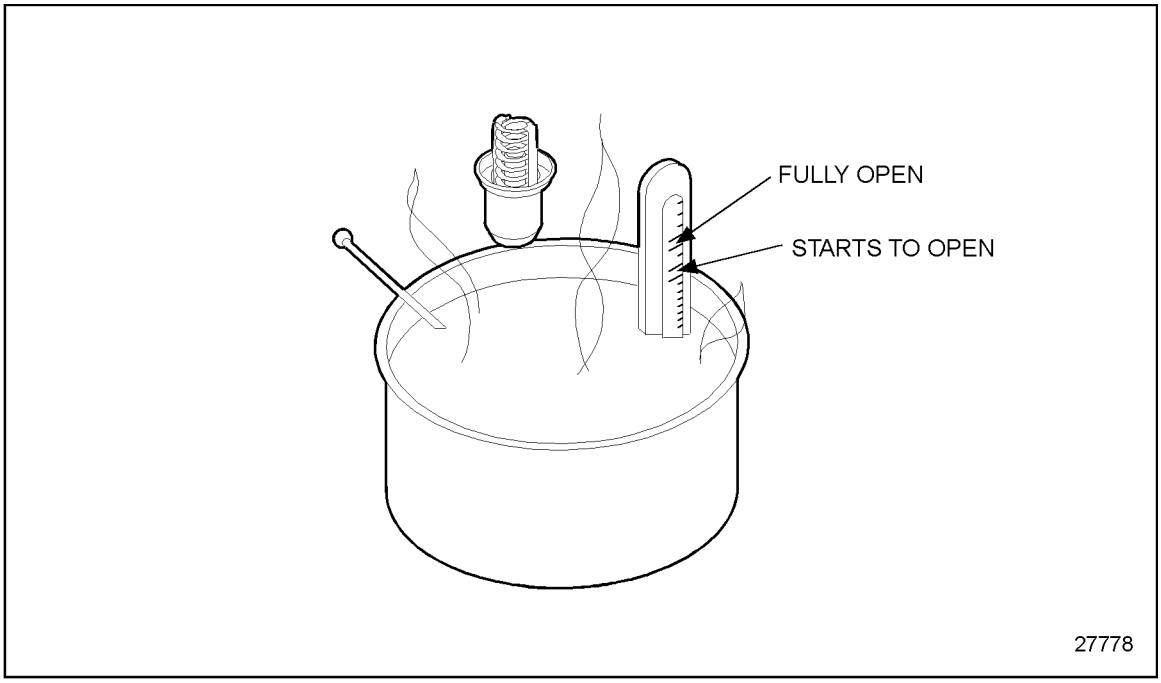

Figure 3-24 Checking Thermatic Oil Control Valve Operation

(Rev. 2004) *All information subject to change without notice.*
6SE483 0401 Copyright © 2004 DETROIT DIESEL CORPORATION

CAUTION:

To avoid injury from fire caused by heated lubricating-oil vapors:

- ☐ **Keep those people who are not directly involved in servicing away from the engine.**
- ☐ **Stop the engine immediately if an oil leak is detected.**
- ☐ **Do not allow open flames or smoke when working on an operating engine.**
- ☐ **Wear adequate protective clothing (face shield, insulated gloves, apron, etc.) to avoid burns.**
- ☐ **To prevent a buildup of potentially volatile vapors, keep the engine area well ventilated during operation.**

Lubricating oil is relatively harmless at ambient temperatures.

CAUTION:

To avoid injury from oil spray, wear adequate eye protection (face shield or safety goggles) when performing the oil test procedure.

2. While slowly agitating the clean engine oil to maintain an even temperature, apply heat to the container. Allow at least 10 minutes for the thermatic oil control valve to react before determining if it is opening at the correct temperature range.

CAUTION:

To avoid injury from scalding, use lifting tools and wear heat-resistant gloves when retrieving the thermostat from boiling water.

3. As the mixture is heated, the thermatic oil control valve should begin to open. (The normal opening temperature is stamped on the thermostat.) The start-to-open temperature range is 104-107°C (220-225°F). The thermostat is fully opened to 8.13 mm (0.320 in.) at 114°C (237°F).
4. If the thermatic oil control valve does not operate properly, replace.

 Copyright © 2004 DETROIT DIESEL CORPORATION

CAUTION:

To avoid injury from flying debris when using compressed air, wear adequate eye protection (face shield or safety goggles) and do not exceed 40 psi (276 kPa) air pressure.

5. If the thermatic oil control valve operates properly, dry with compressed air and apply a thin coat of lubricating oil to protect surfaces from corrosion.

3.7.3 Installation of Thermatic Oil Control Valve

Install the thermatic oil control valve as follows:

NOTE:
If the thermatic oil control valve dislodges from the oil filter adaptor during installation and falls to the ground, ensure valve is undamaged and is free of dirt and debris before continuing with installation.

1. Apply light coating of petroleum jelly on underside of thermatic oil control valve upper lip to aid in installation.
2. Insert beveled end of thermatic oil control valve into oil filter adaptor.
3. Install oil filter adaptor onto block. Be careful not to dislodge thermatic oil control valve from oil filter adaptor. Refer to section 3.6.4.
4. Refer to section 11.3 for verification of proper oil filter adaptor installation.

(Rev. 2004) *All information subject to change without notice.*
6SE483 0401 Copyright © 2004 DETROIT DIESEL CORPORATION

3.8 OIL COOLER (1991 AND LATER ENGINES)

To perform its functions satisfactorily, the lubricating oil must be kept within the proper temperature limits. If the oil is too cold, it will not flow freely. If the oil is too hot, it cannot support the bearing loads, and it cannot carry away enough heat. As a consequence, oil pressure may drop below acceptable limits and oil consumption may become excessive.

While performing its lubricating and cooling functions, the oil absorbs a considerable amount of heat, and this heat must be dissipated by an oil cooler.

The lubricating oil cooler is mounted on the right side of the cylinder block near the water pump. See Figure 3-25.

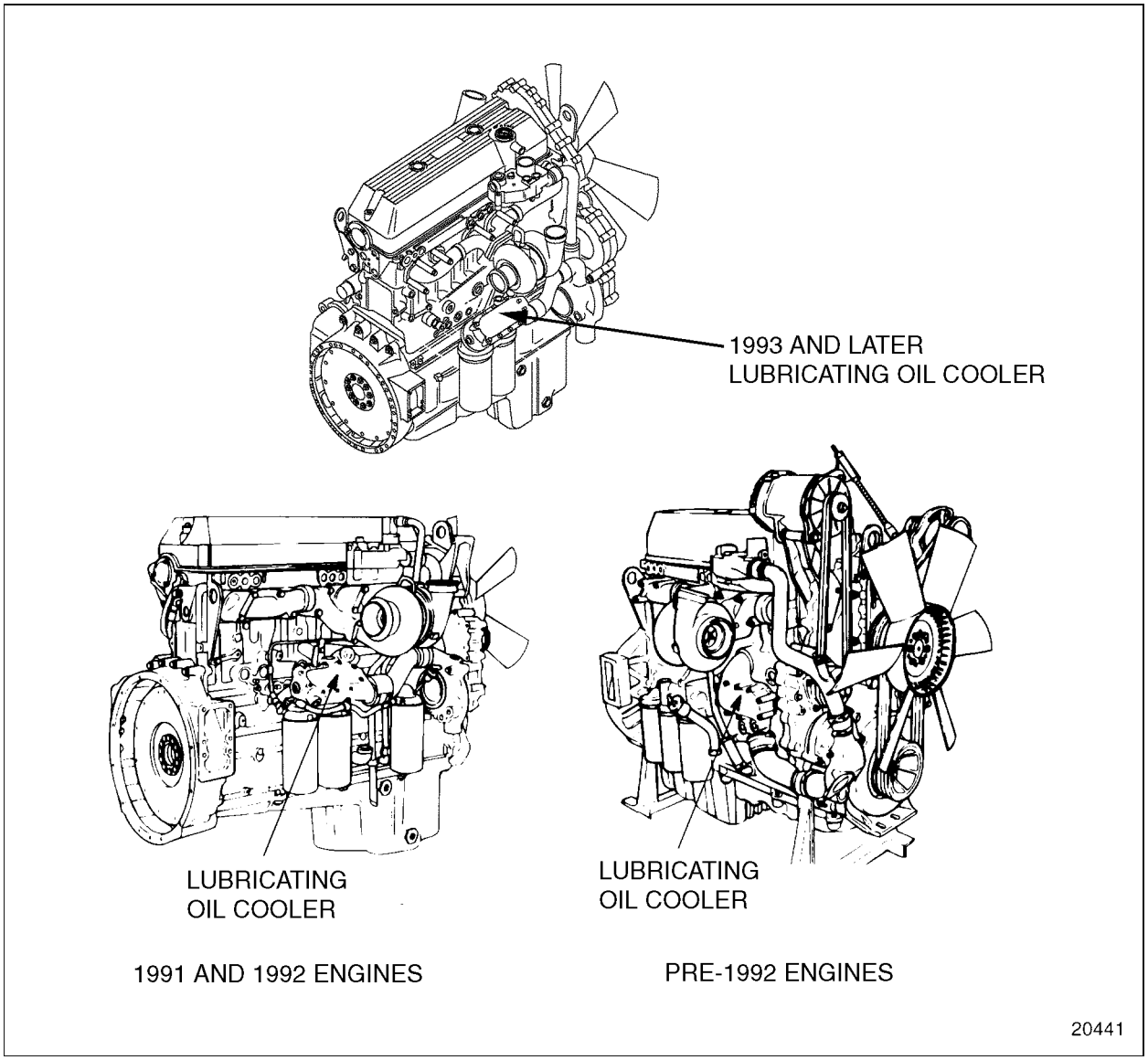

Figure 3-25 Lubricating Oil Cooler (1991 and Later Engines)

 Copyright © 2004 DETROIT DIESEL CORPORATION

To ensure continued engine lubrication if the oil cooler becomes plugged, a bypass passage, located at the oil inlet to the cooler, allows oil to bypass the cooler and flow directly directly to the oil gallery in the cylinder block.

Cooling water is circulated through the oil cooler housing completely surrounding the oil cooler core. Therefore, whenever an oil cooler is assembled, care must be taken to have the proper gaskets in place and the retaining bolts tight to ensure good sealing.

A design change was made to the oil cooler housing and the mounting of Series 60 engines built after 6R37023. Because of this change, there are differences in the servicing of the two designs.

(Rev. 2004) *All information subject to change without notice.*
6SE483 0401 Copyright © 2004 DETROIT DIESEL CORPORATION

The oil cooler housing coolant outlet uses one large rubber O-ring seated in a groove in the outlet neck. See Figure 3-26.

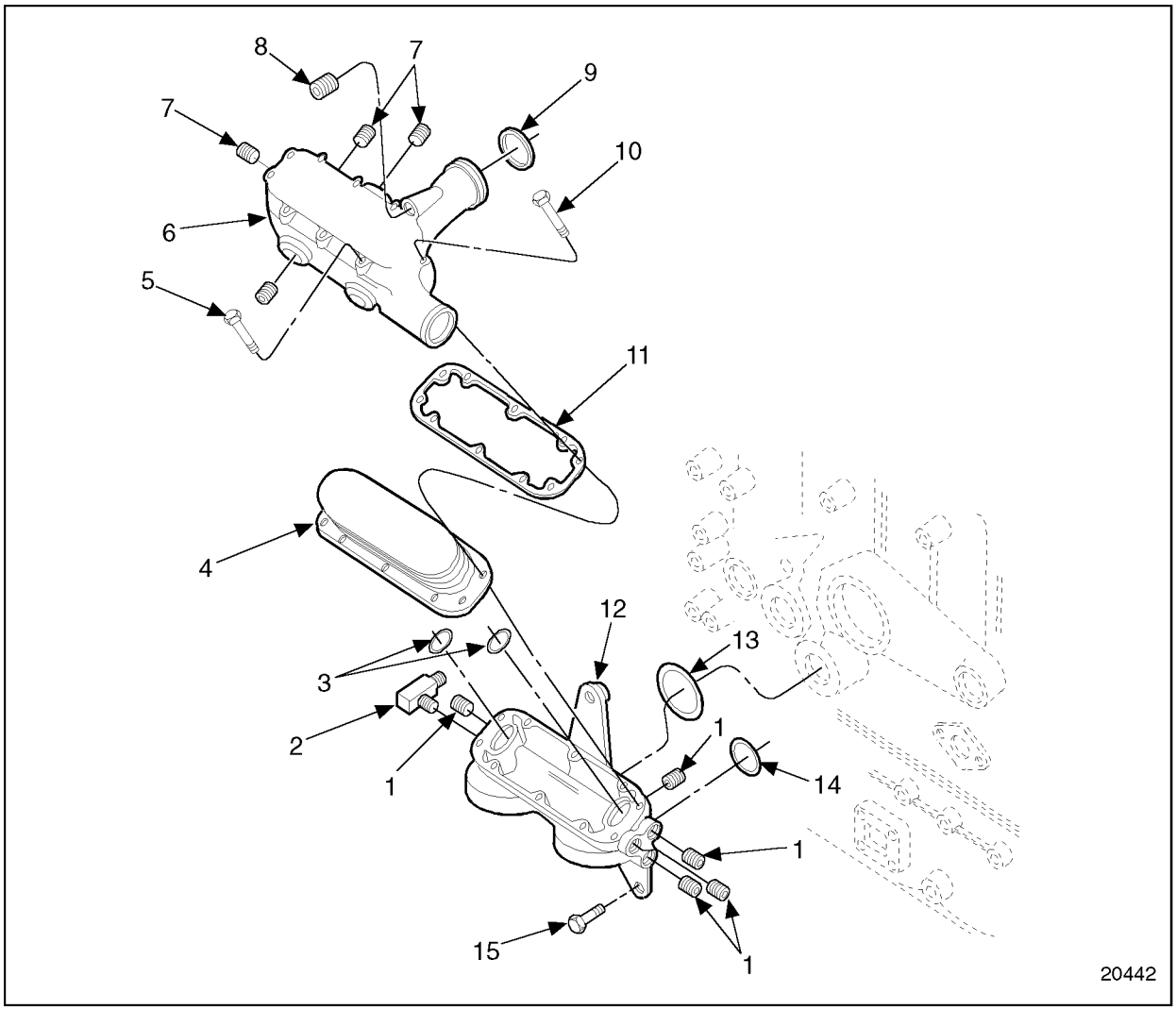

1. Pipe Plugs (5)
2. Fitting
3. O-rings (2)
4. Oil Cooler
5. Bolt, Oil Cooler Housing-to-Adaptor (3)
6. Oil Cooler Housing
7. Pipe Plugs (4)
8. Pipe Plug
9. O-ring
10. Bolt, Oil Cooler Housing-to-Adaptor (7)
11. Gasket, Oil Cooler-to-Housing
12. Oil Filter Adaptor
13. O-ring
14. O-ring
15. Bolt, Oil Filter Adaptor-to-Block (5)

Figure 3-26 Oil Cooler Housing and Related Parts (1991 and Later Engines)

 Copyright © 2004 DETROIT DIESEL CORPORATION

Two small O-rings are positioned in oil filter adaptor counterbores to seal the lubricating oil passages between the oil filter adaptor and the cooler core.

The oil cooler housing is attached to the oil filter adaptor. The flow of oil is from the oil pump, through a vertical passage in the cylinder block, through the full-flow oil filters and then through the oil cooler core and the cylinder block main oil galleries.

(Rev. 2004) *All information subject to change without notice.*
6SE483 0401 Copyright © 2004 DETROIT DIESEL CORPORATION

3.8.1 Repair or Replacement of Oil Cooler

To determine if repair is possible or replacement is necessary, perform the following procedure. See Figure 3-27.

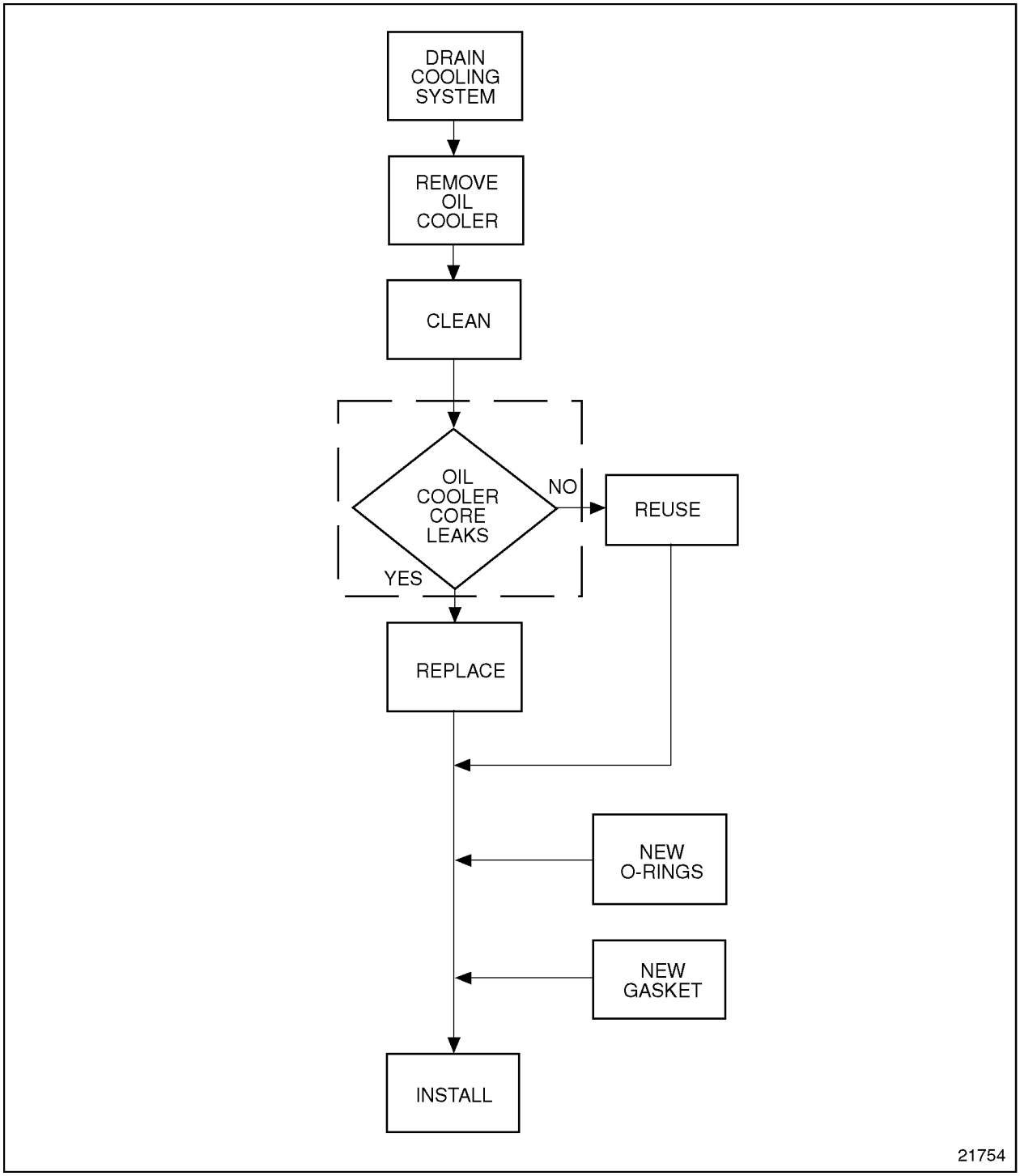

Figure 3-27 Flowchart for Repair or Replacement of Oil Cooler

 Copyright © 2004 DETROIT DIESEL CORPORATION

3.8.2 Removal of Oil Cooler

Remove the oil cooler core and housing as follows:

1. Drain the cooling system by opening the drain cocks at the right rear of the cylinder block, and in the bottom of the water pump housing.
2. Disconnect the hose from the water pump at the lower neck of the oil cooler housing.
3. Match-mark the oil cooler core and housing to ensure correct reinstallation.
4. Remove the bolts that attach the oil cooler housing and core to the oil filter adaptor.
5. Place a pry bar between the oil cooler housing and cylinder block, just below the upper neck. Gently pry the oil cooler housing from the cylinder block and the oil filter adaptor.
6. Use a gasket scraper or chisel and a fiber mallet or plastic hammer to separate the oil cooler core and housing.
7. Remove all traces of gasket material from the oil cooler and housing.

3.8.3 Cleaning of Oil Cooler

Clean the oil cooler core prior to inspection as follows:

1. Remove the core from the oil cooler.

(Rev. 2004) *All information subject to change without notice.*
6SE483 0401 Copyright © 2004 DETROIT DIESEL CORPORATION

CAUTION:

To avoid injury from chemical burns, wear a face shield and neoprene or PVC gloves when handling sensor hoses.

CAUTION:

To avoid injury from improper use of chemicals, follow the chemical manufacturer's usage, handling, and disposal instructions. Observe all manufacturer's cautions.

CAUTION:

To avoid injury when using chemical substances, it is essential to observe the manufacturer's instruction for use, safety, and waste disposal.

CAUTION:

To avoid injury when using caustic cleaning agents, follow the chemical manufacturers usage, disposal, and safety instructions.

NOTICE:

Do not attempt to clean an oil cooler when an engine failure releases metal particles from worn or broken parts into the lubricating oil. The oil cooler core must be replaced. Otherwise, severe engine damage may result.

2. Circulate a solution of 1,1,1-trichloroethylene through the core passages with a force pump to remove the carbon and sludge.

 Copyright © 2004 DETROIT DIESEL CORPORATION

3. Clean the core before the sludge hardens.
4. If the oil passages are badly clogged, circulate an alkaline solution through the core and flush thoroughly with clean, hot water.

Clean the outside of the core:

CAUTION:

To avoid injury from improper use of chemicals, follow the chemical manufacturer's usage, handling, and disposal instructions. Observe all manufacturer's cautions.

CAUTION:

To avoid injury when using chemical substances, it is essential to observe the manufacturer's instruction for use, safety, and waste disposal.

1. Mix the following solutions: Add one-half pound of oxalic acid to each two and one-half gallons of solution composed of one third muriatic acid and two-thirds water.
2. Immerse the core in the solution.
3. Watch the process carefully. When bubbling stops (this usually takes from 30 to 60 seconds), remove the core from the cleaning solution.
4. Thoroughly flush it with clean, hot water.
5. Dip the core in light oil.

(Rev. 2004) *All information subject to change without notice.*
6SE483 0401 Copyright © 2004 DETROIT DIESEL CORPORATION

3.8.3.1 Inspection of Oil Cooler

Inspect oil cooler as follows:

NOTICE:
In cases where a leaking oil cooler core has caused contamination of the engine, the engine must be immediately flushed to prevent corrosion to its internal components. Refer to section 13.13.4.

1. Make a suitable plate and gasket using oil cooler as a template. Use a gasket made from rubber to insure a tight seal.
2. Drill and tap the plate prior to mounting to permit an air hose fitting to be attached at the inlet side of the core. See Figure 3-28.

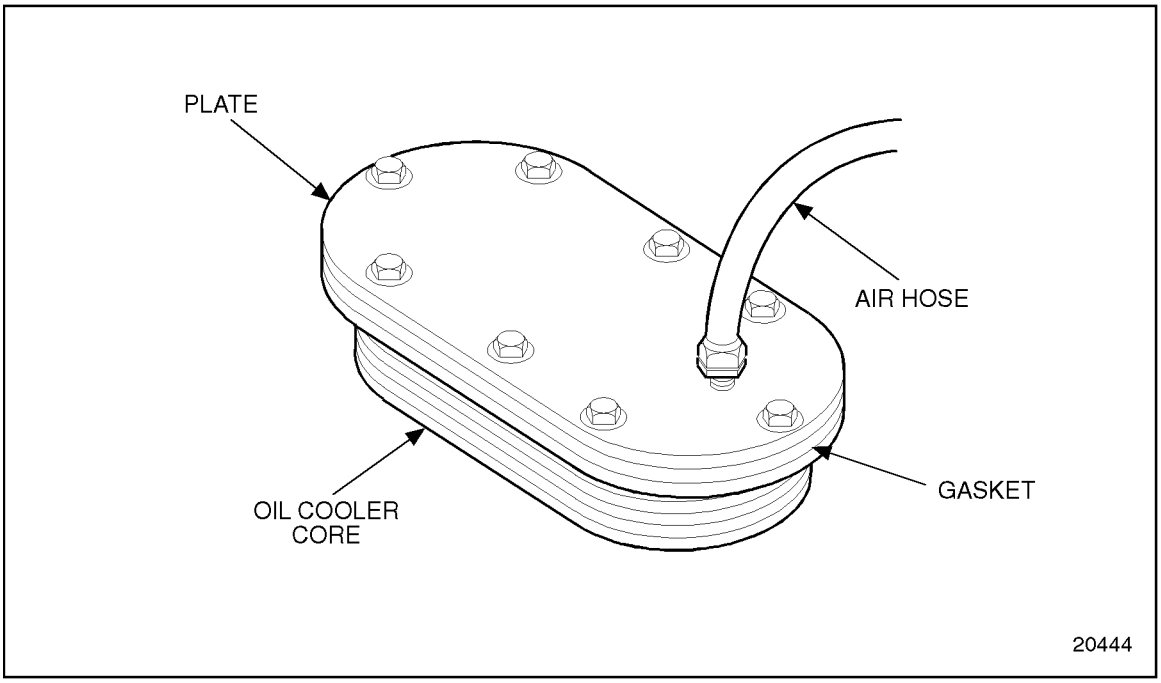

Figure 3-28 Preparing Oil Cooler Core for Pressure Test

 Copyright © 2004 DETROIT DIESEL CORPORATION

3. Attach plate to flanged side of oil cooler core using suitable nuts, washers and bolts.

CAUTION:

To avoid injury from failure of a fitting, hose, or oil cooler core, wear a face shield or goggles when conducting a pressure test.

4. Attach an air hose to the air hose fitting.
5. Regulate air pressure to 517-690 kPa (75-100 lb/in.^{2}) and submerge the oil cooler and plate assembly in a container of water heated to 82°C (180°F).
   [a] Check for leaks as indicated by air bubbles in the water.
   [b] If leaks are indicated, replace the core.
6. After the pressure check is completed, remove the plate and air hose from the cooler core.

CAUTION:

To avoid injury from flying debris when using compressed air, wear adequate eye protection (face shield or safety goggles) and do not exceed 40 psi (276 kPa) air pressure.

7. Dry the core with compressed air.

3.8.4 Installation of Oil Cooler

Install the oil cooler core as follows:

1. Lubricate new O-rings with a light coat of petroleum jelly. See Figure 3-26.
2. Install the new O-rings in the counterbores in the oil filter adaptor.
3. Coat the O-ring with ethylene glycol (coolant).
4. Install a new O-ring in the groove on the oil cooler housing outlet neck.
5. Install a new gasket on the face of the core that will contact the housing.

(Rev. 2004) *All information subject to change without notice.*
6SE483 0401 Copyright © 2004 DETROIT DIESEL CORPORATION

NOTICE:
Use care when installing the oil cooler housing to prevent damaging the outlet neck O-rings on the sharp edges of the opening in the cylinder block. Some cleaning of the block opening is usually needed.

6. Install the core to the housing and install the assembly on the oil filter adaptor.
7. Align the oil cooler housing assembly to the oil filter adaptor. Install the ten oil cooler housing bolts and torque to 30-38 N·m (22-28 lb·ft) using the correct sequence. See Figure 3-29.

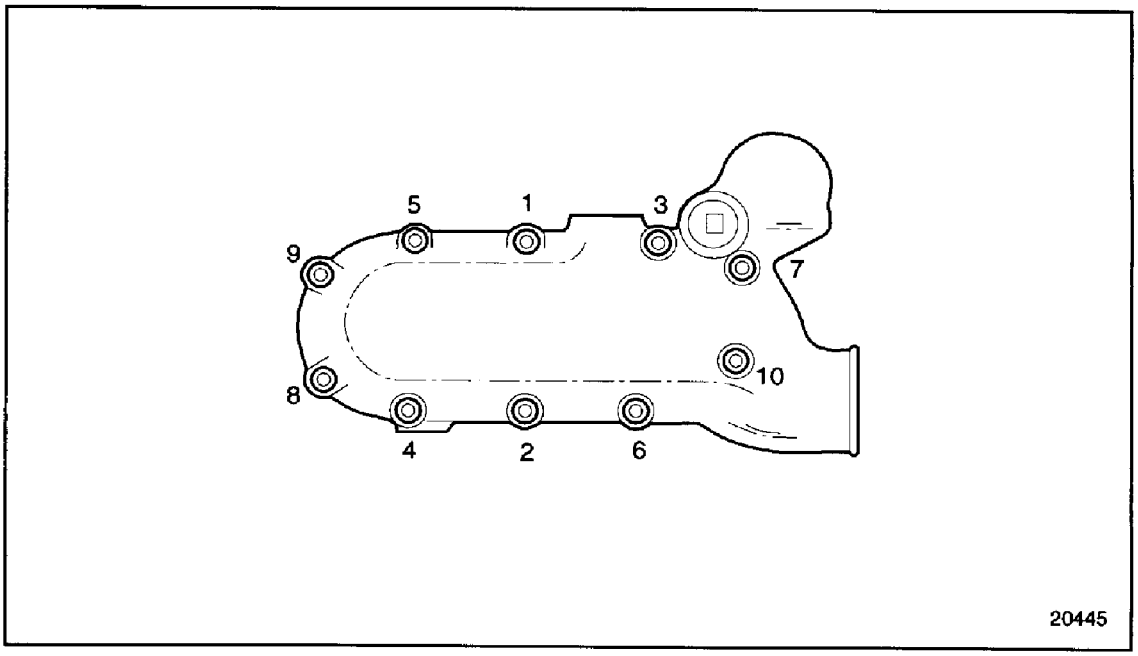

Figure 3-29 Oil Cooler Housing Bolt Torque Sequence

8. Position the hose and clamps in place at the lower neck of the oil cooler housing, ensure the clamps are positioned inside the lip on both the housing and tube. Tighten the clamps.
9. Close the draincocks in the cylinder block and water pump housing. Fill the cooling system. Refer to section 13.13.4.
10. Fill the lubricating system. Refer to section 13.13.1.
11. Refer to section 11.3 for verification of proper oil cooler installation.

 Copyright © 2004 DETROIT DIESEL CORPORATION

3.9 OIL COOLER (PRE-1991 ENGINES)

To perform its functions satisfactorily, the lubricating oil must be kept within the proper temperature limits. If the oil is too cold, it will not flow freely. If the oil is too hot, it cannot support the bearing loads, and it cannot carry away enough heat. As a consequence, oil pressure may drop below acceptable limits and oil consumption may become excessive.

While performing its lubricating and cooling functions, the oil absorbs a considerable amount of heat, and this heat must be dissipated by an oil cooler.

Pre-1991 engines use 4, 6, 7, or 8 plate oil coolers, depending on the horsepower. Ensure that the correct oil cooler is used.

The lubricating oil cooler is mounted on the right side of the cylinder block near the water pump. See Figure 3-25.

To ensure continued engine lubrication if the oil cooler becomes plugged, a bypass passage located at the oil inlet to the cooler, allows oil to bypass the cooler and flow directly to the oil gallery in the cylinder block.

Cooling water is circulated through the oil cooler housing completely surrounding the oil cooler core. Therefore, whenever an oil cooler is assembled, care must be taken to have the proper gaskets in place and the retaining bolts tight to ensure good sealing.

A design change was made to the oil cooler housing and the mounting on Series 60 engines built after 6R37023. Because of this change, the two designs are serviced differently.

(Rev. 2004) *All information subject to change without notice.*
6SE483 0401 Copyright © 2004 DETROIT DIESEL CORPORATION

The coolant outlet oil cooler housing uses two large rubber O-rings seated in a groove in the outlet neck. See Figure 3-30.

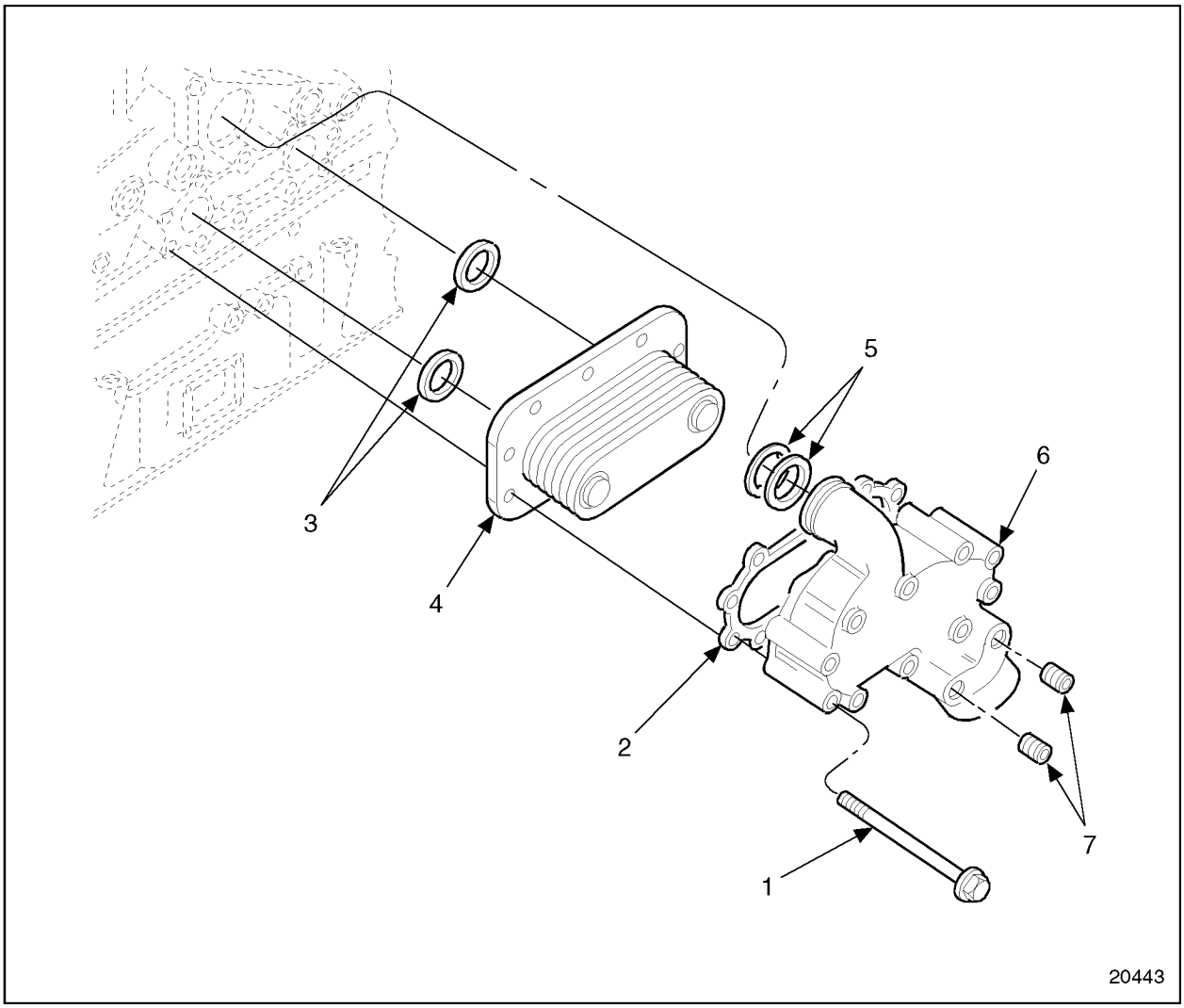

1. Bolt, Oil Cooler Housing-to-Block (10)
2. Gasket, Oil Cooler-to-Housing
3. O-rings, Small (2)
4. Oil Cooler
5. O-rings, Large (2)
6. Oil Cooler Housing
7. Pipe Plugs (2)

Figure 3-30 Oil Cooler Housing and Related Parts (Pre-1991 Engines)

Two small O-rings are positioned in cylinder block counterbores to seal the lubricating oil passages between the block and the cooler core.

The oil cooler housing is attached to the cylinder block. The flow of oil is from the oil pump, through a vertical passage in the cylinder block, through the full-flow oil filters and then through the oil cooler core and the cylinder block main oil galleries.

 Copyright © 2004 DETROIT DIESEL CORPORATION

3.9.1 Repair or Replacement of Oil Cooler

To determine if repair is possible or replacement is necessary, perform the following procedure. See Figure 3-31.

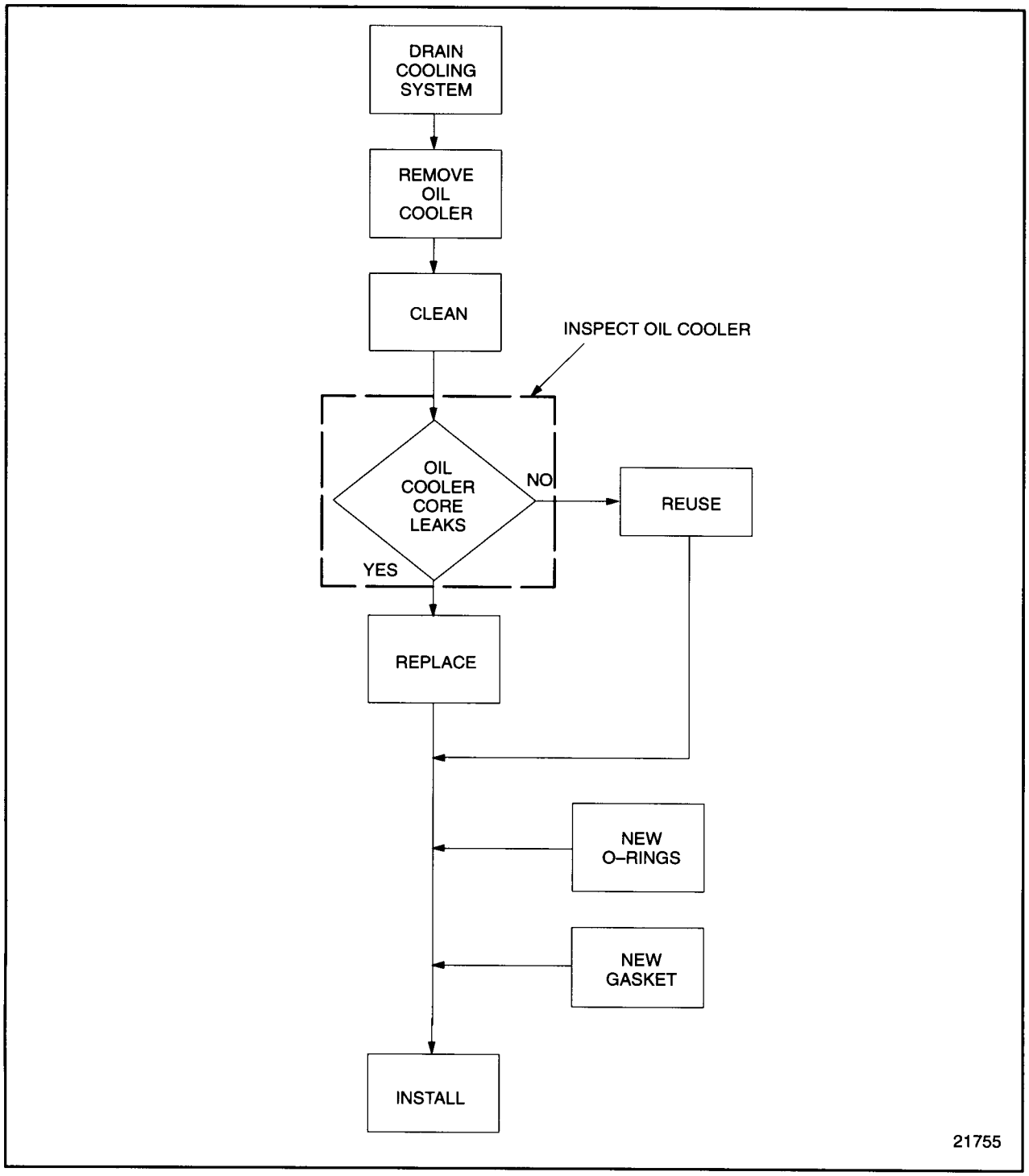

Figure 3-31 Flowchart for Repair or Replacement of Oil Cooler

(Rev. 2004) *All information subject to change without notice.*
6SE483 0401 Copyright © 2004 DETROIT DIESEL CORPORATION

3.9.2 Removal of Oil Cooler

Remove the oil cooler core and housing as follows:

CAUTION:

To avoid injury from improper use of chemicals, follow the chemical manufacturer's usage, handling, and disposal instructions. Observe all manufacturer's cautions.

CAUTION:

To avoid injury when using chemical substances, it is essential to observe the manufacturer's instruction for use, safety, and waste disposal.

CAUTION:

To avoid injury when using caustic cleaning agents, follow the chemical manufacturers usage, disposal, and safety instructions.

NOTICE:

Do not attempt to clean an oil cooler when an engine failure releases metal particles from worn or broken parts into the lubricating oil. The oil cooler core must be replaced. Otherwise, severe engine damage may result.

1. Drain the cooling system by opening the drain cocks at the right rear of the cylinder block, and in the bottom of the water pump housing.

 Copyright © 2004 DETROIT DIESEL CORPORATION

2. Disconnect the hose from the water pump at the lower neck of the oil cooler housing.
3. Match-mark the oil cooler core and housing to ensure correct reinstallation.
4. Remove the bolts that attach the oil cooler housing and core to the cylinder block.
5. Place a pry bar between the oil cooler housing and cylinder block, just below the upper neck. Gently pry the oil cooler housing straight out from the cylinder block. Avoid bending the cooler housing neck that connects into the cylinder block.
6. Use a gasket scraper or chisel and a fiber mallet or plastic hammer to separate the oil cooler core and housing.
7. Remove all traces of gasket material from the oil cooler and housing.

3.9.3 Cleaning of Oil Cooler

Clean the oil cooler prior to inspection as follows:

1. Remove the core from the oil cooler.
2. Circulate a solution of 1,1,1-trichloroethylene through the core passages with a force pump to remove the carbon and sludge.
3. Clean the core before the sludge hardens.
4. If the oil passages are badly clogged, circulate an alkaline solution through the core and flush thoroughly with clean, hot water.

Clean the outside of the core:

(Rev. 2004) *All information subject to change without notice.*
6SE483 0401 Copyright © 2004 DETROIT DIESEL CORPORATION

CAUTION:

To avoid injury from improper use of chemicals, follow the chemical manufacturer's usage, handling, and disposal instructions. Observe all manufacturer's cautions.

CAUTION:

To avoid injury when using chemical substances, it is essential to observe the manufacturer's instruction for use, safety, and waste disposal.

CAUTION:

To avoid injury when using caustic cleaning agents, follow the chemical manufacturers usage, disposal, and safety instructions.

1. Mix the following solutions: Add one-half pound of oxalic acid to each two and one-half gallons of solution composed of one third muriatic acid and two-thirds water.
2. Immerse the core in the solution.
3. Watch the process carefully. When bubbling stops (this usually takes from 30 to 60 seconds), remove the core from the cleaning solution.
4. Thoroughly flush it with clean, hot water.
5. Dip the core in light oil.

 Copyright © 2004 DETROIT DIESEL CORPORATION

3.9.3.1 Inspection of Oil Cooler

Inspect the oil cooler as follows:

NOTICE:
In cases where a leaking oil cooler core has caused contamination of the engine, the engine must be immediately flushed to prevent corrosion to its internal components. Refer to section 13.13.4.

1. Make a suitable plate and gasket using the oil cooler as a template. Use a gasket made from rubber to ensure a tight seal.
2. Drill and tap the plate prior to mounting to permit an air hose fitting to be attached at the inlet side of the core. See Figure 3-32.

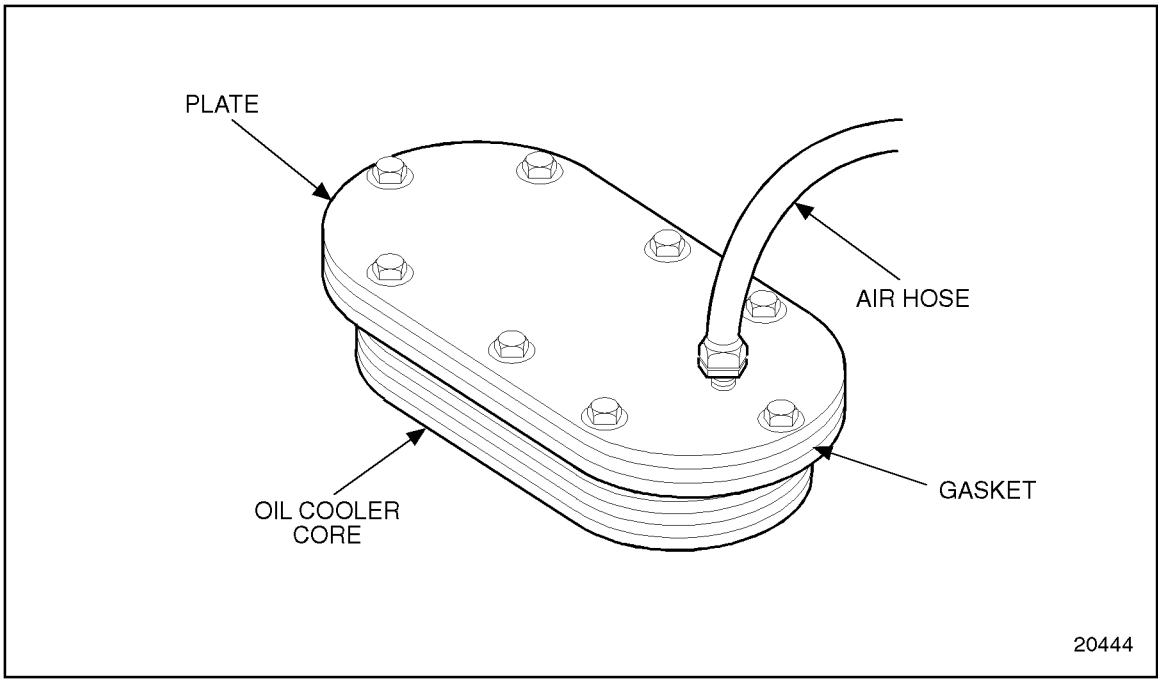

Figure 3-32 Preparing Oil Cooler Core for Pressure Test

(Rev. 2004) *All information subject to change without notice.*
6SE483 0401 Copyright © 2004 DETROIT DIESEL CORPORATION

3. Attach plate to flanged side of oil cooler core using suitable nuts, washers and bolts.

CAUTION:

To avoid injury from failure of a fitting, hose, or oil cooler core, wear a face shield or goggles when conducting a pressure test.

4. Attach an air hose to the air hose fitting.
5. Regulate air pressure to 517-690 kPa (75-100 lb/in.^{2}) and submerge the oil cooler and plate assembly in a container of water heated to 82°C (180°F).
   [a] Check for leaks as indicated by air bubbles in the water.
   [b] If leaks are indicated, replace the core.
6. After the pressure check is completed, remove the plate and air hose from the cooler core.

CAUTION:

To avoid injury from flying debris when using compressed air, wear adequate eye protection (face shield or safety goggles) and do not exceed 40 psi (276 kPa) air pressure.

7. Dry the core with compressed air.

 Copyright © 2004 DETROIT DIESEL CORPORATION

3.9.4 Installation of Oil Cooler

Install the oil cooler core as follows:

1. Lubricate the new O-rings with a light coat of petroleum jelly.
2. Install the O-rings in the counterbores in the cylinder block.
3. Replace the O-rings on the oil cooler housing outlet neck.
4. Coat the O-ring with ethylene glycol (coolant).
5. Install the O-ring in the groove on the oil cooler housing outlet neck.
6. Install the guide studs, J 35786, into two threaded holes in the cylinder block. See Figure 3-33.

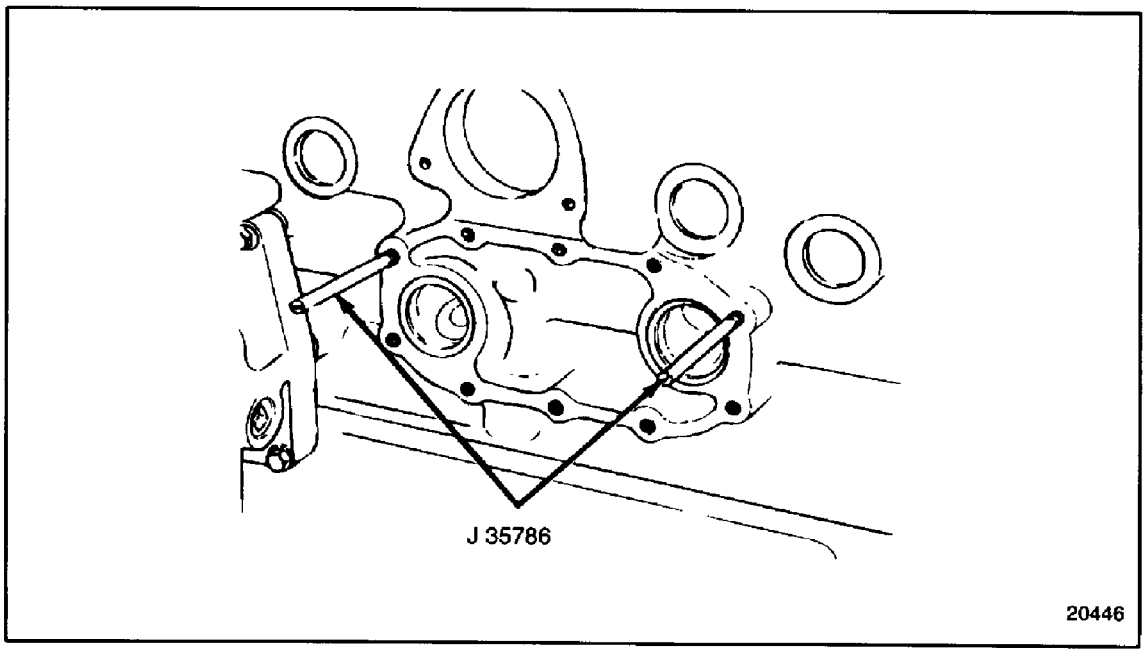

Figure 3-33 Oil Cooler Guide Stud Installation

NOTICE:
Use care when installing the oil cooler housing to prevent damaging the outlet neck O-rings on the sharp edges of the opening in the cylinder block. Some cleaning of the block opening is usually needed.

7. Install a new gasket on the face of the core that will contact the housing.

(Rev. 2004) *All information subject to change without notice.*
6SE483 0401 Copyright © 2004 DETROIT DIESEL CORPORATION

8. Install the core to the housing and install the assembly on the guide studs.
9. Use a fiber mallet or plastic hammer to seat the oil cooler assembly by striking the snout and lower area with several sharp blows.
10. Install at least two oil cooler housing-to-cylinder block bolts and finger-tighten.
11. Remove the guide studs.
12. Install the remaining bolts. Torque the ten bolts to 30-38 N·m (22-28 lb·ft) using the proper sequence. See Figure 3-34.

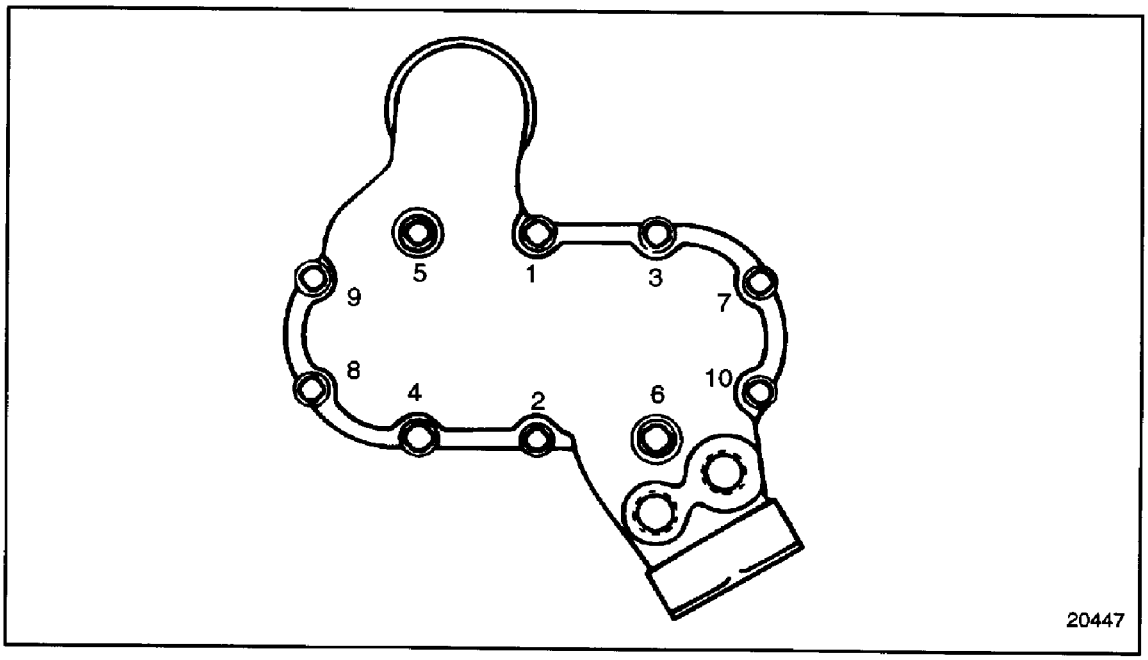

Figure 3-34 Oil Cooler Housing Bolt Torque Sequence

13. Coat the threads of the pipe plug with Loctite® Pipe Sealer with Teflon® PT-7260(or equivalent) before installation.
14. Position the hose and clamps in place at the lower neck of the oil cooler housing, ensure the clamps are positioned inside the lip on both the housing and tube. Tighten the clamps.
15. Close the drain cocks in the cylinder block and water pump housing.
16. Fill the cooling system. Refer to section 13.13.4.
17. Fill the lubricating system. Refer to section 13.13.1.
18. Refer to section 11.3 for verification of proper oil cooler installation.

 Copyright © 2004 DETROIT DIESEL CORPORATION

3.10 OIL LEVEL DIPSTICK ASSEMBLY

A steel ribbon-type oil level dipstick may be used to check the level of oil in the engine oil pan. The dipstick is located in a tube attached by a threaded adaptor to an opening in the oil pan. See Figure 3-35.

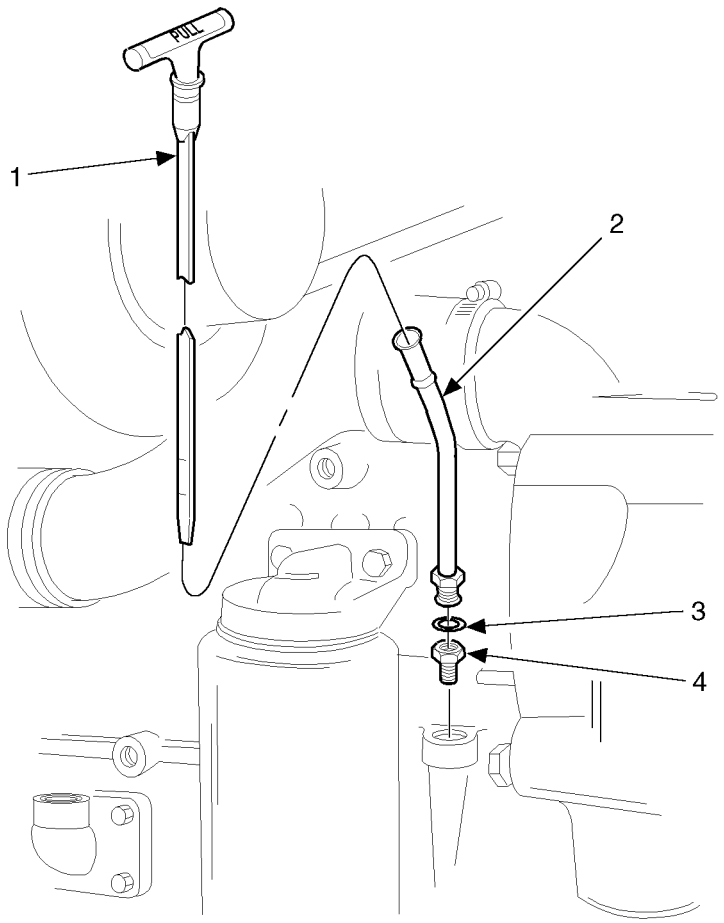

1. Dipstick Gage
2. Dipstick Tube Assembly
3. Copper Seal
4. Adaptor

Figure 3-35 Oil Level Dipstick Location

Snap action dipsticks have locking tangs and an O-ring seal in the tee-handle. A copper sealing ring between the adaptor and dipstick tube insures a tight seal.

(Rev. 2004) *All information subject to change without notice.*
6SE483 0401 Copyright © 2004 DETROIT DIESEL CORPORATION

NOTICE:

Maintain the oil level between the full and low marks on the dipstick. Never allow it to drop below the low mark. No advantage is gained by having the oil level above the full mark. Overfilling may cause the oil to be churned by the balance shafts and crankshaft throws, causing foaming or aeration of the oil. Operation below the low mark may expose the pump pickup, causing aeration, loss of pressure and engine damage.

Check the oil level after the engine has been stopped for a minimum of 20 minutes to permit oil in the various parts of the engine to drain back into the oil pan.

NOTE:
Engine oil capacity can vary, depending on the oil pan used and the engine application.

For total oil capacity refer to the engine application manual or contact an authorized Detroit Diesel distributor.

Dipsticks are normally marked for use only when the equipment the engine powers is on a level surface. Improper oil levels can result if the oil level is checked with the equipment on a grade, or if insufficient time is allowed for oil to drain back to the sump.

The current dipstick adaptor has a thicker wall than the former adaptor and requires a copper seal between the adaptor and the nut on the oil gage tube assembly. See Figure 3-35.

 Copyright © 2004 DETROIT DIESEL CORPORATION

3.10.1 Repair or Replacement of Oil Dipstick Assembly

To determine if repair is possible or replacement is necessary, perform the following procedure. See Figure 3-36.

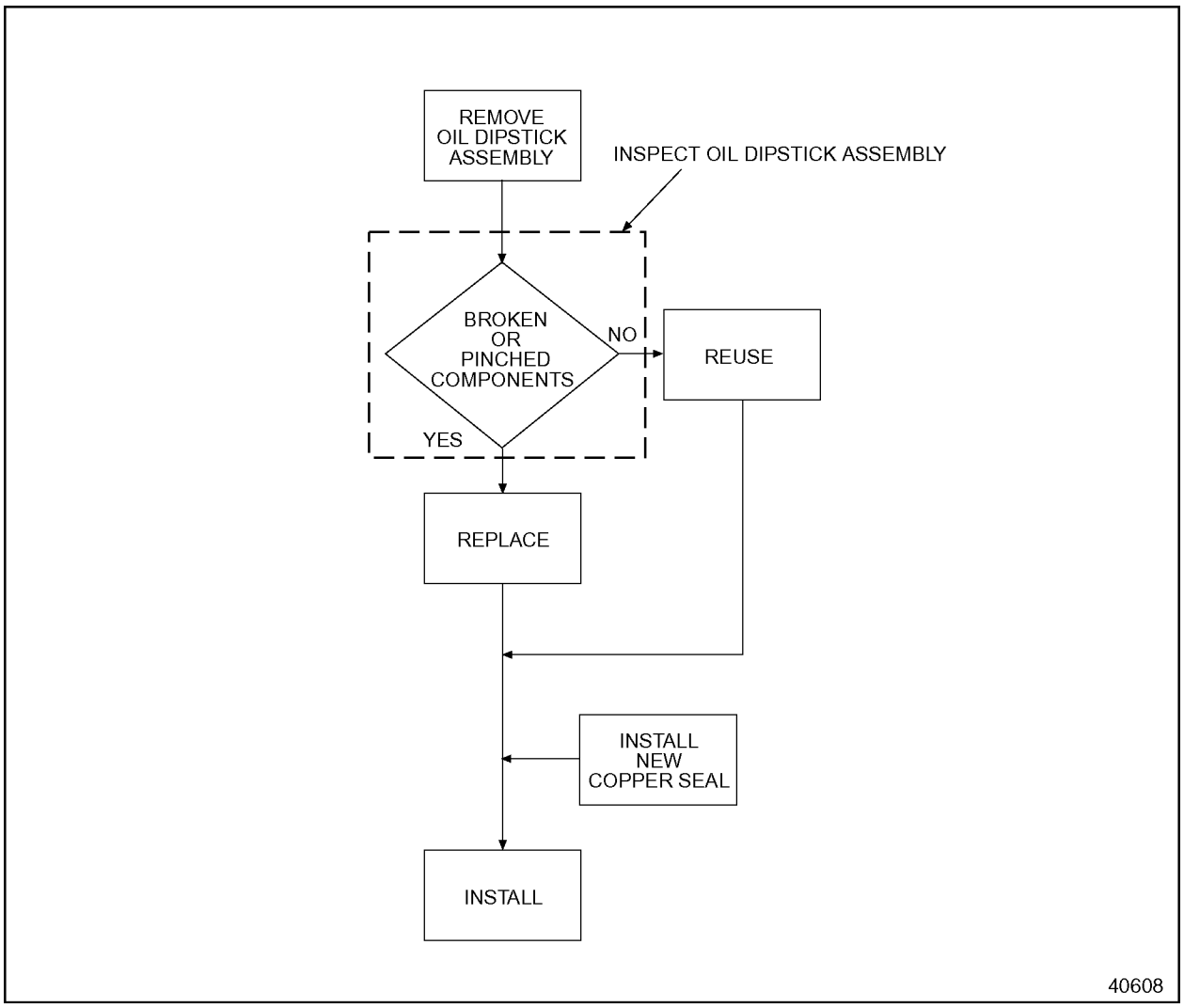

Figure 3-36 Flowchart for Repair or Replacement of Oil Dipstick Assembly

(Rev. 2004) *All information subject to change without notice.*
6SE483 0401 Copyright © 2004 DETROIT DIESEL CORPORATION

3.10.2 Removal of Oil Dipstick Assembly

Precleaning is not necessary.

Remove oil dipstick assembly as follows:

1. Remove dipstick from dipstick adaptor.
2. Remove oil tube assembly, copper seal, and dipstick adaptor from cylinder block. Discard copper seal.

3.10.2.1 Inspection of Oil Dipstick Assembly

Inspect oil dipstick assembly as follows:

1. Inspect dipstick assembly for any damaged parts. Check components for any broken or pinched parts.
   [a] If any components are damaged, replace with new parts.
   [b] If components are not damaged, reuse the parts.

 Copyright © 2004 DETROIT DIESEL CORPORATION

3.10.3 Installation of Oil Dipstick Assembly

Assemble oil dipstick assembly as follows:

1. Install dipstick adaptor into cylinder block. Torque to 22 N·m (16 lb·ft). See Figure 3-37.

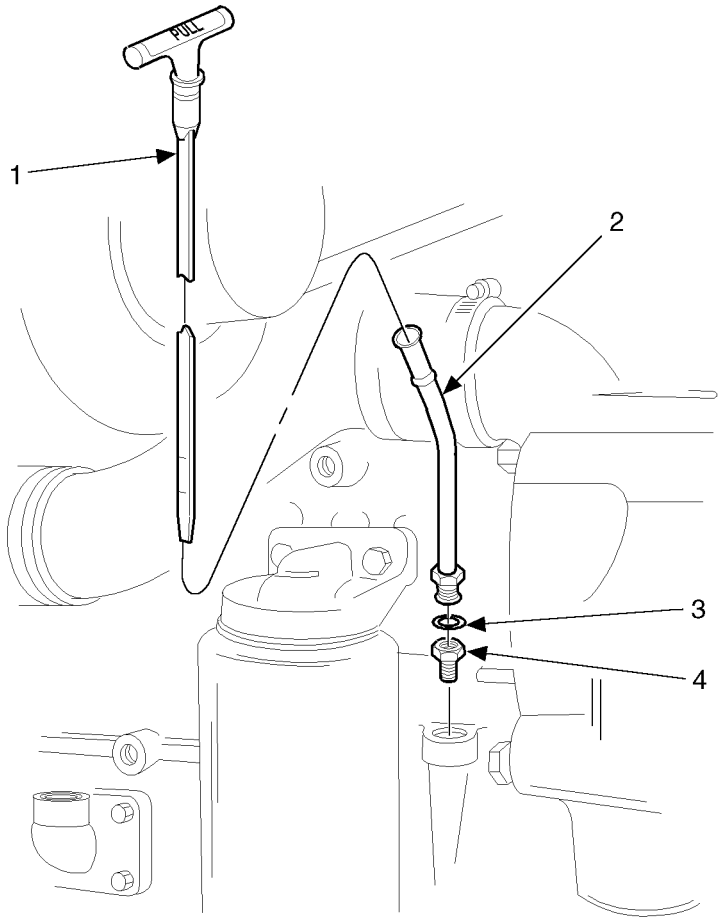

1. Dipstick Gage
2. Dipstick Tube Assembly
3. Copper Seal
4. Adaptor

Figure 3-37 Dipstick Adaptor with Seal

2. Insert the new copper seal and thread the oil gage tube assembly nut into the adaptor.
3. While holding the adaptor with a wrench, properly align the oil gage tube assembly.
4. Tighten the nut on the tube securely.
5. Install dipstick.

(Rev. 2004) *All information subject to change without notice.*
6SE483 0401 Copyright © 2004 DETROIT DIESEL CORPORATION

3.11 OIL PAN

The oil pan used on the Series 60 engine is made of plastic (epoxy vinyl ester) or aluminum. For engines built after April 1999, a one-piece bolt assembly is used with the improved plastic front sump and rear sump oil pans and a new isolator seal. **The new isolator seal is reusable.** See Figure 3-38.

NOTICE:
Old and new components should not be mixed.

NOTE:
Effective April 1999, all Series 60 engines are bulit with a reusable oil pan isolator seal. This seal does not need to be replaced at the time of removal provided there is not any damage observed.

NOTE:
To expedite oil pan seal installation, use a soapy water solution to assist in installing the seal into the groove of the pan. When installing a new pan on an engine prior to serial number 6R490000 (built March 1, 1999), shift the pan toward the front of the engine

 Copyright © 2004 DETROIT DIESEL CORPORATION

before tightening the bolts. This will help eliminate the potential for any interference between the flywheel housing and the oil pan.

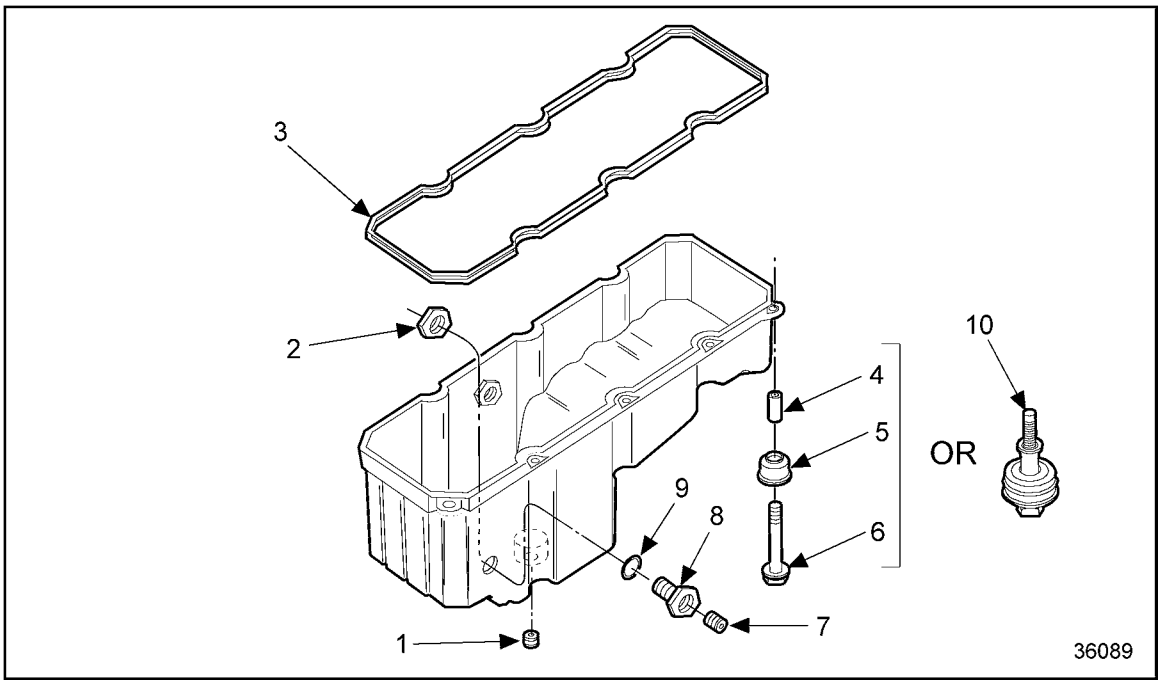

1. Drain Plug
2. Nut
3. Isolator Seal
4. Sleeve
5. Isolator and Washer
6. Bolt
7. Plug
8. Insert
9. Seal
10. Bolt ASM, Replaces 4, 5, 6

Figure 3-38 Typical Oil Pan Assembly

(Rev. 2004) *All information subject to change without notice.*
6SE483 0401 Copyright © 2004 DETROIT DIESEL CORPORATION

The plastic oil pan has side plugs that are threaded into a special stainless steel insert which is restrained by a nut inside the pan. Sealing is provided by a fluoroelastomer seal ring that fits into a groove machined on the flange of the insert. See Figure 3-39.

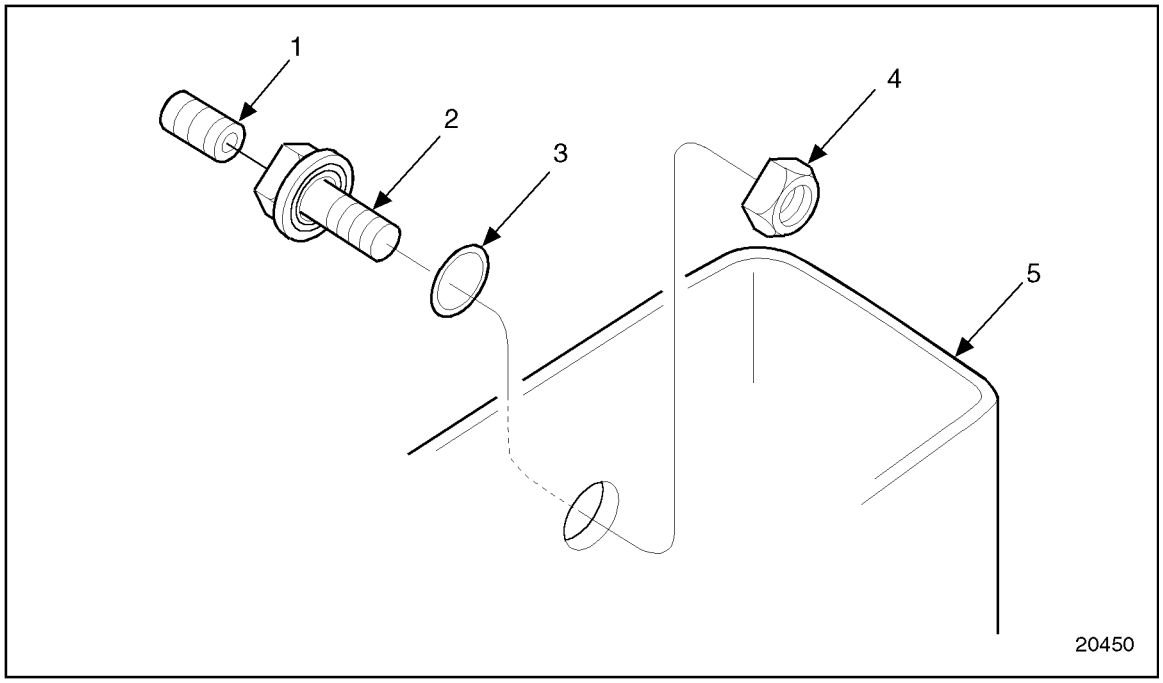

1. Plug
2. Insert
3. Seal
4. Nut
5. Oil Pan

Figure 3-39 Side Plug Detail

Rubber isolator-washer assemblies and sleeves are used for attaching the oil pan. The metal sleeve spacer is inserted through the isolator and limits the travel of the oil pan bolts to prevent over-tightening and damaging the oil pan and isolator.

Effective August 1995, isolators made of an improved vibration-absorbing material were released to reduce noise emissions. In addition, isolator bolt sleeve length was increased by 0.8 mm (0.032 in.) to accommodate the slightly longer isolators.

When installing a pipe plug, coat the threads with Loctite® PT 7271 sealant (or equivalent), hold the insert to keep it from turning, and torque the plug to 45-56 N·m (33-41 lb·ft).

 Copyright © 2004 DETROIT DIESEL CORPORATION

3.11.1 Repair or Replacement of Oil Pan

To determine if repair is possible or replacement is necessary, perform the following procedure. See Figure 3-40.

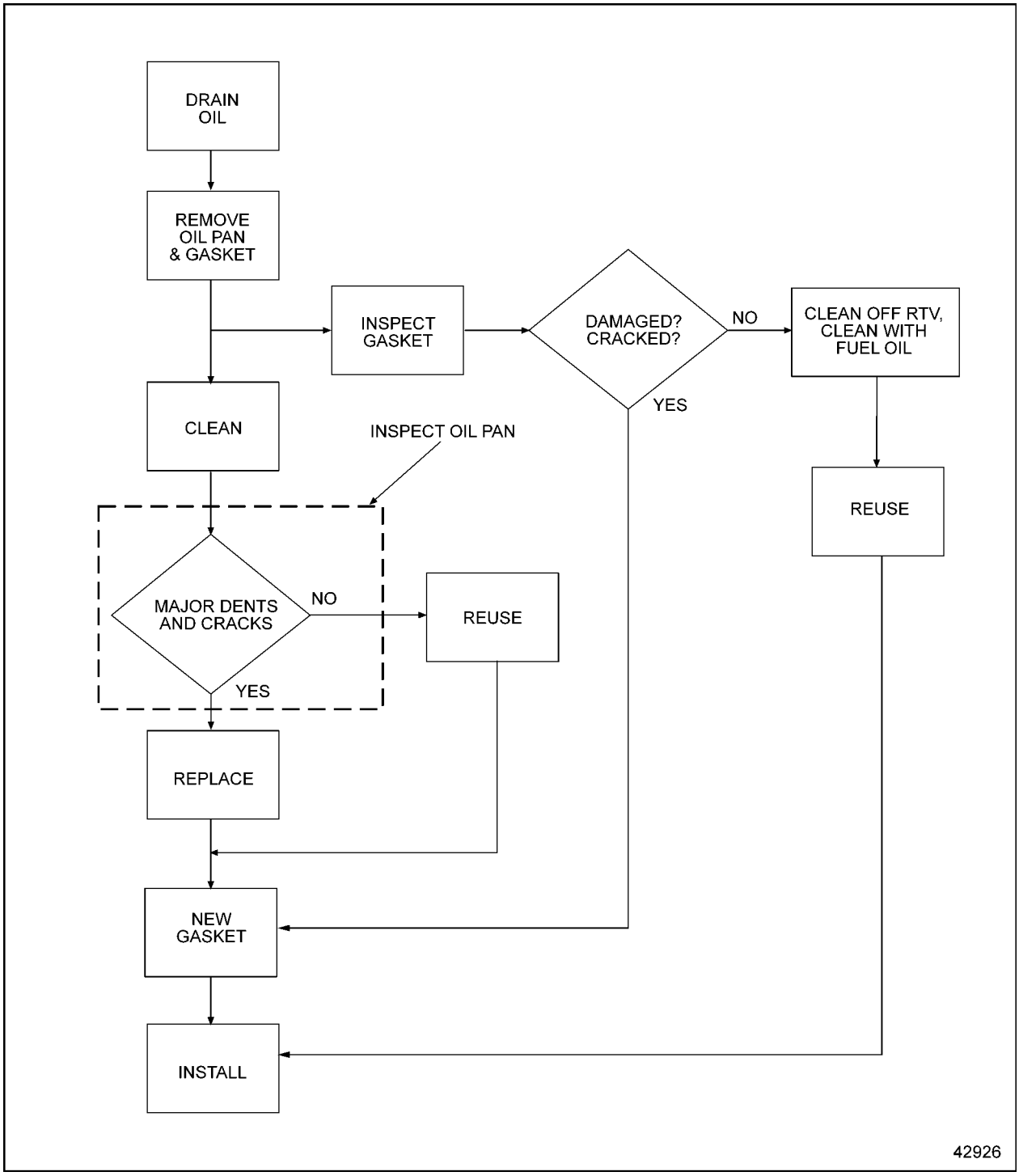

Figure 3-40 Flow Chart for Repair or Replacement of Oil Pan

(Rev. 2004) *All information subject to change without notice.*
6SE483 0401 Copyright © 2004 DETROIT DIESEL CORPORATION

3.11.2 Removal of Oil Pan

Precleaning is not necessary.

NOTICE:
Do not support the engine on the oil pan. Damage to the oil pan or engine could result.

NOTE:
On almost all engine applications it is possible to remove the oil pan without removing the engine.

If the engine is to be removed from the vehicle, the oil pan should be left in place until the engine is removed.

The procedure for removing the oil pan will vary with each installation. However, the following procedures will generally apply.

NOTICE:
When removing a side plug, hold the flats of the insert with a 2-1/8 in. open end or large adjustable wrench to keep it from turning. If the insert is loosened, it may be necessary to remove the oil pan and tighten the nut to prevent a possible oil leak. If required, torque the nut to 186-199 N·m (137-147 lb·ft).

Remove the oil pan as follows:

1. Remove the drain plug and drain the engine oil.
2. Remove the ten oil pan bolts, washers, isolators and sleeves or ten bolt assemblies. Remove the counter bolts on each side last.
3. Remove the oil pan, taking care not to damage the oil pump inlet pipe and screen.
4. Remove the oil pan isolator seal and inspect for damage.

 Copyright © 2004 DETROIT DIESEL CORPORATION

3.11.3 Cleaning of Oil Pan

Clean the oil pan prior to inspection as follows:

1. Clean the oil pan and attaching hardware with clean fuel oil.

CAUTION:

To avoid injury from flying debris when using compressed air, wear adequate eye protection (face shield or safety goggles) and do not exceed 40 psi (276 kPa) air pressure.

2. Dry with compressed air.

NOTICE:

Do not use solvents to clean isolators. Damage to the isolator will result.

3. Clean the surfaces of the cylinder block, gear case and flywheel housing where they mate with the oil pan.

3.11.3.1 Inspection of Oil Pan

Inspect the oil pan, inserts, bolt isolators and isolator seal as follows:

1. Check for dryness, cracks or tears.
   [a] If isolator is damaged, replace with new part.
   [b] If isolator is not damaged, reuse the part.
2. Check oil pan inserts and nut assemblies for tightness.
   [a] If inserts and nut assemblies are loose, torque to 183-197 N·m (135-145 lb·ft).
3. Check oil pan for major dents, cracks and other damage.
   [a] If oil pan is damaged, replace with new part.
   [b] If oil pan is not damaged, reuse the part.
4. Check isolator seal for dryness, cracks or tears.
   [a] If seal is damaged replace with new part.
   [b] If seal is not damaged clean off excess RTV clean seal with clean fuel oil dry completly and reuse part.

(Rev. 2004) *All information subject to change without notice.*
6SE483 0401 Copyright © 2004 DETROIT DIESEL CORPORATION

3.11.4 Installation of Oil Pan

Install the oil pan as follows:

1. Insert the raised lip portion of the isolator seal into the groove in the oil pan.
2. Press down on the isolator seal and insert it completely around the oil pan. Be careful not to stretch or bunch the seal. For best results, install the seal at each corner, then at points half way between the corners. Continue in this manner, halving the distance and seating the seal.
3. Insert a metal sleeve spacer into each isolator and washer.
4. Install the ten oil pan bolts into isolator assemblies or install ten bolt assemblies.
5. Ensure the joint surfaces of the gear case and the cylinder block, the gear case cover and gear case, and the flywheel housing and the cylinder block are cleaned and there is no damage to prevent sealing.
6. Apply a 3 mm (1/8 in.) bead of RTV across joints shown. See Figure 3-41.

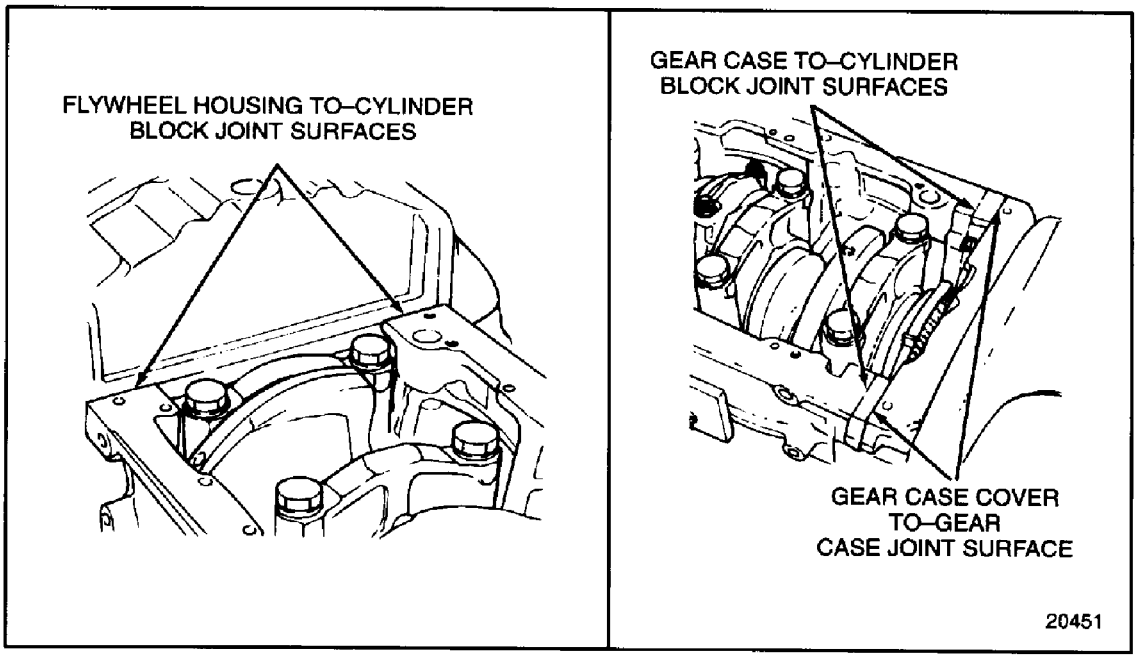

Figure 3-41 RTV Application

7. Install the oil pan assembly in position on the cylinder block.

 Copyright © 2004 DETROIT DIESEL CORPORATION

8. Ensure that the isolator seal has not been disturbed. Torque the ten oil pan bolt assemblies to 24-30 N·m (18-22 lb·ft), using the proper sequence. See Figure 3-42.

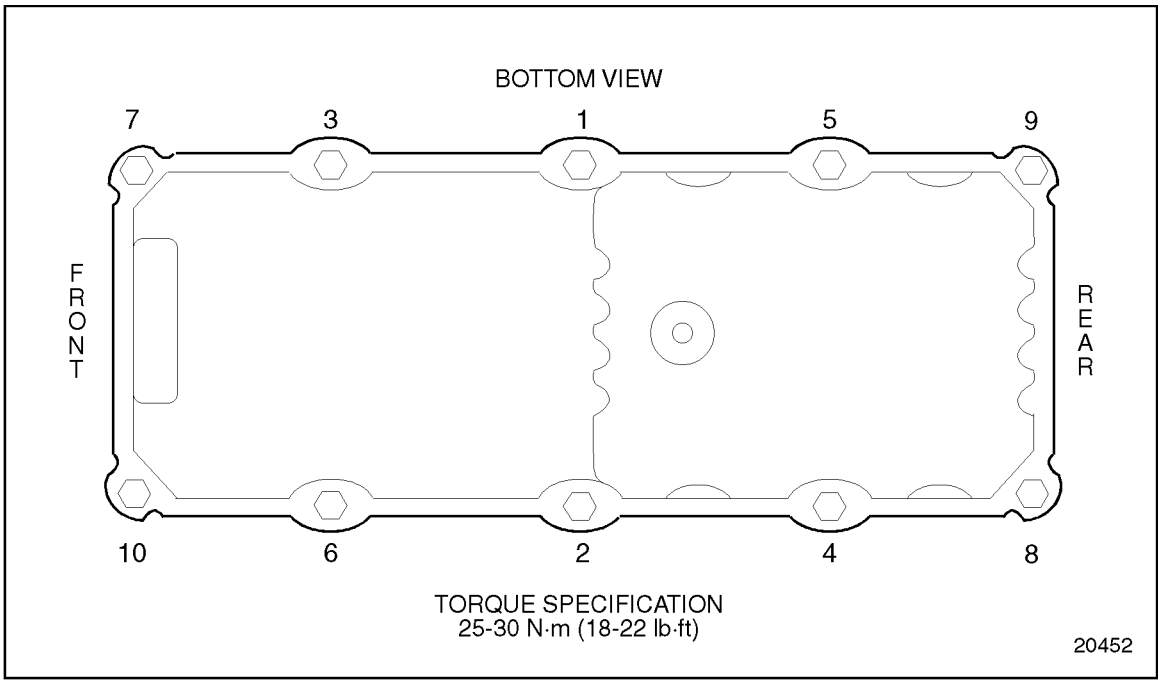

Figure 3-42 Oil Pan Bolt Sequence

9. Install and torque the 3/4 in.-14 square, magnetic, oil drain plug to 45-56 N·m (33-41 lb·ft).
10. Install and tighten any other plugs that were removed from the oil pan.

NOTE:
When installing a pipe plug, coat the threads with Loctite® PT 7271 sealant (or equivalent).

11. Refill the crankcase with lubricating oil. Refer to section 13.13.1.
12. Refer to section 11.3 for verification of proper oil pan installation.

(Rev. 2004) *All information subject to change without notice.*
6SE483 0401 Copyright © 2004 DETROIT DIESEL CORPORATION

3.12 VENTILATING SYSTEM

Vapors, formed within the engine, are removed from the crankcase, gear train and valve compartment by a continuous pressurized ventilating system.

A slight pressure is maintained in the engine crankcase by the normal seepage of a small amount of air and combustion gases past the piston rings. These gases are swept up through the engine and pass through a crankcase breather. On vehicle and industrial engines the gases are then vented to the atmosphere.

Breather extension hoses may be required on certain Series 60 engines used in on-highway vehicle applications. Under certain conditions, the vapors from an operating engine may be circulated through the battery charging alternator by the alternator cooling fan. Excessive ingestion of vapors may lead to alternator malfunction. This can occur if the internal components of the alternator become coated with oil-laden dust or road grit.

To minimize the potential for this condition, check the length of the engine breather tube and add an extension hose, if necessary. For proper dissipation of vapors, the end of the breather hose *must*extend at least 12 inches below the oil pan rail.

Series 60 pleasure craft marine engines and certain commercial marine engines use a closed crankcase ventilation system. In this system, engine vapors are piped from the valve rocker cover breather into the air separator/air silencer assembly, where they mix with incoming air for combustion. The vapors are not vented to the atmosphere, as on vehicle and industrial engines. Any oil droplets contained in the vapor are trapped within the air separator and drain back to the crankcase. Refer to section 6.3 for air seperator information.

A wire mesh element is located inside the valve cover, or in a separate housing on the valve cover cap or at the gear case cover. This element traps excess engine oil particles in the vapor and returns them to the crankcase. See Figure 3-43.

NOTE:
The Series 60G automotive engine uses a closed crankcase breather system. Refer to section 6.5 for more information.

 Copyright © 2004 DETROIT DIESEL CORPORATION

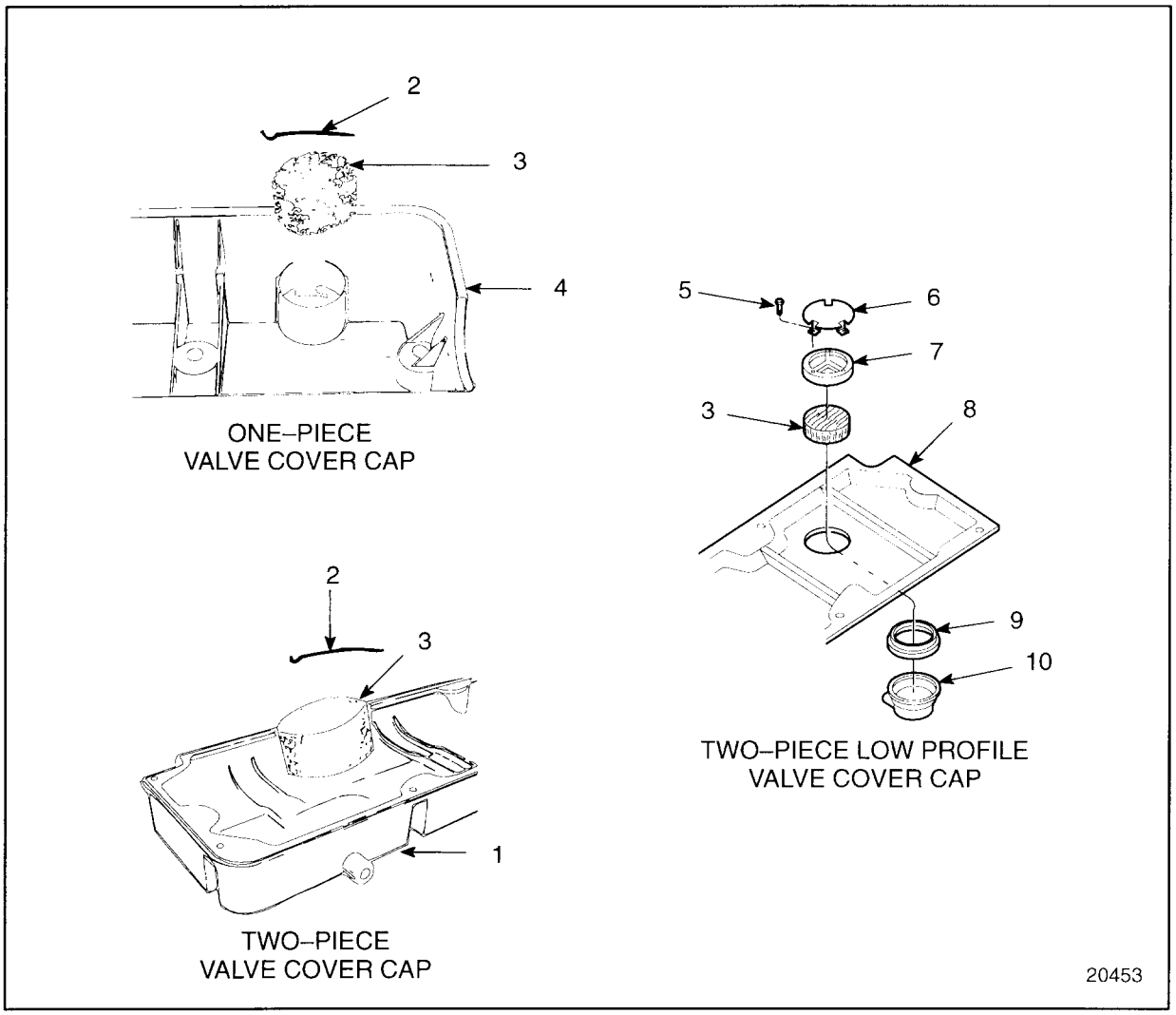

1. Two-piece Valve Cover Cap
2. Retainer Clip
3. Wire Mesh Element
4. One-piece Valve Cover
5. Screws
6. Baffle
7. Retainer
8. Valve Cover Cap
9. Seal
10. Breather Housing

Figure 3-43 Wire Mesh Elements

The former baffle, installed on engines between 6R128446 and 6R134254, has been replaced with the current baffle to redirect oil splash from the rocker arms. This prevents oil from contaminating the breather element.

(Rev. 2004) *All information subject to change without notice.*
6SE483 0401 Copyright © 2004 DETROIT DIESEL CORPORATION

3.12.1 Repair or Replacement of Ventilating System

To determine if repair is possible or replacement is necessary, perform the following procedure. See Figure 3-44.

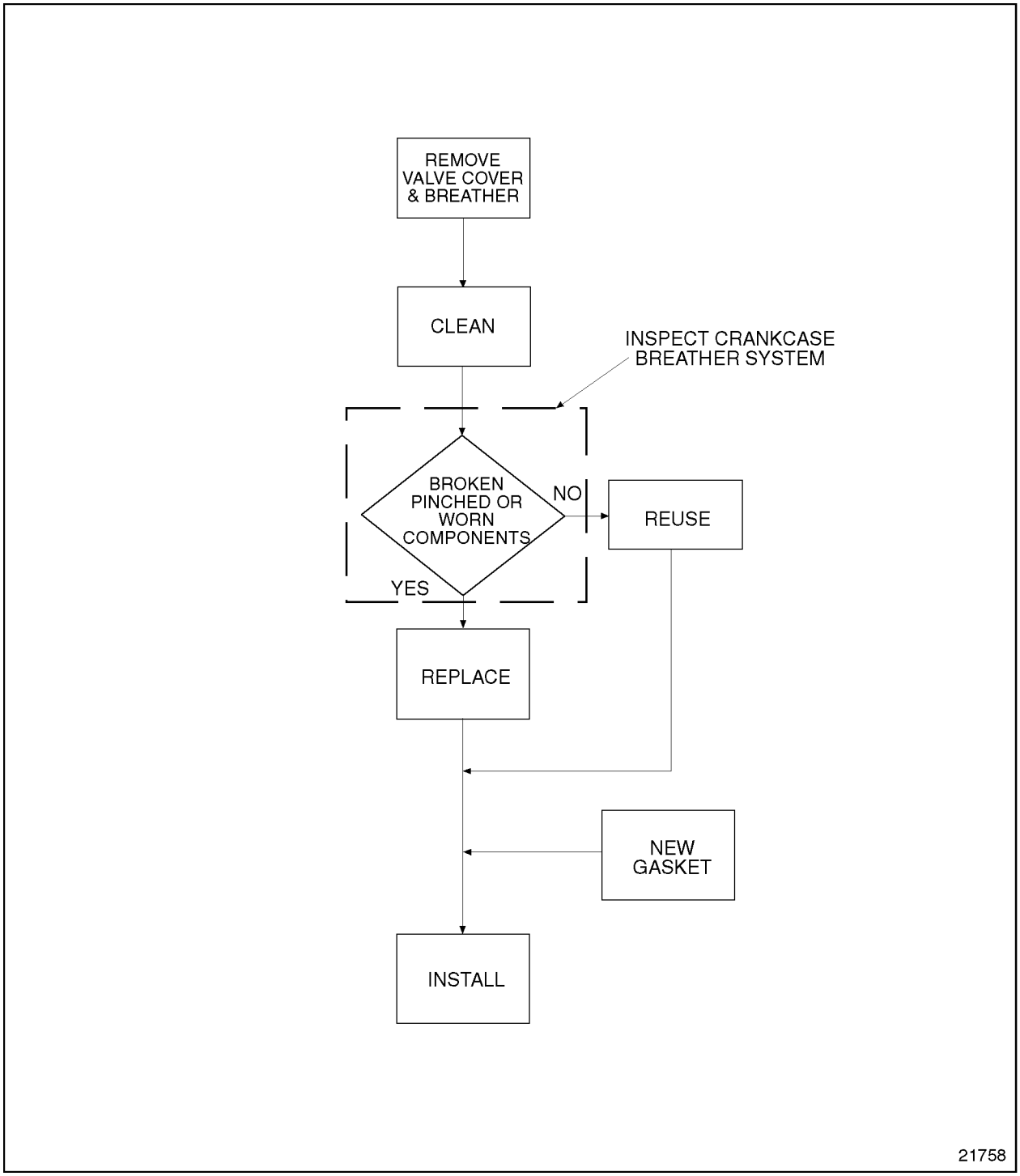

Figure 3-44 Flowchart for Repair or Replacement of Ventilating System

 Copyright © 2004 DETROIT DIESEL CORPORATION

3.12.2 Removal of Ventilating System

Precleaning is not necessary.

Remove ventilating system as follows:

1. Remove the valve cover. Refer to section 1.6.2 for one-piece, refer to section 1.6.3 for two-piece, and refer to section 1.6.5 for three-piece rocker cover.
2. If the engine is equipped with a gear case cover breather, remove as follows:
   [a] Remove the five bolts that secure the breather-oil fill housing to the gear case cover. See Figure 3-45.

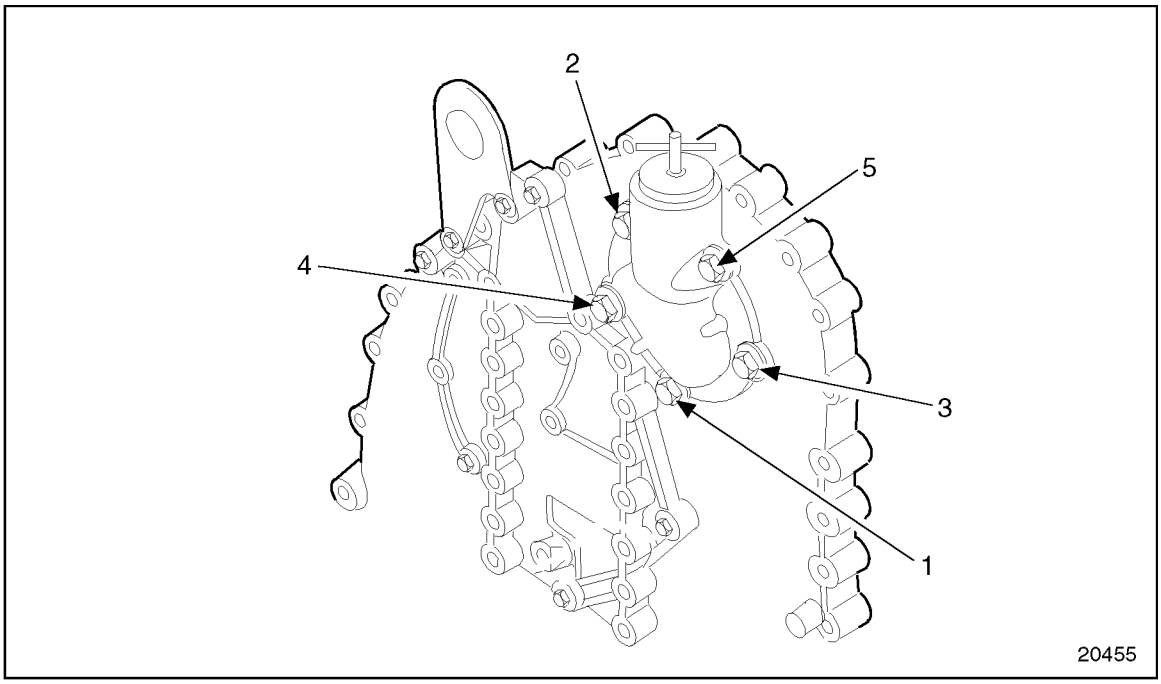

Figure 3-45 Breather-Oil Fill Housing Bolt Location

(Rev. 2004) *All information subject to change without notice.*
6SE483 0401 Copyright © 2004 DETROIT DIESEL CORPORATION

[b] Remove the three bolts that secure the retainer to the housing. See Figure 3-46.

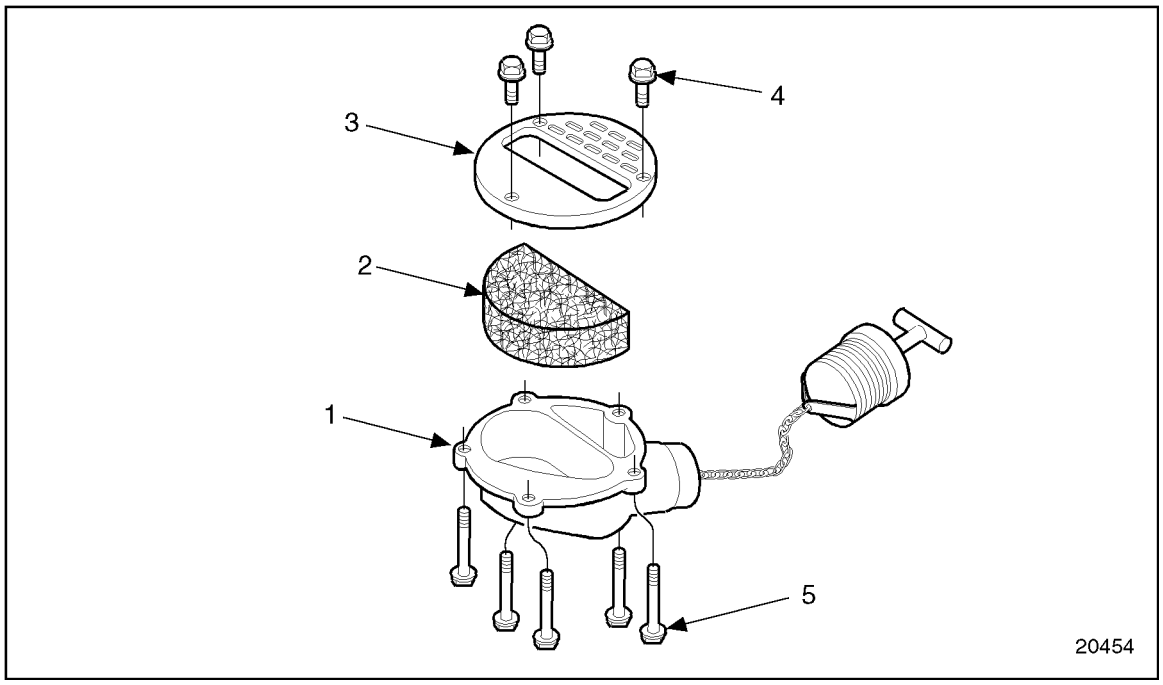

1. Breather Housing
2. Wire Mesh Element
3. Retainer
4. Bolts (3)
5. Bolts (5)

Figure 3-46 Gear Case Cover-Mounted Breather Housing

[c] Remove the retainer and wire mesh element from the breather housing.

 Copyright © 2004 DETROIT DIESEL CORPORATION

3. If the engine is equipped with a breather mounted on the housing, remove as follows:

   [a] Remove the three screws, baffle, and end retainer on the breather housing. See Figure 3-47.

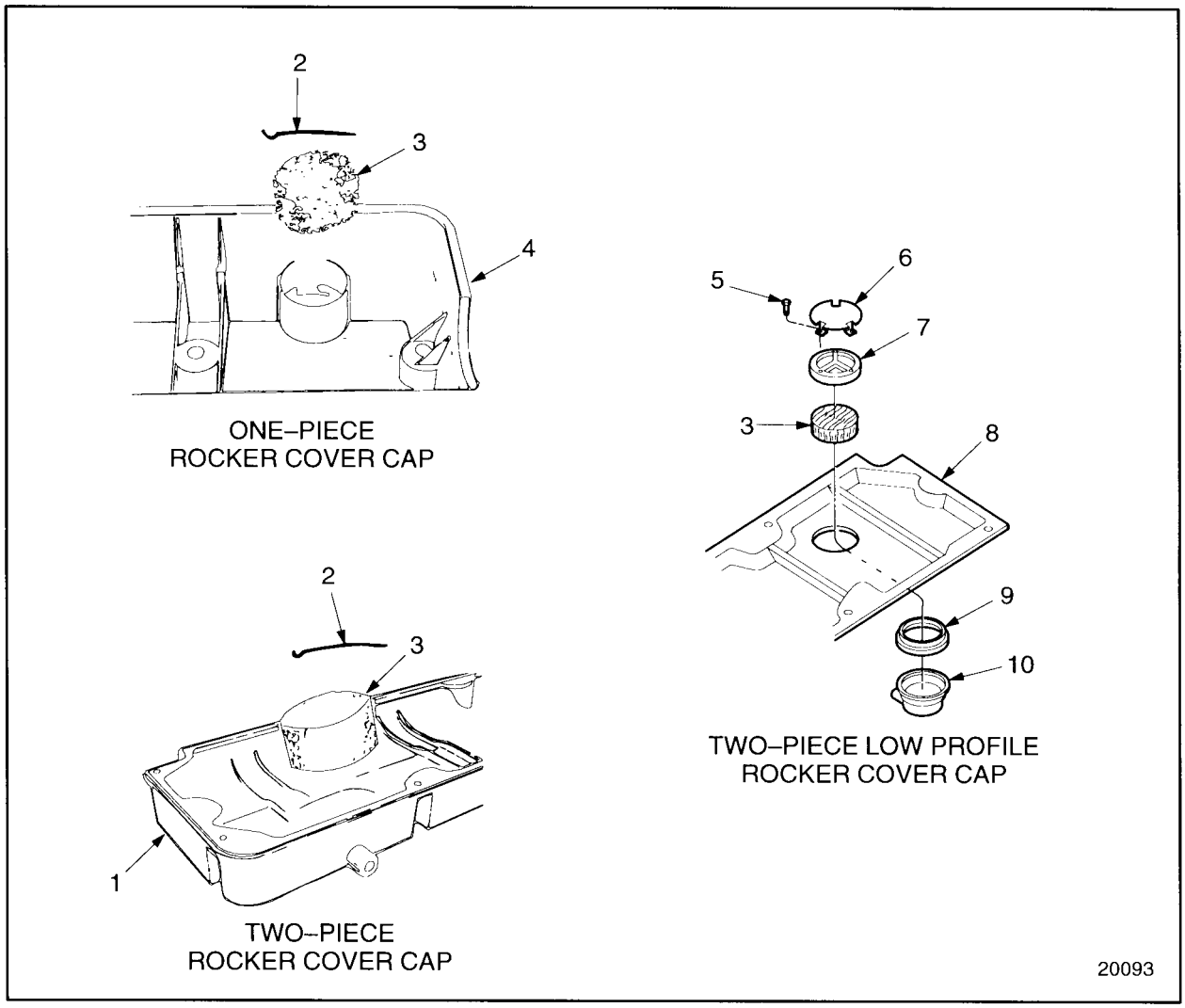

1. Two-piece Valve Rocker Cover
2. Retainer Clip
3. Wire Mesh Element
4. One-piece Rocker Cover
5. Screws
6. Baffle
7. Retainer
8. Rocker Cover Cap
9. Seal
10. Breather Housing

Figure 3-47 Breather Housing-Mounted Breather

   [b] Remove the breather housing seal and wire mesh element.

(Rev. 2004) *All information subject to change without notice.*
6SE483 0401 Copyright © 2004 DETROIT DIESEL CORPORATION

4. If the engine is equipped with a valve cover mounted breather, remove as follows:
   [a] Press the center of the spring steel retaining clip outward and disengage the straight end from the valve cover. Rotate the clip upward and remove clip.
   [b] Remove the wire mesh element from the valve cover.

3.12.2.1 Inspection of Ventilating System

Inspect the ventilating system as follows:

1. Inspect the ventilating system for damaged parts. Check components for pinched, broken, worn, and unclean parts.
   [a] If any components are damaged, replace with new parts.
   [b] If components are not damaged, reuse the parts.

3.12.3 Cleaning the Ventilating System

Clean the wire mesh element components prior to inspection as follows:

1. Wash the components in clean fuel oil.

CAUTION:

To avoid injury from flying debris when using compressed air, wear adequate eye protection (face shield or safety goggles) and do not exceed 40 psi (276 kPa) air pressure.

2. Blow dry with compressed air.

 Copyright © 2004 DETROIT DIESEL CORPORATION

3.12.4 Installation of Ventilating System

Install the ventilating system as follows:

1. Install the gear case cover mounted breather as follows:
   [a] Install the wire mesh element in breather housing.
   [b] Install the three screws and retainer to breather housing. Torque the screws to 2.5 N·m (22 lb·in.).
   [c] Install new gasket, breather and oil fill housing and five bolts on gear case cover. Torque bolts to 30-38 N·m (22-28 lb·ft), using the proper torque sequence. See Figure 3-45.
2. Install the breather housing mounted breather as follows:
   [a] Install the wire mesh element in breather housing.
   [b] Install breather housing in valve cover.
   [c] Install retainer on valve cover.
   [d] Place the baffle on the retainer with three flat bolting flanges against the retainer.

NOTE:
The baffle must be installed with bolting flanges against the retainer to permit proper engine breathing.

   [e] Install the three screws into baffle and torque to 2.5 N·m (22 lb·in.).
3. Install the valve cover mounted breather as follows:
   [a] Install wire mesh element in valve cover.
   [b] Install retaining clip in valve cover by engaging curved end in valve cover and then engaging straight end.
4. Install valve covers. Refer to section 1.6.8 for one-piece, refer to section 1.6.9 for two-piece or three-piece valve rocker cover.

(Rev. 2004) *All information subject to change without notice.*
6SE483 0401 Copyright © 2004 DETROIT DIESEL CORPORATION

3.A ADDITIONAL INFORMATION

Description **Page**

SPECIFICATIONS 3-96
Torque Specification Exceptions - Fasteners 3-96

 Copyright © 2004 DETROIT DIESEL CORPORATION

SPECIFICATIONS

This section contains the exceptions to the fastener torque specifications.

Torque Specification Exceptions - Fasteners

The proper bolt and nut torque is dependent on its size. The proper torque for metric nuts and bolts are listed in Table 1-36 in the "General Information" section. The exceptions to standard fastener is listed in Table 3-1.

FASTENER	SIZE	Torque, N·m (lb·ft)
Bolt, Oil Pan-to-Block	M10 x 1.5	24-30 (18-22)

Table 3-1 Exceptions To Standard Fastener Torque Specifications

(Rev. 2004) *All information subject to change without notice.*
6SE483 0401 Copyright © 2004 DETROIT DIESEL CORPORATION

4 COOLING SYSTEM

Section		Page
4.1	COOLING SYSTEM OVERVIEW	4-3
4.2	WATER PUMP (GEAR CASE MOUNTED - 1991 AND LATER) (GCM)	4-11
4.3	WATER PUMP (FRONT MOUNTED) (FM)	4-43
4.4	CHARGE AIR COOLER RAW WATER PUMP (KEEL-COOLED COMMERCIAL MARINE)	4-72
4.5	THERMOSTAT	4-80
4.6	COOLANT PRESSURE CONTROL CAP	4-92
4.7	ENGINE COOLING FAN	4-96
4.8	COOLANT FILTER AND CONDITIONER	4-106
4.9	RADIATOR	4-108
4.10	KEEL COOLING SYSTEM (COMMERCIAL MARINE)	4-109
4.11	HEAT EXCHANGER COOLING SYSTEM (PLEASURE CRAFT MARINE)	4-110
4.12	HEAT EXCHANGER (PLEASURE CRAFT MARINE)	4-112
4.13	JABSCO® ENGINE COOLING RAW WATER PUMP (MARINE)	4-128
4.A	ADDITIONAL INFORMATION	4-143

 Copyright © 2004 DETROIT DIESEL CORPORATION

4.1 COOLING SYSTEM OVERVIEW

The cooling system consists of the following components (see Figure 4-1):

- ☐ Water pump
- ☐ Pressure control cap
- ☐ Thermostat
- ☐ Engine cooling fan
- ☐ Coolant filter and conditioner
- ☐ Radiator or heat exchanger
- ☐ Charge air cooler raw water pump

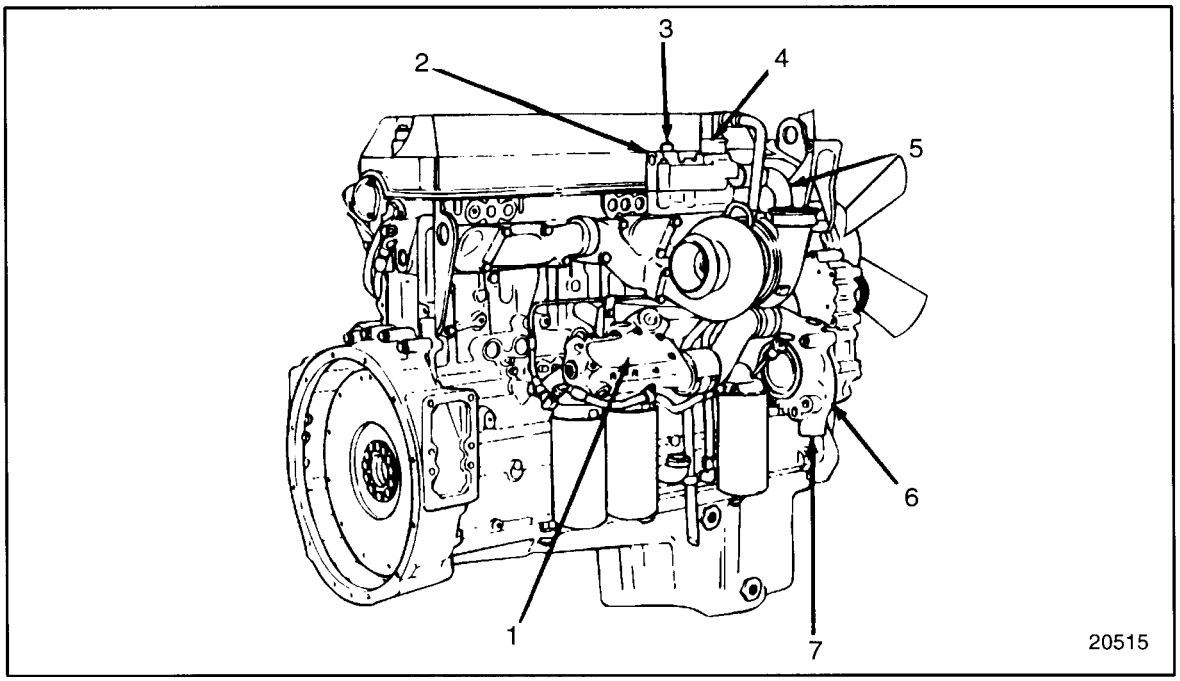

1. Oil Cooler Housing
2. Thermostat Housing
3. Vent Line Outlet
4. Water Outlet (To Radiator)
5. Water Bypass Tube
6. Water Pump
7. Water Inlet

Figure 4-1 Cooling System Components

 Copyright © 2004 DETROIT DIESEL CORPORATION

An OEM supplied radiator along with a factory installed and thermo-modulated fan are used to effectively dissipate the heat generated by the engine. A centrifugal-type water pump is used to circulate the engine coolant.

Two full blocking-type thermostats are used in the water outlet passage to control the flow of coolant, providing fast engine warm-up and regulating coolant temperature. Listed in Table 11-2 are the normal cooling system operational parameters.

The pressurized engine coolant is drawn from the lower portion of the radiator by the water pump and is forced through the oil cooler and into the cylinder block. See Figure 4-2.

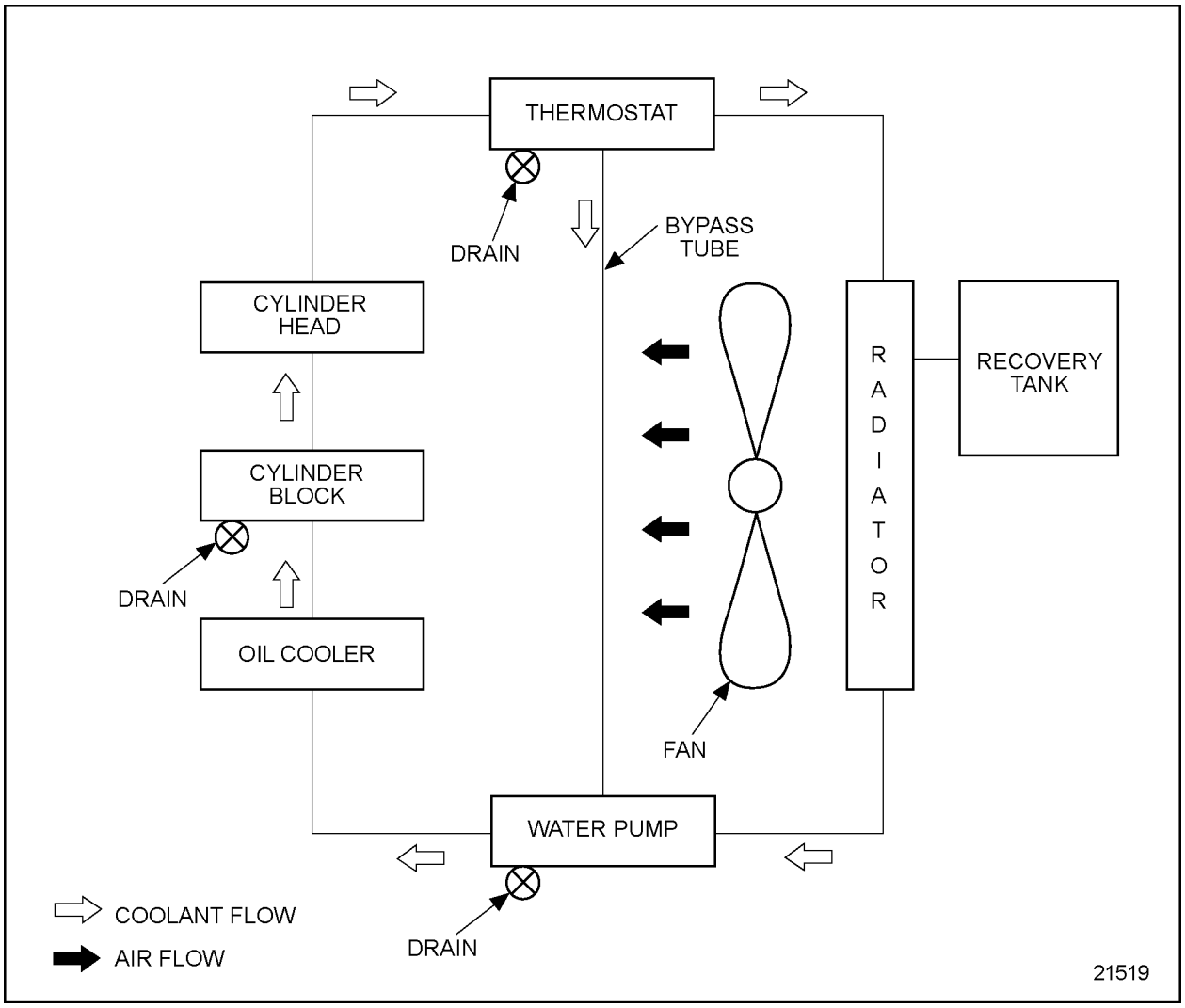

Figure 4-2 Coolant Flow Schematic for Vehicle and Industrial Engines

(Rev. 2004) *All information subject to change without notice.*
6SE483 0401 Copyright © 2004 DETROIT DIESEL CORPORATION

On marine engines, coolant from the fresh water pump flows through the engine in three circuits: Coolant flowing into the oil cooler passes through the cylinder block, the cylinder head, and the thermostat housing before moving on to the heat exchanger. See Figure 4-3 and see Figure 4-4. Coolant going to the water-cooled exhaust manifold flows directly back to the thermostat housing and then into the heat exchanger, where it is cooled. Coolant going to the water-cooled turbocharger flows into the bypass (rapid warm-up) cooling circuit and back to the pump.

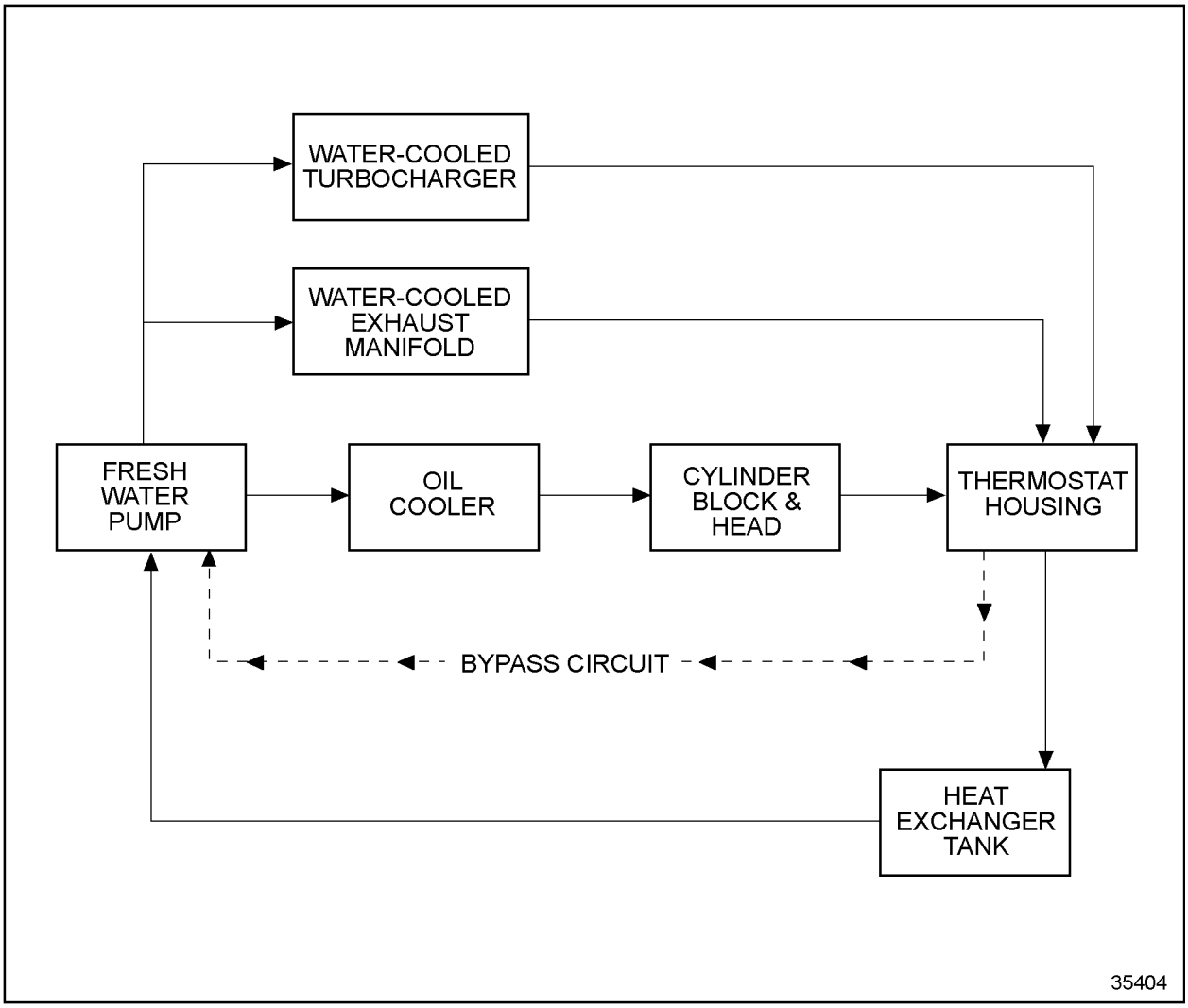

Figure 4-3 **Coolant Flow Schematic for Heat Exchanger-Cooled Marine Engine**

 Copyright © 2004 DETROIT DIESEL CORPORATION

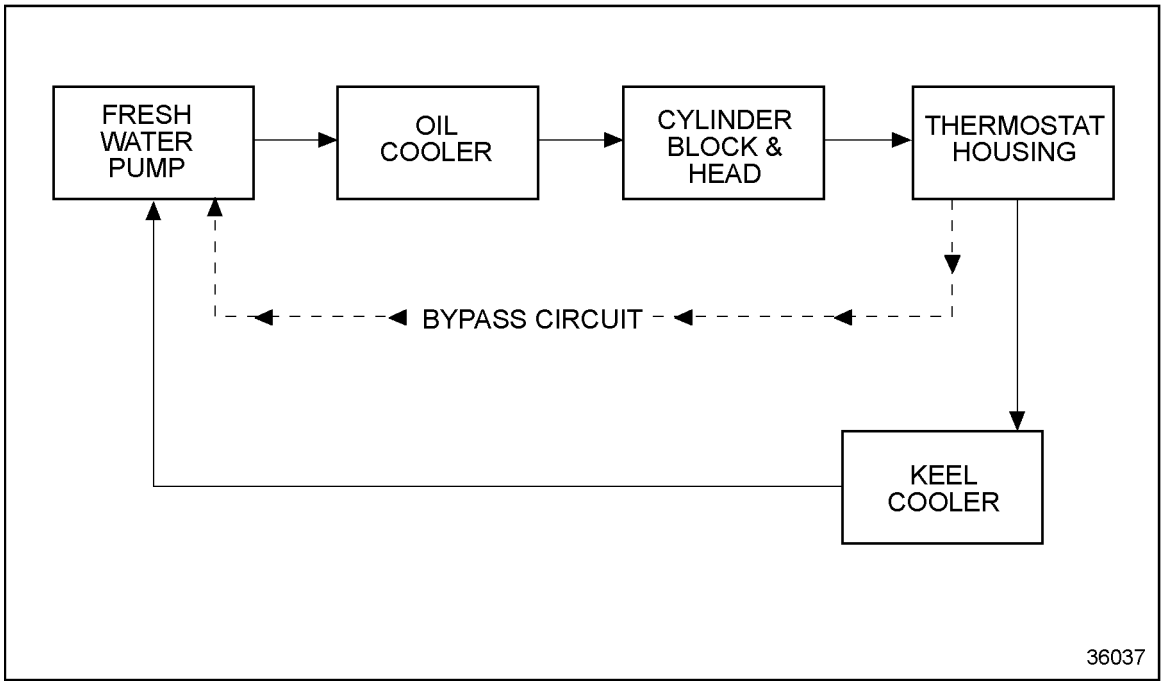

Figure 4-4 Coolant Flow Schematic for Keel-Cooled Marine Engine

(Rev. 2004) *All information subject to change without notice.*
6SE483 0401 Copyright © 2004 DETROIT DIESEL CORPORATION

On keel-cooled marine engines, fresh water coolant flow is similar to the flow on vehicle engines, except that it passes through a keel cooler instead of a radiator. See Figure 4-5 and see Figure 4-6.

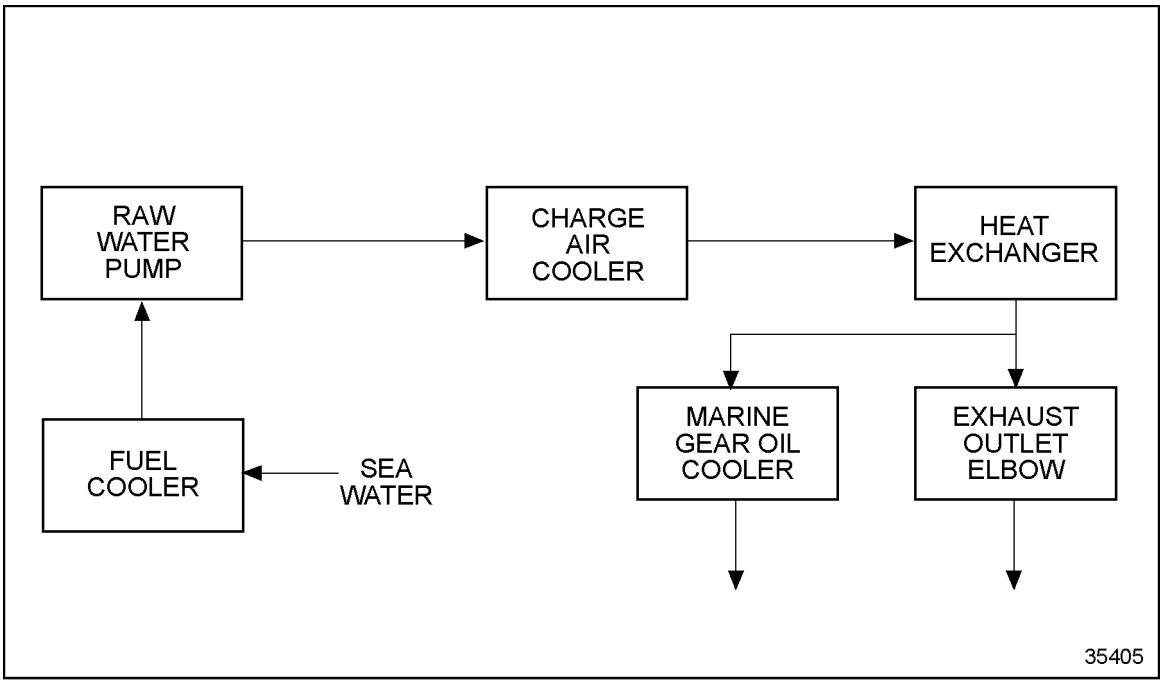

Figure 4-5 Raw Water Flow on Heat Exchanger-Cooled Marine Engine

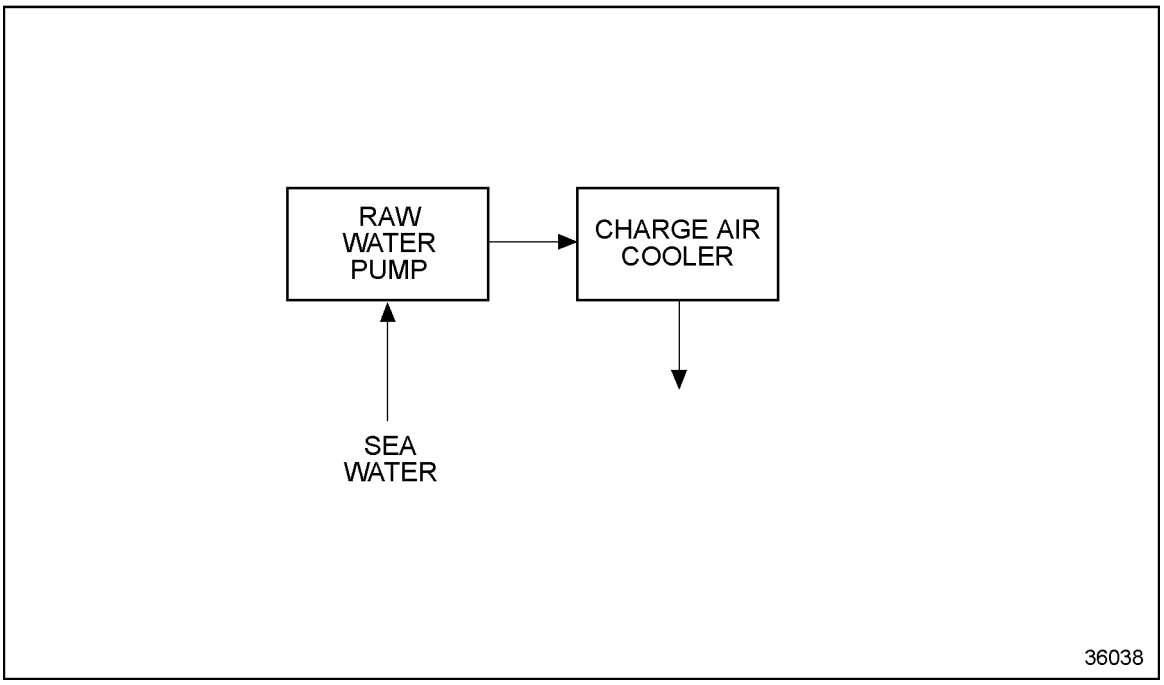

Figure 4-6 Raw Water Flow on Keel-Cooled Marine Engine

 Copyright © 2004 DETROIT DIESEL CORPORATION

When the engine is at normal operating temperature, the coolant passes from the cylinder block up through the cylinder head, through the thermostat housing and into the upper portion of the radiator. The coolant then passes through a series of tubes where the coolant temperature is lowered by the airflow created by the revolving fan and the motion of the vehicle.

Upon starting a cold engine or when the coolant is below operating temperature, the closed thermostats direct coolant flow from the thermostat housing through the bypass tube to the water pump. Coolant is recirculated through the engine to aid engine warm-up. When the thermostat opening temperature is reached, coolant flow is divided between the radiator inlet and the bypass tube. When the thermostats are completely open, all of the coolant flow is to the radiator inlet.

The function of the engine coolant is to absorb the heat, developed as a result of the combustion process in the cylinders, from component parts such as the valves and pistons which are surrounded by water jackets. In addition, the heat absorbed by the oil is also removed by the engine coolant in the oil-to-water oil cooler. Coolant recommendations for the Series 60 engine are listed in Table 11-2.

A pressurized cooling system permits higher temperature operation than a non-pressurized system. It is essential that the cooling system is kept clean and leak-free, that the filler cap and pressure relief mechanisms are properly installed and operate correctly, and that the coolant level is properly maintained.

(Rev. 2004) *All information subject to change without notice.*
6SE483 0401 Copyright © 2004 DETROIT DIESEL CORPORATION

As the engine temperature increases, the coolant and air in the system starts to expand and build pressure. The valve in the radiator pressure cap unseats and allows the coolant to flow into the coolant recovery tank. See Figure 4-7.

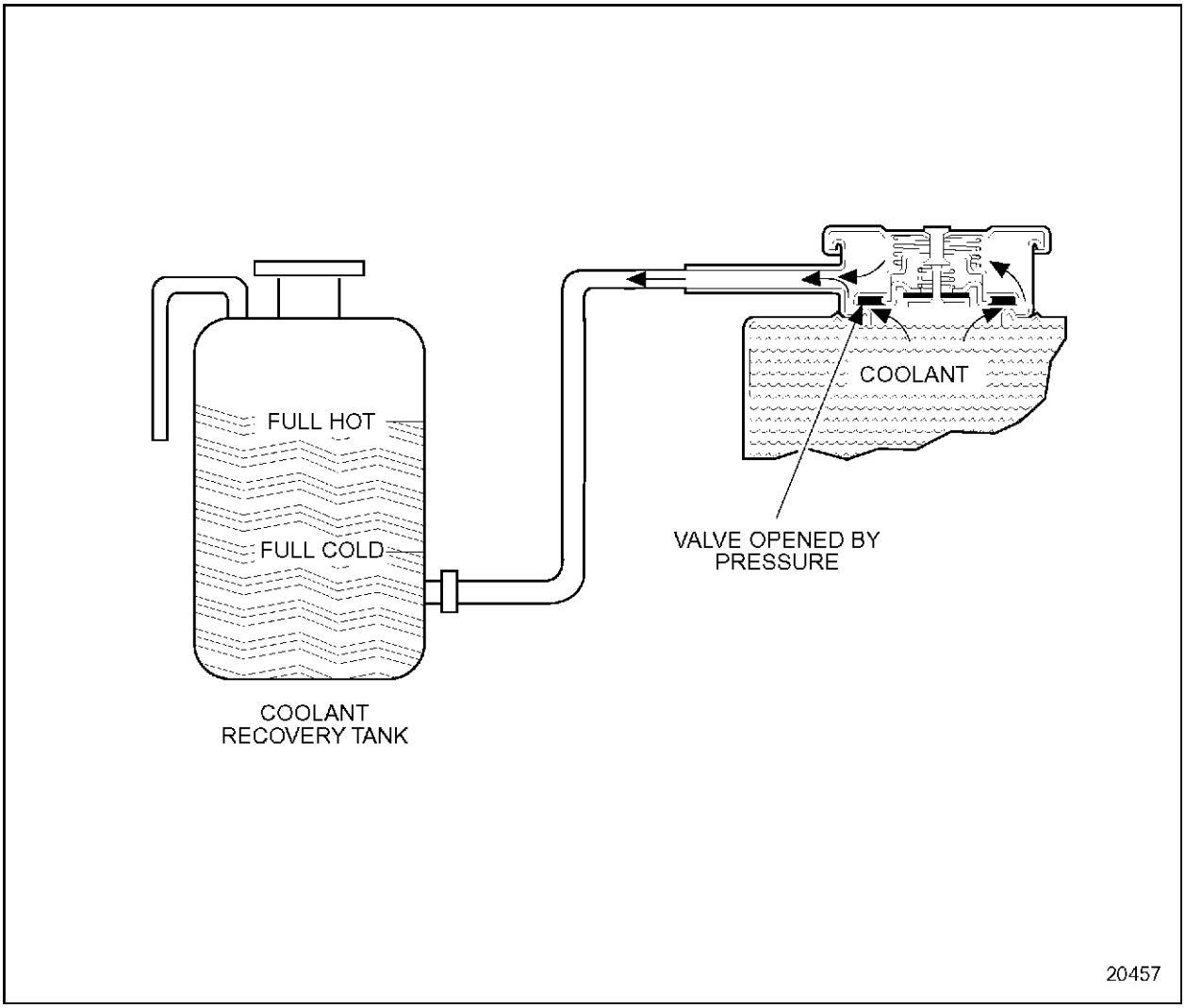

Figure 4-7 Coolant Expansion

 Copyright © 2004 DETROIT DIESEL CORPORATION

When the engine starts to cool down, the air and coolant contract, causing a void and creating a vacuum in the system. The vacuum unseats another valve in the pressure cap, allowing the coolant to flow back into the expansion tank, radiator or heat exchanger tank. See Figure 4-8.

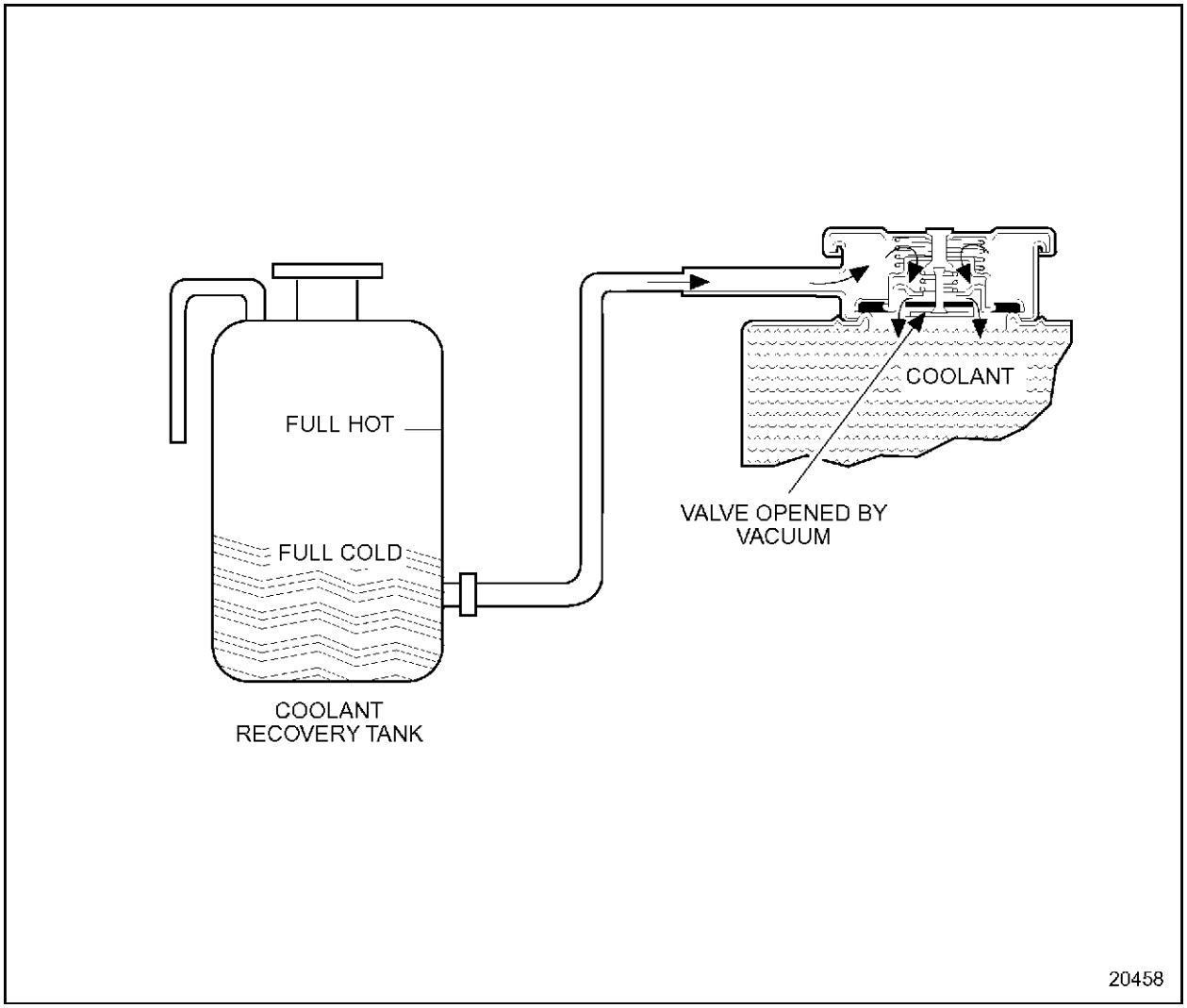

Figure 4-8 Coolant Recovery

(Rev. 2004) *All information subject to change without notice.*
6SE483 0401 Copyright © 2004 DETROIT DIESEL CORPORATION

4.2 WATER PUMP (GEAR CASE MOUNTED - 1991 AND LATER) (GCM)

The centrifugal-type water pump circulates the engine coolant through the cooling system.

The pump is mounted on the rear of the gear case on units built after 6R37023, engines and is driven by the water pump drive gear. See Figure 4-9. The water pump drive gear meshes with the bull gear. The pump was mounted on the front of the gear case cover on units built prior to and including 6R37023. See Figure 4-36 Refer to section 4.3

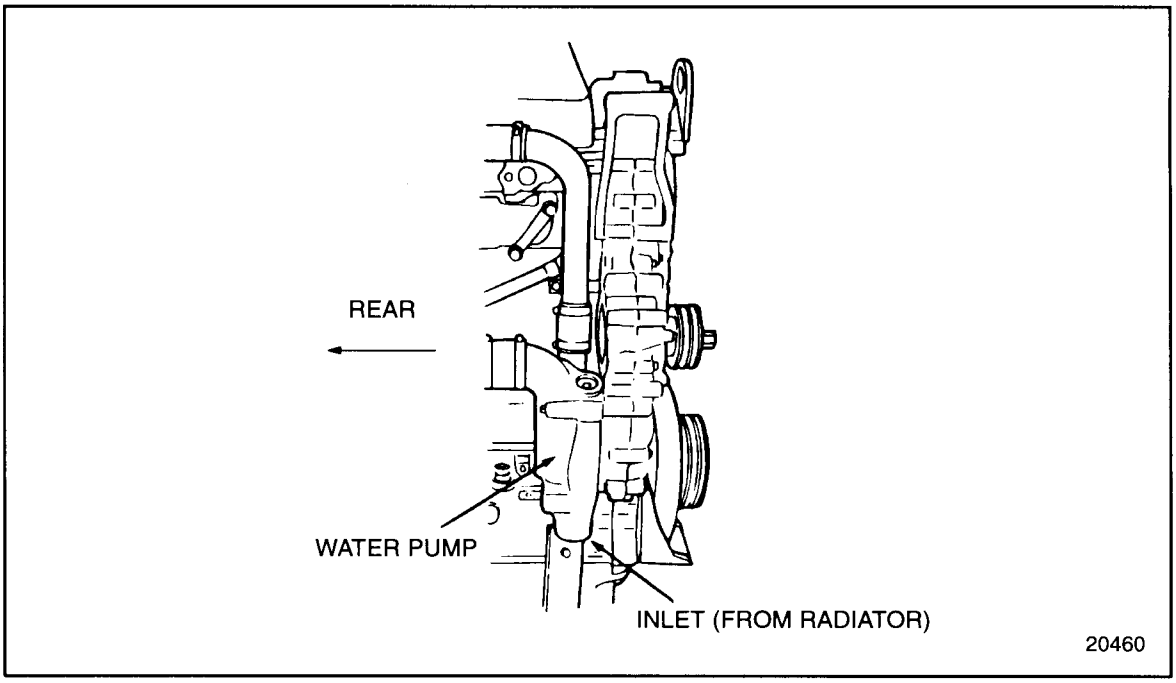

Figure 4-9 Water Pump Mounting (1991 and Later Model)

An impeller is pressed on one end of the stainless steel drive shaft. The other end of this shaft has internal threads, and a retaining bolt secures the water pump drive gear to the shaft. Two tappered roller bearing assemblies are used to support the shaft. See Figure 4-10.

An O-ring, located in a groove in the water pump housing, seals the water pump to the gear case. An O-ring, located under the water pump cover, seals the cover to the water pump housing. The water pump bearings are lubricated by splash oil through a passage from the front of the pump housing.

An oil seal is located behind the bearing assemblies, and a unitized, spring-loaded, face-type water seal is used behind the impeller. This seal prevents water from leaking down the shaft and into the gear case. It also prevents lubricating oil from entering the cooling system. The water and oil seals cannot be replaced without removing the water pump from the engine.

 Copyright © 2004 DETROIT DIESEL CORPORATION

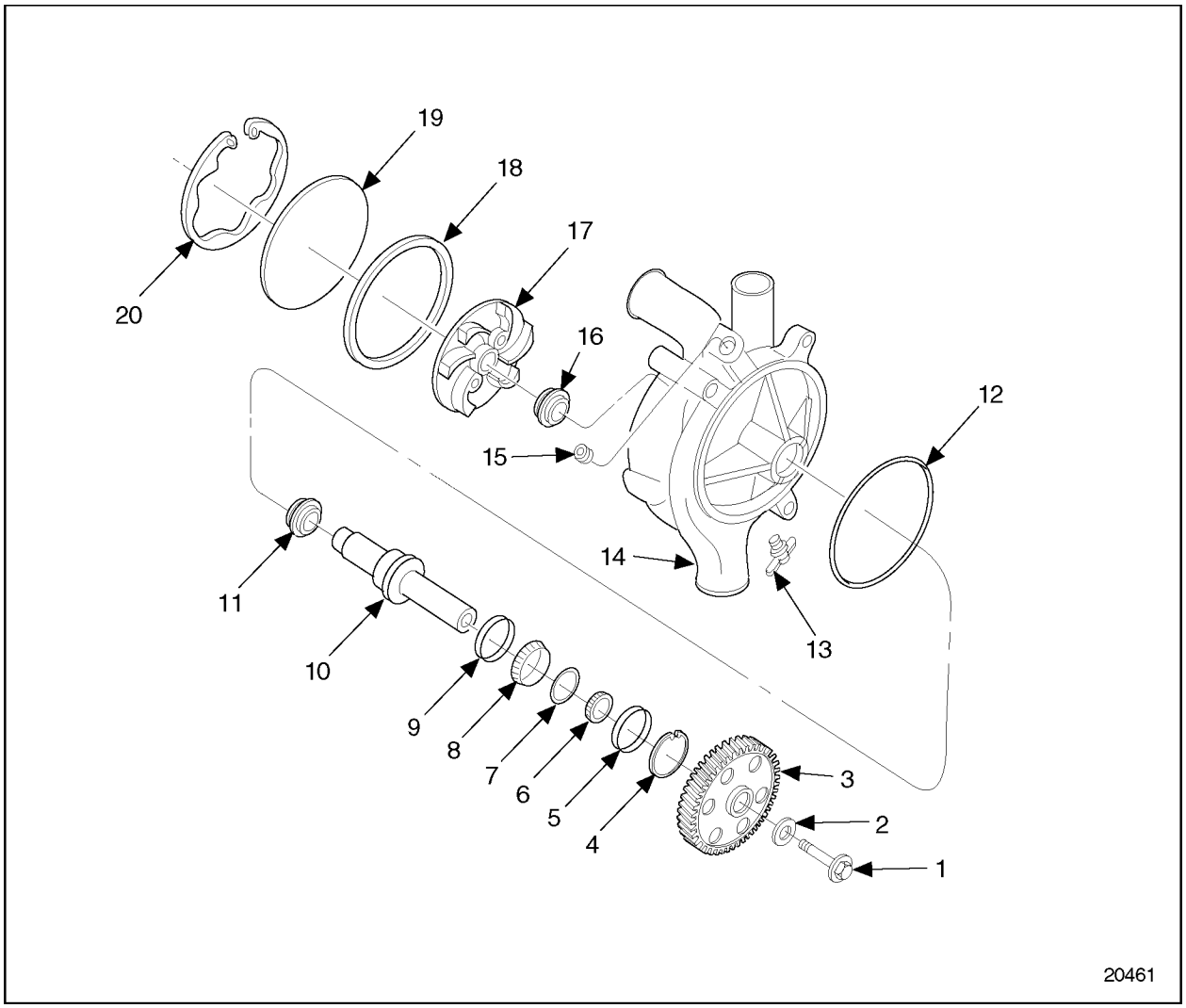

1. Retaining Bolt
2. Washer
3. Gear, Water Pump Drive
4. Snap Ring
5. Bearing Race
6. Roller Bearing, Small
7. Spacer Rings (2)
8. Roller Bearing, Large
9. Bearing Race
10. Drive Shaft
11. Oil Seal
12. O-ring Seal
13. Drain Cock
14. Housing, Water Pump
15. Pipe Plug, Water Pump Housing
16. Water Seal
17. Impeller
18. O-ring, Water Pump Cover
19. Water Pump Cover
20. Snap Ring, Water Pump Cover

Figure 4-10 Water Pump Details and Relative Location of Parts (Gear Case Mounted (GCM)

(Rev. 2004) *All information subject to change without notice.*
6SE483 0401 Copyright © 2004 DETROIT DIESEL CORPORATION

4.2.1 Repair or Replacement of Water Pump (GCM)

To determine if repair or replacement is necessary, perform the following procedure. See Figure 4-11.

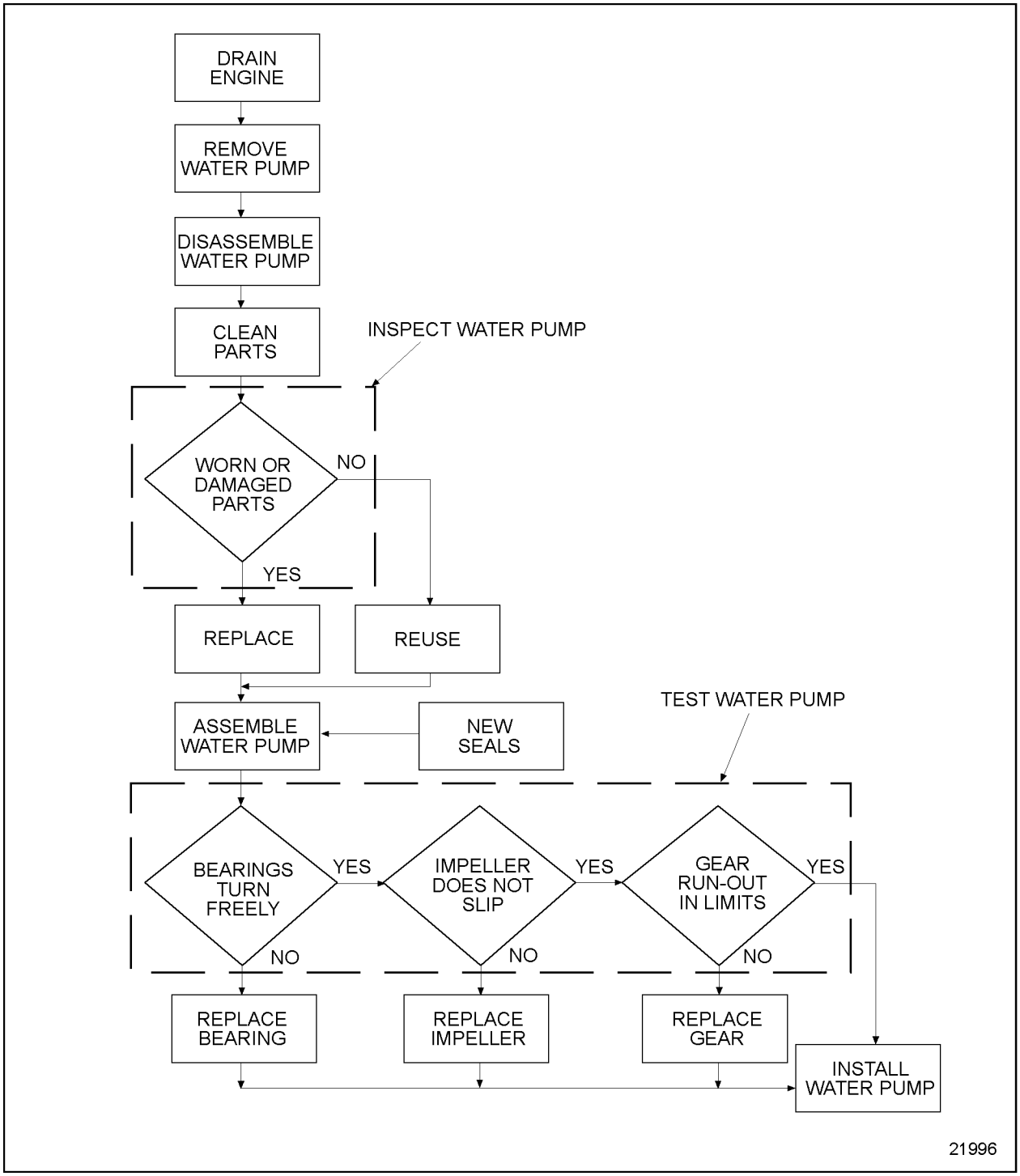

Figure 4-11 Flowchart for Repair or Replacement of Water Pump (GCM)

 Copyright © 2004 DETROIT DIESEL CORPORATION

4.2.2 Draining and Removal of Water Pump (GCM)

Drain the cooling system as follows:

Open the drain cocks located at the right rear corner of the engine, at the bottom of the water pump and in the bottom of the thermostat housing.

Remove the water pump as follows:

1. Loosen the hose clamps and remove the coolant hoses from the water pump housing.
2. Loosen and remove the three water pump housing-to-gear case bolts. Remove the water pump from the engine by pulling it straight out of the gear case.

4.2.3 Disassembly of Water Pump (GCM)

Disassemble the water pump as follows:

CAUTION:

To avoid injury from flying parts when working with components under spring tension, wear adequate eye protection (face shield or safety goggles).

1. Remove water pump cover snap ring with snap ring pliers, J 22380 or equivalent. Remove water pump cover and seal ring.

NOTICE:

When clamping gears, use soft jaws on vise to prevent damage to the gear teeth.

2. Clamp the water pump drive gear in a vise, with the impeller facing up. Use a two-screw gear puller and remove the water pump impeller from the shaft, using the two threaded holes in the impeller.

(Rev. 2004) *All information subject to change without notice.*
6SE483 0401 Copyright © 2004 DETROIT DIESEL CORPORATION

3. Hold square end of water pump shaft and remove water pump drive gear retaining bolt and washer. See Figure 4-12.

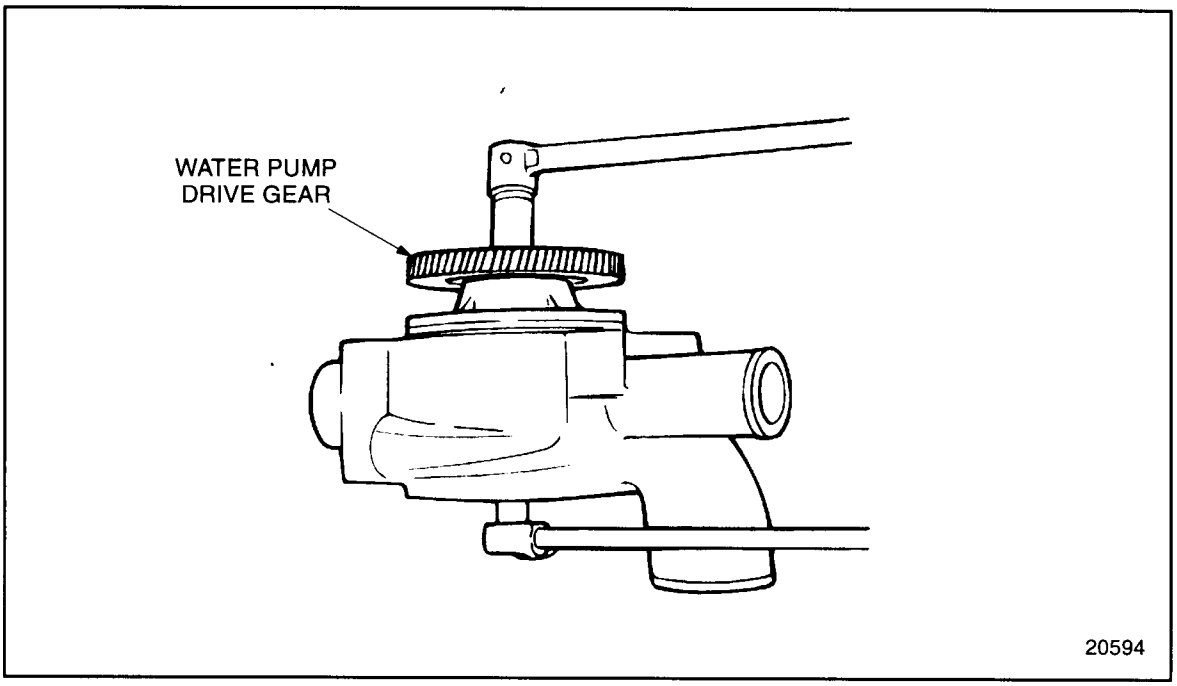

Figure 4-12 Water Pump Drive Gear Retaining Bolt Removal (GCM)

4. Use a two-jaw gear puller to remove the water pump drive gear from the drive shaft.

 Copyright © 2004 DETROIT DIESEL CORPORATION

5. Remove the snap ring from the water pump housing. See Figure 4-13.

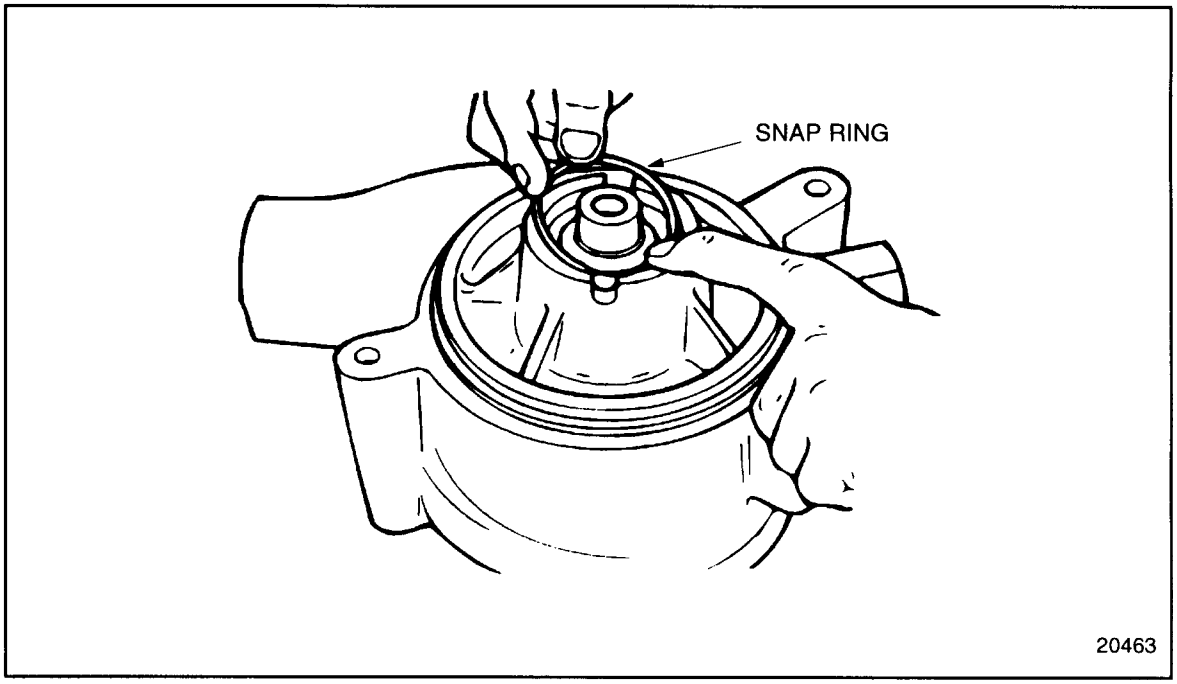

Figure 4-13 Snap Ring Removal (GCM)

6. Support the water pump housing, using steel blocks or plates, to allow at least 76 mm (3in.) of clearance between the pump housing and the press bed.
7. Press the drive shaft and bearings assembly out through the front (engine side) of the water pump housing, until both bearing races are clear of the housing.

NOTE:
Once the bearing assemblies are pressed out of the water pump housing, they must be replaced with new assemblies.

(Rev. 2004) *All information subject to change without notice.*
6SE483 0401 Copyright © 2004 DETROIT DIESEL CORPORATION

NOTICE:

Do not allow brass drift to score housing bore when tapping out seals. A scored bore will cause coolant leaks and can damage engine.

CAUTION:

To avoid injury from chemical burns, wear a face shield and neoprene or PVC gloves when handling fluoroelastomer O-rings or seals that have been degraded by excessive heat. Discard gloves after handling degraded fluoroelastomer parts.

8. Remove both the water and oil seals from the housing using a brass drift and hammer.
9. Support the drive shaft assembly on two steel blocks, at the bearing inner race.

 Copyright © 2004 DETROIT DIESEL CORPORATION

10. Insert J 35988-3A, part of tool set J 35988-D, in end of drive shaft. See Figure 4-14.

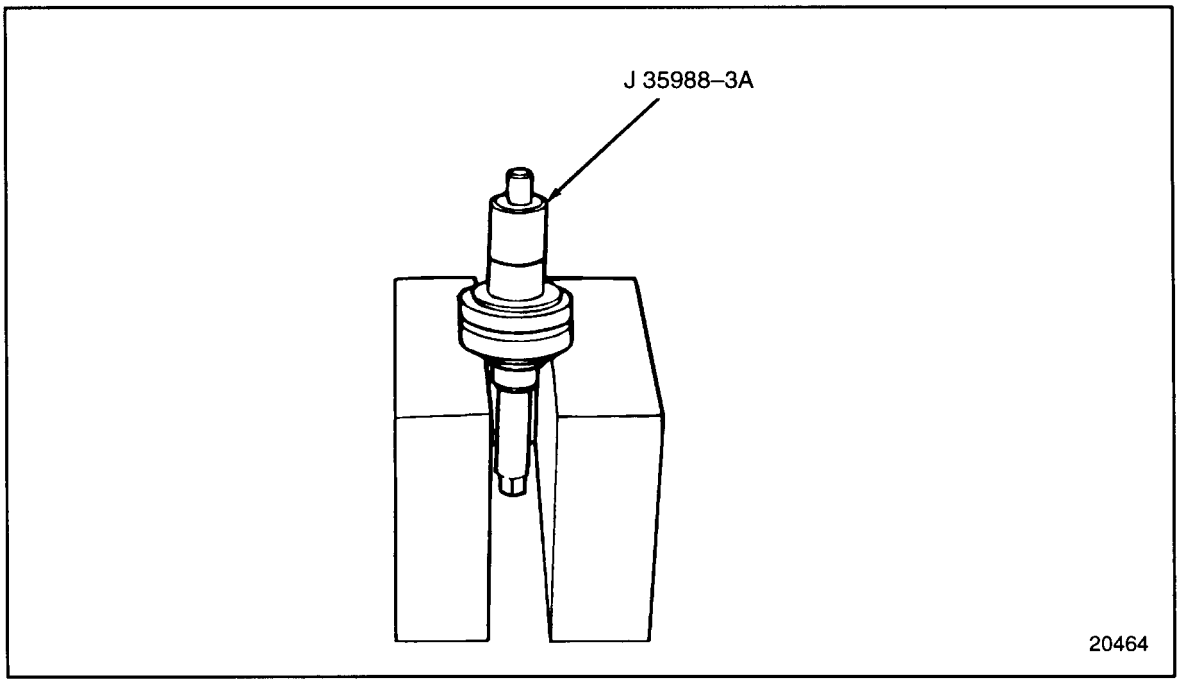

Figure 4-14 Removing Bearing Assemblies

11. Press the drive shaft out until it is clear of both bearing and race assemblies. Discard the used bearings, races and the two spacer rings located between the bearing packs.

(Rev. 2004) *All information subject to change without notice.*
6SE483 0401 Copyright © 2004 DETROIT DIESEL CORPORATION

4.2.3.1 Inspection of Water Pump (GCM)

Inspect the water pump parts as follows:

1. Visually inspect the parts for cracks, wear or other damage.
   [a] If parts are cracked, worn, or other damage is evident, replace damaged or worn parts.
   [b] If no damage is found, reuse remaining components.

4.2.4 Cleaning of Water Pump (GCM)

Clean the water pump as follows:

1. Wash all of the pump parts in clean fuel oil.

CAUTION:

To avoid injury from flying debris when using compressed air, wear adequate eye protection (face shield or safety goggles) and do not exceed 40 psi (276 kPa) air pressure.

2. Dry the parts with compressed air.

 Copyright © 2004 DETROIT DIESEL CORPORATION

4.2.5 Assembly of Water Pump (GCM)

Assemble the water pump as follows:

1. Coat the bearing bores of the water pump housing and the drive shaft bearing surfaces with clean engine oil.

NOTICE:
Although the bearings are identical, the bearings and races are matched parts, and should be installed as they are removed from the box. Parts that are not matched will cause damage to the water pump.

2. Assemble the new bearing packs, as follows:

   [a] Place the small spacer ring on the inner bearing race. See Figure 4-15.

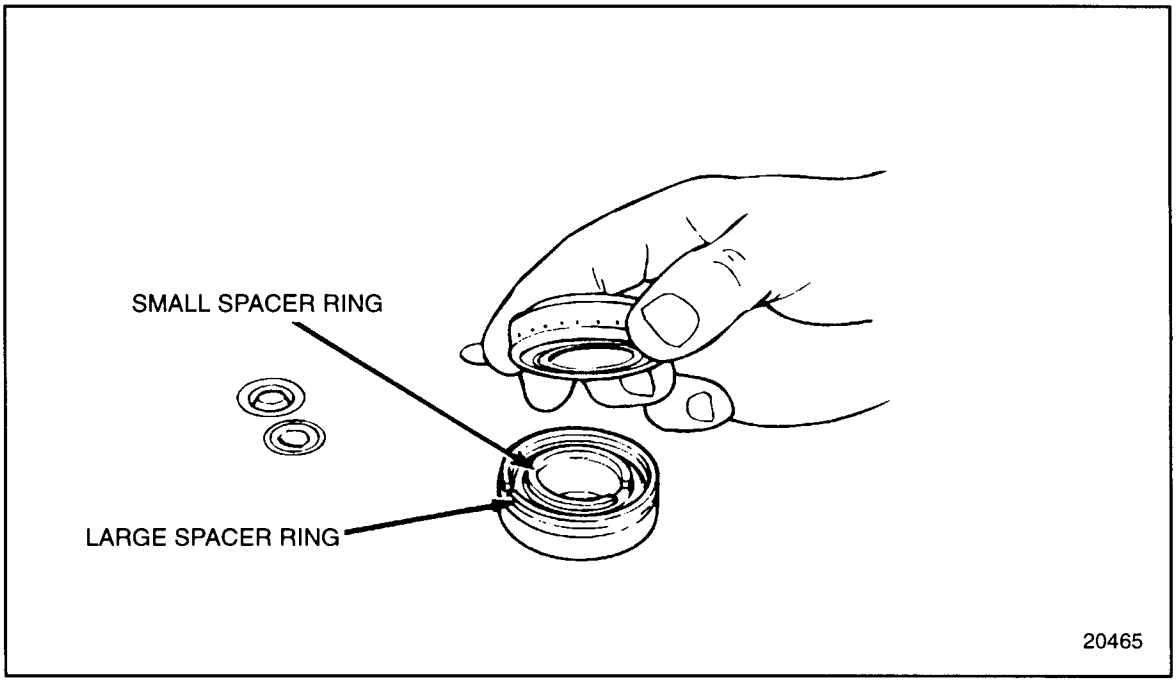

Figure 4-15 Bearing Pack Assembly (GCM)

   [b] Place the larger spacer ring on the outer bearing race.

(Rev. 2004) *All information subject to change without notice.*
6SE483 0401 Copyright © 2004 DETROIT DIESEL CORPORATION

3. Install J 35988-18 into the center of J 35988-2, parts of tool set J 35988-D. See Figure 4-16.

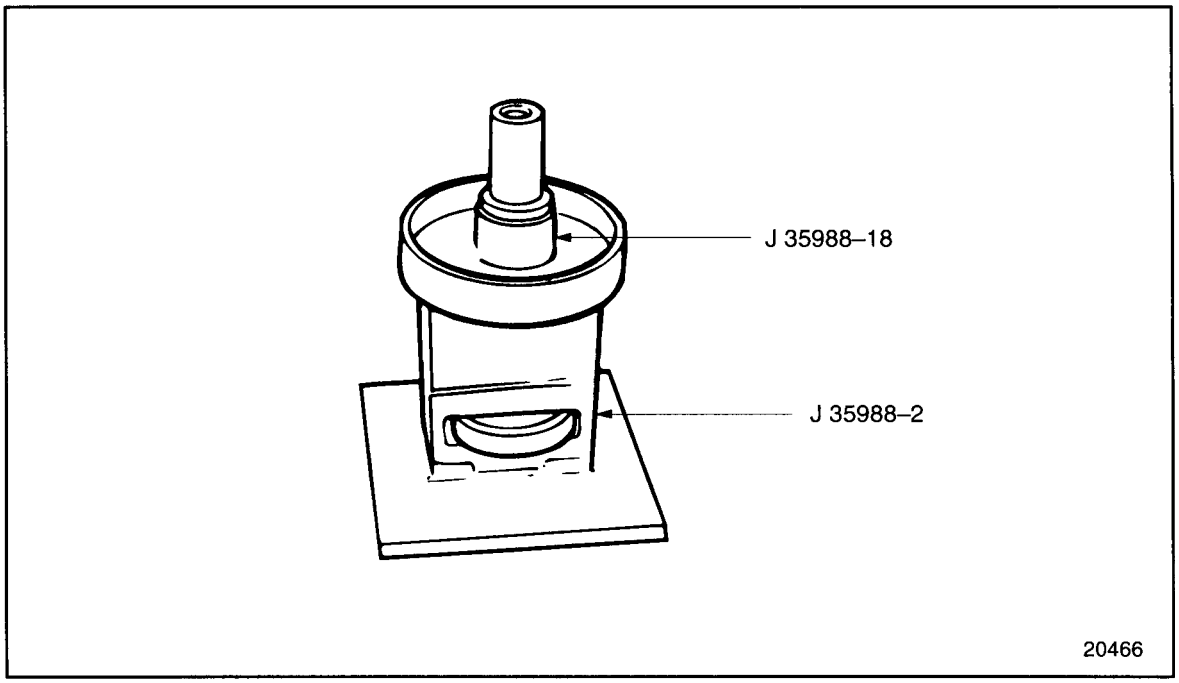

Figure 4-16 Bearing Installation Set-up (GCM)

 Copyright © 2004 DETROIT DIESEL CORPORATION

4. Install J 35988-3A part of tool set J 35988-D, on the end of the water pump shaft. Install the assembled bearing packs to the drive shaft. See Figure 4-17.

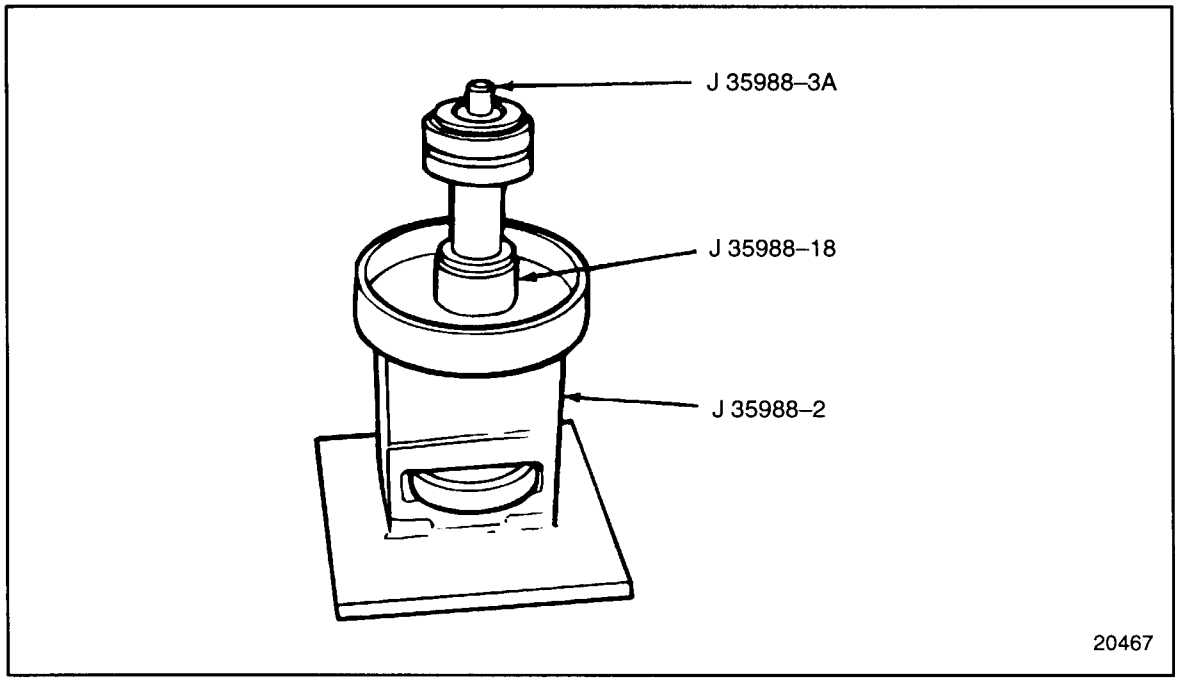

Figure 4-17 Bearing Placement (GCM)

(Rev. 2004) *All information subject to change without notice.*
6SE483 0401 Copyright © 2004 DETROIT DIESEL CORPORATION

5. Center the small end of J 35988-1, part of tool set J 35988-D, on the bearing inner race. Press the bearing pack onto the shaft until it contacts the shoulder of the shaft. Remove the tool used to pilot the bearings. See Figure 4-18.

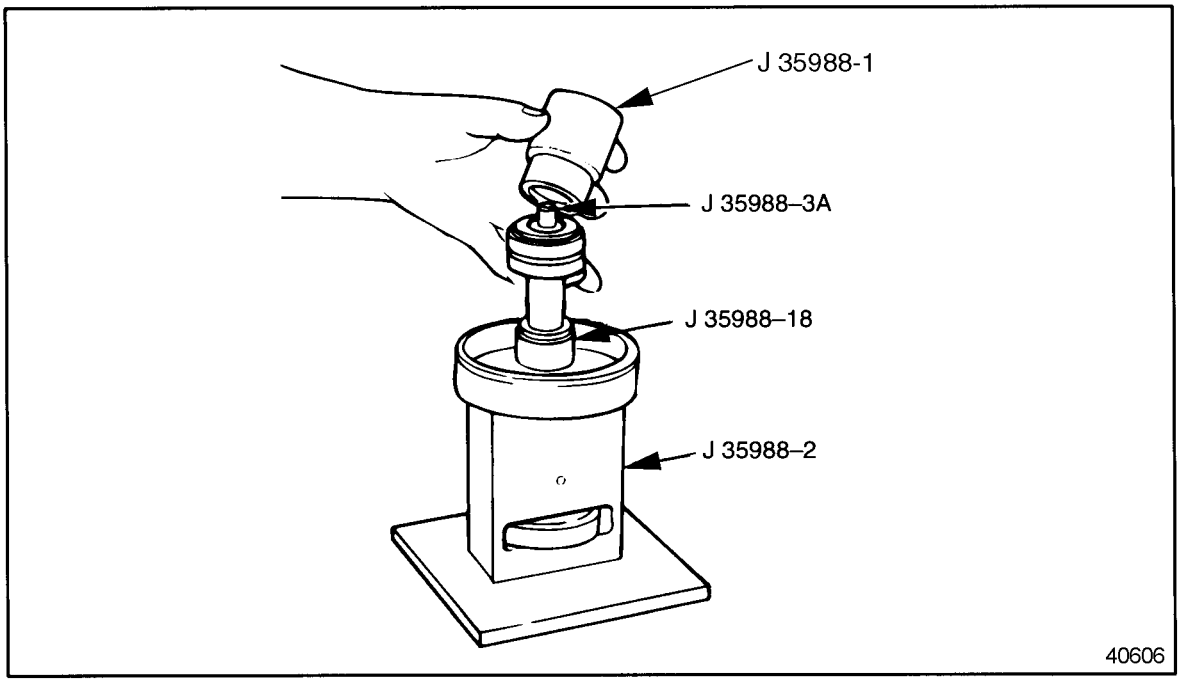

Figure 4-18 Bearing Installation (GCM)

6. Remove the shaft and bearing assembly from the press.

 Copyright © 2004 DETROIT DIESEL CORPORATION

4.2.5.1 Test Bearing Assembly

Test bearing assembly as follows:

1. Turn bearings to ensure they turn freely.
2. If bearings bind, disassemble water pump and replace bearing assembly. Refer to section 4.2.3.

4.2.6 Assembly of Water Pump (GCM) - cont'd

Continue assembling the water pump, as follows:

1. Coat the oil seal contact area of the water pump housing with a thin film of clean engine oil. See Figure 4-19.

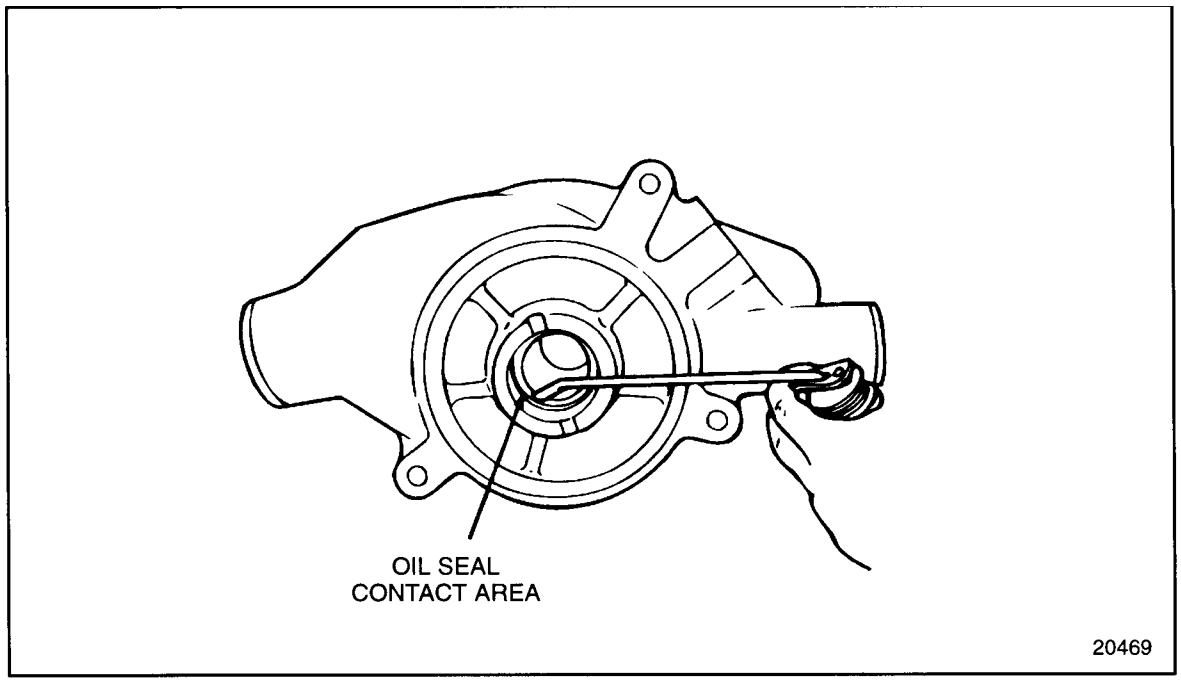

Figure 4-19 Oil Seal Contact Area Lubrication (GCM)

(Rev. 2004) *All information subject to change without notice.*
6SE483 0401 Copyright © 2004 DETROIT DIESEL CORPORATION

2. Install a new oil seal into the water pump housing from the front (gear side). See Figure 4-20.

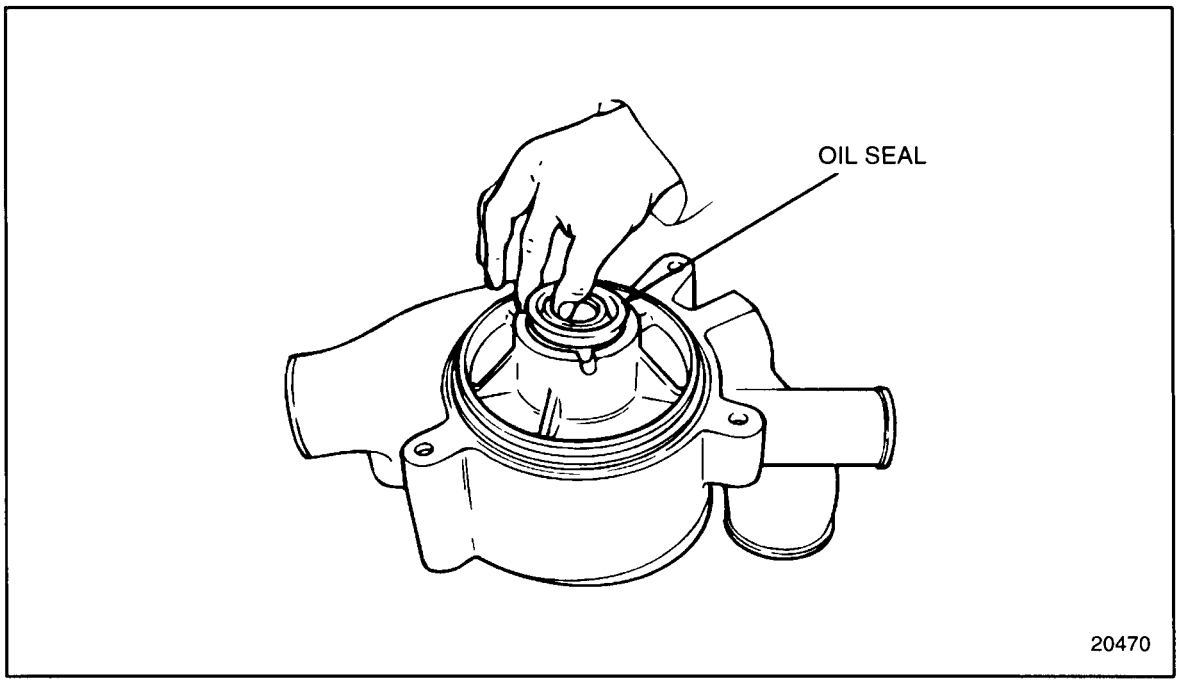

Figure 4-20 Oil Seal Positioning (GCM)

NOTICE:
The contact surface of the oil seal is coated with a special sealant. Do NOT remove this sealant before installing the oil seal. If sealant is removed, leakage can occur.

 Copyright © 2004 DETROIT DIESEL CORPORATION

3. Place the small end of tool J 35988-1, part of tool set J 35988-D, into the water pump housing until it contacts the oil seal. See Figure 4-21.

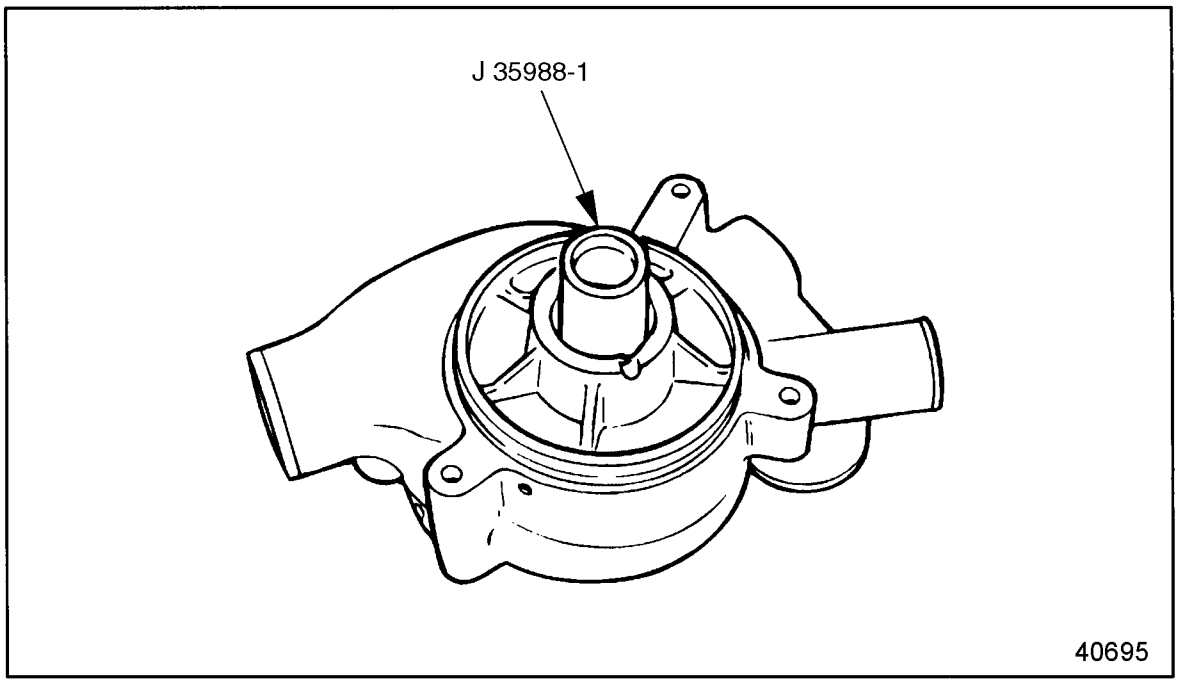

Figure 4-21 Oil Seal Installation (GCM)

(Rev. 2004) *All information subject to change without notice.*
6SE483 0401 Copyright © 2004 DETROIT DIESEL CORPORATION

4. Press the oil seal into the housing until the seal lip is bottomed in the pump housing. Remove the tool J 35988-1, part of tool set J 35988-D.
5. Coat the bearings with clean engine oil.
6. Place the water pump housing, with the gear side up, on a press bed.
7. Install the drive shaft, with bearings installed, to the water pump housing. See Figure 4-22.

NOTE:
During the bearing installation, the water pump housing must be parallel to the press bed or table surface.

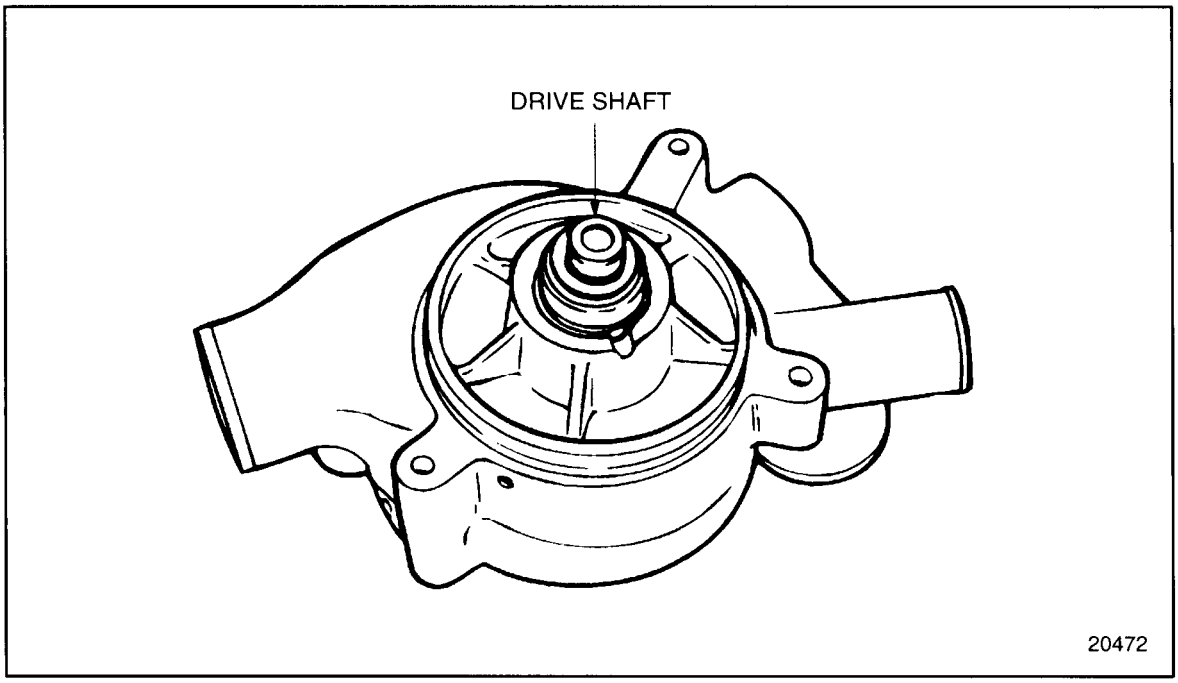

Figure 4-22 Drive Shaft Insertion (GCM)

8. Place the large end of tool J 35988-1, part of tool set J 35988-D, over the drive shaft so that the lip of the tool rests squarely on the outer bearing race. See Figure 4-23.

NOTICE:
The drive shaft must be installed using the outer bearing race only. Any other attempt at installation may damage the bearings.

 Copyright © 2004 DETROIT DIESEL CORPORATION

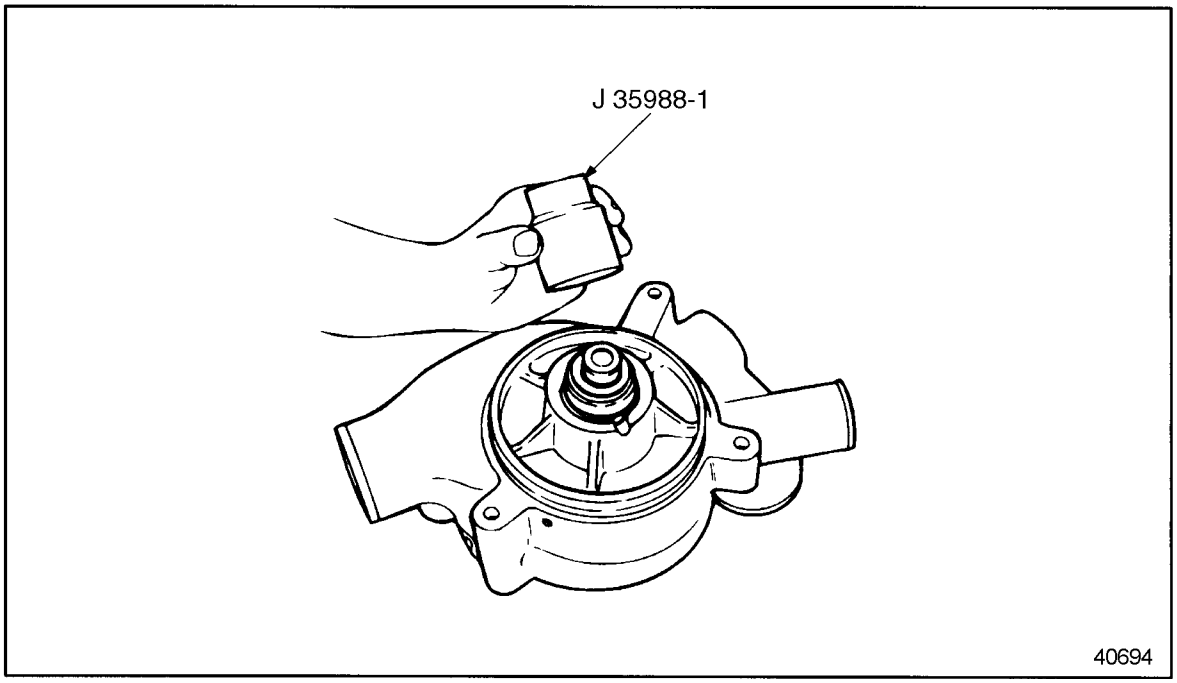

Figure 4-23 Drive Shaft Installation (GCM)

9. Press the drive shaft and bearing assembly into the water pump housing, using tool J 35988-1, part of tool set J 35988-D, until it is seated firmly against the shoulder in the housing.

(Rev. 2004) *All information subject to change without notice.*
6SE483 0401 Copyright © 2004 DETROIT DIESEL CORPORATION

10. Install the snap ring to the water pump housing. See Figure 4-24.

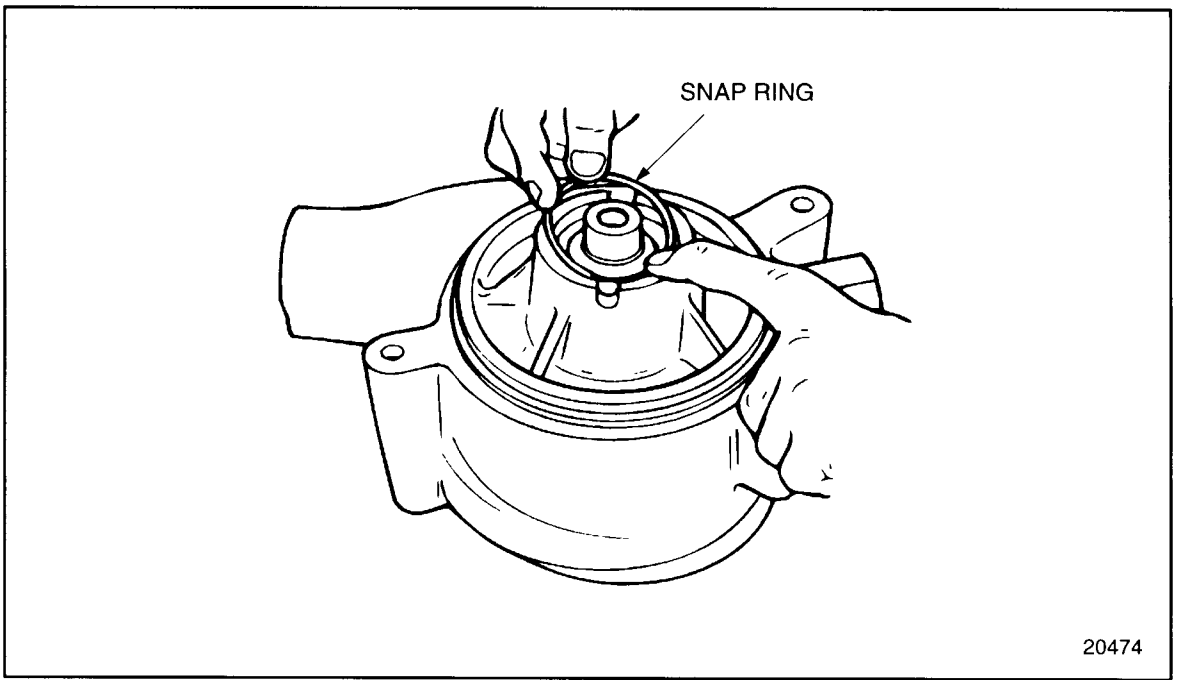

Figure 4-24 Snap Ring Installation (GCM)

 Copyright © 2004 DETROIT DIESEL CORPORATION

NOTICE:
Apply sealant sparingly. Use of excess sealant may result in seal failure due to contamination of the sealing faces, which may cause pump leakage.

11. Turn the water pump housing over and check to make sure no residual sealant remains in the water seal bore or on the seal flange contact surface. Remove any residual sealant found in these areas. Working through the rear, apply a new coating of aviation Form-A-Gasket Number 3 or equivalent to the area where the water pump seal case contacts the pump body. See Figure 4-25.

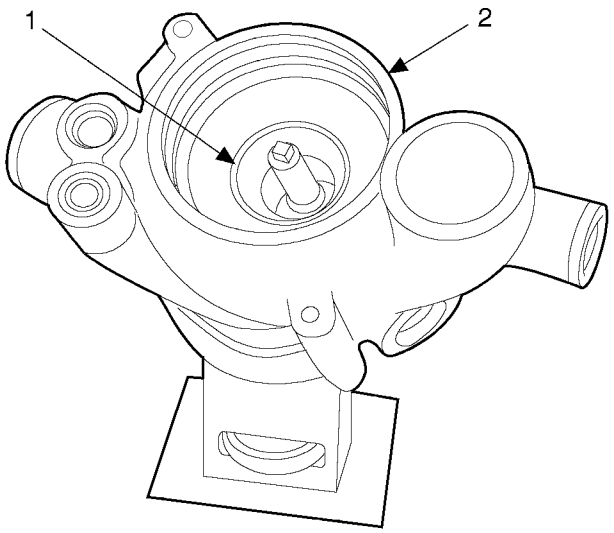

1.Seal Bore 2.Water Pump Housing

Figure 4-25 Water Pump Housing Seal Bore (GCM)

(Rev. 2004) *All information subject to change without notice.*
6SE483 0401 Copyright © 2004 DETROIT DIESEL CORPORATION

12. Install J 35988-3A, part of tool set J 35988-D, to the fixture tool. See Figure 4-26.

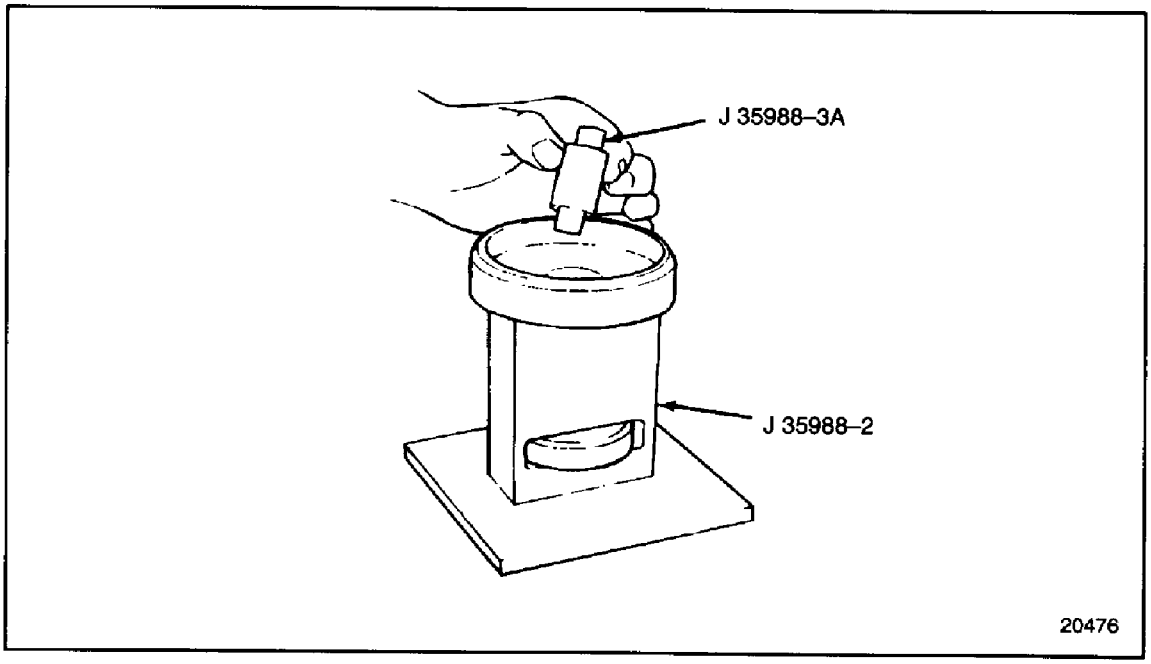

Figure 4-26 Support Installation (GCM)

NOTICE:
The extension must contact and support the shaft when installing the water seal and impeller to prevent damage to the bearings.

 Copyright © 2004 DETROIT DIESEL CORPORATION

13. Install the water pump housing assembly to the fixture. See Figure 4-27.

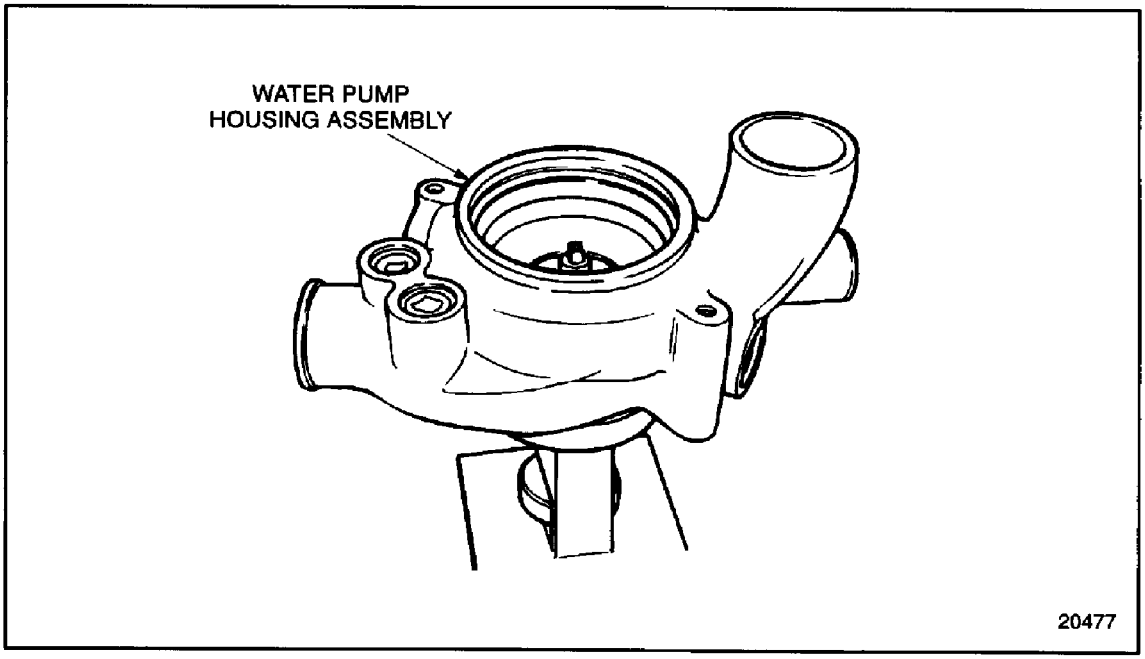

Figure 4-27 Water Pump Impeller Installation Set-up (GCM)

14. Turn the adjustor wheel to raise the extension until it contacts the drive shaft in the water pump housing.
15. Apply Loctite® primer (Locquic Primer N, Part No. 764) by swabbing onto the I.D. of the rotor of the seal.

(Rev. 2004) *All information subject to change without notice.*
6SE483 0401 Copyright © 2004 DETROIT DIESEL CORPORATION

16. Install a new water seal over the drive shaft and seat it in the water pump housing. See Figure 4-28.

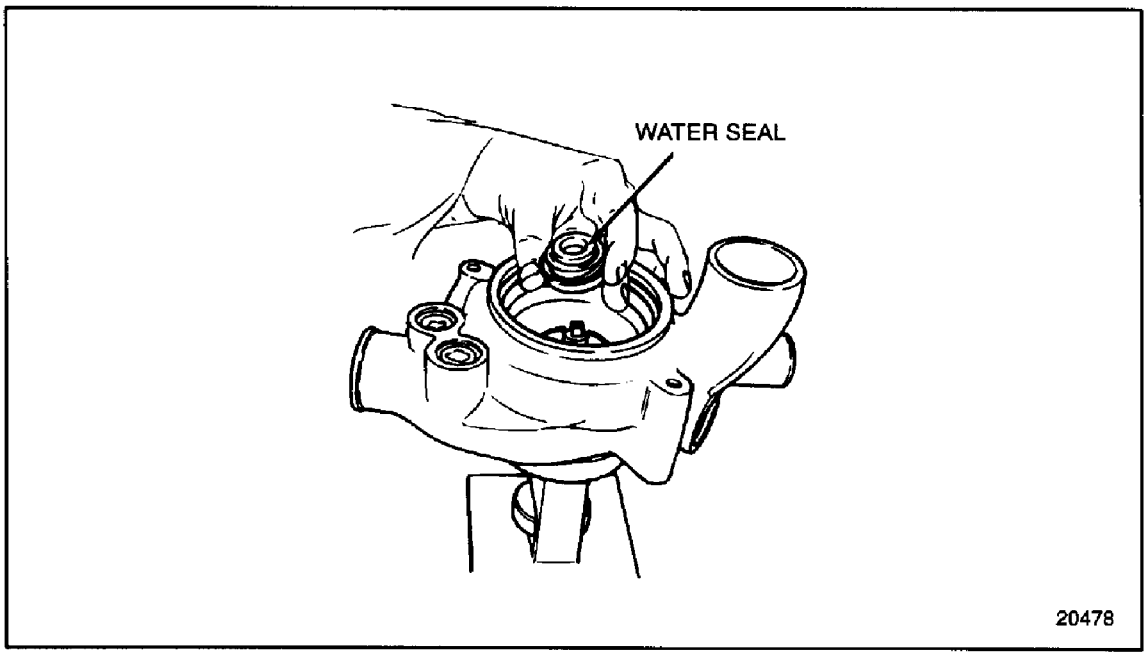

Figure 4-28 Water Seal Insertion (GCM)

Detroit Diesel previously released a water pump coolant seal which required the use of seal installer J 35517-1, part of tool set J 35988-D. This seal went into effect with engine serial number 06R671122 thru 06R698755 for Off-Highway applications and 06R670637 thru 06R698567 for On-Highway applications, and can be used with both the former style (front mounted) water pump as well as the current style (gear case mounted) water pump. The former coolant seal is no longer serviced. The new coolant seal is used after engine serial number 06R698755 Off-Highway and 06R698567 On-Highway. The new coolant seal requires the use seal installer J 35988-19, do not use seal installer J 35517-1 with the new coolant seal.

17. Position J 35988-19, part of tool set J 35988-D over the water seal. See Figure 4-29.

NOTICE:
Using old water pump seal installer J 35517-1 on the new water pump coolant seal will result in damage to water pump.

 Copyright © 2004 DETROIT DIESEL CORPORATION

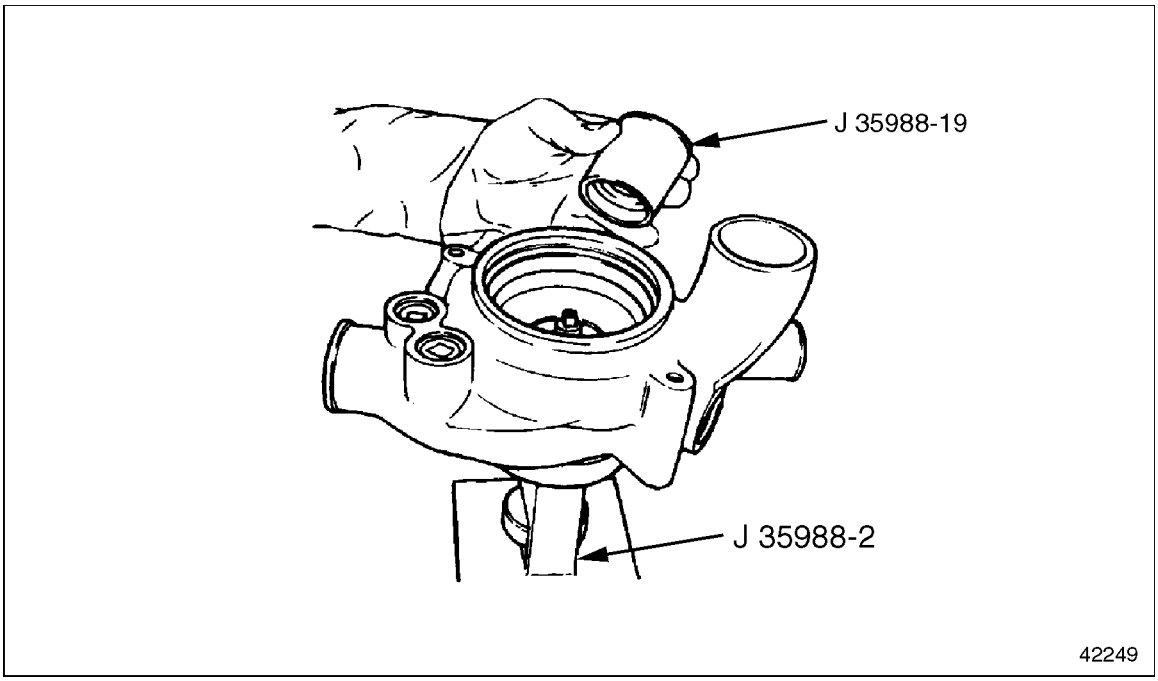

Figure 4-29 Water Seal Installation (GCM)

18. Press the water seal into the housing until the flange of the seal case contacts the water pump housing a full 360 degrees. Remove tool J 35988-19 , part of tool set J 35988-D.

(Rev. 2004) *All information subject to change without notice.*
6SE483 0401 Copyright © 2004 DETROIT DIESEL CORPORATION

19. With the water pump housing still housed in tool J 35988-2, part of tool set J 35988-D, and located on a press bed, position the impeller over the square end of the drive shaft with the vanes of the impeller facing down. See Figure 4-30.

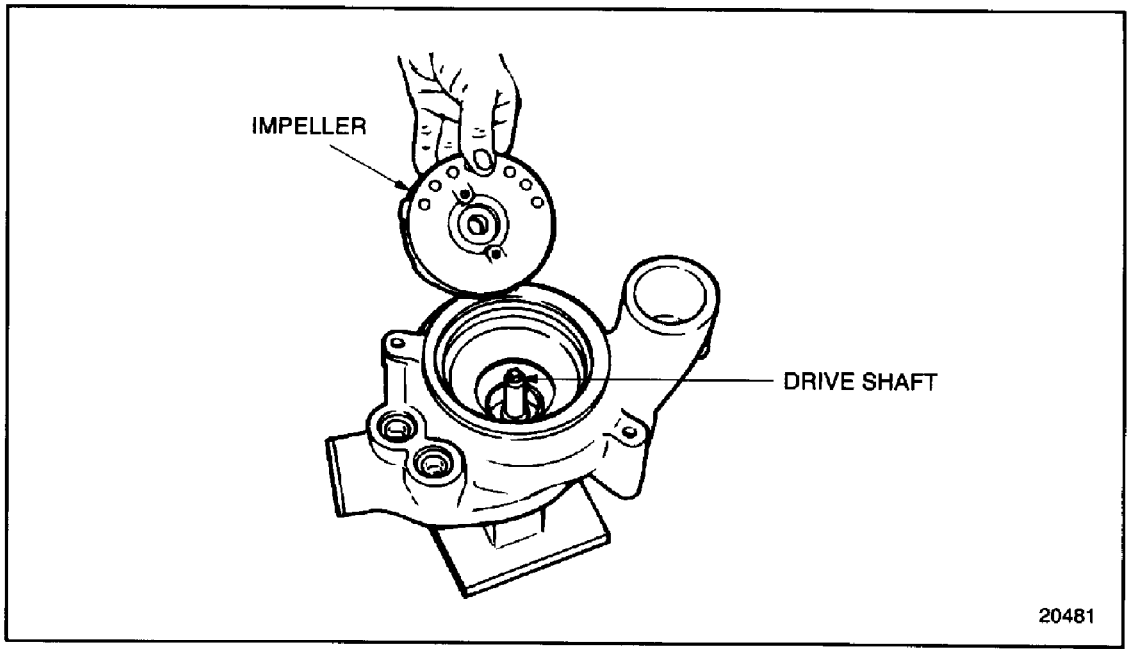

Figure 4-30 Water Pump Impeller Installation (GCM)

NOTICE:
During this procedure, the drive shaft must be supported by the extension tool J 35988-3A, part of tool set J 35988-D. Failure to support the drive shaft while installing the impeller may result in bearing damage.

 Copyright © 2004 DETROIT DIESEL CORPORATION

20. Using the impeller installation tool J 35988-14, part of tool set J 35988-D, press the impeller on until the tool is flush against the water pump body. See Figure 4-31.

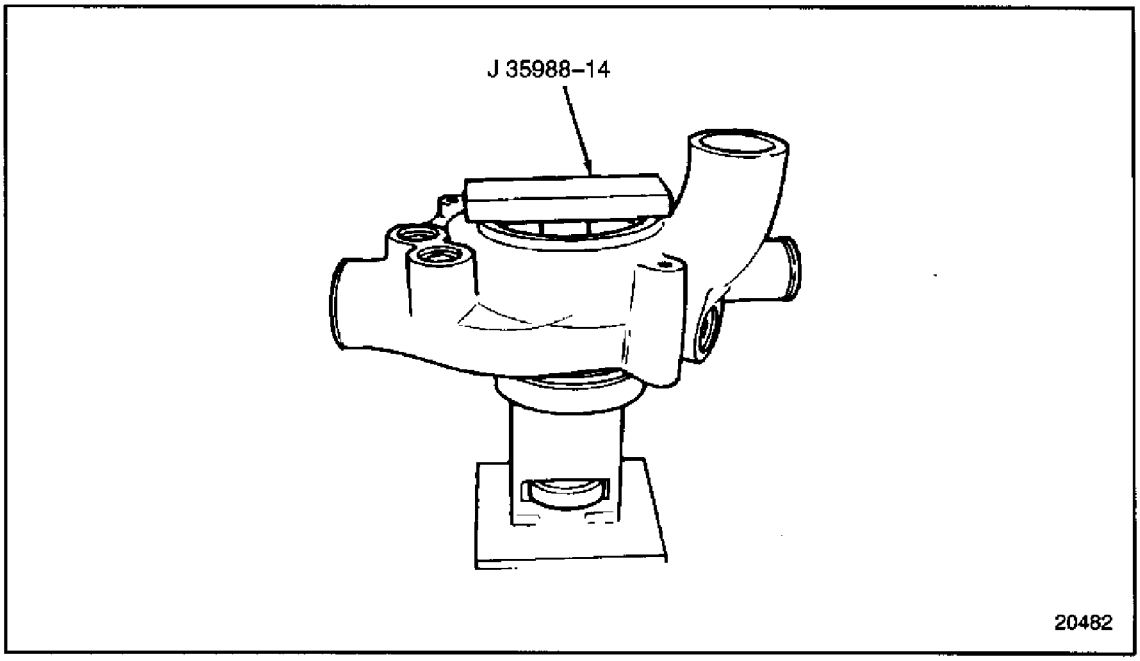

Figure 4-31 Water Pump Impeller Location (GCM)

(Rev. 2004) *All information subject to change without notice.*
6SE483 0401 Copyright © 2004 DETROIT DIESEL CORPORATION

21. Turn the housing over and place it face (impeller side) down on the fixture J 35988-2, part of tool set J 35988-D. See Figure 4-32.

NOTICE:
If the gear has a press fit, turn the adjustor wheel to raise the extension J 35988-3A, part of tool set J 35988-D, until it contacts and supports the shaft. This is necessary to prevent damage to the bearings when pressing the gear onto the shaft.

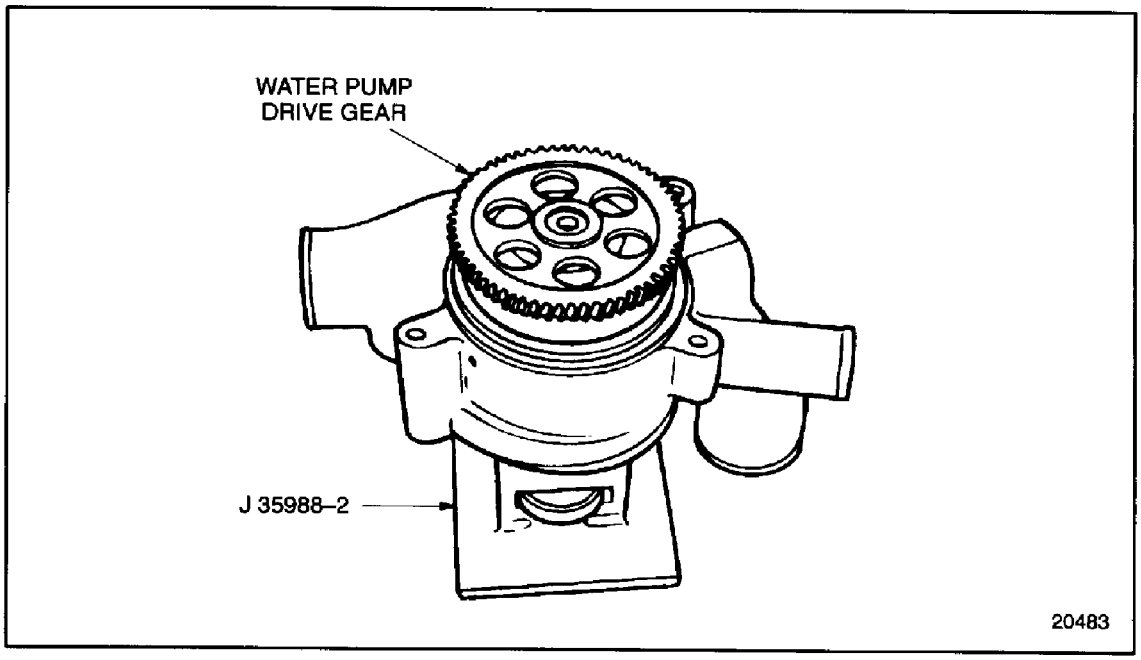

Figure 4-32 Water Pump Drive Gear Installation (GCM)

22. Install the water pump drive gear to the drive shaft.

NOTE:
The water pump drive gear may have a slip fit. This is due to manufacturing tolerances and is acceptable.

 Copyright © 2004 DETROIT DIESEL CORPORATION

23. Using the small end of tool J 35988-1, part of tool set J 35988-D, press the drive gear down onto the drive shaft until it touches the bearings. See Figure 4-33.

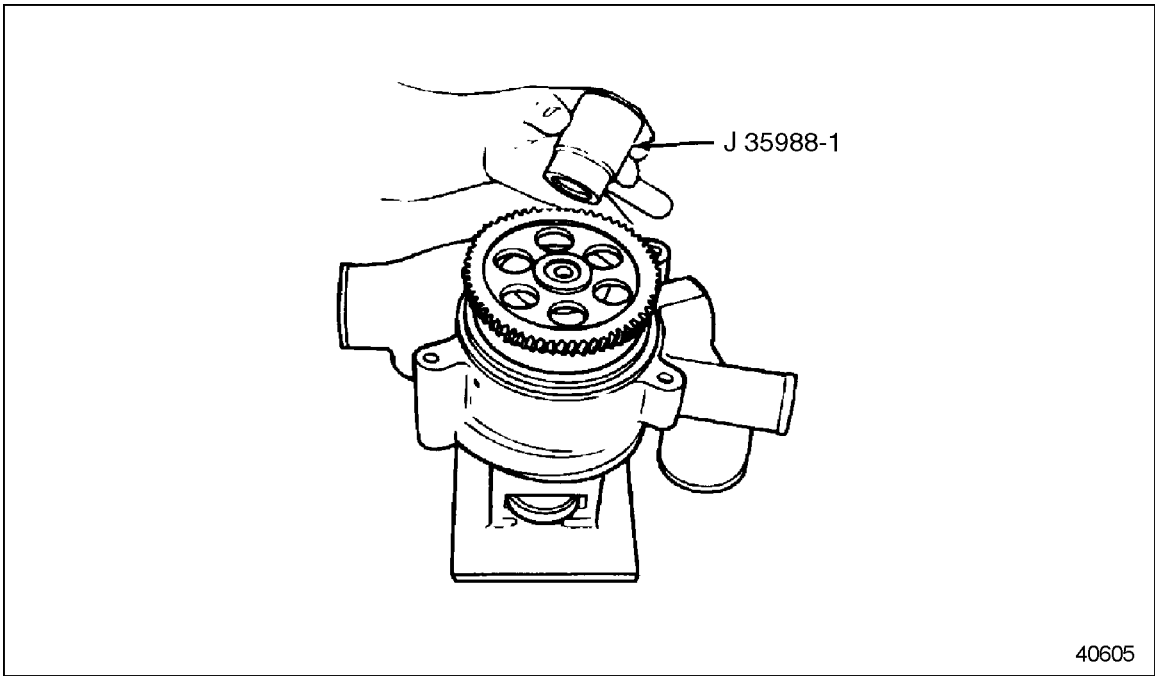

Figure 4-33 Water Pump Drive Gear Installation (GCM)

24. Install the retaining bolt and washer. Hold the square end of the drive shaft and torque the retaining bolt to 101-126 N·m (75- 93 lb·ft).

4.2.6.1 Assembly Integrity Test

Verify the assembly integrity as follows:

1. Turn the pump over and install the water pump impeller slip and lash tester, J 35687-1, into the tapped holes provided in the impeller.

NOTICE:
When clamping gears, use soft jaws on vise to prevent damage to the gear teeth.

2. Clamp the water pump drive gear in a vise, with the impeller facing up.
3. Using a 1/2 in. drive torque wrench in the hole provided in the center of the slip and lash tester J 35687-1, apply 68 N·m (50 lb·ft) torque in either direction. The impeller must withstand 68 N·m (50 lb·ft) torque without slipping.
   [a] If the torque specification is not satisfied, disassemble water pump and replace the impeller. Refer to section 4.2.3.
   [b] If the torque specification is satisfied, reuse the part.

(Rev. 2004) *All information subject to change without notice.*
6SE483 0401 Copyright © 2004 DETROIT DIESEL CORPORATION

4. Using a dial indicator with magnetic base, measure the total run-out of the water pump drive gear at four places, at 90° intervals. Maximum allowable run-out is 0.0635 mm (0.0025 in.). See Figure 4-34.

   [a] If this value is exceeded, disassemble the water pump and check for burrs or foreign particles. Refer to section 4.2.3.

   [b] If the valve is not exceeded, reuse the part.

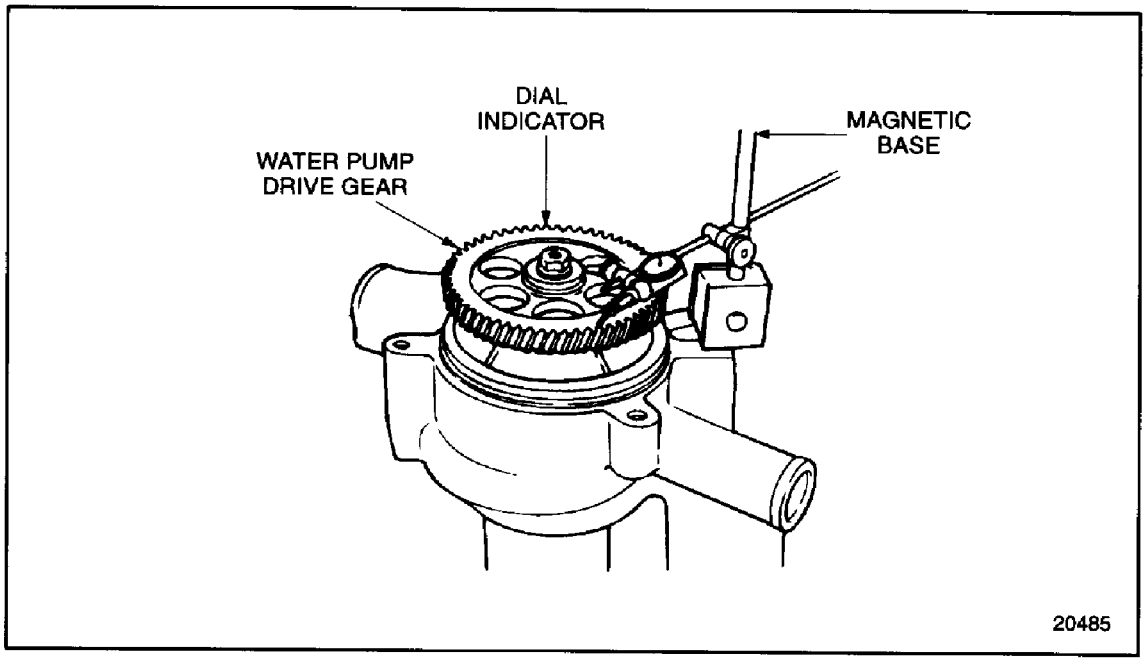

Figure 4-34 Measuring Water Pump Drive Gear Runout (GCM)

5. Remove dial indicator and magnetic base.

 Copyright © 2004 DETROIT DIESEL CORPORATION

4.2.7 Assembly of Water Pump (GCM) - cont'd

Continue assembly of the water pump as follows:

CAUTION:

To avoid injury from flying parts when working with components under spring tension, wear adequate eye protection (face shield or safety goggles).

1. Install seal ring, water pump cover, and snap ring with the beveled side of snap ring facing out. Tap around the inside rim of the snap ring with a brass drift and hammer to seat snap ring in groove fully.

4.2.8 Installation of Water Pump (GCM)

Install the water pump as follows:

1. Coat the water pump seal ring with clean engine oil.
2. Install the seal ring to the groove in the water pump housing.
3. Coat the water pump drive gear with clean engine oil.
4. Install the water pump to the engine, meshing the water pump drive gear with the bull gear.
5. Install the three water pump housing-to-gear case bolts. Tighten the bolts alternately and evenly to draw the water pump straight into the engine. Torque the bolts to 58-73 N·m (43-54 lb·ft).
6. Measure the gear backlash. Refer to section 1.22.2.1.
7. Install water bypass tube. If using a spring type hose clamps, refer to step 8. If using worm screw drive, liner type hose clamps, refer to step 9.

(Rev. 2004) *All information subject to change without notice.*
6SE483 0401 Copyright © 2004 DETROIT DIESEL CORPORATION

CAUTION:

To avoid injury from flying parts when working with components under spring tension, wear adequate eye protection (face shield or safety goggles).

8. If spring type hose clamps are used, fasten the bypass tube to the water pump bypass outlet and thermostat housing water inlet as follows:

   [a] Using hose clamp installer tool J 41454, install two hose clamps onto the water bypass tube; then push a connecting hose onto each end of the bypass tube. See Figure 4-35. Using hose clamp installer tool J 41454, open the clamps and slide them over the hoses to secure them in place on the tube.

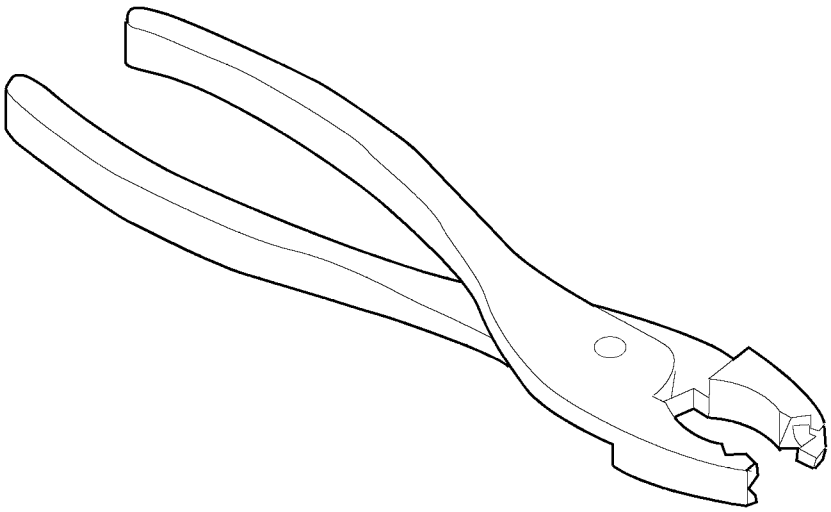

Figure 4-35 Clamp Installer Tool

NOTE:
Ensure the clamps are seated against the beads on the bypass tube neck and are at least one-half inch from the hose ends.

   [b] Using tool J 41454(if required), install one clamp over the water bypass outlet on the water pump and one clamp over the thermostat housing water inlet.

 Copyright © 2004 DETROIT DIESEL CORPORATION

[c] Push one end of the bypass tube and hose assembly onto the water pump bypass outlet and the other end onto the thermostat housing water inlet, ensuring the tube is properly oriented to avoid interference.

[d] Using installer tool J 41454, open the clamps and slide them over the hoses to secure them in place on the water pump bypass outlet and the thermostat housing inlet.

NOTE:
Ensure the clamps are seated against the beads on the water pump bypass outlet and the thermostat housing water inlet and are at least one-half inch from the hose ends.

[e] Proceed to step 10

9. If worm screw drive, liner type clamps are used, fasten the bypass tube to the water pump bypass outlet and the thermostat housing water inlet as follows:

[a] Install two hose clamps onto the water bypass tube and push connecting hoses onto the ends of the tube.

[b] Push the hoses on the ends of the bypass tube onto the thermostat housing water inlet and the water pump bypass outlet, ensuring the tube is properly oriented to avoid interference.

[c] Secure the clamps onto the hoses and secure the hoses to the bypass tube, thermostat housing water inlet, and water pump bypass outlet by tightening the clamp screws.

NOTE:
Ensure the clamps are seated against the beads on the bypass tube neck; the thermostat housing water inlet, and the water pump bypass outlet, are at least one-half inch from the hose ends.

10. Fasten the water transfer tube to the water pump and oil cooler housing as follows:

[a] Install four worm screw drive hose clamps onto the water transfer tube and push connecting hoses onto the ends of the tube.

[b] Push the hoses on the ends of the transfer tube onto the oil cooler water inlet and the water pump outlet, ensuring the tube is properly oriented to avoid interference.

[c] Secure the ends of the hoses to the transfer tube, oil cooler inlet, and water pump outlet by tightening the clamp screws.

11. Refer to section 11.3.5 for verification of proper water pump installation.

(Rev. 2004) *All information subject to change without notice.*
6SE483 0401 Copyright © 2004 DETROIT DIESEL CORPORATION

4.3 WATER PUMP (FRONT MOUNTED) (FM)

The centrifugal-type water pump circulates the engine coolant through the cylinder block, cylinder head, radiator and the oil cooler. See Figure 4-36.

The pump is mounted on the front of the engine gear case cover on units built prior to 6R037024 and is driven by the water pump drive gear. The water pump drive gear meshes with the bull gear.

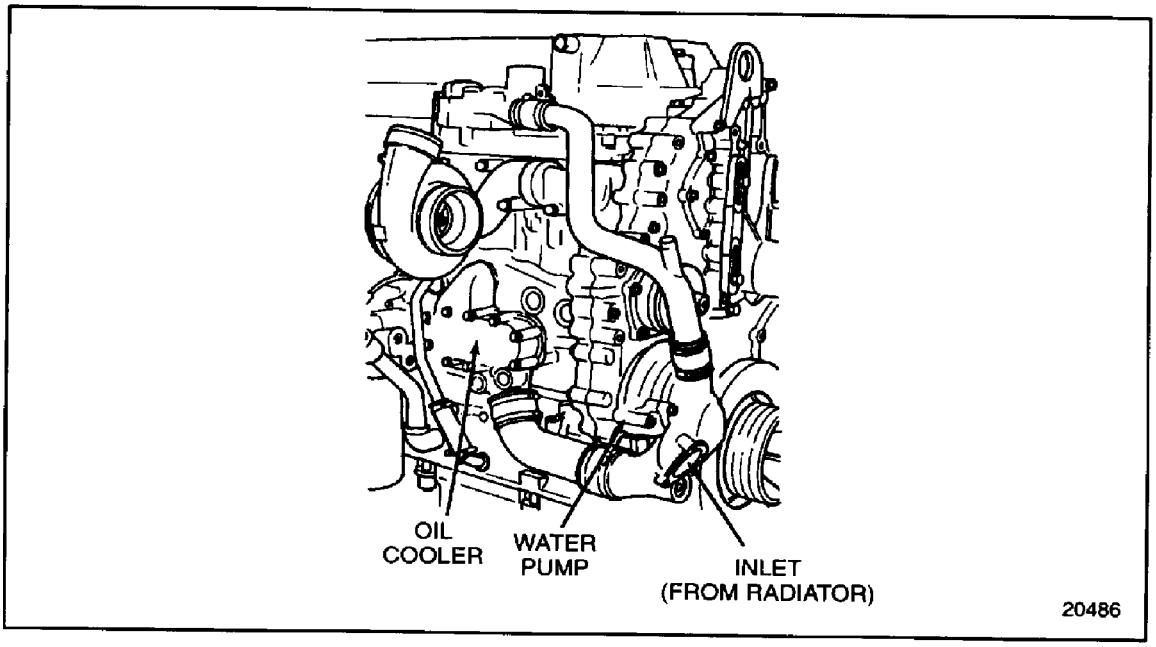

Figure 4-36 Front Mounted Water Pump

An impeller is pressed on one end of the stainless steel drive shaft. The other end of this shaft has internal threads, and a retaining bolt secures the water pump drive gear to the shaft. Two identical roller bearing assemblies are used to carry the shaft See Figure 4-37.

 Copyright © 2004 DETROIT DIESEL CORPORATION

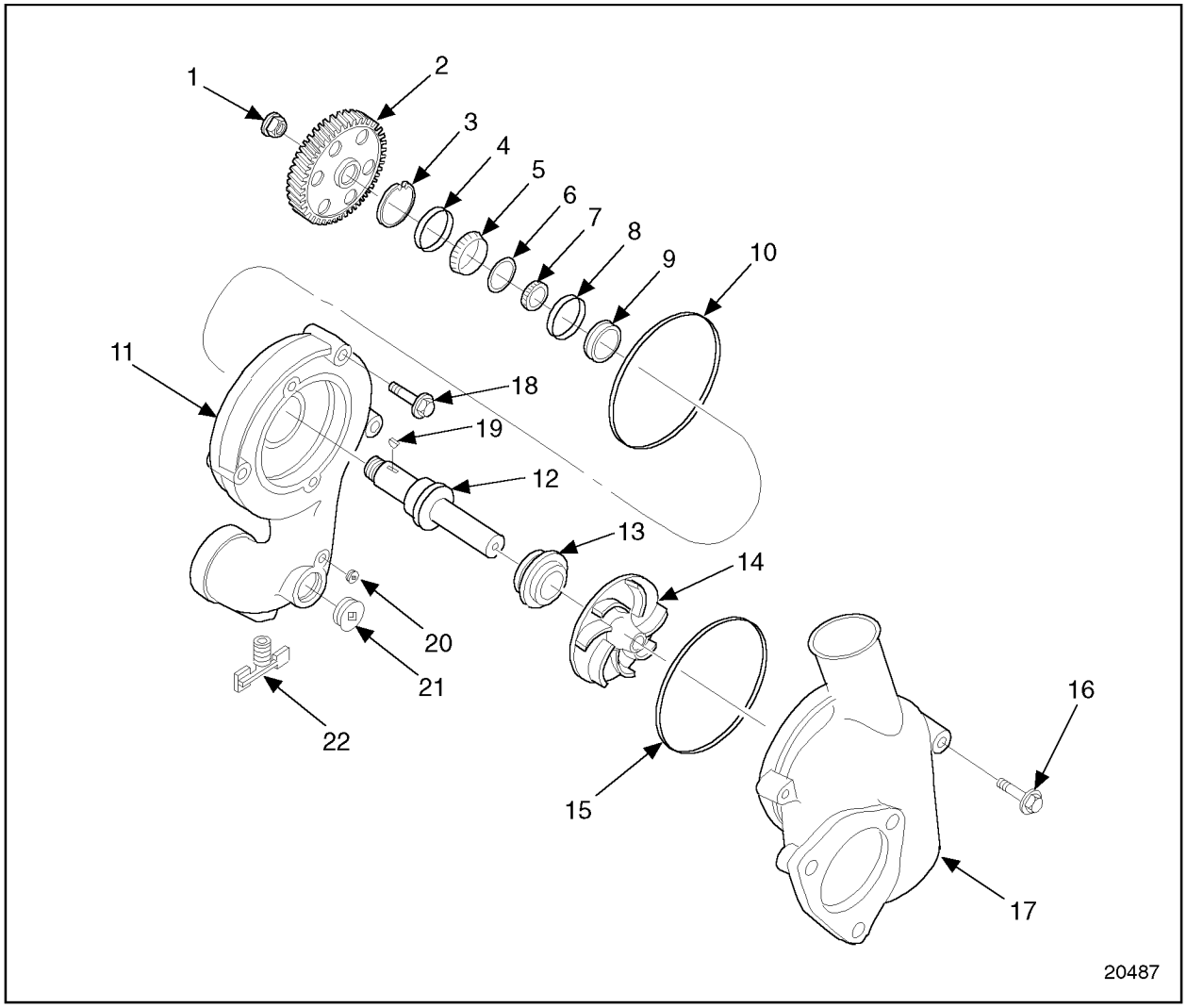

1. Locknut
2. Gear, Water Pump Drive
3. Snap Ring
4. Bearing Race
5. Roller Bearing, Larger
6. Spacer Rings (2)
7. Roller Bearing, Small
8. Bearing Race
9. Oil Seal
10. Seal Ring, Water Pump Housing
11. Housing, Water Pump
12. Drive Shaft
13. Water Seal
14. Impeller
15. Seal Ring, Water Pump Cover
16. Bolt, Cover-to-housing
17. Water Pump Cover
18. Bolt, Pump Housing to Gear Case Cover
19. Woodruff Key
20. Small Pipe Plug, Water Pump Housing
21. Large Pipe Plug, Water Pump Housing
22. Drain Cock

Figure 4-37 Front Mounted Water Pump Details and Relative Location of Parts

(Rev. 2004) *All information subject to change without notice.*
6SE483 0401 Copyright © 2004 DETROIT DIESEL CORPORATION

A rectangular rubber ring, located in a groove in the water pump housing, seals the water pump to the gear case cover. A smaller rectangular rubber ring, located in a groove in the water pump cover, seals the cover to the water pump housing. Engines built before October, 1989, are equipped with rubber O-ring seals on the water pump housing and cover. See Figure 4-37.

An oil seal is located behind the bearing assemblies, and a unitized, spring-loaded, face-type water seal is used behind the impeller. This seal prevents water from leaking down the shaft and into the gear case. It also prevents lubricating oil from entering the cooling system. The water and oil seals cannot be replaced without removing the water pump from the engine.

The pump bearings are lubricated by splash oil through a passage from the front of the pump housing.

 Copyright © 2004 DETROIT DIESEL CORPORATION

4.3.1 Repair or Replacement of Water Pump (FM)

To determine if repair or replacement of the water pump is necessary, perform the following procedure. See Figure 4-38.

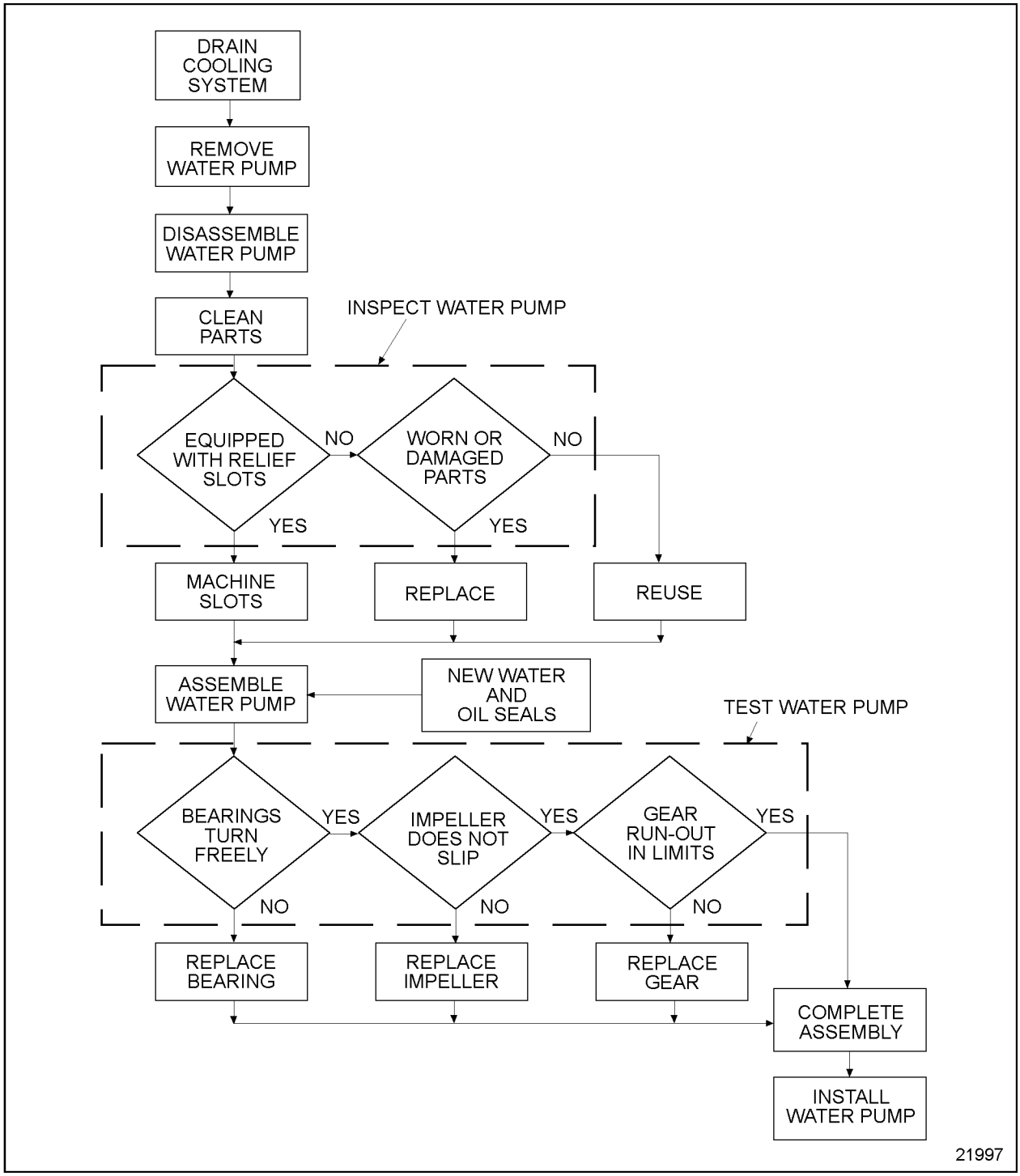

Figure 4-38 Flowchart for Repair or Replacement of Water Pump (FM)

(Rev. 2004) *All information subject to change without notice.*
6SE483 0401 Copyright © 2004 DETROIT DIESEL CORPORATION

4.3.2 Draining and Removal of Front Mounted Water Pump

Drain the cooling system as follows:

Open the drain cocks located at the right rear corner of the engine, at the bottom of the water pump and in the bottom of the thermostat housing.

Remove the water pump as follows:

1. Loosen the hose clamps and remove the coolant hoses from the water pump housing.
2. Loosen and remove the three water pump housing-to-gear case bolts. Remove the water pump from the engine by pulling it straight out of the gear case.

4.3.3 Disassembly of Front Mounted Water Pump

Disassemble the water pump as follows:

1. Loosen and remove the two water pump cover-to-pump housing bolts. Remove the water pump cover by pulling it straight out of the water pump housing, to prevent possible damage to the seal ring.

NOTICE:
If a vise is used to secure the water pump drive gear for locknut or impeller removal, use soft jaws on the vise and exercise extreme caution to prevent damage to the water pump drive gear teeth.

2. Clamp the water pump drive gear in a vise, with the impeller facing up. Use a two-screw puller and remove the water pump impeller from the shaft, using the two threaded holes in the face of the impeller.

 Copyright © 2004 DETROIT DIESEL CORPORATION

3. Place the water pump face down on a press bed. Using J 35988-5, part of tool set J 35988-D, and two breaker bars, loosen the locknut that secures the water pump drive gear to the shaft. Remove the locknut. See Figure 4-39.

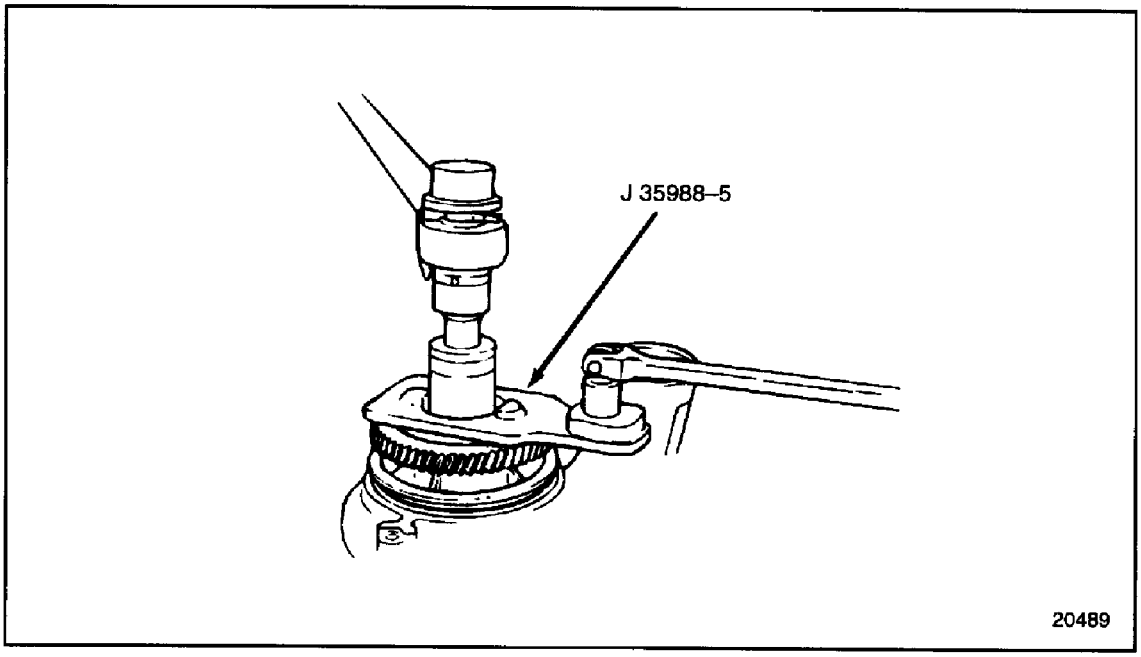

Figure 4-39 Water Pump Drive Gear Locknut Removal (FM)

4. Use a two-jaw puller to remove the water pump drive gear from the drive shaft.

NOTE:
Use care not to lose the Woodruff key.

(Rev. 2004) *All information subject to change without notice.*
6SE483 0401 Copyright © 2004 DETROIT DIESEL CORPORATION

⚠ CAUTION:

To avoid injury from flying parts when working with components under spring tension, wear adequate eye protection (face shield or safety goggles).

5. Remove the snap ring from the water pump housing. See Figure 4-40.

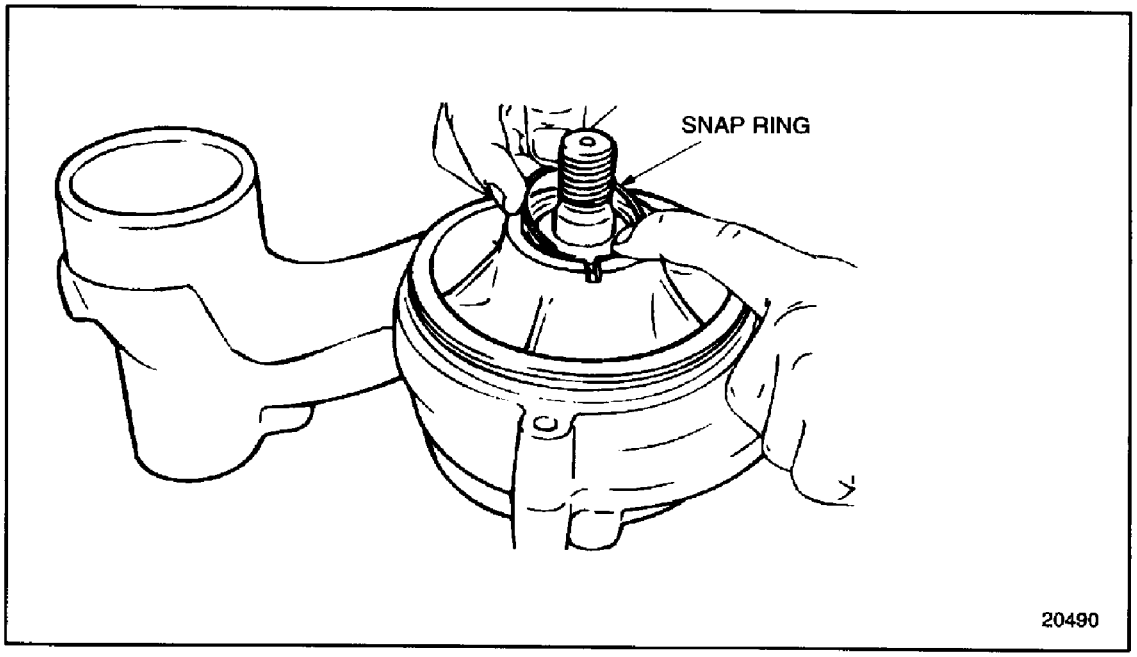

Figure 4-40 Snap Ring Removal (FM)

6. Support the water pump housing, engine side down, using steel blocks or plates, to allow at least 76 mm (3 in.) of clearance between the pump housing and the press bed.
7. Press the drive shaft and bearings assembly out through the back (engine side) of the water pump housing, until both bearing races are clear of the housing.

NOTICE:

Use care not to damage the housing. Damaged housing bore will cause coolant leaks and damage to the engine.

8. Remove both the water and oil seals from the housing using a brass drift and hammer.

 Copyright © 2004 DETROIT DIESEL CORPORATION

9. Support the drive shaft assembly on two steel blocks, at the bearing inner race. See Figure 4-41.

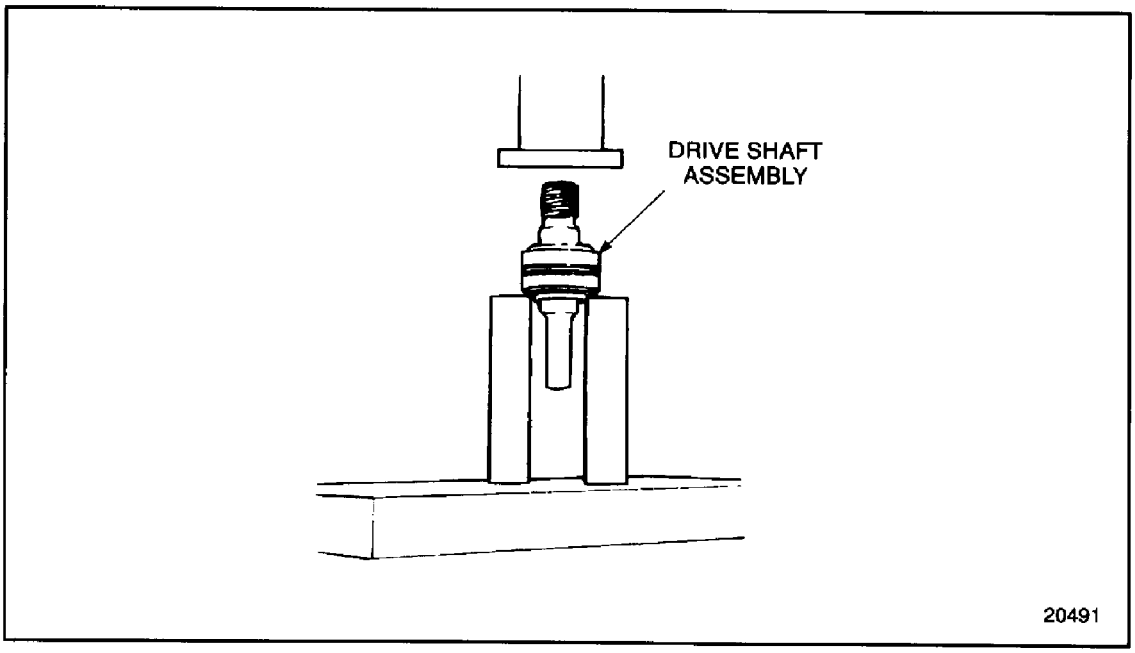

Figure 4-41 Removing Bearing Assemblies (FM)

10. Press the drive shaft out until it is clear of both bearing and race assemblies. Discard the used bearings, races and the two spacer rings located between the bearing packs.

(Rev. 2004) *All information subject to change without notice.*
6SE483 0401 Copyright © 2004 DETROIT DIESEL CORPORATION

4.3.3.1 Inspection of Front Mounted Water Pump

Inspect the water pump parts as follows:

1. Visually inspect the parts for cracks, wear or other damage.
   [a] If parts are cracked, worn or have other damage, replace damaged or worn parts. Refer to section 4.3.5.
   [b] If parts are not cracked, worn or damaged, reuse remaining components.
2. Inspect the water pump housing for relief slots in the water seal cavity. If pump is without the relief slots, modify the area in which the impeller rides to add the slots. See Figure 4-42.

NOTE:
The gear case cover mount water pumps have two cast slots in the water seal cavity. Effective with Engine Serial Number 6R2807 machined relief slots were added to the pump. The relief slots ensure coolant flow to the seal faces.

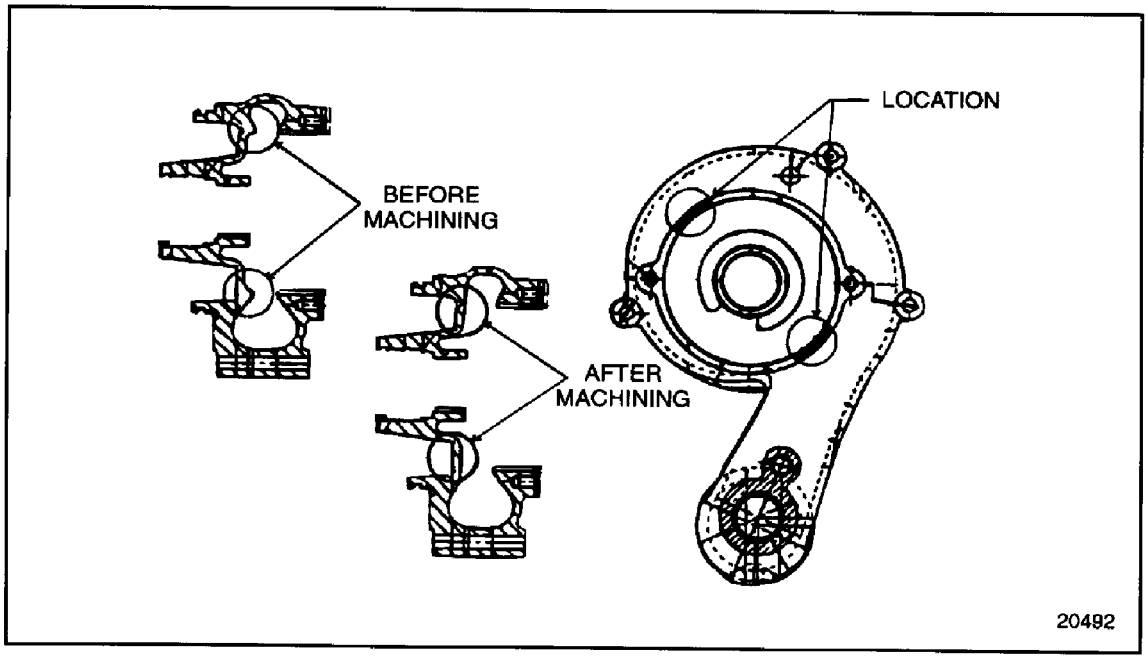

Figure 4-42 Water Pump Body Modification (FM)

 Copyright © 2004 DETROIT DIESEL CORPORATION

NOTICE:

If a vise is used to secure the water pump drive gear for locknut or impeller removal, use soft jaws on the vise and exercise extreme caution to prevent damage to the water pump drive gear teeth.

[a] Lock the water pump body securely in the soft jaws of a bench vise.

[b] Using a die grinder (if possible, have professionally machined), remove 38.1 mm (1.5 in.) of material in the 10 o'clock and 4 o'clock positions of the raised belt that surrounds the water pump impeller. See Figure 4-42. Enough material should be removed so that, when machined, the slot is flush with the rest of the casting.

[c] After machining, wash the pump housing and all other pump parts in clean fuel oil.

CAUTION:

To avoid injury from flying debris when using compressed air, wear adequate eye protection (face shield or safety goggles) and do not exceed 40 psi (276 kPa) air pressure.

[d] Dry with compressed air.

4.3.4 Cleaning of Front Mounted Water Pump

Clean the water pump parts as follows:

1. Wash all of the pump parts in clean fuel oil.

CAUTION:

To avoid injury from flying debris when using compressed air, wear adequate eye protection (face shield or safety goggles) and do not exceed 40 psi (276 kPa) air pressure.

2. Dry the parts with compressed air.

(Rev. 2004) *All information subject to change without notice.*
6SE483 0401 Copyright © 2004 DETROIT DIESEL CORPORATION

4.3.5 Assembly of Front Mounted Water Pump

Assemble the water pump as follows:

1. Coat the bearing bores of the water pump housing and the drive shaft bearing surfaces with clean engine oil.

NOTICE:
Although the bearings are identical, the bearings and races are matched parts, and should be installed as they are removed from the box. Parts that are not matched will cause damage to the water pump.

2. Assemble new bearing packs. See Figure 4-43.

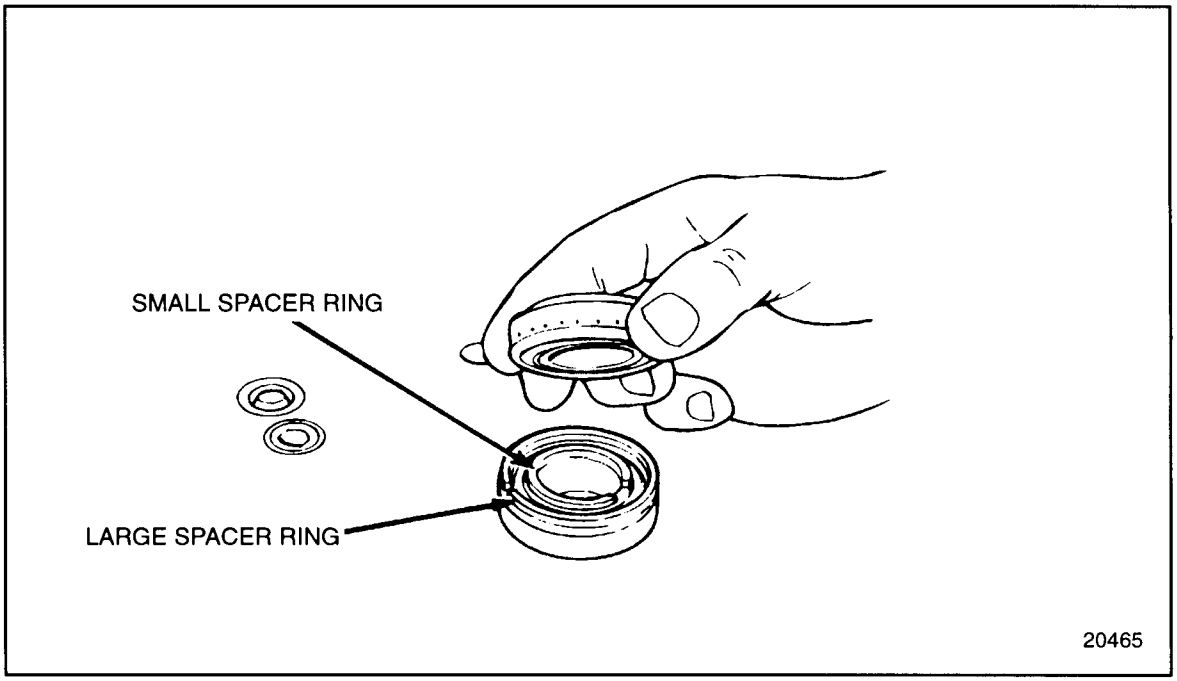

Figure 4-43 Bearing Pack Assembly (FM)

 Copyright © 2004 DETROIT DIESEL CORPORATION

3. Install the drive shaft into the center of the fixture usingJ 35988-18 andJ 35988-2, parts of tool set J 35988-D. See Figure 4-44.

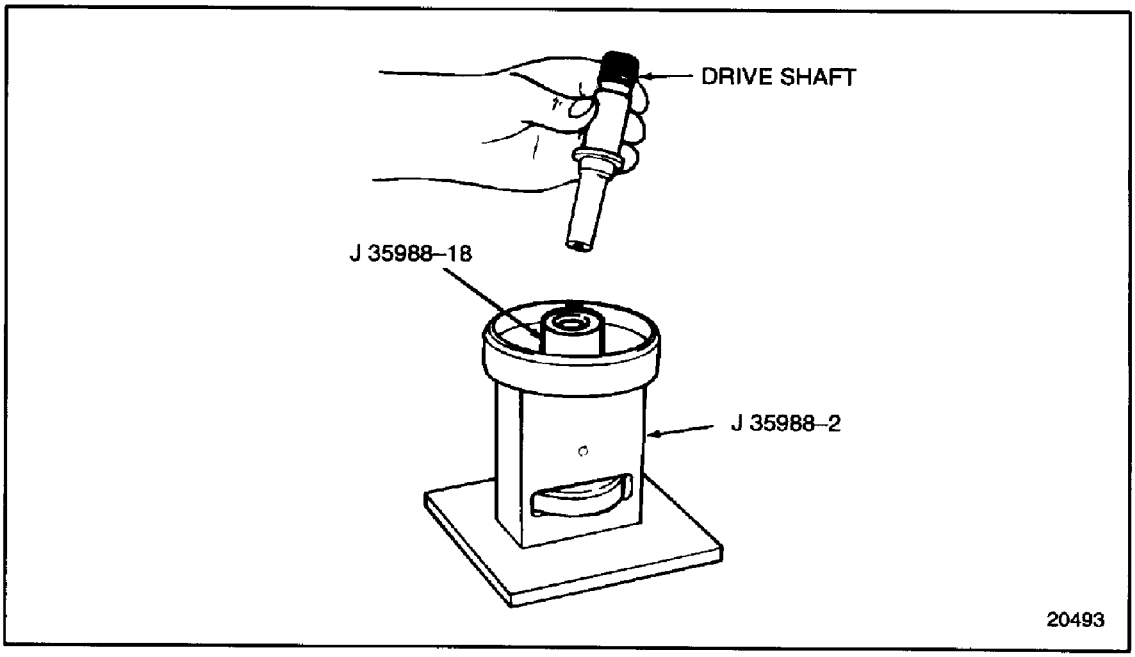

Figure 4-44 Bearing Installation Set-Up (FM)

4. Install the assembled bearing packs to the drive shaft. See Figure 4-45.

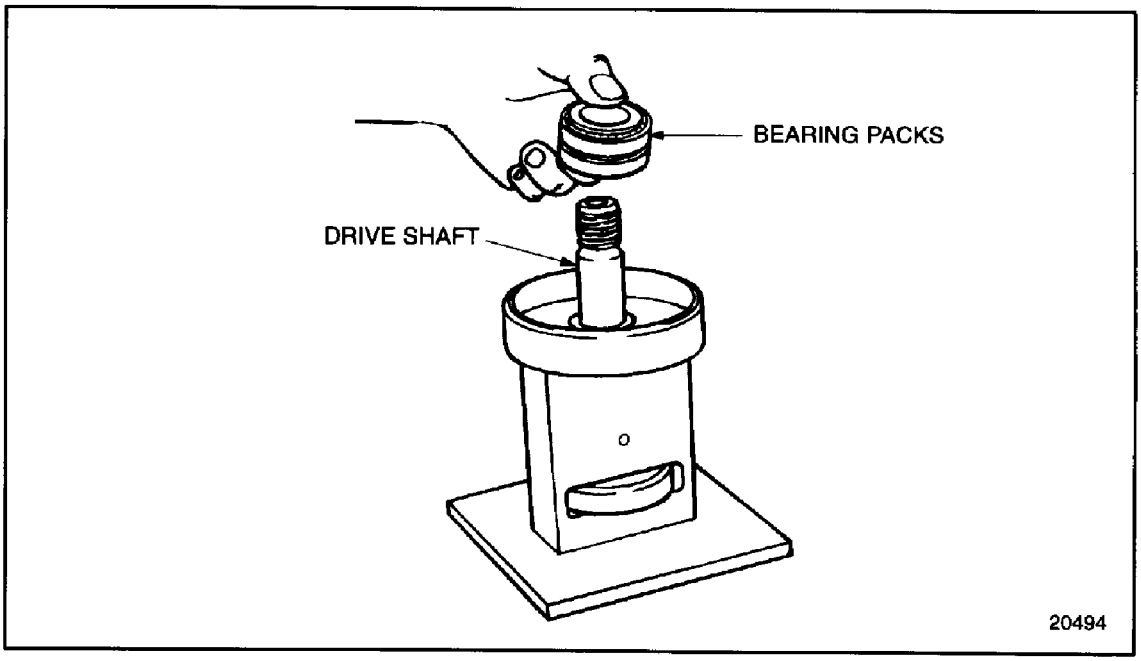

Figure 4-45 Bearing Placement (FM)

(Rev. 2004) *All information subject to change without notice.*
6SE483 0401 Copyright © 2004 DETROIT DIESEL CORPORATION

5. Press the bearing pack onto the shaft until it contacts the shoulder of the shaft using J 35988-1, part of tool set J 35988-D. See Figure 4-46.

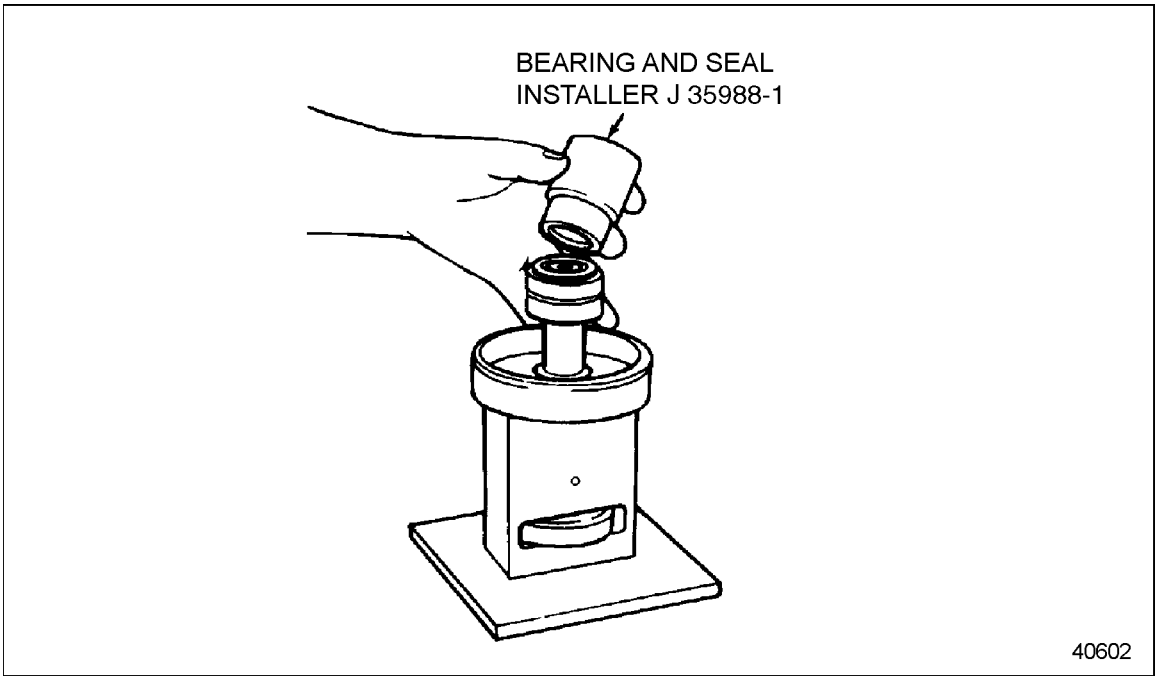

Figure 4-46 Bearing Installation (FM)

6. Remove the shaft and bearing assembly from the press.

4.3.5.1 Test Bearing Assembly (FM)

Check bearing assembly as follows:

1. Turn bearings to ensure they turn freely.
   [a] If bearings bind, disassemble water pump and replace bearing assembly. Refer to section 4.3.3.
   [b] If bearings do not bind, reuse the part.

 Copyright © 2004 DETROIT DIESEL CORPORATION

4.3.6 Assembly of Water Pump (FM) - cont'd

Continue assembling the water pump, as follows:

1. Coat the new oil seal contact area of the water pump housing with a thin film of clean engine oil. See Figure 4-47.

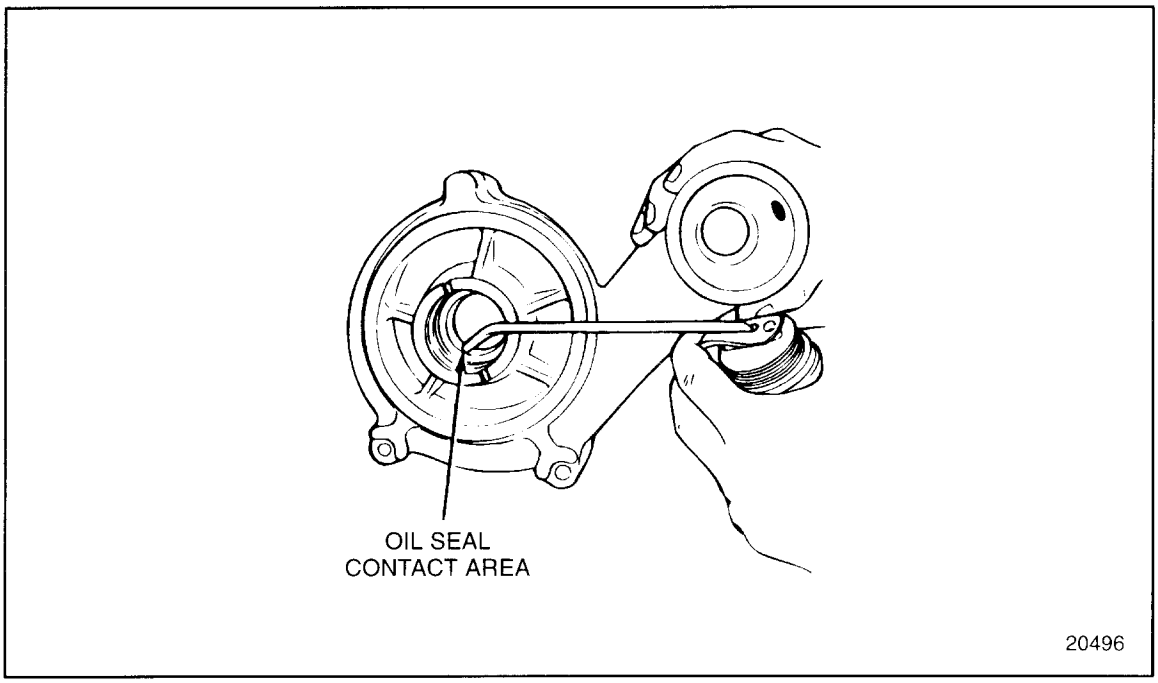

Figure 4-47 Oil Seal Contact Area Lubrication (FM)

(Rev. 2004) *All information subject to change without notice.*
6SE483 0401 Copyright © 2004 DETROIT DIESEL CORPORATION

2. Install the oil seal to the water pump housing from the rear (gear side). See Figure 4-48.

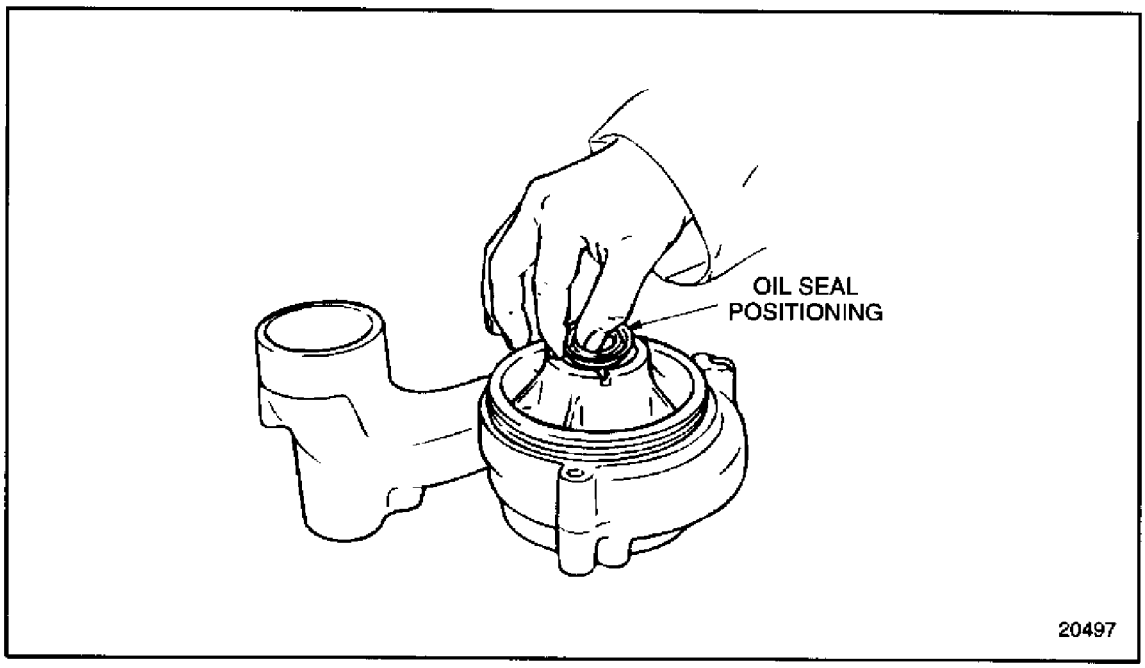

Figure 4-48 Oil Seal Positioning (FM)

 Copyright © 2004 DETROIT DIESEL CORPORATION

3. Place the small end of tool J 35988-1, part of tool set J 35988-D, into the water pump housing until it contacts the oil seal. See Figure 4-49.

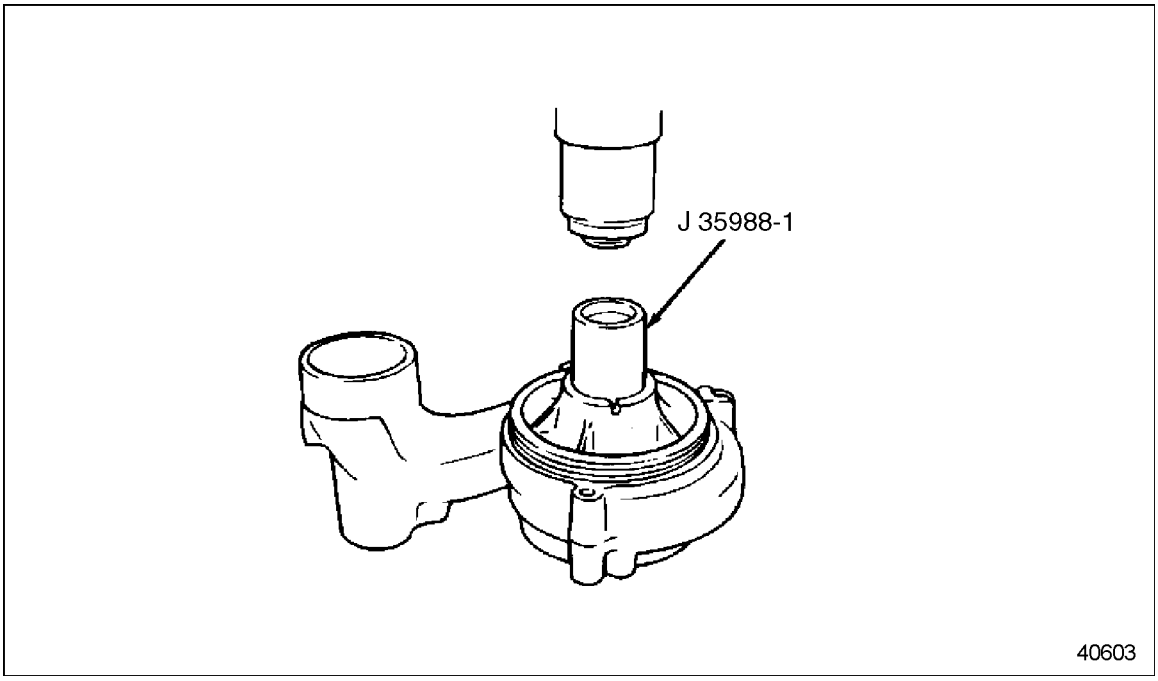

Figure 4-49 Oil Seal Installation (FM)

NOTICE:
The contact surface of the oil seal is coated with a special sealant. Do NOT remove this sealant before installing the oil seal. If sealant is removed, leakage can occur.

4. Press the oil seal into the housing until the seal lip is bottomed in the pump housing. Remove the tool J 35988-1, part of tool set J 35988-D.
5. Coat the bearings with clean engine oil.
6. Place the water pump housing, face down (gear side up), on a press bed.

(Rev. 2004) *All information subject to change without notice.*
6SE483 0401 Copyright © 2004 DETROIT DIESEL CORPORATION

7. Install the drive shaft, with bearings installed, to the rear of the water pump housing. See Figure 4-50.

NOTE:
During the bearing installation, the water pump housing must be parallel to the press bed or table surface.

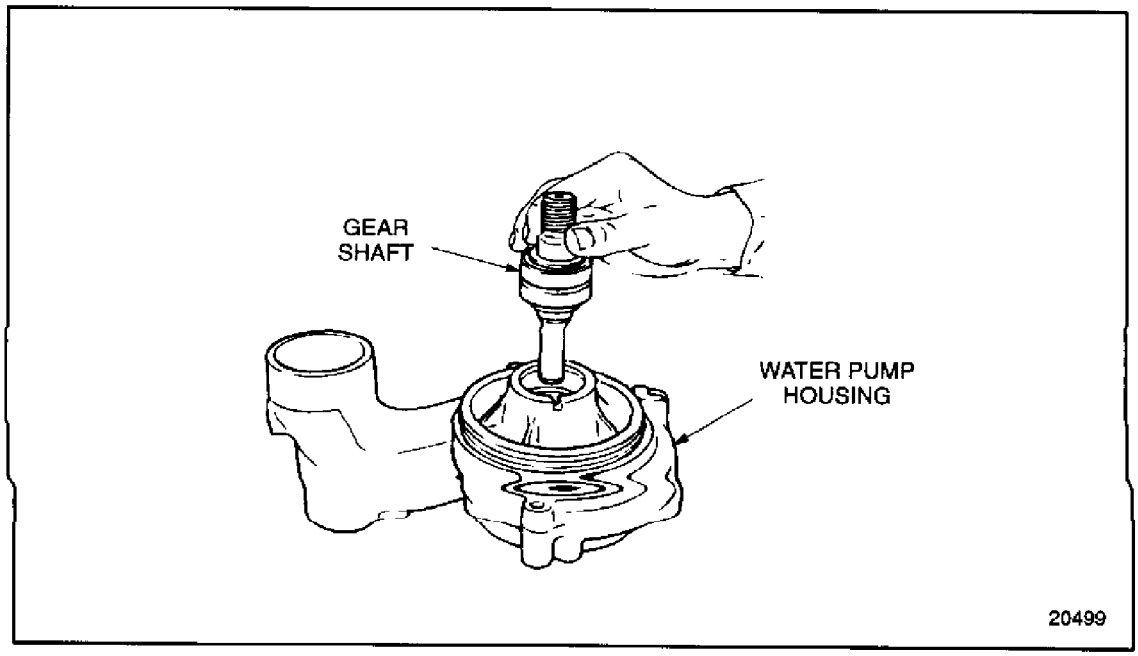

Figure 4-50 Drive Shaft Insertion (FM)

 Copyright © 2004 DETROIT DIESEL CORPORATION

8. Place the large end of tool J 35988-1, part of tool set J 35988-D, over the drive shaft so that the lip of the tool rests squarely on the outer bearing race. See Figure 4-51.

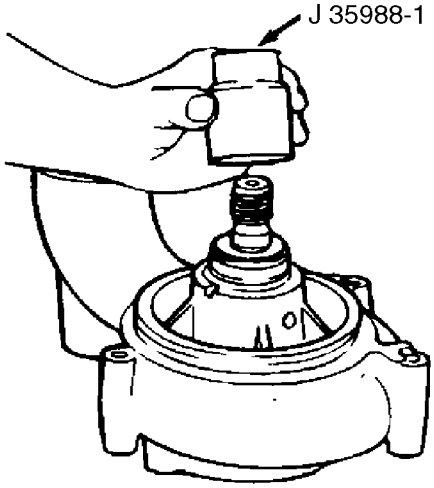

Figure 4-51 Drive Shaft Installation (FM)

NOTICE:
The drive shaft must be installed pressing on the outer bearing race only. Any other attempt at installation may damage the bearings.

9. Press the drive shaft and bearing assembly into the water pump housing, using the tool J 35988-1, part of tool set J 35988-D, until it is seated firmly against the shoulder in the housing.

(Rev. 2004) *All information subject to change without notice.*
6SE483 0401 Copyright © 2004 DETROIT DIESEL CORPORATION

10. Install the snap ring to the water pump housing. See Figure 4-52.

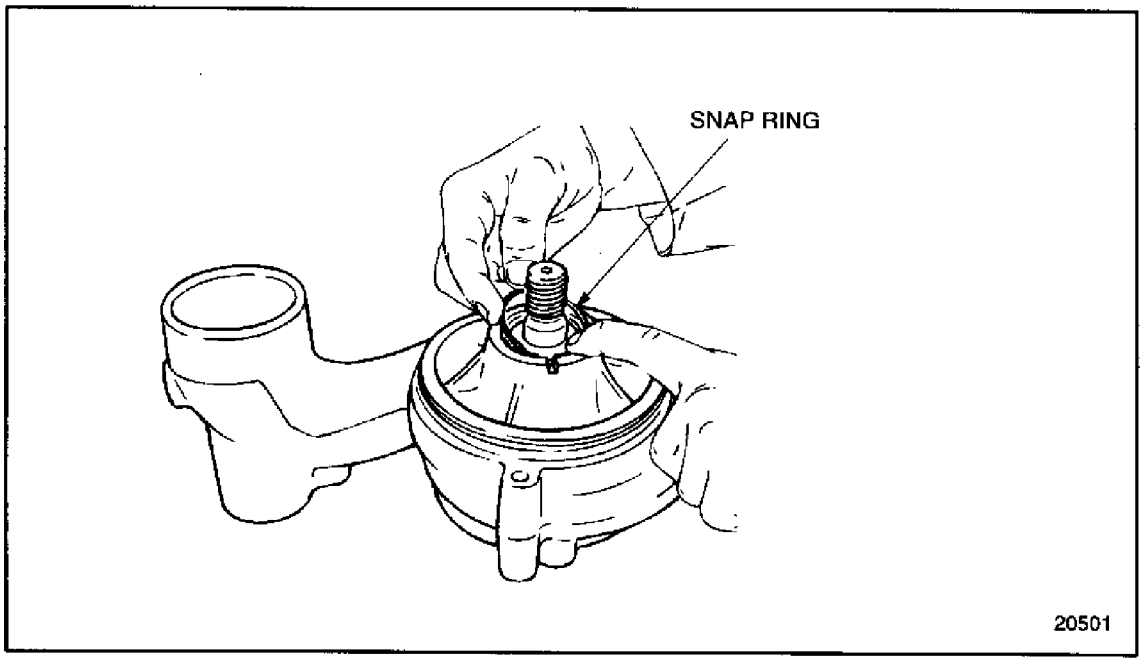

Figure 4-52 Snap Ring Installation (FM)

 Copyright © 2004 DETROIT DIESEL CORPORATION

NOTICE:
Form-a-Gasket Sealer must be used sparingly, and kept from the shaft and bearing surfaces. Excessive amounts of Form-a-Gasket Sealer could cause plugging of radiator or cooler core.

11. Turn the water pump housing over. Working through the front, apply a coating of Aviation Form-a-Gasket, Form-a-Gasket No. 3 or equivalent to the area where the water pump seal case contacts the pump body. See Figure 4-53.

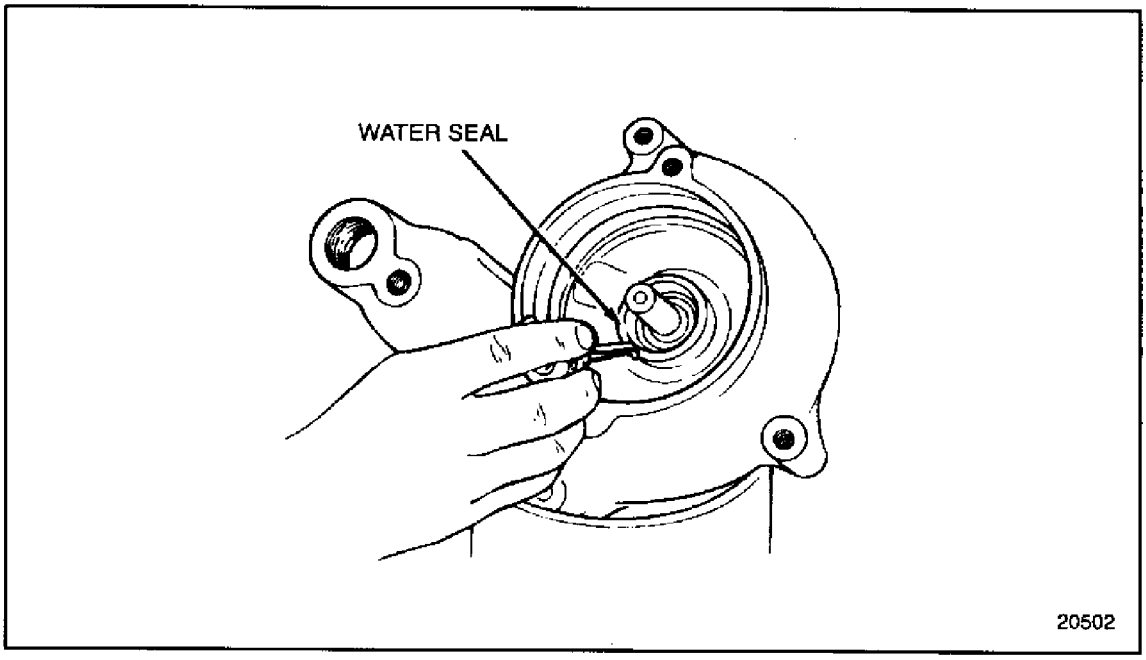

Figure 4-53 Sealer Installation

(Rev. 2004) *All information subject to change without notice.*
6SE483 0401 Copyright © 2004 DETROIT DIESEL CORPORATION

12. Install J 35988-3A, part of tool set J 35988-D, to the fixture tool. See Figure 4-54.

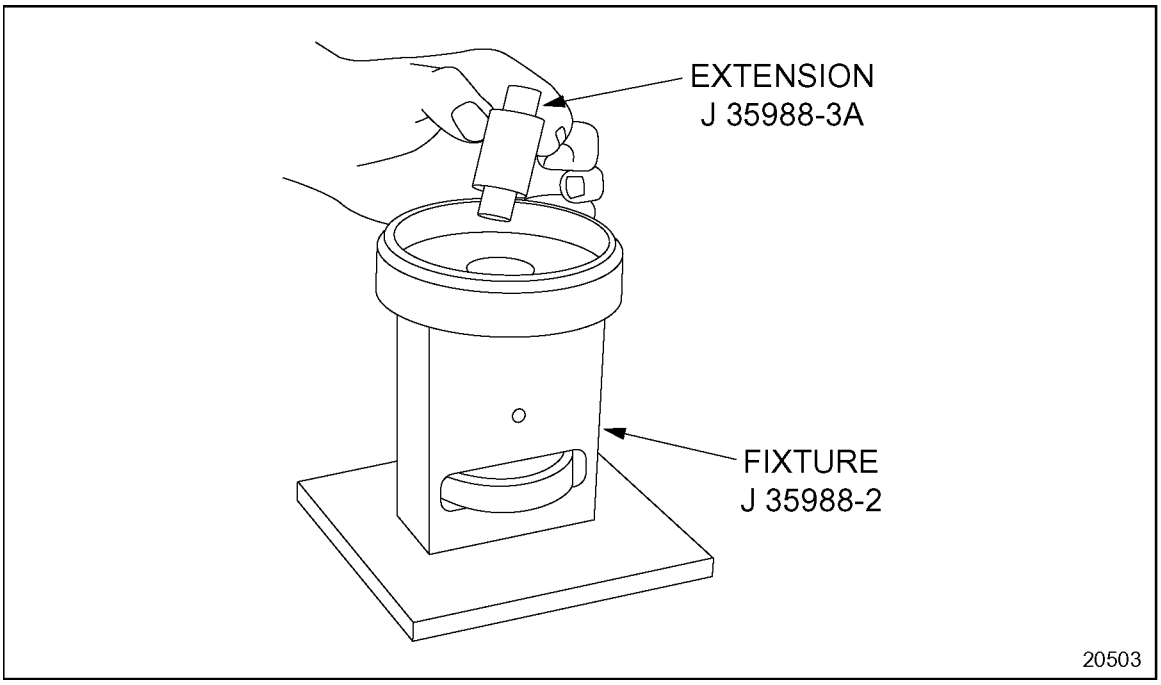

Figure 4-54 Support Installation (FM)

13. Install the water pump housing assembly to the fixture. See Figure 4-55.

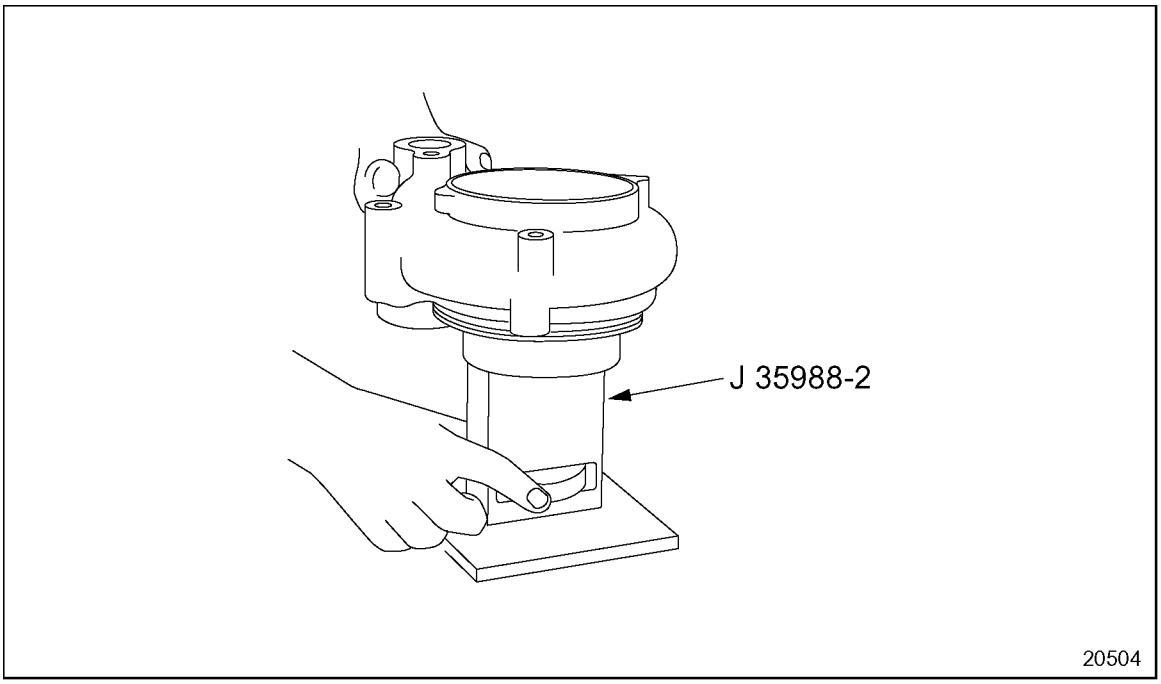

Figure 4-55 Water Pump Impeller Installation Set-Up (FM)

 Copyright © 2004 DETROIT DIESEL CORPORATION

NOTICE:
The extension must contact and support the shaft when installing the water seal and impeller to prevent damage to the bearings.

14. Turn the adjustor wheel to raise the extension until it contacts the drive shaft in the water pump housing.
15. Apply Loctite® primer (Locquic Primer N, Part No. 764) by swabbing onto the I.D. of the rotor of the seal.
16. Install a new water seal over the drive shaft and seat it in the water pump housing. See Figure 4-56.

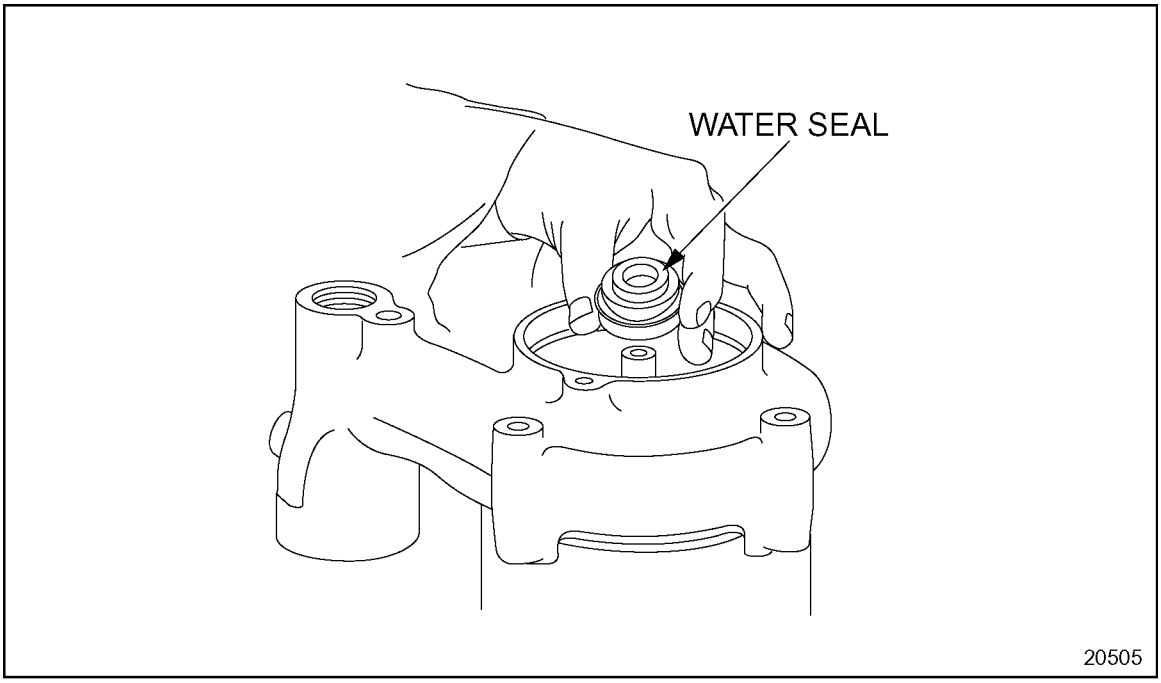

Figure 4-56 Water Seal Insertion (FM)

(Rev. 2004) *All information subject to change without notice.*
6SE483 0401 Copyright © 2004 DETROIT DIESEL CORPORATION

17. Position tool J 35988-1, part of tool set J 35988-D, over the water seal. See Figure 4-57.

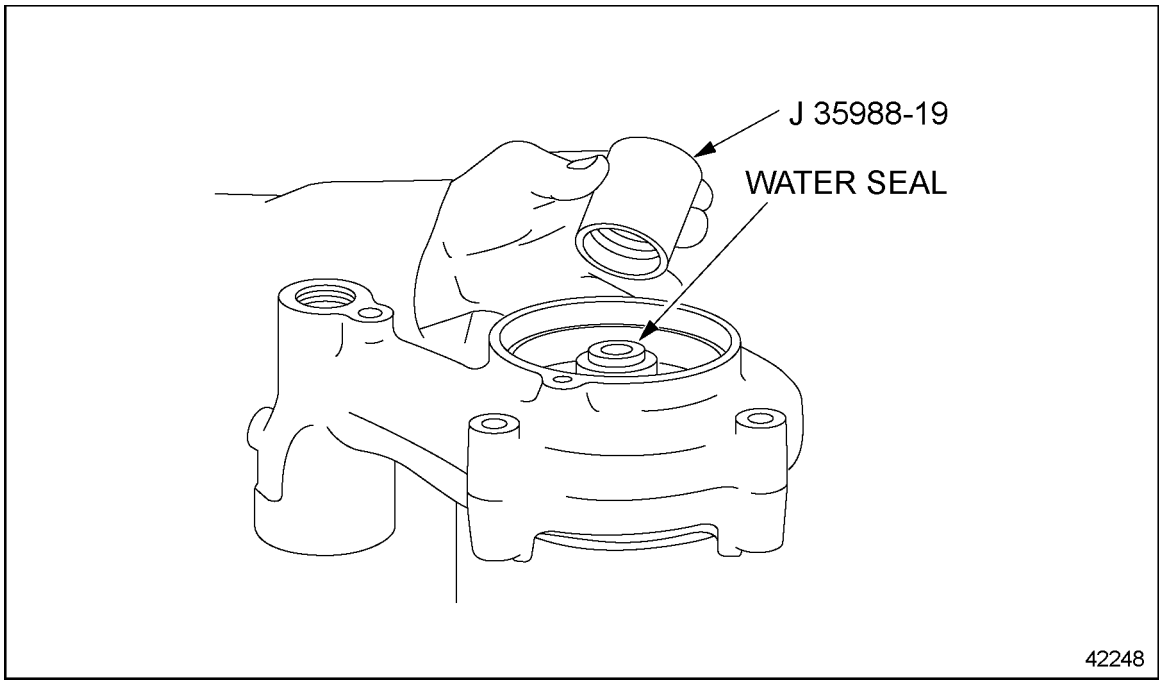

Figure 4-57 Water Seal Installation (FM)

 Copyright © 2004 DETROIT DIESEL CORPORATION

18. Press the water seal into the housing until the flange of the seal case contacts the water pump housing a full 360°. Remove tool J 35988-19, part of tool set J 35988-D.
19. With the water pump housing still housed in toolJ 35988-2, part of tool set J 35988-D, and located on a press bed, install the water pump impeller to the end of the drive shaft. Position the impeller so that the machined end is parallel with the housing machined face. See Figure 4-58.

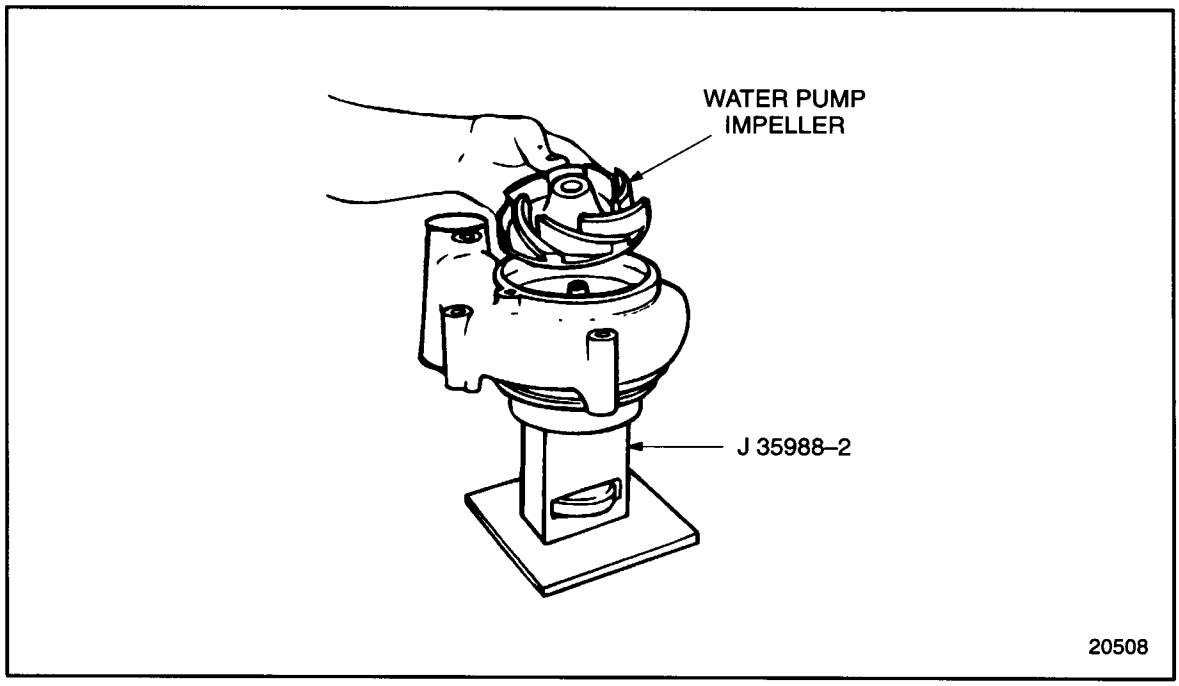

Figure 4-58 Water Pump Impeller Installation (FM)

(Rev. 2004) *All information subject to change without notice.*
6SE483 0401 Copyright © 2004 DETROIT DIESEL CORPORATION

20. Press the impeller on until it is flush with the end of the drive shaft. See Figure 4-59.

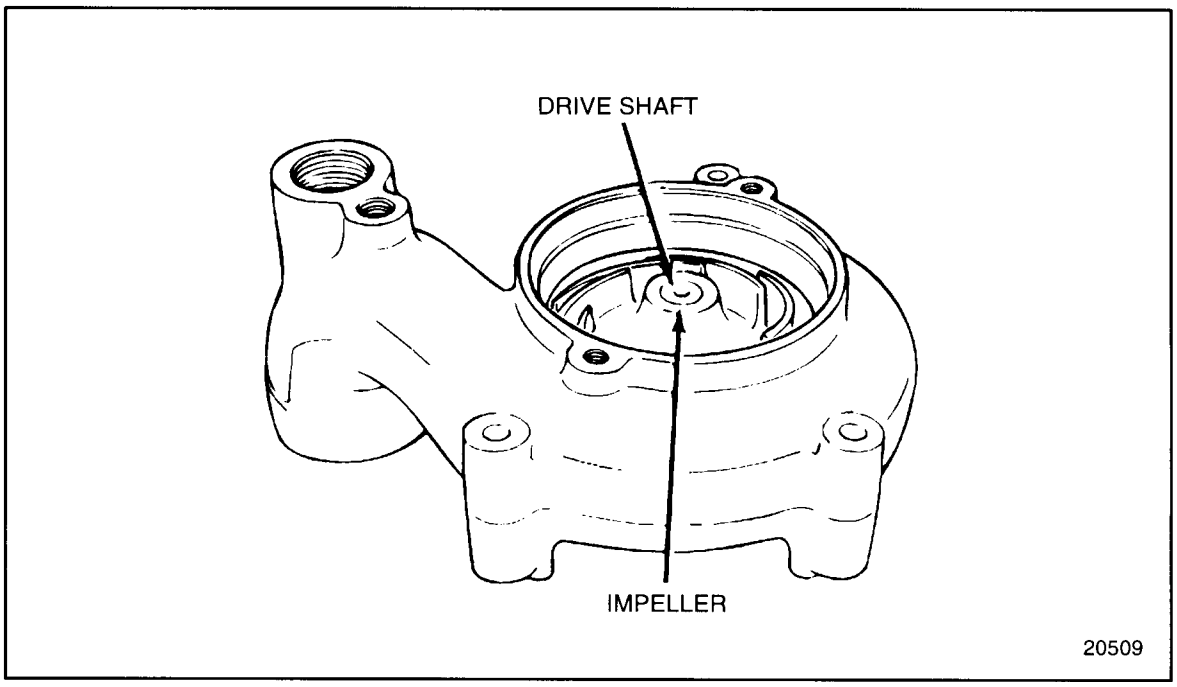

Figure 4-59 Water Pump Impeller Location (FM)

21. Turn the housing over and place it face (impeller side) down on fixtureJ 35988-2, part of tool set J 35988-D.

 Copyright © 2004 DETROIT DIESEL CORPORATION

22. Install the Woodruff key to its slot in the drive shaft. Tap the key with a brass hammer to seat it squarely in the slot. See Figure 4-60.

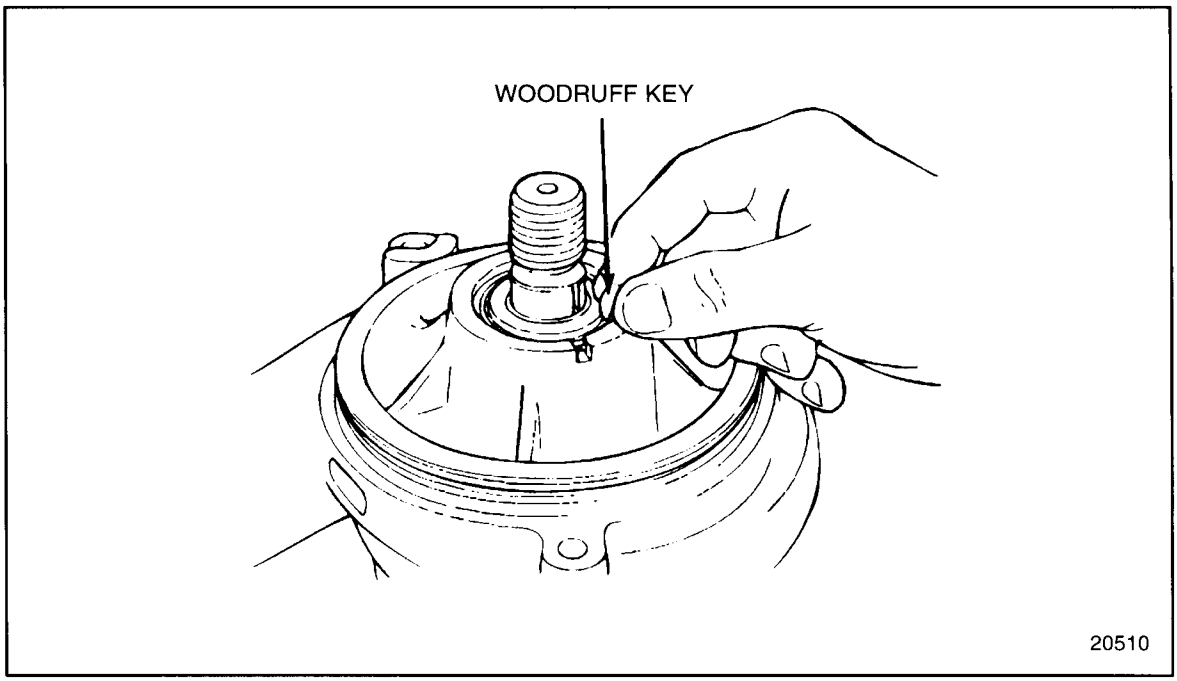

Figure 4-60 Woodruff Key Installation (FM)

23. Install the water pump drive gear to the drive shaft, indexing the slot in the gear with the Woodruff key.

NOTICE:
Extension tool J 35988-3, part of tool set J 35988-D, must support the shaft. This is necessary to prevent damage to the bearings when pressing the gear onto the shaft.

24. Turn the adjustor wheel to raise the extension toolJ 35988-3, part of tool set J 35988-D, until it contacts the shaft.

(Rev. 2004) *All information subject to change without notice.*
6SE483 0401 Copyright © 2004 DETROIT DIESEL CORPORATION

25. Using the small end of toolJ 35988-1, part of tool set J 35988-D, press the drive gear down onto the drive shaft until it touches the bearings. See Figure 4-61.

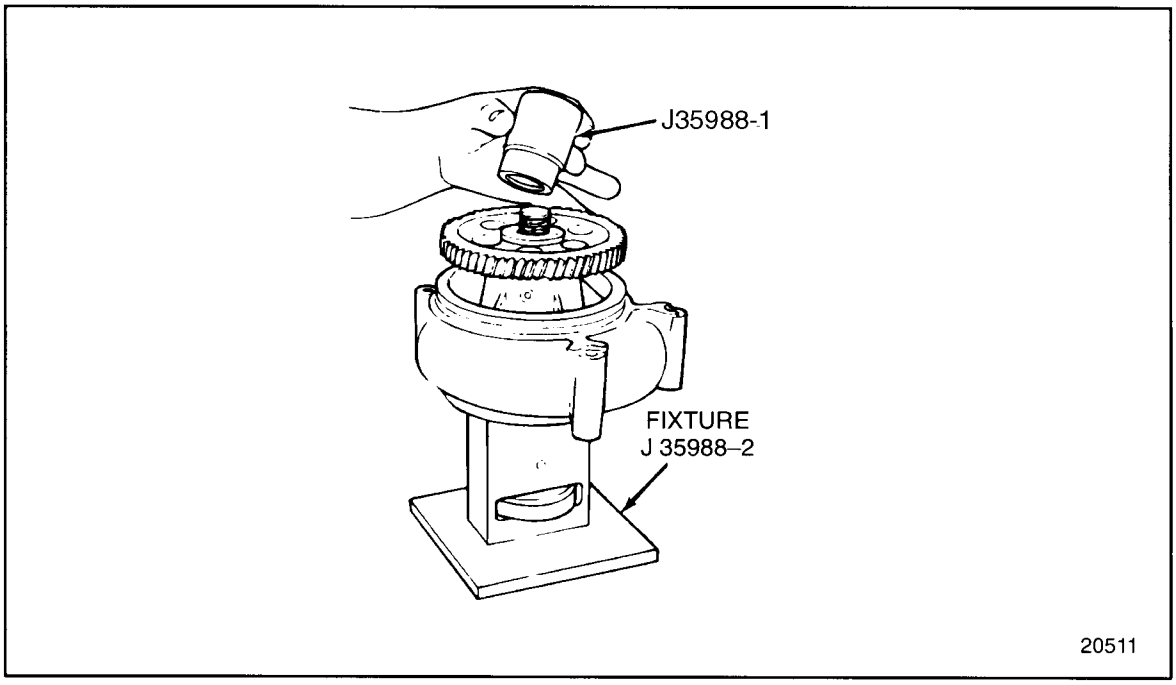

Figure 4-61 Water Pump Drive Gear Installation (FM)

26. Install locknut to the drive shaft threads. See Figure 4-62.

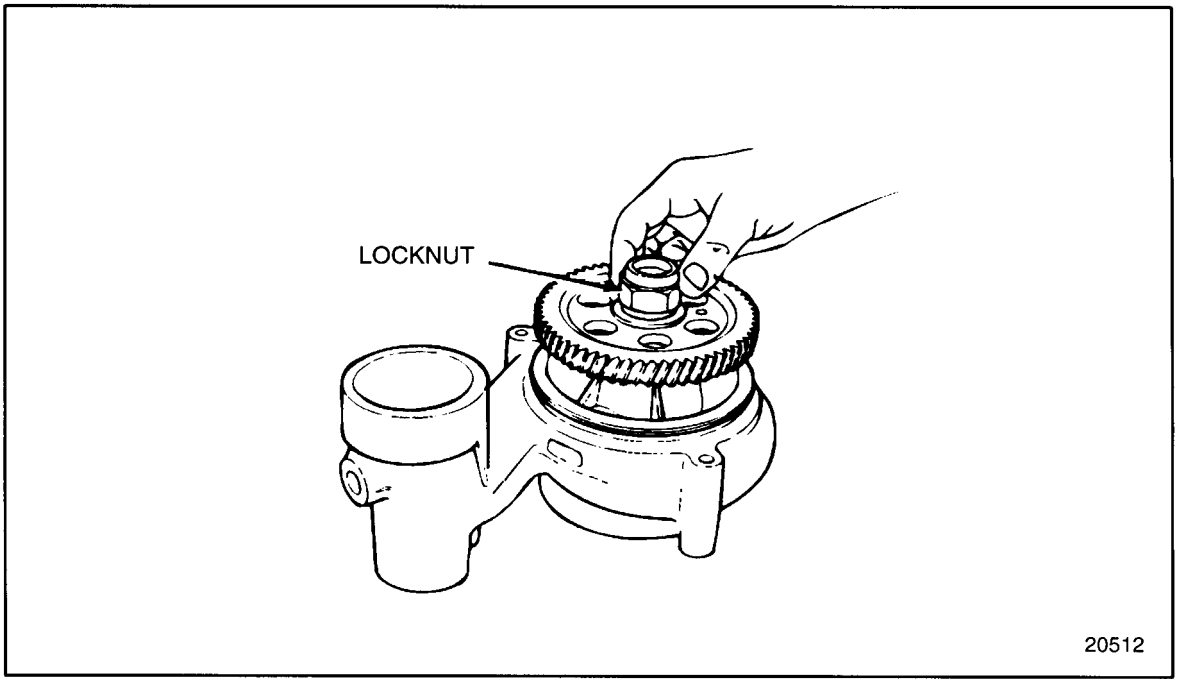

Figure 4-62 Locknut Installation (FM)

 Copyright © 2004 DETROIT DIESEL CORPORATION

27. Using J 35988-5, part of tool set J 35988-D, with a breaker bar to hold the gear and shaft, tighten the locknut with a torque wrench to 203-230 N·m (150-170 lb·ft) torque.

4.3.6.1 Assembly Integrity Test

Verify the assembly integrity as follows:

1. Turn the pump over and install J 35687 into the tapped holes provided in the impeller.
2. Clamp J 35988-5, part of tool set J 35988-D, (legs up) in a vise and position the lightening holes in the drive gear over the legs of the tool.
3. Using a 1/2 in.-drive torque wrench in the hole provided in the center of J 35687, apply 68 N·m (50 lb·ft) torque in either direction.
   [a] The gear and impeller must withstand 68 N·m (50 lb·ft) torque without slipping.
   [b] If the torque specification is not satisfied, disassemble water pump and replace the impeller. Refer to section 4.3.3.
4. Using a dial indicator with magnetic base, measure the total run-out of the water pump drive gear at four places, at 90 degree intervals. Maximum allowable run-out is 0.0635 mm (0.0025 in.). See Figure 4-63.

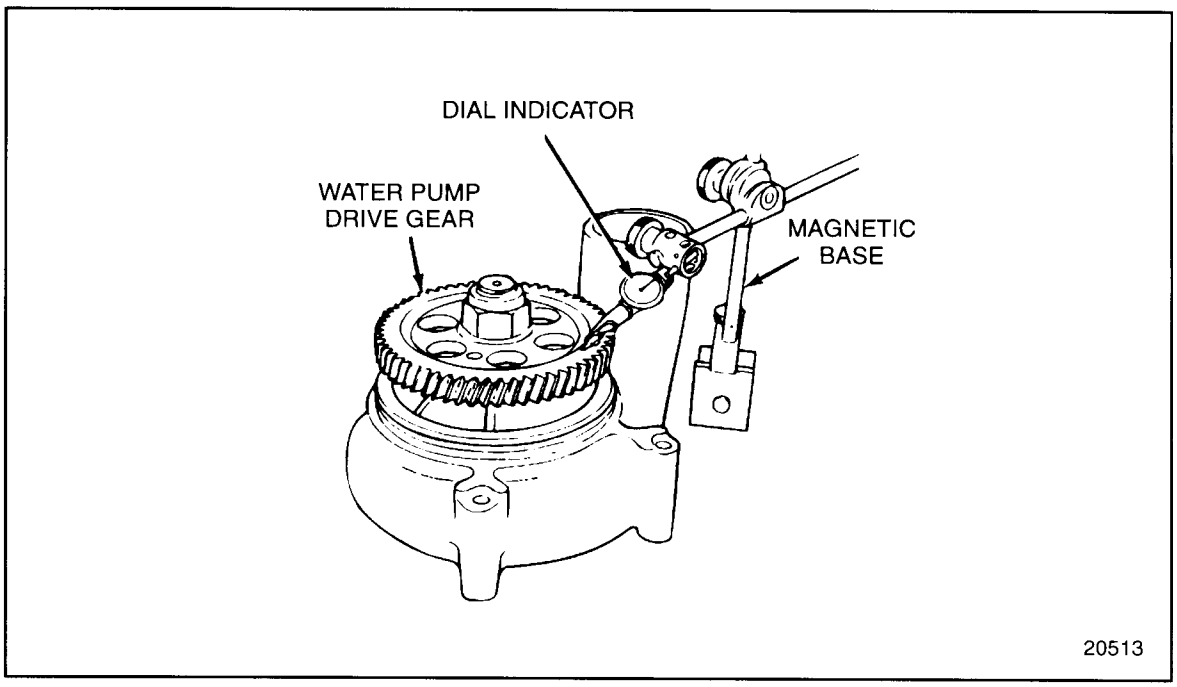

Figure 4-63 Measuring Water Pump Drive Gear Runout (FM)

   [a] If specifications are exceeded, disassemble the water pump and check for burrs or foreign particles. Refer to section 4.3.3.
   [b] If specifications are with limits, reuse part.

(Rev. 2004) *All information subject to change without notice.*
6SE483 0401 Copyright © 2004 DETROIT DIESEL CORPORATION

4.3.7 Installation of Front Mounted Water Pump

Install the water pump as follows:

1. Coat the two seal rings with clean engine oil. Install the larger seal ring to the groove in the water pump housing. Install the smaller seal ring to the groove in the water pump cover. Coat the water pump drive gear with clean engine oil.
2. Install the water pump to the engine, meshing the water pump drive gear with the bull gear.
3. Install the three water pump housing-to-gear case cover bolts. Tighten the bolts alternately and evenly to draw the water pump straight into the engine. Torque the bolts to 30-38 N·m (22-28 lb·ft).
4. Measure the gear backlash. Refer to section 1.22.2.1.
5. Install the water pump cover to the water pump with two bolts. Torque the bolts alternately and evenly to draw the cover straight into the water pump housing. Torque the bolts to 30-38 N·m (22-28 lb·ft).
6. Slide the coolant hoses into position and tighten the hose clamps.
7. Fill the cooling system. Refer to section 13.13.4 of engine maintenance.

 Copyright © 2004 DETROIT DIESEL CORPORATION

4.4 CHARGE AIR COOLER RAW WATER PUMP (KEEL-COOLED COMMERCIAL MARINE)

The centrifugal-type water pump circulates raw water through the charge air cooler (CAC) on keel-cooled marine engines. The drive end of the pump shaft is supported by a sealed double-row combination radial and thrust ball bearing. The pump shaft serves as the inner race of the bearing.

The pump is mounted to the rear end of the gear case on the intake side of the engine. The drive coupling, pressed on the end of the pump shaft, has an integral oil thrower that shrouds the flange end of the pump body and deflects the oil away from the bearing. See Figure 4-64.

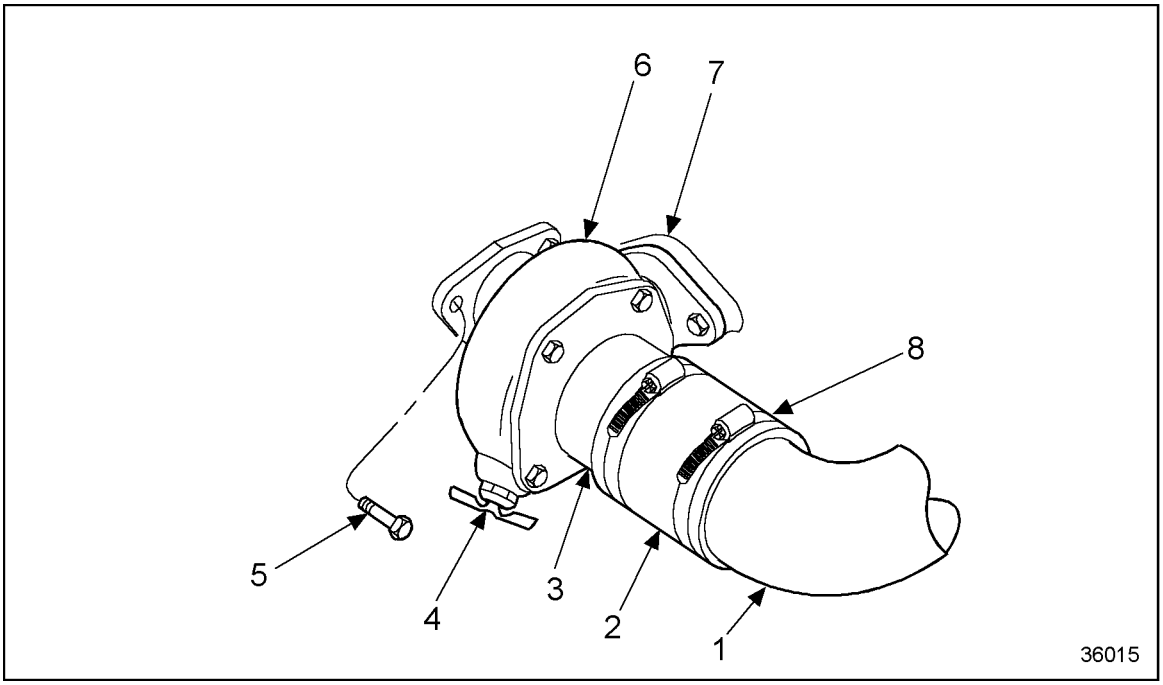

1. To Charge Cooler
2. Hose
3. Pump Cover
4. Drain Cock
5. Bolt
6. Water Pump
7. Inlet Flange
8. Clamp

Figure 4-64 CAC Water Pump Mounting

NOTE:
The high capacity water pump has a shaft bearing assembly, unitized seal assembly, drive coupling, and ceramic insert.

(Rev. 2004) *All information subject to change without notice.*
6SE483 0401 Copyright © 2004 DETROIT DIESEL CORPORATION

4.4.1 Replacement of CAC Water Pump

To determine if repair or replacement is necessary, perform the following procedure. See Figure 4-65.

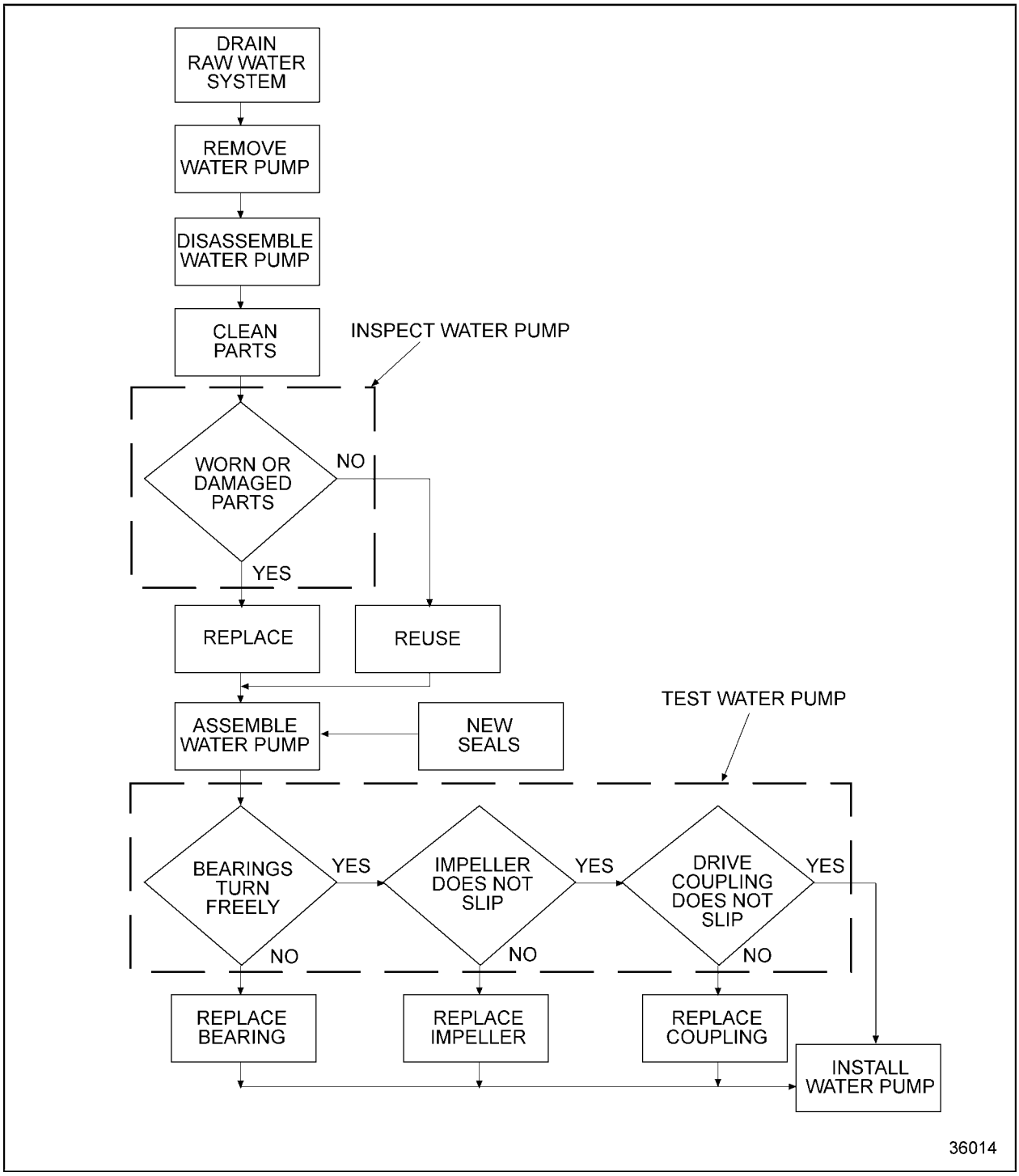

Figure 4-65 Flowchart for Repair or Replacement of CAC Water Pump

 Copyright © 2004 DETROIT DIESEL CORPORATION

4.4.2 Removal of CAC Water Pump

Remove the water pump as follows:

1. Drain the raw water from the charge air cooler system and open the drain cock in the pump body.
2. Loosen the hose clamps and slide the water pump inlet hose back onto the charge cooler inlet pipe.
3. Remove the nuts and bolts that attach the pump to the raw water supply pipe.
4. Remove the bolts and lock washers that attach the pump mounting flange to the drive assembly.
5. Withdraw the pump and remove the gasket.

(Rev. 2004) *All information subject to change without notice.*
6SE483 0401 Copyright © 2004 DETROIT DIESEL CORPORATION

4.4.3 Disassembly of CAC Water Pump

Disassemble the water pump as follows:

1. Remove the pump cover and gasket.

NOTE:
Clean any corrosion from around the impeller and shaft before separating the shaft and bearing assembly from the impeller, seal, and pump body.

NOTICE
Shaft bearing damage may occur on the water pump if an excessive thrust load is applied to the bearing assembly during pump disassembly for seal replacement. For this reason DDC recommends replacing the shaft and bearing assembly of the water pump whenever the seal is replaced and /or at time of water pump overhaul.

2. Support the pump on its mounting flange in an arbor press. See Figure 4-66. Place a short steel rod on the end of the shaft and press the shaft and bearing assembly from the impeller, seal, and pump body.

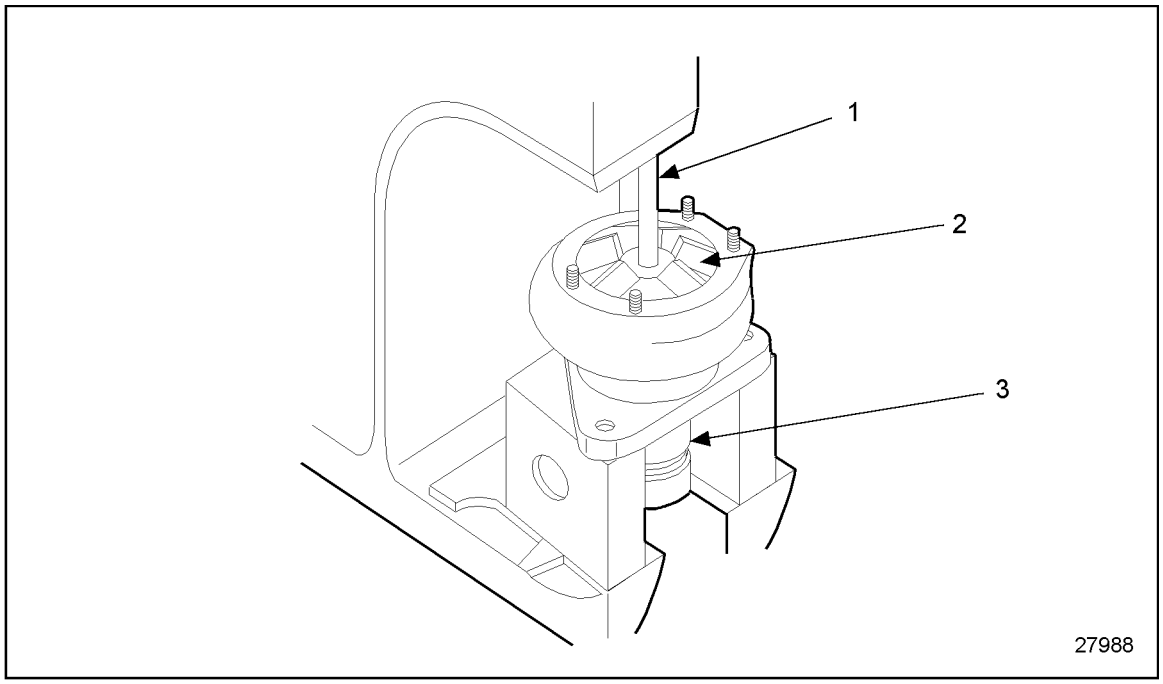

1. Steel Bar
2. Impeller
3. Shaft and Bearing Assembly

Figure 4-66 Pressing Pump Shaft from Impeller

 Copyright © 2004 DETROIT DIESEL CORPORATION

3. Remove the impeller and seal assembly from the pump body.
4. Remove the pump drive coupling from the shaft with tool J 1930. See Figure 4-67.

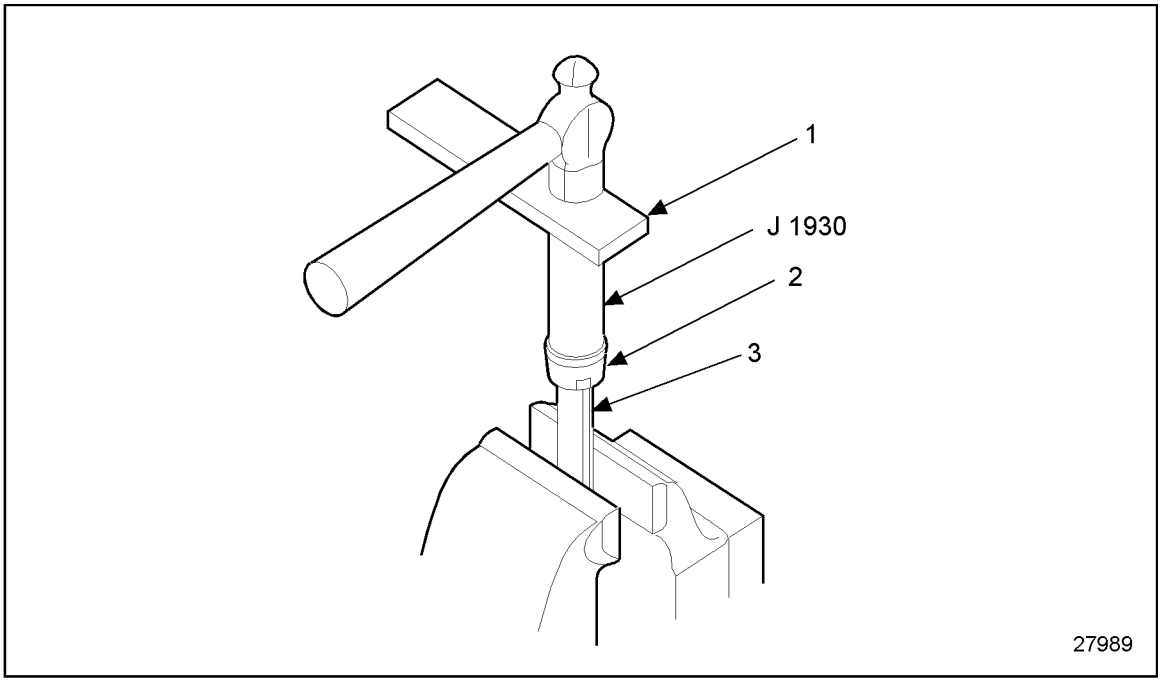

1. Steel Bar
2. Drive Coupling
3. Steel Rod

Figure 4-67 Removing Pump Drive Coupling from Shaft

4.4.3.1 Inspection of CAC Water Pump

Inspect the water pump as follows:

1. Visually inspect the parts for cracks, wear, or other damage.
   [a] If parts are cracked, worn, or other damage is evident, replace damaged or worn parts.
   [b] If no damage is found, reuse remaining components.

(Rev. 2004) *All information subject to change without notice.*
6SE483 0401 Copyright © 2004 DETROIT DIESEL CORPORATION

4.4.4 Assembly of CAC Water Pump

Assemble the water pump as follows:

NOTICE
To avoid possible engine damage, the sealed pump shaft bearing must not be immersed in a cleaning fluid, since dirt may be washed in and fluid cannot entirely be removed.

1. Clean all of the parts, except the shaft and bearing assembly.
2. Replace the shaft and bearing assembly and the seal assembly.
3. Support the pump body on the bed of an arbor press, impeller end down. Insert the long (impeller) end of the shaft and bearing assembly into the body.

NOTICE
The shaft and bearing assembly will be damaged if it is installed by applying pressure to the shaft or inner race.

4. Press against the outer race of the bearing until the bearing is flush with the end of the pump body.
5. To eliminate possible coolant leakage, apply a light coat of Loctite® 290 sealant to the outside diameter of the new seal.

 Copyright © 2004 DETROIT DIESEL CORPORATION

6. Invert the pump so that the impeller end faces up. See Figure 4-68.

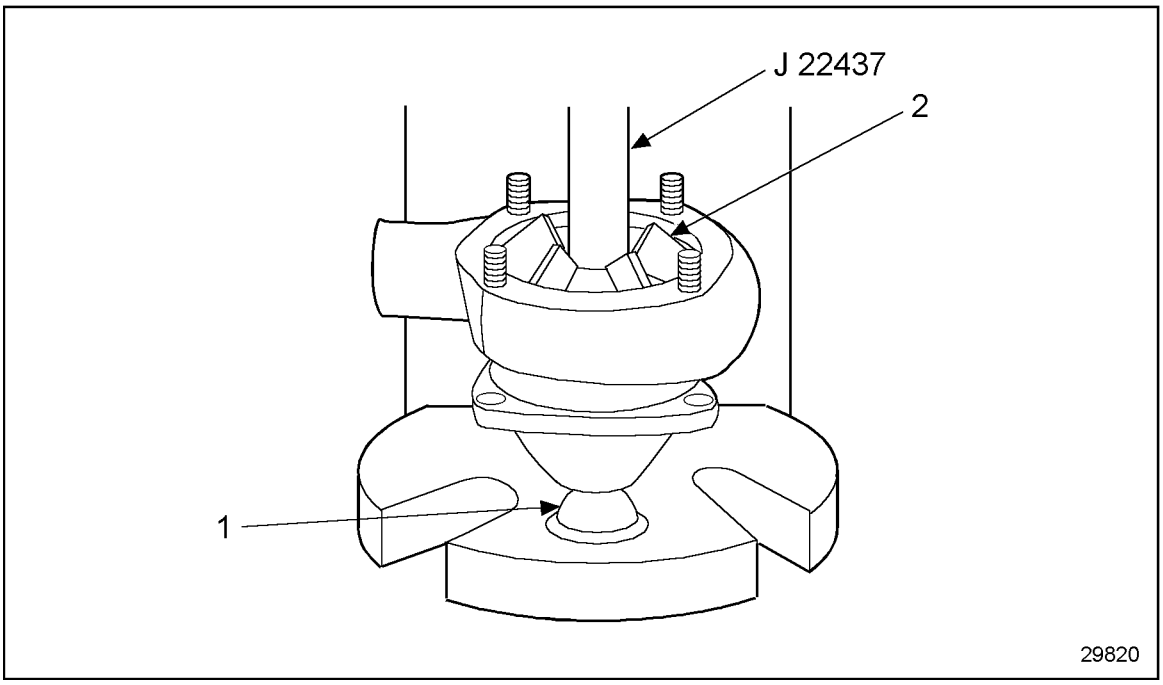

1. Shaft Support
2. Impeller

Figure 4-68 Installing Water Pump Impeller

7. With the pump body and bearing shaft properly supported, place a fresh unitized seal over the shaft. Tool J 38858 *must* be used to set the seal to its proper installed height. Using tool J 38858, press the seal into place.
8. Ensure the mating surfaces of the water seal and impeller are free of dirt, metal particles, and oil film.

NOTICE
The bearing shaft end must be supported during this operation. Do not press against the outer race of the bearing. This can damage the bearing.

9. Support the bearing end of the shaft on the bed of an arbor press. Using tool J 22347, press the impeller onto the shaft. The distance between the end of the shaft and the face of the impeller hub is 0.0078 — 0.083 mm (0.031 - 0.033 in.).
10. Invert the pump. With the impeller end of the shaft properly supported on the arbor press, press the drive coupling onto the shaft until it is flush with the end of the shaft.

NOTE:
When installed, the drive coupling must hold 41 N·m (30 lb·ft) minimum torque.

(Rev. 2004) *All information subject to change without notice.*
6SE483 0401 Copyright © 2004 DETROIT DIESEL CORPORATION

11. Rotate the shaft by hand to ensure the rear faces of the impeller blades do not rub against the pump body.
12. If previously removed, install the drain cock in the pump body.

4.4.5 Installation of CAC Water Pump

Install the water pump as follows:

1. Ensure the intermediate shaft coupling is secure.
   [a] If it was previously removed, insert the splined end of the coupling into the mating splines in the drive assembly.
   [b] Install the bolts and lockwashers, then draw the coupling in place with the bolts.
   [c] Torque the bolts to 20 – 26 N·m (15 – 19 lb·ft).
2. Slide the charge cooler inlet hose in place and secure it with the hose clamps.
3. Close the pump drain cock.
4. Remove and check the condition of the raw water pump electrodes (zincs). Replace if required.
5. Fill the raw water cooling system.

⚠ CAUTION:

Diesel engine exhaust and some of its constituents are known to the State of California to cause cancer, birth defects, and other reproductive harm.

- ☐ **Always start and operate an engine in a well ventilated area.**
- ☐ **If operating an engine in an enclosed area, vent the exhaust to the outside.**
- ☐ **Do not modify or tamper with the exhaust system or emission control system.**

6. Start the engine and check for leaks.

 Copyright © 2004 DETROIT DIESEL CORPORATION

4.5 THERMOSTAT

The temperature of the engine coolant is controlled by two blocking-type thermostats located in a housing attached to the right side of the cylinder head. See Figure 4-69.

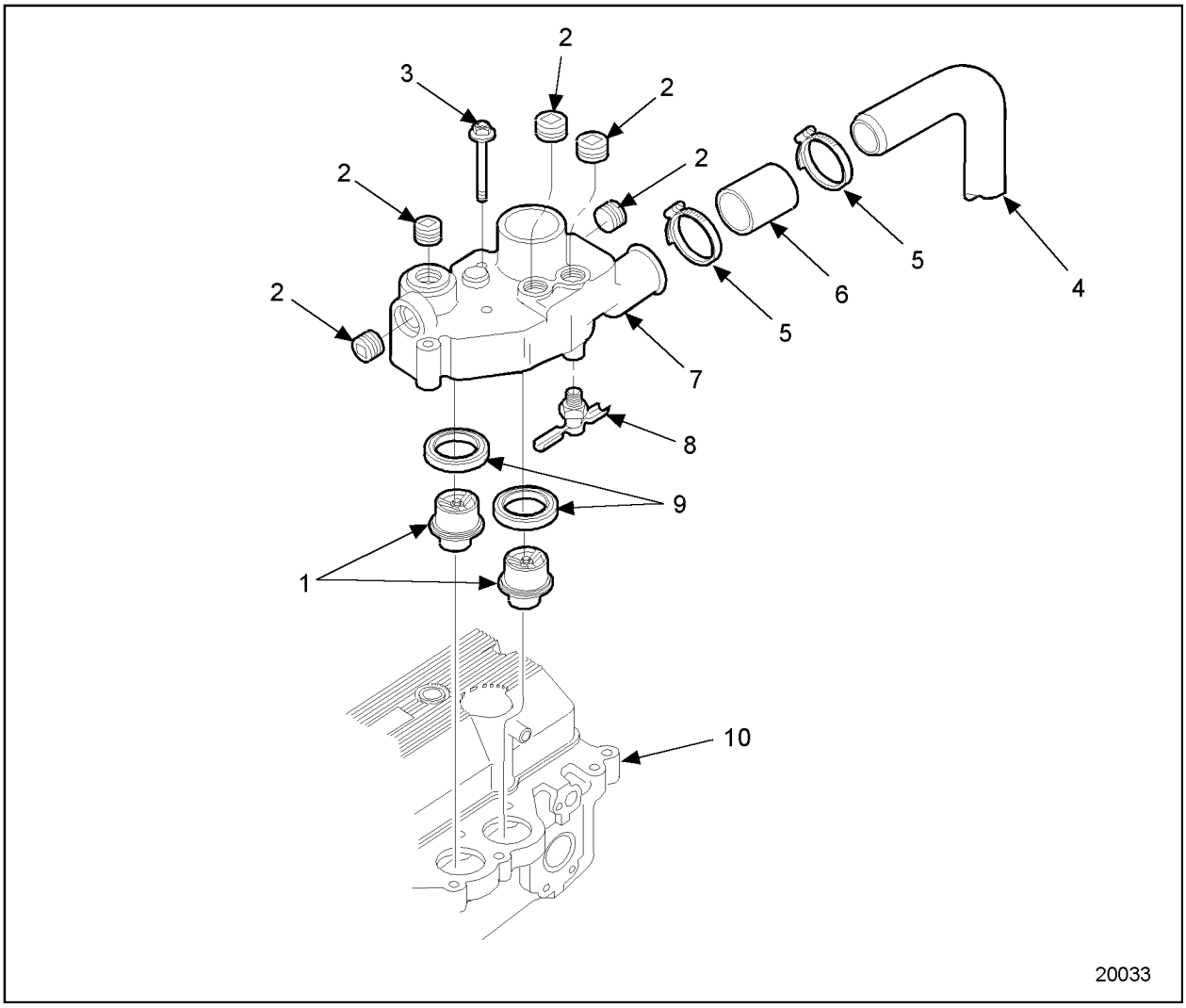

1. Thermostat (2)
2. Pipe Plug
3. Bolt, Thermostat Housing-to-Cylinder Head (4)
4. Bypass Tube
5. Hose Clamp (2)
6. Hose, Coolant
7. Thermostat Housing
8. Drain Cock
9. Seal, Thermostat Housing (2)
10. Cylinder Head

Figure 4-69 Thermostat and Related Parts

(Rev. 2004) *All information subject to change without notice.*
6SE483 0401 Copyright © 2004 DETROIT DIESEL CORPORATION

In addition to a rubber seal that is part of the thermostat, there is a lip-type seal for each thermostat that is installed in a bore in the thermostat housing. See Figure 4-70.

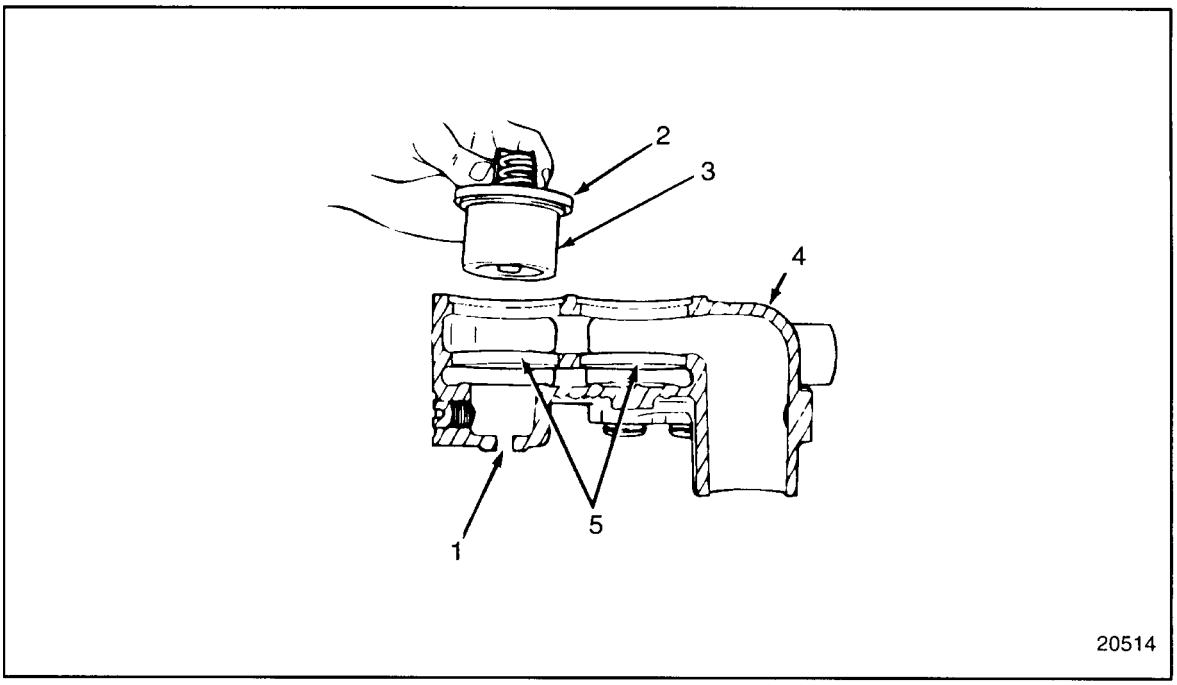

1. Connection Opening, Vent Line
2. Seal, Thermostat (2)
3. Thermostat (2)
4. Thermostat Housing
5. Seals, Thermostat Housing (2)

Figure 4-70 Thermostat Seals

 Copyright © 2004 DETROIT DIESEL CORPORATION

At coolant temperatures below approximately 86 - 89°C (186 - 193°F) for vehicle, industrial, and keel-cooled marine engines or 69 – 73°C (156 – 163°F) for heat exchanger-cooled marine engines, the thermostat valves remain closed and block the flow of coolant from the engine to the radiator or heat exchanger. During this period, all of the coolant in the system is recirculated through the engine and is directed back to the suction side of the water pump via a bypass tube. As the coolant temperature rises above 86 - 89°C (186 - 193°F) for vehicle, industrial, and keel-cooled marine engines or 69 — 73°C (156 — 163°F) for heat exchanger-cooled marine engines, the thermostat valves start to open, restricting the bypass system, and allowing a portion of the coolant to circulate through the radiator or heat exchanger. When the coolant temperature reaches approximately 97°C (207°F) (or 82°C [179°F] for heat exchanger-cooled marine engines), the thermostat valves are fully open, the bypass system is blocked off, and the coolant is directed through the radiator or heat exchanger. See Figure 4-71.

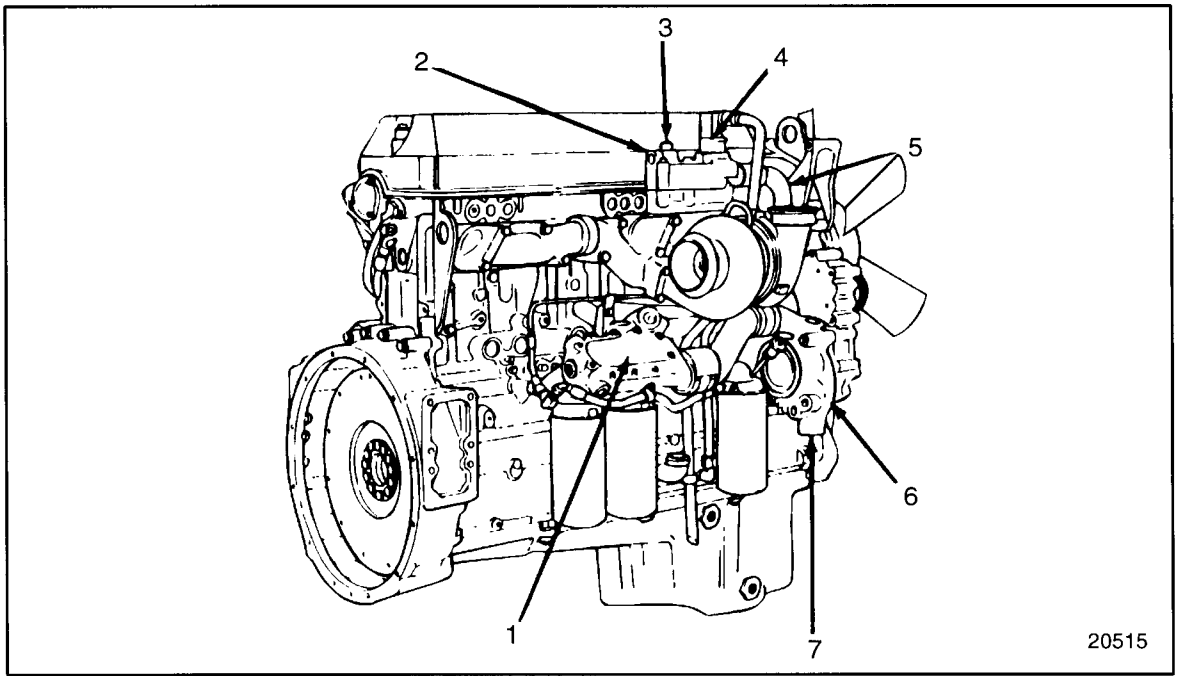

1. Oil Cooler Housing
2. Thermostat Housing
3. Vent Line Outlet
4. Water Outlet (To Radiator)
5. Water Bypass Tube
6. Water Pump
7. Water Inlet

Figure 4-71 Cooling System Operation

Properly operating thermostats are essential for efficient operation of the engine. If the engine operating temperature deviates from the normal range of 86 - 99°C (186-210°F) (or 69 – 82°C [156 — 179°F] for heat exchanger-cooled marine engines), inspect and replace the thermostats, if necessary.

(Rev. 2004) *All information subject to change without notice.*
6SE483 0401 Copyright © 2004 DETROIT DIESEL CORPORATION

4.5.1 Repair or Replacement of Thermostats

To determine if repair or replacement of the thermostat is necessary, perform the following procedure. See Figure 4-72.

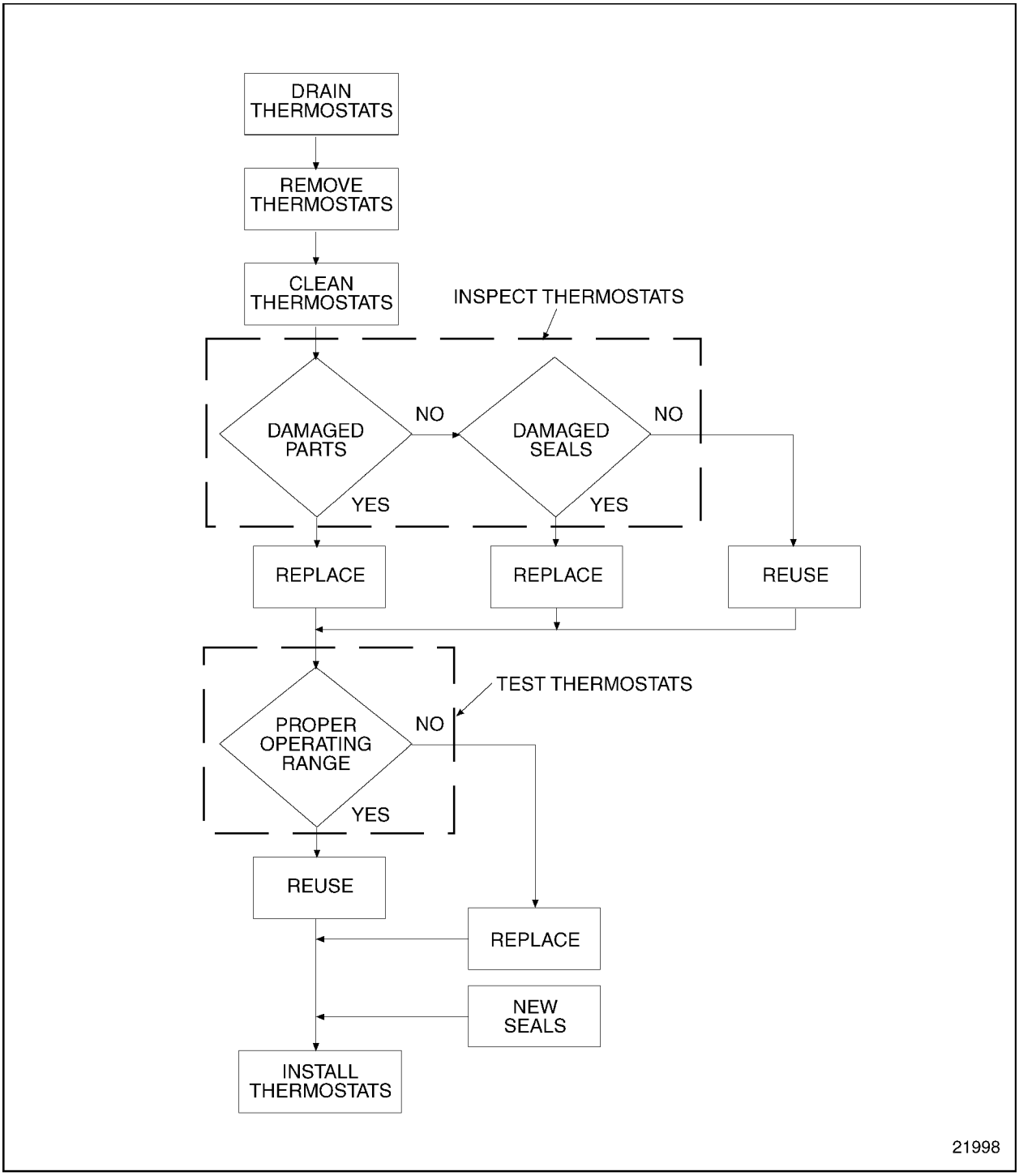

Figure 4-72 Flowchart for Repair or Replacement of Thermostats

 Copyright © 2004 DETROIT DIESEL CORPORATION

4.5.2 Draining and Removal of Thermostats

Drain the thermostats as follows:

CAUTION:

To avoid injury from the expulsion of hot coolant, never remove the cooling system pressure cap while the engine is at operating temperature. Remove the cap slowly to relieve pressure. Wear adequate protective clothing (face shield or safety goggles, rubber gloves, apron, and boots).

1. Slowly open the coolant pressure control (radiator) cap.
2. Open the drain cock located on the bottom of the thermostat housing.
3. Drain the cooling system so that the coolant is below the thermostat level.

Remove the thermostats as follows:

1. Loosen the hose clamps on the coolant hoses connected to the thermostat housing.
2. Slide the hoses off the housing.
3. Disconnect the vent line and any other lines which are connected to the thermostat housing.
4. Remove the four thermostat housing-to-cylinder head attaching bolts.
5. Remove the thermostat housing assembly from the engine.
6. Remove the thermostats from the thermostat housing.
7. Remove and discard the thermostat housing seals.

(Rev. 2004) *All information subject to change without notice.*
6SE483 0401 Copyright © 2004 DETROIT DIESEL CORPORATION

4.5.2.1 Inspection of Thermostats

Inspect thermostats as follows:

1. Visually inspect all parts for wear or damage.
   [a] If wear or damage is found, replace parts.
   [b] If wear or damage is not found, reuse parts.
2. Visually inspect thermostat body seal for damage, cracks or nicks.
   [a] If any damage is noted, replace seal.
   [b] If no damage is found, reuse parts.

4.5.3 Cleaning of Thermostats

Clean the thermostats as follows:

1. Clean all of the parts in clean fuel oil.

CAUTION:

To avoid injury from flying debris when using compressed air, wear adequate eye protection (face shield or safety goggles) and do not exceed 40 psi (276 kPa) air pressure.

2. Dry all parts with compressed air.

 Copyright © 2004 DETROIT DIESEL CORPORATION

4.5.4 Testing Thermostat

Check the operation of a thermostat as follows:

NOTICE:
Ensure thermostat is operational. If thermostat motion becomes impaired, overheating may result. An engine which has overheated may also cause the thermostats to become inoperative. A thermostat stuck in the open position may not allow the engine to reach normal operating temperature. The incomplete combustion of fuel due to cold operation will result in build-up of carbon deposits on the pistons, rings and valves. A thermostat that does not fully open may cause engine overheating.

1. Immerse the thermostat in a metal container of water. See Figure 4-73.

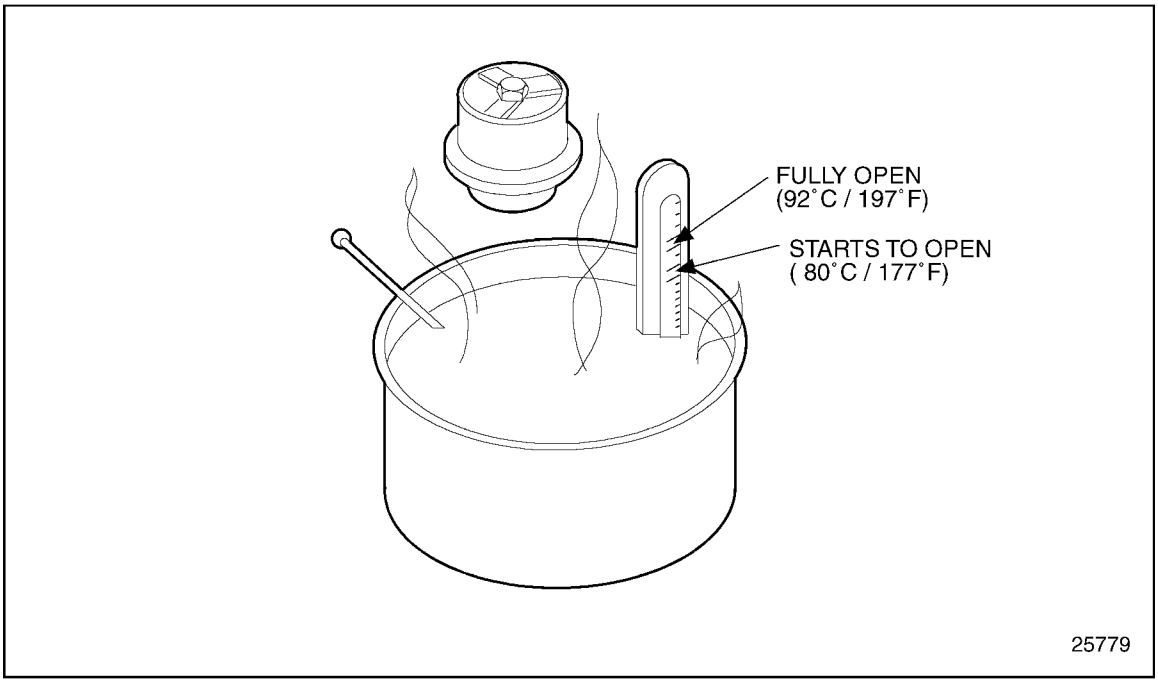

Figure 4-73 Checking Thermostat Operation

2. Place a thermometer in the container using care not to allow the thermometer to touch the bottom or sides of the container.
3. While slowly agitating the water to maintain an even temperature, apply heat to the container. Allow at least 10 minutes for the thermostats to react before determining if the thermostats are opening in the correct temperature range.

(Rev. 2004) *All information subject to change without notice.*
6SE483 0401 Copyright © 2004 DETROIT DIESEL CORPORATION

⚠ CAUTION:

To avoid injury from the expulsion of hot coolant, never remove the cooling system pressure cap while the engine is at operating temperature. Remove the cap slowly to relieve pressure. Wear adequate protective clothing (face shield or safety goggles, rubber gloves, apron, and boots).

4. As the water is heated, the thermostat should begin to open. The nominal opening temperature (stamped on the thermostat), the start-to-open temperature range, and the full open temperature are listed in Table 4-1.

Nominal Opening Temperature (Stamped on the Thermostat)	Thermostat Start-to-Open Temperature Range	Fully Open Temperature
160°F (71°C)	156-163°F (69-73°C)	179°F (82°C)
180°F (82°C)	176-183°F (80-84°C)	197°F (92°C)
190°F (88°C)	186-193° (86-89°)	207°F (97°C)

Table 4-1 Thermostat Nominal, Start-to-Open, and Fully Open Temperatures

5. If thermostat does not operate properly replace.

 Copyright © 2004 DETROIT DIESEL CORPORATION

4.5.5 Installation of Thermostat and Seal

Install new thermostats as follows:

1. Position a new seal onto seal installer, J 8550, and handle, J 7079-2. See Figure 4-74.

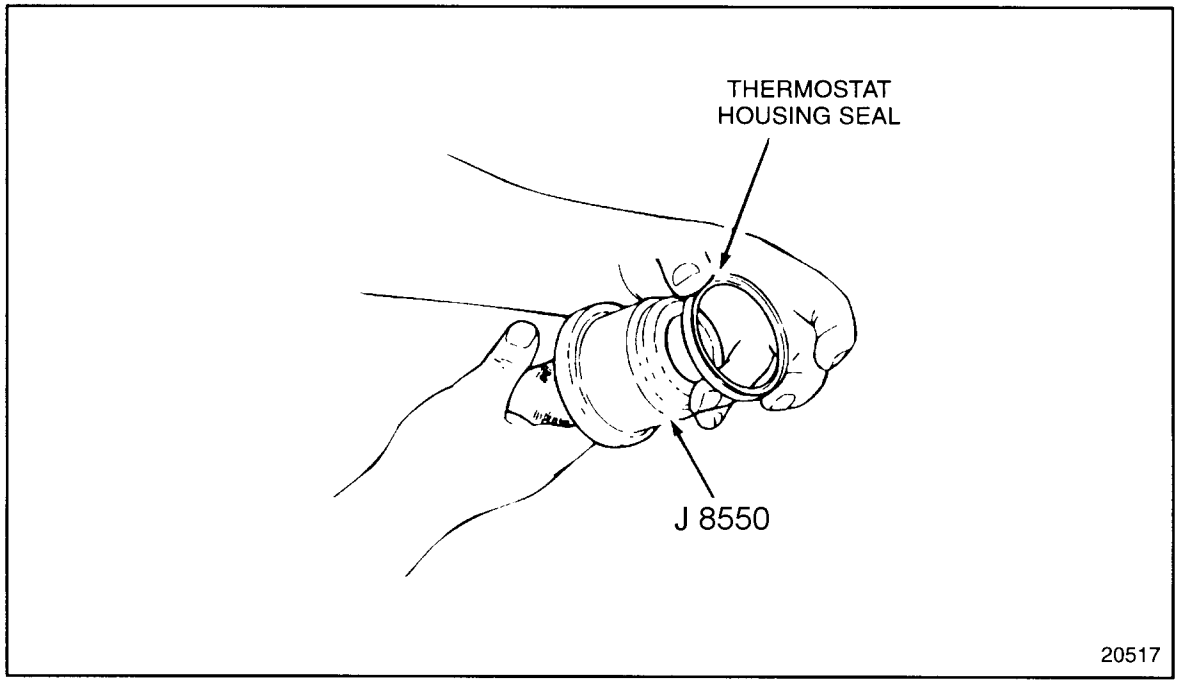

Figure 4-74 Positioning the Seal onto Seal Installer

(Rev. 2004) *All information subject to change without notice.*
6SE483 0401 Copyright © 2004 DETROIT DIESEL CORPORATION

2. Support the thermostat housing on a work bench so that it is level. See Figure 4-75.

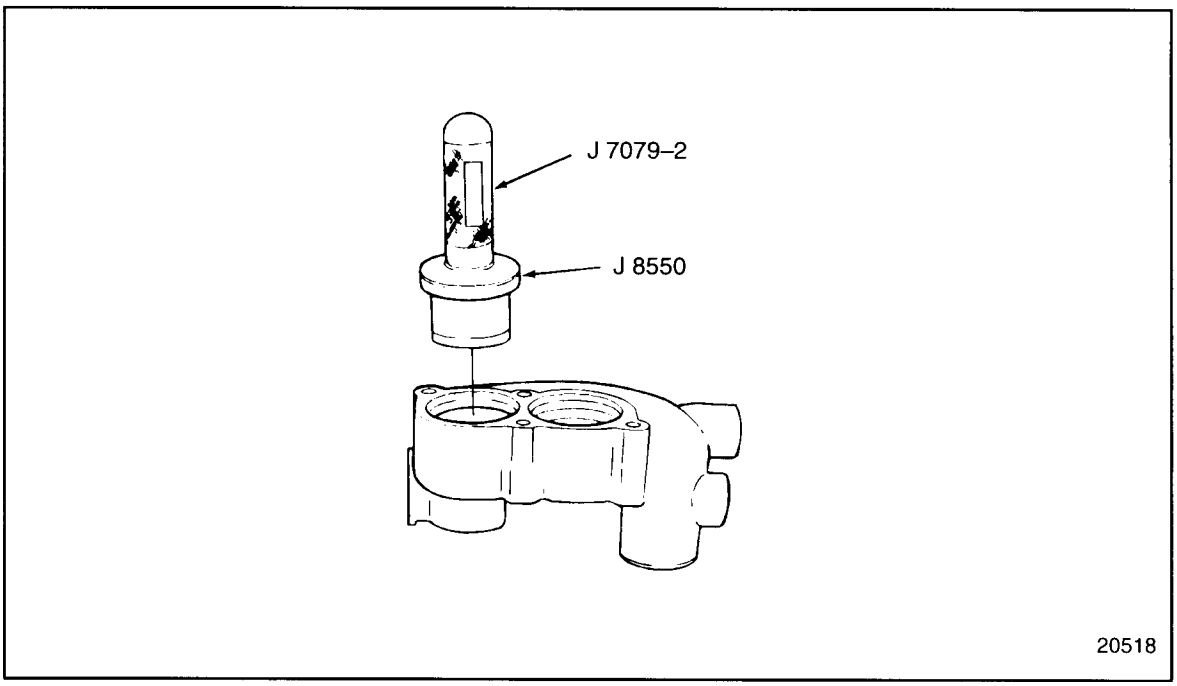

Figure 4-75 Thermostat Housing Seal Insertion

3. Insert the seal driver with seal installed, into the thermostat housing.

 Copyright © 2004 DETROIT DIESEL CORPORATION

4. Drive the seal into the bore with a hammer, until the installation tool bottoms on the housing. Rotate the tool during installation to ensure the seal is installed straight. Remove tools J 7079-2 and J 8550. See Figure 4-76.

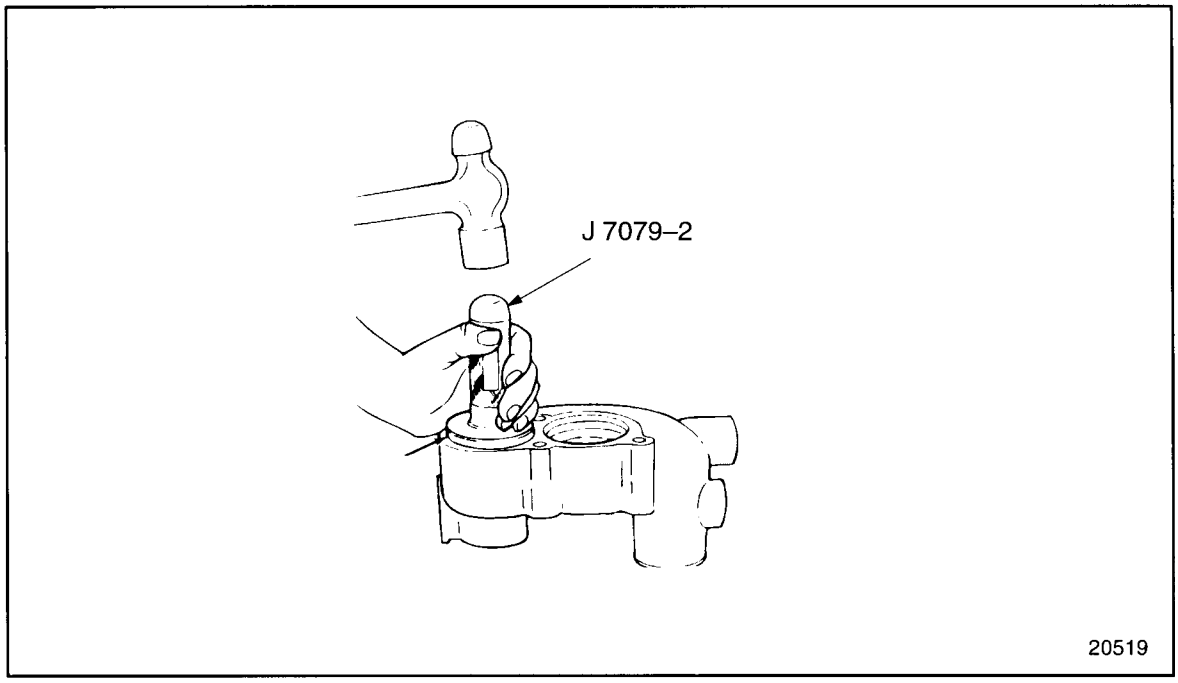

Figure 4-76 Thermostat Housing Seal Installation

5. Repeat step 1 through step 4 for the other seal.
6. Coat the lip of the seals with clean engine oil.
7. Place the thermostats, spring up, into the thermostat housing.

(Rev. 2004) *All information subject to change without notice.*
6SE483 0401 Copyright © 2004 DETROIT DIESEL CORPORATION

8. Press down on the thermostats to seat them. See Figure 4-77.

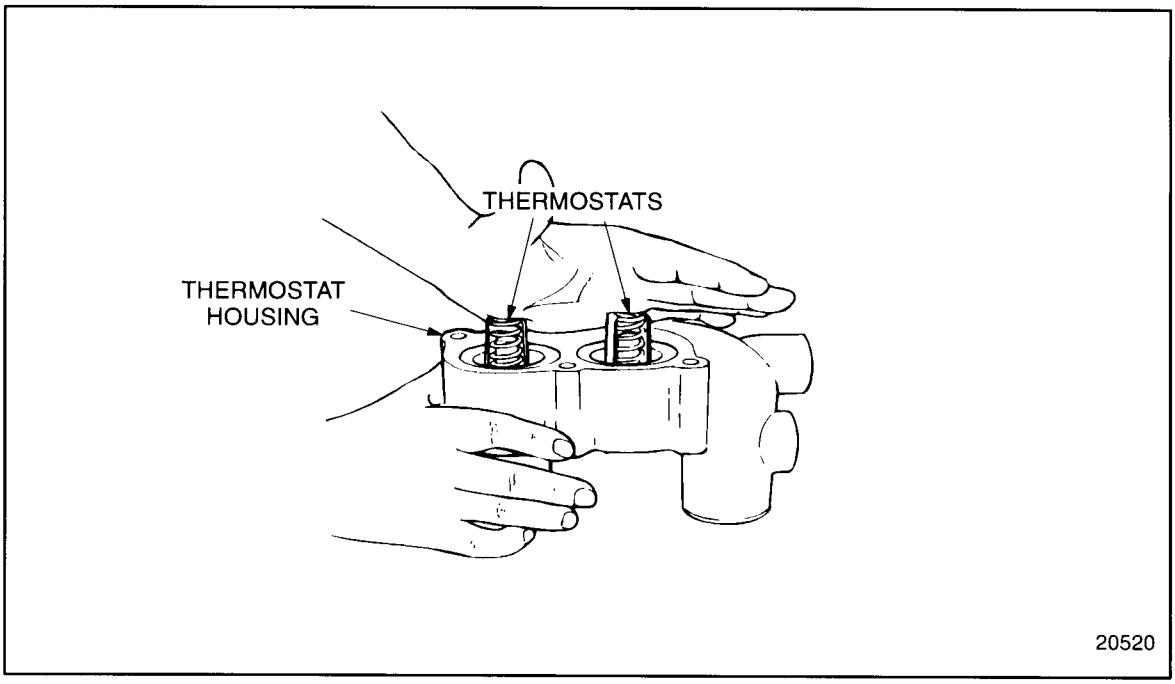

Figure 4-77 Seating Thermostats

9. Ensure the machined surface of the thermostat housing, where it contacts the cylinder head, is clean and dry.
10. Install the thermostat housing to the cylinder head with the four attaching bolts. Torque the bolts to 58-73 N·m (43-54 lb·ft).
11. Install the coolant hoses to the thermostat housing. Tighten the hose clamps.
12. Apply a coating of Loctite® Pipe Sealer with Teflon, PT-7260, or equivalent to the threads of the drain cock if it was removed from the bottom of the thermostat housing.
13. Install and tighten the drain cock.
14. Install any other components removed for this operation.
15. Close the drain cocks in the water pump housing and at the right rear of the cylinder block.
16. Install the thermostat housing vent line and any other lines that were removed from the housing.
17. Fill the cooling system. Refer to section 13.13.4.
18. Refer to section 11.3.5 for verification of thermostat installation. Listed in Table 11-2are the normal cooling system operational parameters.

 Copyright © 2004 DETROIT DIESEL CORPORATION

4.6 COOLANT PRESSURE CONTROL CAP

The radiator or heat exchanger (or expansion tank) has a pressure control cap with a normally closed valve. The cap is designed to permit a pressure in the cooling system equal to the rating stamped on the top of the cap. A cap with a 9 on the top allows the cooling system to develop 62 kPa (9 lb/in.^{2}) before the valve opens. See Figure 4-78. This system pressure raises the boiling point of the coolant and reduces coolant loss. The maximum allowable coolant temperature, regardless of the pressure cap used, is 99°C (210°F).

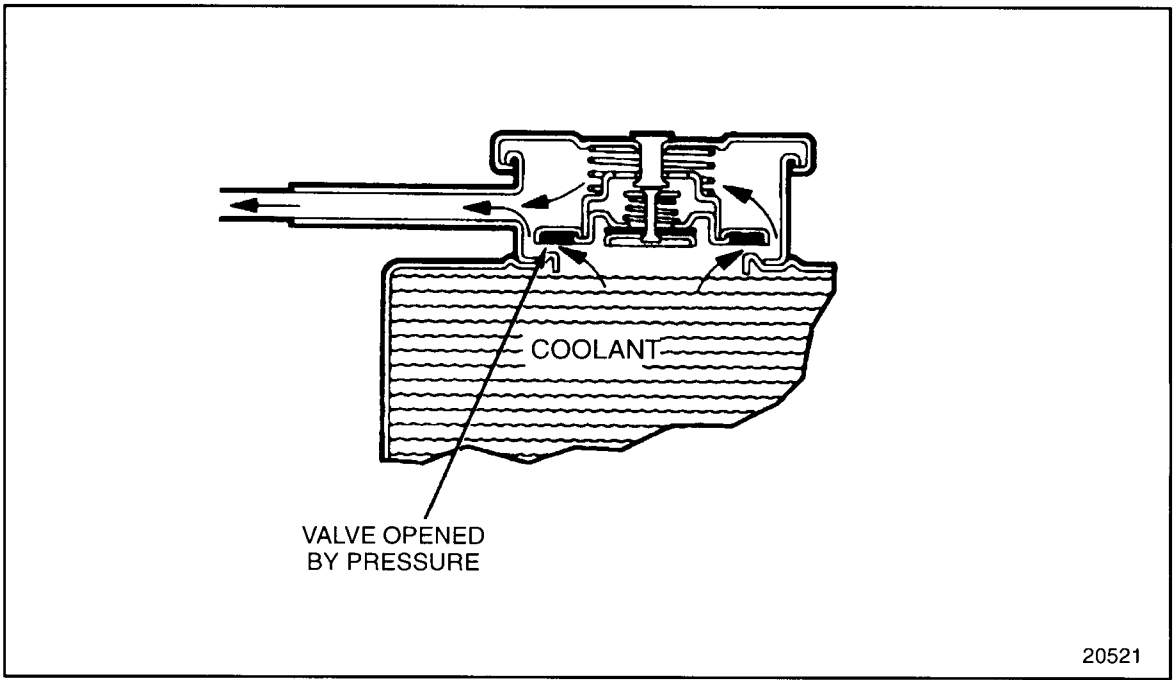

Figure 4-78 Pressure Control Cap (Pressure Valve Open)

(Rev. 2004) *All information subject to change without notice.*
6SE483 0401 Copyright © 2004 DETROIT DIESEL CORPORATION

To prevent collapse of hoses and other parts which are not internally supported, a second valve in the cap opens under vacuum when the system cools. See Figure 4-79. It also permits coolant to flow from coolant recovery bottle (when used) to the radiator tank.

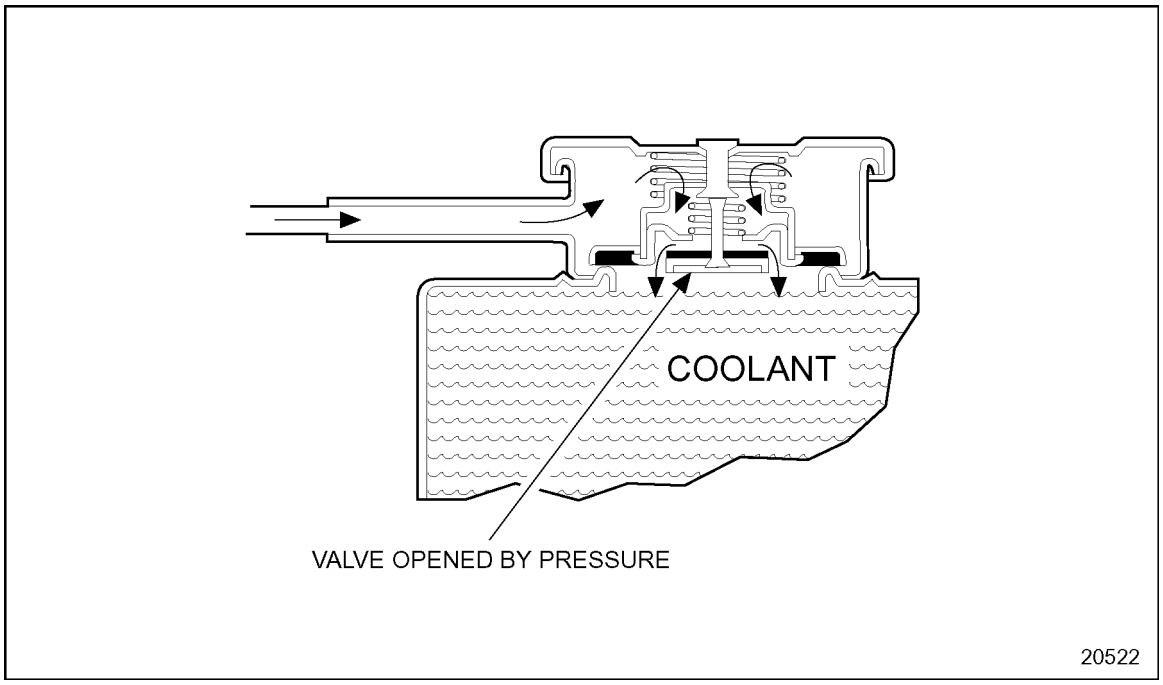

Figure 4-79 Pressure Control Cap (Vacuum Valve Open)

 Copyright © 2004 DETROIT DIESEL CORPORATION

4.6.1 Repair or Replacement of Pressure Control Cap

Refer to the OEM guideline for pressure control cap service procedure.

4.6.2 Removal and Cleaning of Pressure Control Cap

Remove the pressure control cap as follows:

CAUTION:

To avoid injury from the expulsion of hot coolant, never remove the cooling system pressure cap while the engine is at operating temperature. Remove the cap slowly to relieve pressure. Wear adequate protective clothing (face shield or safety goggles, rubber gloves, apron, and boots).

1. Wipe the outside area on the pressure control cap clean before removal.
2. Push down on pressure control cap while turning counterclockwise.

(Rev. 2004) *All information subject to change without notice.*
6SE483 0401 Copyright © 2004 DETROIT DIESEL CORPORATION

4.6.2.1 Inspection of Pressure Control Cap

Detroit Diesel does not offer pressure control (radiator) caps as original equipment on Series 60 engines, except on marine engines.

CAUTION:

To avoid injury from the expulsion of hot coolant, never remove the cooling system pressure cap while the engine is at operating temperature. Remove the cap slowly to relieve pressure. Wear adequate protective clothing (face shield or safety goggles, rubber gloves, apron, and boots).

Clean and inspect cap periodically. Check operation of both valves using test kit J 24460-01 or equivalent. Replace if necessary. Inspect and clean filler neck. Replace if damaged.

It is recommended that all Series 60 on-highway vehicle and keel-cooled marine engines use a minimum 62 kPa (9 lb/in.^{2}) pressure control cap. If the pressure valve does not open between 55 kPa (8 lb/in.^{2}) and 69 kPa (10 lb/in.^{2}) or the vacuum valve does not open at 4.3 kPa (.625 lb/in.^{2}) (differential pressure), replace the pressure control cap.

Series 60 heat exchanger-cooled marine engines require a 48 kPa (7 lb/in.^{2}) pressure control cap. If the pressure valve does not open between 41 kPa (6 lb/in.^{2}) and 55 kPa (8 lb/in.^{2}), replace the pressure control cap.

4.6.3 Installation of Pressure Control Cap

Refer to vehicle or equipment manufacturer instructions for installation procedures.

Refer to section 11.3.5 for verification of proper pressure control cap installation.

 Copyright © 2004 DETROIT DIESEL CORPORATION

4.7 ENGINE COOLING FAN

The engine cooling fan can be mounted at the front of the engine and is belt driven from the crankshaft pulley. See Figure 4-80.

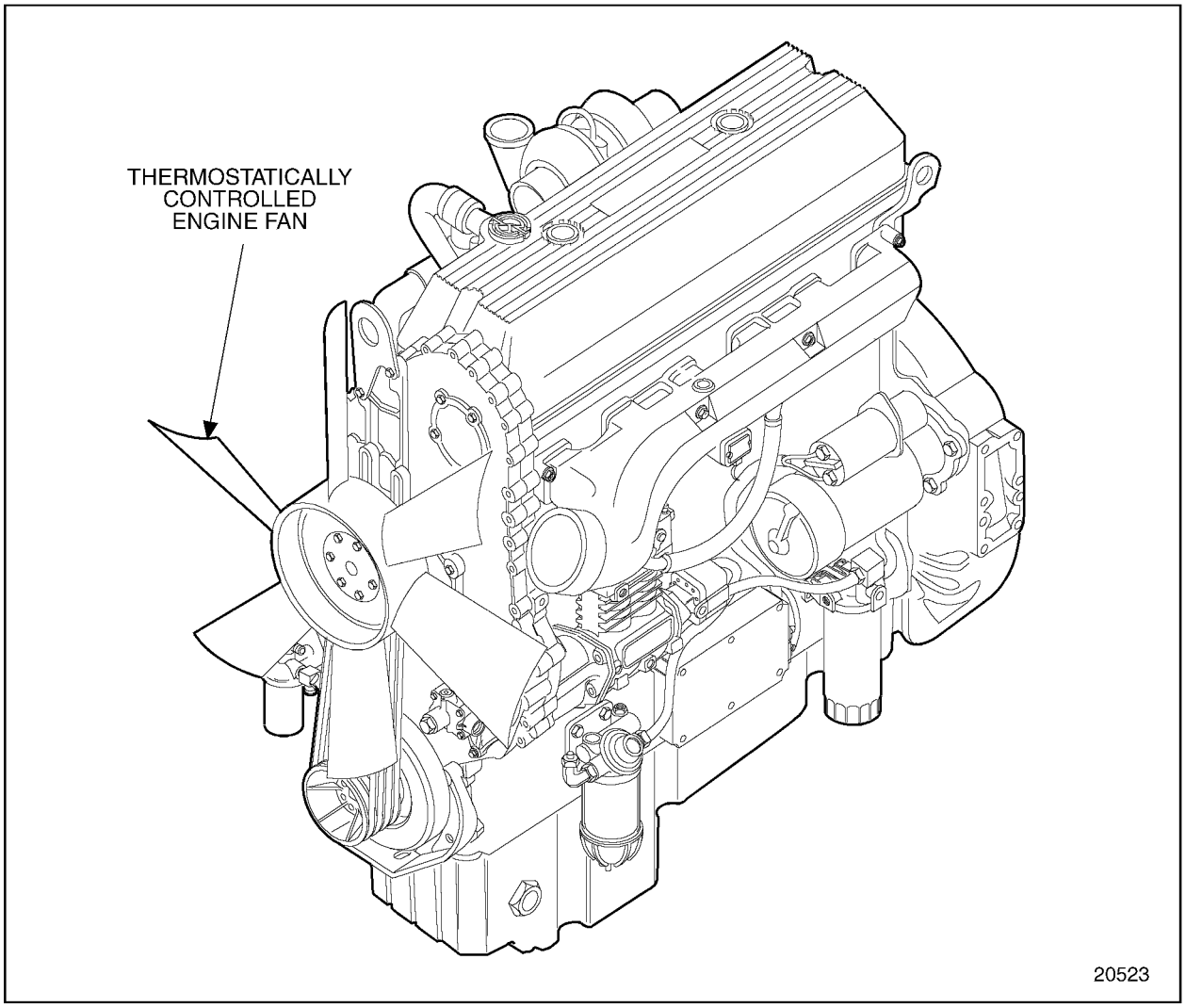

Figure 4-80 Engine Cooling Fan Location

On most applications, the fan is thermostatically controlled. This fan assembly is designed to regulate the fan speed and maintain an efficient engine coolant temperature regardless of the variations in the engine load or outside air temperature. No adjustment of the thermostatic control is necessary.

(Rev. 2004) *All information subject to change without notice.*
6SE483 0401 Copyright © 2004 DETROIT DIESEL CORPORATION

The three-groove pulley hub uses a matched set of three drive belts. On some units equipped with an air conditioning compressor, an additional pulley and retaining plate are attached to the three-groove pulley. See Figure 4-81.

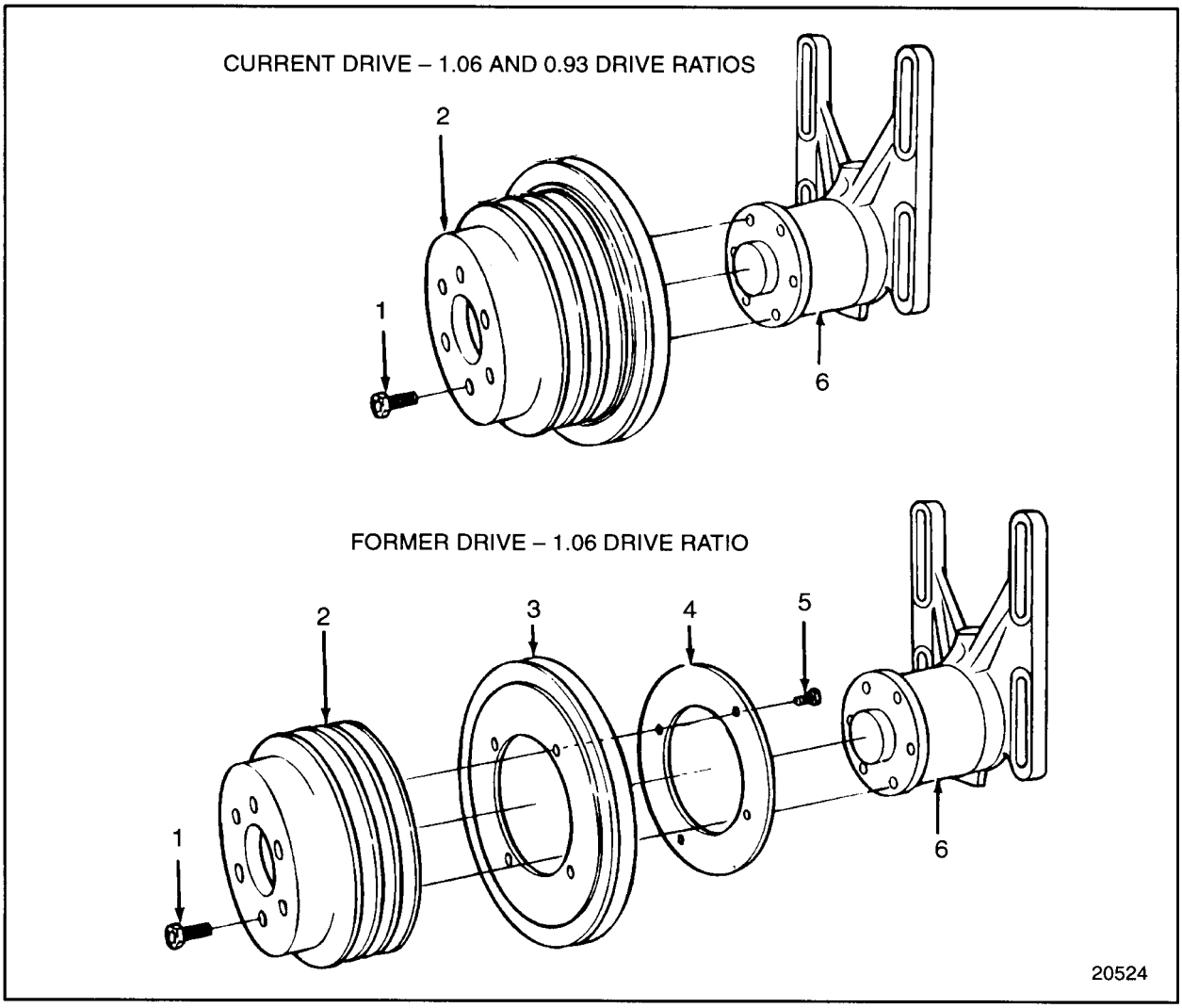

1. Bolt, Fan Retaining (6)
2. Fan Pulley
3. Drive Pulley, Air Conditioning Compressor
4. Retaining Plate
5. Bolt, Air Conditioning Retaining
6. Fan Hub Assembly

Figure 4-81 Air Conditioning Compressor Drive Pulley and Related Parts

Whenever it is necessary to replace one of the crankshaft pulley-to-fan hub drive belts, all three belts must be replaced as a matched set. Refer to section 13.13.10 for belt adjustment or replacement information.

 Copyright © 2004 DETROIT DIESEL CORPORATION

The fan hub is supported by a front roller bearing and a rear ball bearing. Internal snap rings are used to retain the bearings in the housing and on the shaft. A single lip grease seal is mounted in the fan hub housing. A hub cap seals the bearing cavity at the rear of the housing. See Figure 4-82.

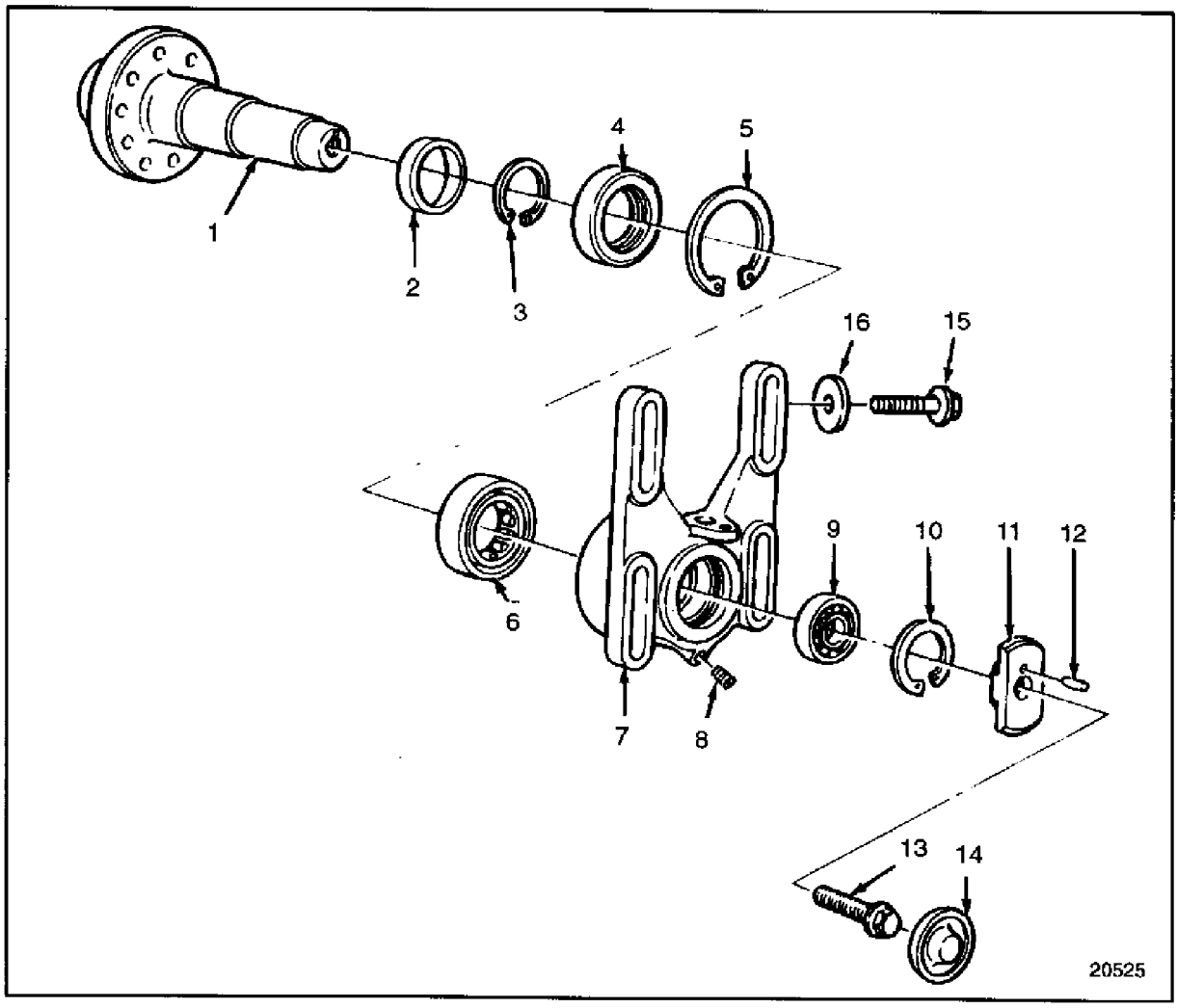

1. Drive Shaft, Fan
2. Race, Front Bearing Inner
3. Snap Ring, Inner Race Retaining
4. Grease Seal
5. Snap Ring, Front Bearing Retaining
6. Bearing, Front Roller
7. Housing, Fan Hub
8. Pipe Plug
9. Ball Bearing, Rear
10. Snap Ring, Rear Bearing Retaining
11. Spacer
12. Pin
13. Bolt, Spacer-to-drive
14. Hub Cap
15. Bolt, Fan Hub Mounting (4)
16. Hardened Washer (4)

Figure 4-82 Fan Hub and Related Parts

(Rev. 2004) *All information subject to change without notice.*
6SE483 0401 Copyright © 2004 DETROIT DIESEL CORPORATION

The fan hub utilizes four elongated mounting holes and a single threaded rod for adjustment. The fan hub is mounted to the fan support bracket with four bolts. See Figure 4-83.

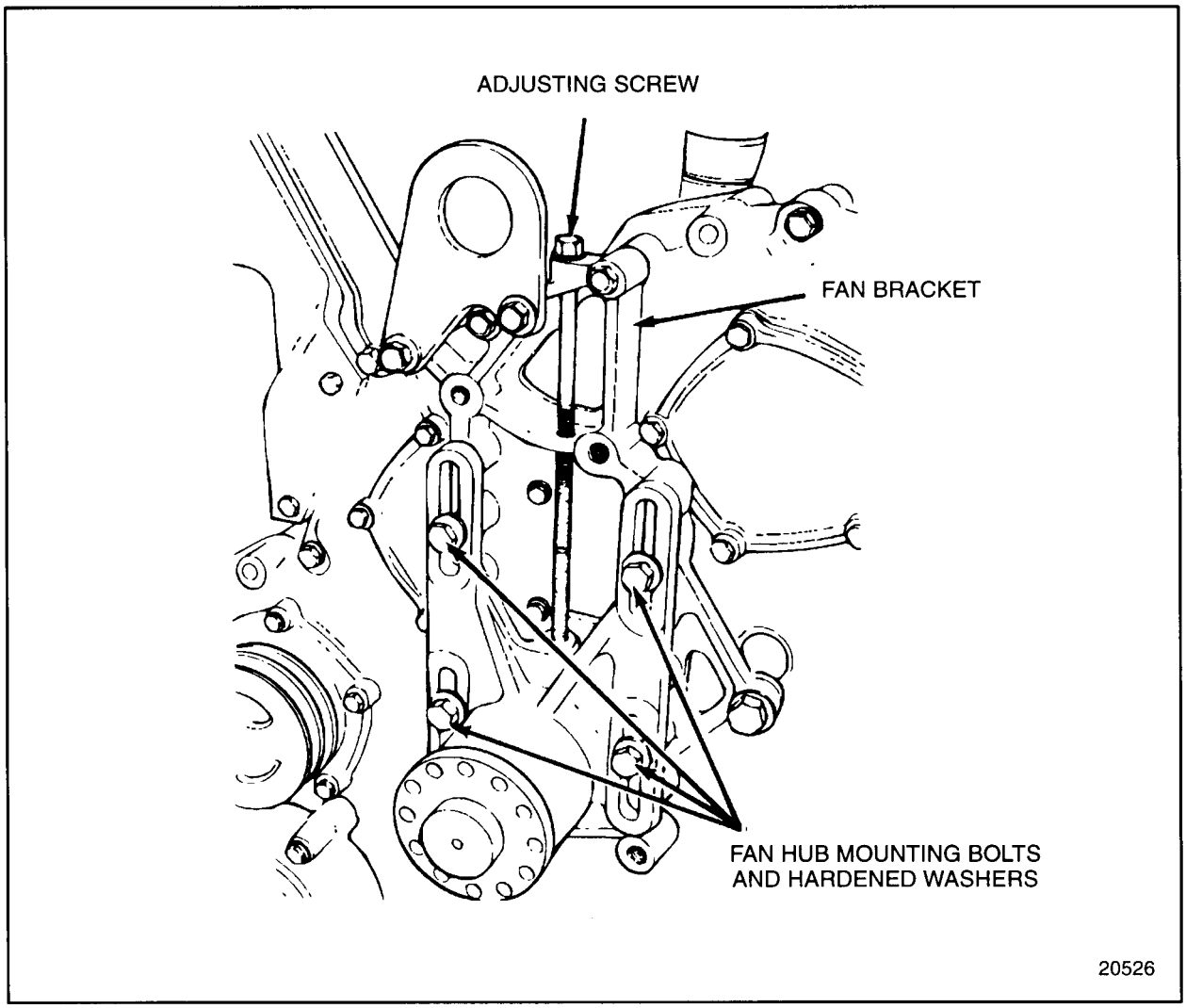

Figure 4-83 Fan Hub Mounting

The bearings and the cavity between the bearings are packed with grease at the time the fan hub is assembled. Refer to section 13.5 for the maintenance schedule.

 Copyright © 2004 DETROIT DIESEL CORPORATION

4.7.1 Repair and Replacement of Engine Cooling Fan

To determine if repair is possible or replacement of the engine cooling fan is necessary preform the following procedure. See Figure 4-84.

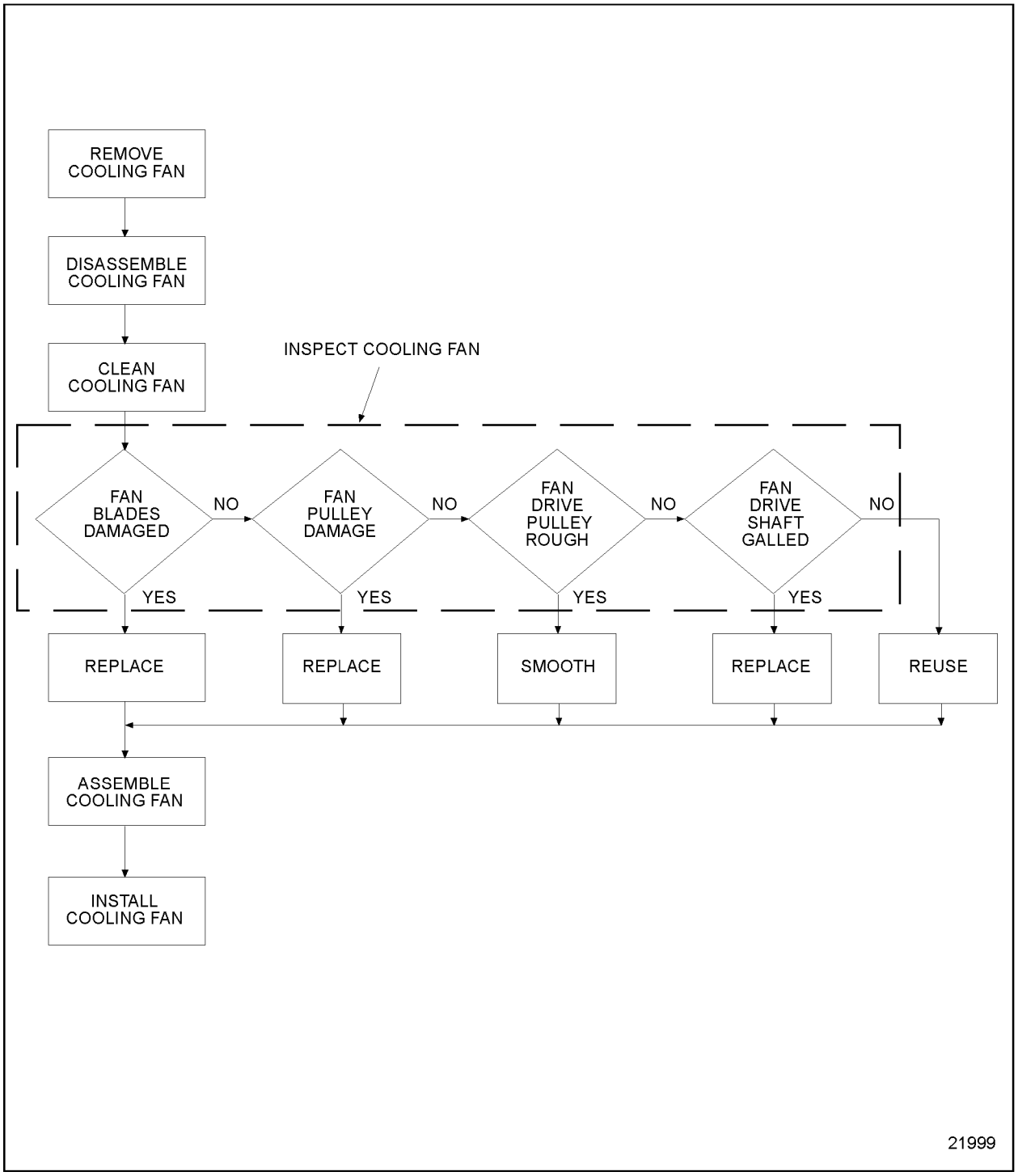

Figure 4-84 Flowchart for Repair or Replacement of Engine Cooling Fan

(Rev. 2004) *All information subject to change without notice.*
6SE483 0401 Copyright © 2004 DETROIT DIESEL CORPORATION

4.7.2 Removal of Engine Cooling Fan

Remove the engine cooling fan as follows:

NOTICE:
Before removing the fan, check the blades for alignment or damage. Do not rotate the fan by pulling on the fan blades. Engine damage and radiator damage could result.

The fan blades must rotate in a vertical plane parallel with and a sufficient distance from the radiator core. Cracked, deformed or otherwise damaged fan blades may reduce the efficiency of the cooling system, throw the fan out of balance, or damage the radiator cores.

1. If equipped with air conditioning, loosen the air conditioning compressor mounting bolts. Remove the compressor drive belt.
2. Loosen the four fan hub-mounting bolts. See Figure 4-83.
3. Turn the adjusting rod counterclockwise enough to allow slack in the drive belts.
4. Remove the fan attaching bolts and remove the fan, fan drive belts and fan pulley.
5. Remove the adjusting rod from the housing by unscrewing it.
6. Remove the four fan hub-mounting bolts. Remove the fan hub assembly.

4.7.3 Disassembly of Engine Cooling Fan

Disassemble the engine cooling fan as follows:

1. Remove the hub cap at the rear of the housing by piercing the cap with a punch and prying the cap out of the housing.

NOTICE:
If a vise is used to secure the fan hub, use wood or leather between hub and vise. Exercise extreme caution to prevent damage to the fan hub.

2. Secure the fan hub in a vise. Loosen and remove the bolt, securing the spacer to the shaft.
3. Remove the spacer.
4. Place the housing, fan mounting surface down, on a press bed on wood blocks high enough to allow the shaft to be removed. Press the shaft to remove it from the housing.

 Copyright © 2004 DETROIT DIESEL CORPORATION

CAUTION:

To avoid injury from flying parts when working with components under spring tension, wear adequate eye protection (face shield or safety goggles).

5. Remove the roller bearing inner race snap ring from the shaft using snap ring pliers.
6. Remove the roller bearing inner race using a two-jaw puller.

NOTE:
Any time the shaft is removed from the housing, the ball bearing assembly (rear bearing) must be replaced. Any time the roller bearing inner race is removed from the shaft or the roller bearing assembly is removed from the housing, the roller bearing assembly must be replaced.

7. Remove the grease seal from the housing and discard the seal.
8. Remove the bearings from the housing as follows:
   [a] Remove the rear ball bearing snap ring using snap ring pliers.
   [b] Support the housing, fan side up, on two wood blocks spaced far enough apart to permit removal of the rear bearing from the housing.
   [c] Remove the bearing from the housing by tapping alternately around the rear face of the bearing outer race with a small brass rod and hammer.
   [d] Reverse the housing on the wood blocks. Remove the front bearing snap ring using snap ring pliers.
   [e] Remove the front bearing from the hub in the same manner as the rear bearing. Refer to step 8[a] through step 8[d].

4.7.3.1 Inspection of Engine Cooling Fan

Inspect the engine cooling fan as follows:

1. Visually examine the fan blades for cracks or other damage.
   [a] If the blades are cracked or deformed, replace the fan.
   [b] If the fan blades are not cracked or deformed, reuse parts.
2. Visually inspect fan pulley for wear or damage to grooves.
   [a] If fan pulley grooves are damaged or severely worn, replace the pulley.
   [b] If fan pulley grooves are not damaged or severely worn, reuse the pulley.
3. Inspect fan pulley for rust or rough spots.
4. Remove any rust or rough spots in the grooves of the fan pulley.
5. Visually inspect the fan drive shaft for galling, pitting, scoring or cracks.

(Rev. 2004) *All information subject to change without notice.*
6SE483 0401 Copyright © 2004 DETROIT DIESEL CORPORATION

[a] If galling, pitting, scoring or cracks are found, replace parts as necessary.

[b] If no galling, pitting, scoring or cracks are not found, reuse parts.

4.7.4 Cleaning of Engine Cooling Fan

Clean the engine cooling fan as follows:

1. Clean the fan, fan hub, and related parts with clean fuel oil.

CAUTION:

To avoid injury from flying debris when using compressed air, wear adequate eye protection (face shield or safety goggles) and do not exceed 40 psi (276 kPa) air pressure.

2. Dry the fan, fan hub, and related parts with compressed air.

4.7.5 Assembly of Engine Cooling Fan

Assemble the engine cooling fan as follows:

1. Install the roller bearing inner race to the fan hub shaft. Support the shaft (fan side down) on a press bed. Use tool, J 36310-A, part of tool set J 36310-A, to press the race on the shaft firmly against the shoulder.

NOTE:
The identification number side of the race should be against the tool.

CAUTION:

To avoid injury from flying parts when working with components under spring tension, wear adequate eye protection (face shield or safety goggles).

2. Using snap ring pliers, install the inner race retaining snap ring on the shaft.

NOTE:
Be sure the snap ring is fully seated in the groove.

3. Using Mobilgrease® HP or equivalent lithium base multipurpose grease, pack the roller bearing.
4. With the fan drive housing on a press bed (fan side up) install the roller bearing into the housing. Using J 36310-2, part of tool set J 36310-A, press the bearing firmly against the shoulder in the housing.

 Copyright © 2004 DETROIT DIESEL CORPORATION

5. Install the roller bearing retaining snap ring.

NOTE:
Be sure the snap ring is fully seated in the groove in the housing.

NOTICE:
Care must be taken to only apply enough pressure to seat the seal against the snap ring. Excess pressure will deform the seal case.

6. Using the opposite (smooth) side of tool J 36310-2, part of tool set J 36310-A, press the oil seal into the housing against the snap ring.
7. Using Mobilgrease®or equivalent lithium-base multipurpose grease, pack the ball bearing.
8. Using the wider end of toolJ 36310-1, part of tool set J 36310-A, to press on the outer race of the bearing; turn the fan hub housing over (fan side down) on the press bed and install the ball bearing assembly into the housing.
9. Press the bearing firmly against the shoulder in the housing.
10. Install the ball bearing retaining snap ring in the housing.

NOTE:
Be sure the snap ring is fully seated in the groove.

11. Pack the housing with Mobilgrease® HP or equivalent lithium base multipurpose grease. Do not overfill the housing.
    Mobilgrease® is a registered trademark of Mobil Oil Corporation.

NOTE:
The housing should be between 1/2 to 2/3 full.

12. Coat the lip of the new oil seal with clean engine oil.
13. With the fan hub shaft (fan side down) supported on a press bed, carefully install the housing over the shaft.
14. Using the narrow end of toolJ 36310-1, part of tool set J 36310-A, press the inner race of the ball bearing onto the shaft until it is firmly seated against the shoulder on the shaft.
15. Secure the fan hub shaft in a vice with soft (brass) jaws.
16. Index the locating pin in the shaft with its mating hole in the spacer and install the spacer.
17. Install the spacer retaining bolt and torque to 58-73 N·m (43-54 lb·ft).
18. Coat the edge of the hub cap with a sealant such as Loctite® 620 or equivalent.
19. Install the cap into the end of the housing.

(Rev. 2004) *All information subject to change without notice.*
6SE483 0401 Copyright © 2004 DETROIT DIESEL CORPORATION

20. Using the flat side of tool J 36310-2, part of tool set J 36310-A, press the cap into the housing.

NOTE:
The raised center section of the cap should be flush with the surface of the housing.

4.7.6 Installation of the Engine Cooling Fan

Install the engine cooling fan as follows:

1. Install the fan hub assembly to the support bracket using the four bolts and hardened washers. Do not tighten the bolts.
2. Install the adjusting rod in the housing.
3. If removed, install the air conditioning compressor drive pulley and retaining plate to the fan drive pulley. Torque the retaining bolts to 30-38 N·m (22-28 lb·ft).
4. Install the fan drive pulley on the fan hub assembly.
5. Install the fan to the fan drive pulley. Align the holes in the fan, drive pulley and drive shaft.
6. Install the attaching bolts through the fan and pulley and thread them into the tapped holes in the fan hub. Torque the bolts in a crisscross pattern to 47-53 N·m (35-39 lb·ft).
7. Install the drive belts to the fan pulley and crankshaft pulley.
8. Adjust the drive belts to provide the proper tension. Refer to section 13.13.10.
9. Torque the fan hub-mounting bolts to 101-126 N·m (75-93 lb·ft).

 Copyright © 2004 DETROIT DIESEL CORPORATION

4.8 COOLANT FILTER AND CONDITIONER

The engine cooling system filter and conditioner is a compact bypass type unit with a replaceable spin-on type element. See Figure 4-85. The factory-installed coolant filter is mounted on the gear case cover.

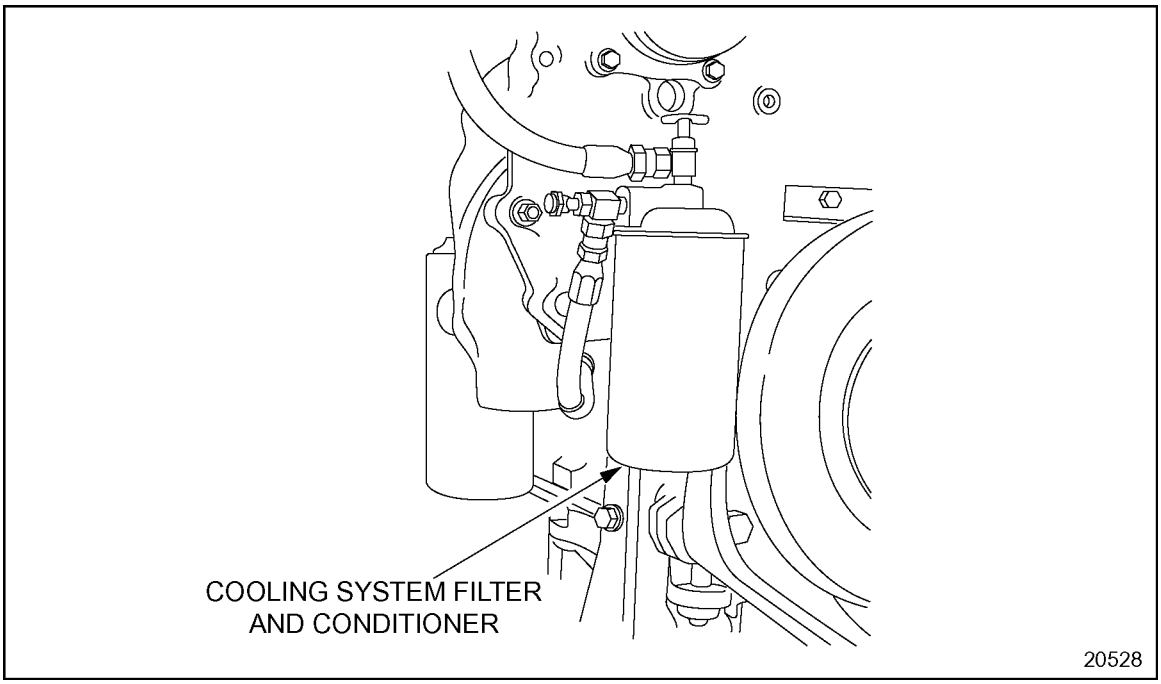

Figure 4-85 Coolant Filter

A correctly installed and properly maintained coolant filter and conditioner provides a cleaner engine cooling system, greater heat dissipation, increased engine efficiency through improved heat conductivity and contributes to longer life of engine parts.

The filter provides mechanical filtration by means of a closely packed element through which the coolant passes. Any impurities such as sand and rust particles suspended in the cooling system will be removed by the straining action of the element. The removal of these impurities will contribute to longer water pump life and proper operation of the thermostat.

The filter also serves to condition the coolant by softening the water to minimize scale deposits, maintain an acid-free condition and act as a rust preventive.

Corrosion inhibitors are placed in the element and dissolve into the coolant, forming a protective rustproof film on all of the metal surfaces of the cooling system. Refer to section 5.4.3.

(Rev. 2004) *All information subject to change without notice.*
6SE483 0401 Copyright © 2004 DETROIT DIESEL CORPORATION

4.8.1 Repair or Replacement of Coolant Filter and Conditioner

Replace filters at regularly scheduled maintenance intervals. Refer to section 13.13.16.

4.8.1.1 Inspection of Coolant Filter and Conditioner

Detroit Diesel does not offer coolant filter and conditioners as original equipment on Series 60 engines.

4.8.2 Installation of Coolant Filter and Conditioner

Refer to OEM guidelines for coolant filter and conditioner installation procedure.

 Copyright © 2004 DETROIT DIESEL CORPORATION

4.9 RADIATOR

The radiator is an OEM supplied component. Follow OEM guidelines.

4.9.1 Repair or Replacement of Radiator

If it is determined that your radiator is plugged, use the following procedure to reverse flush the radiator:

1. Remove scale in cooling system by using a descaling solvent. Follow OEM instructions.
2. Neutralize the system with a neutralizing agent. Follow OEM instructions.
3. Drain the cooling system. Refer to section 13.13.4.
4. Remove the radiator inlet and outlet hoses.
5. Remove the water pump inlet and outlet hoses.
6. Attach a hose to the top of the radiator to lead water away from the engine.
7. Attach a hose at the bottom of the radiator and insert a flushing gun in the hose.
8. Connect the water hose of the gun to the water outlet and the air hose to the compressed air outlet.

NOTICE:
Apply air gradually. Do not exert more than 138 kPa (20 lb/in.^{2}) air pressure. Too great a pressure may rupture a radiator tube.

9. Turn on the water and when the radiator is full, turn on the air in short blasts, allowing the radiator to fill between blasts.
10. Continue flushing until only clean water is expelled from the radiator.
11. Remove flushing gun and hoses from radiator.
12. Attach the water pump inlet and outlet hoses.
13. Attach the radiator inlet and outlet hoses.
14. Fill cooling system. Refer to section 13.13.4.
15. Refer to section 11.3.5 for verification of installation.

(Rev. 2004) *All information subject to change without notice.*
6SE483 0401 Copyright © 2004 DETROIT DIESEL CORPORATION

4.10 KEEL COOLING SYSTEM (COMMERCIAL MARINE)

In the keel cooling system, the engine coolant is drawn by the engine water pump from the keel cooler mounted on the hull of the vessel and is forced through the engine oil cooler, cylinder block and head to the thermostat housing. Then it flows back to the keel cooler, completing its cooling circuit. A bypass from the thermostat housing to the inlet side of the water pump permits circulation of coolant through the engine when the thermostats are closed. When the thermostats open, the coolant flows into the surge tank and through the coils of the keel cooler to be cooled. See Figure 4-86.

The heat of the engine coolant is transferred through the keel cooler coils to the surrounding sea water.

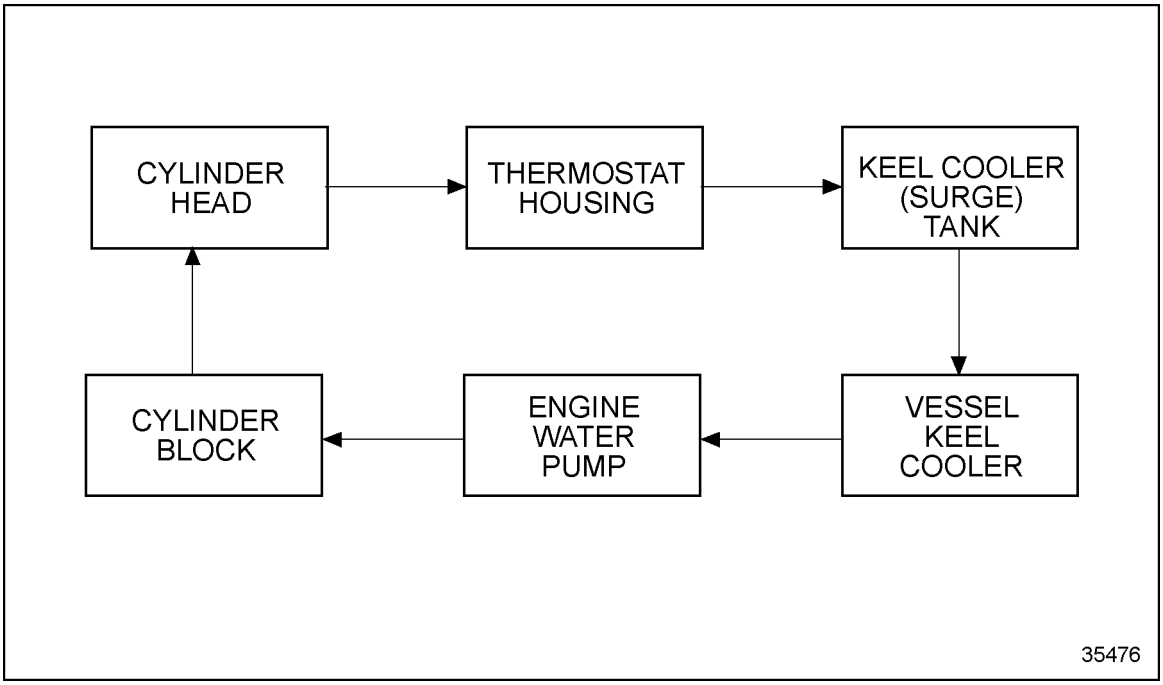

Figure 4-86 Schematic of the Keel Cooling System (Raw Water Cooled)

 Copyright © 2004 DETROIT DIESEL CORPORATION

4.11 HEAT EXCHANGER COOLING SYSTEM (PLEASURE CRAFT MARINE)

In the heat exchanger cooling system, the coolant is drawn by the engine water pump from the heat exchanger and is forced through the engine oil cooler, cylinder block, cylinder heads and exhaust manifolds to the thermostat housings. A bypass from the thermostat housings to the inlet side of the water pump permits circulation of coolant through the engine when the thermostats are closed. See Figure 4-87 and see Figure 4-88.

When the thermostats are open, the coolant flows through the heat exchanger where it is cooled.

An engine driven raw water pump circulates raw water (sea water) through the heat exchanger to lower the temperature of the engine coolant.

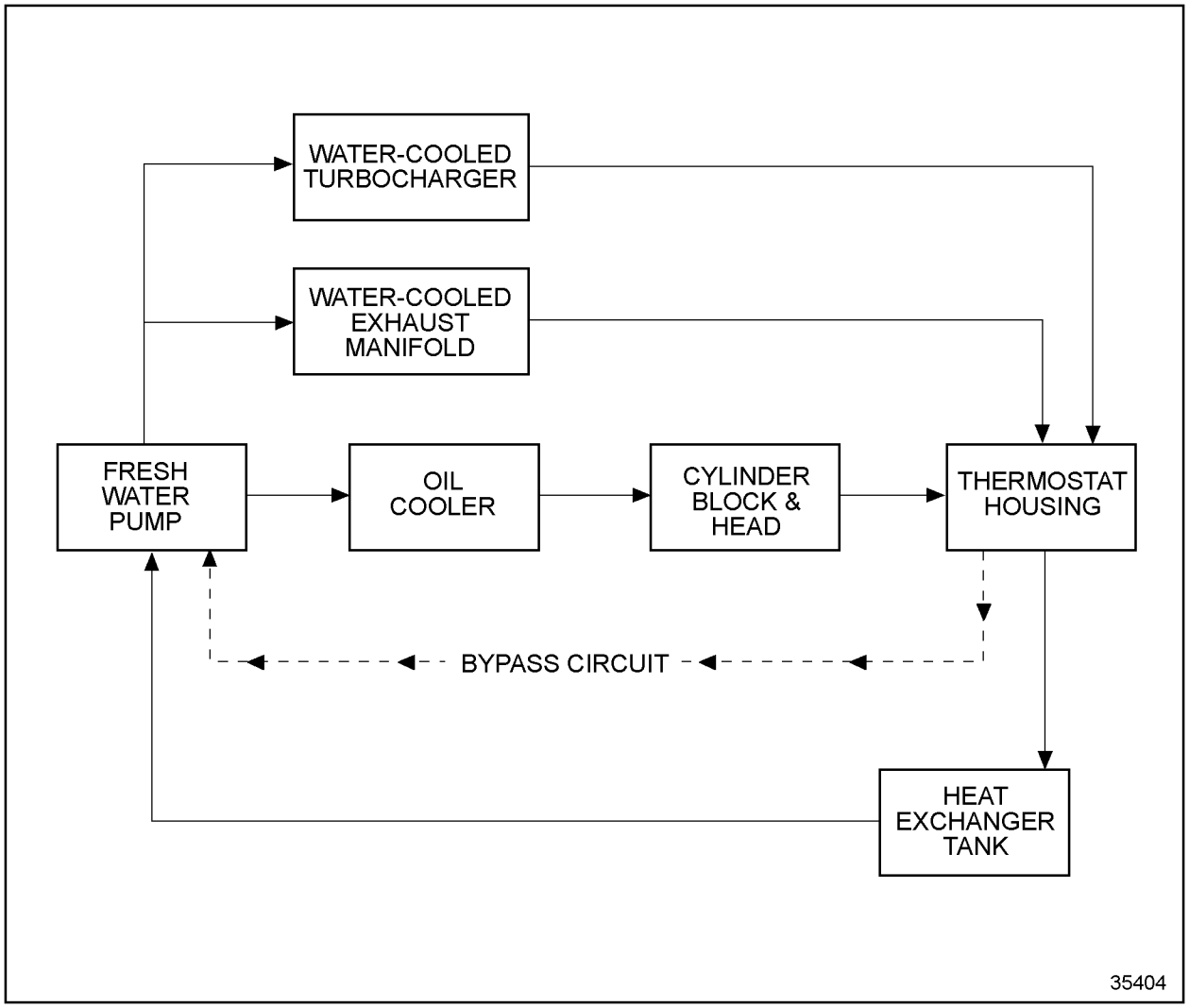

Figure 4-87 Schematic of the Heat Exchanger-Cooled Pleasure Craft Marine Engine

(Rev. 2004) *All information subject to change without notice.*
6SE483 0401 Copyright © 2004 DETROIT DIESEL CORPORATION

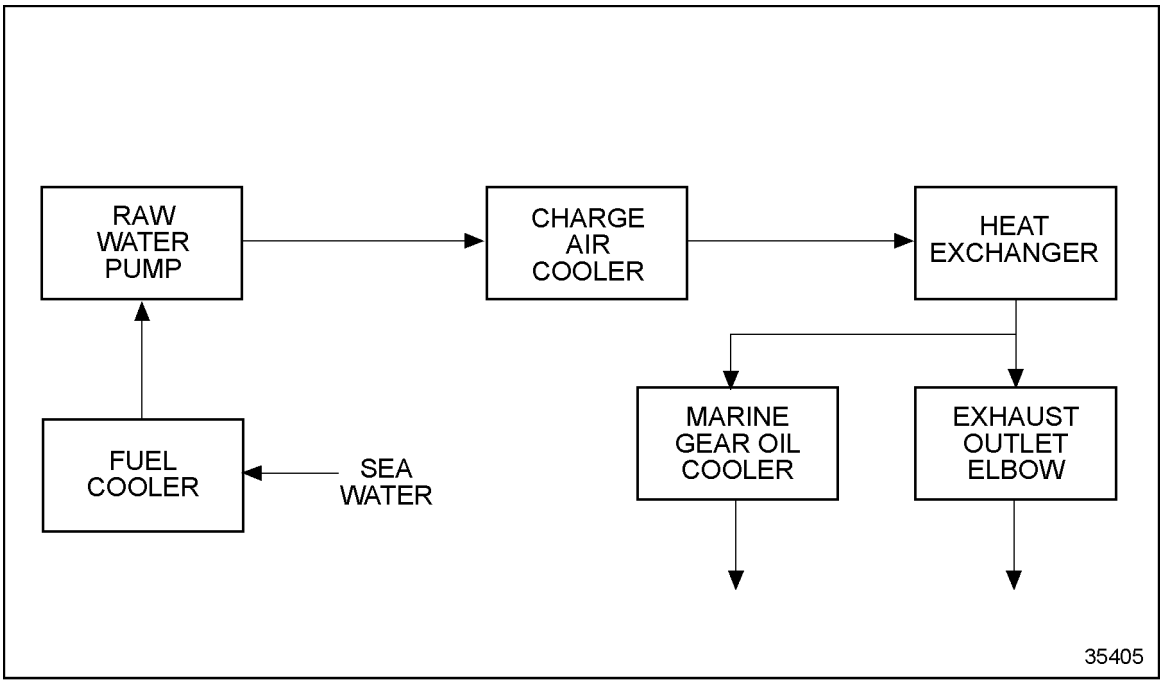

Figure 4-88 Raw Water Flow on Heat Exhanger-Cooled Marine Engine

 Copyright © 2004 DETROIT DIESEL CORPORATION

4.12 HEAT EXCHANGER (PLEASURE CRAFT MARINE)

The heat exchanger used on the Series 60 marine engine is a stacked plate cooler design assembly. In this type of assembly, heat exchanger membranes or plates are stacked side-by-side with special gaskets between the plates. The plates and gaskets are then compressed in a bundle to provide sealing. The sides of the heat exchanger plates are exposed for enhanced heat rejection and to make it easier to detect coolant leaks, which could lead to a low coolant level and engine overheating. The system operates as follows:

Hot engine coolant from the thermostat housing flows into the heat exchanger tank and through the plate stack. See Figure 4-89. As this is taking place, sea water from the raw water pump flows into the charge air cooler and then into the plate stack. See Figure 4-90. Sea water flows through the plate stack on one side of the plates, while engine coolant flows through on the opposite side, reducing the temperature of the engine coolant inside. This lower temperature coolant then flows back to the fresh water pump and is disbursed again throughout the engine.

NOTE:
The heat exchanger tank is mounted onto six isolators to minimize the effects of normal engine vibration. These isolators *must* be replaced whenever the heat exchanger is removed.

(Rev. 2004) *All information subject to change without notice.*
6SE483 0401 Copyright © 2004 DETROIT DIESEL CORPORATION

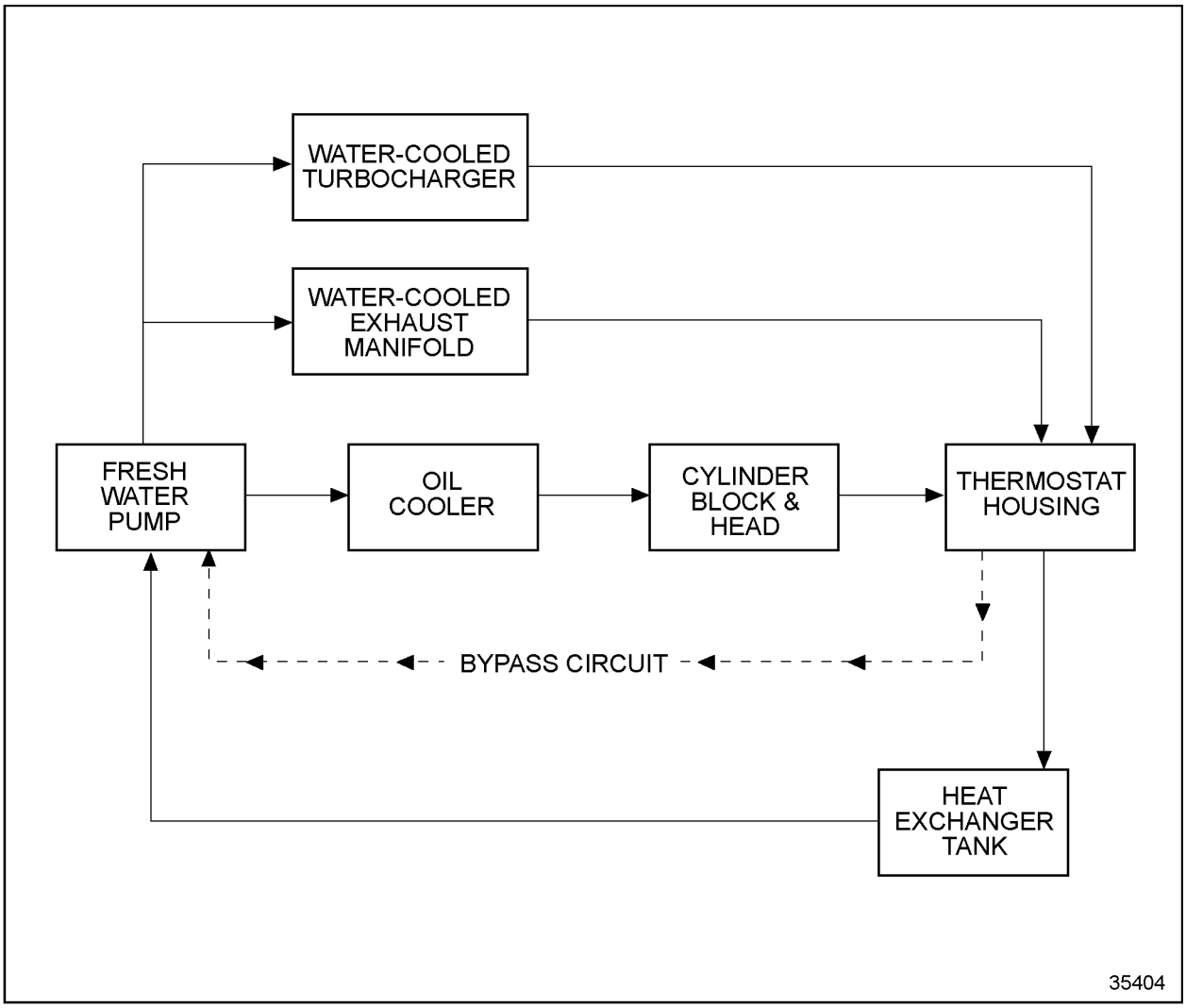

Figure 4-89 **Fresh Water Flow on Heat Exchanger-Cooled Pleasure Craft Marine Engine**

 Copyright © 2004 DETROIT DIESEL CORPORATION

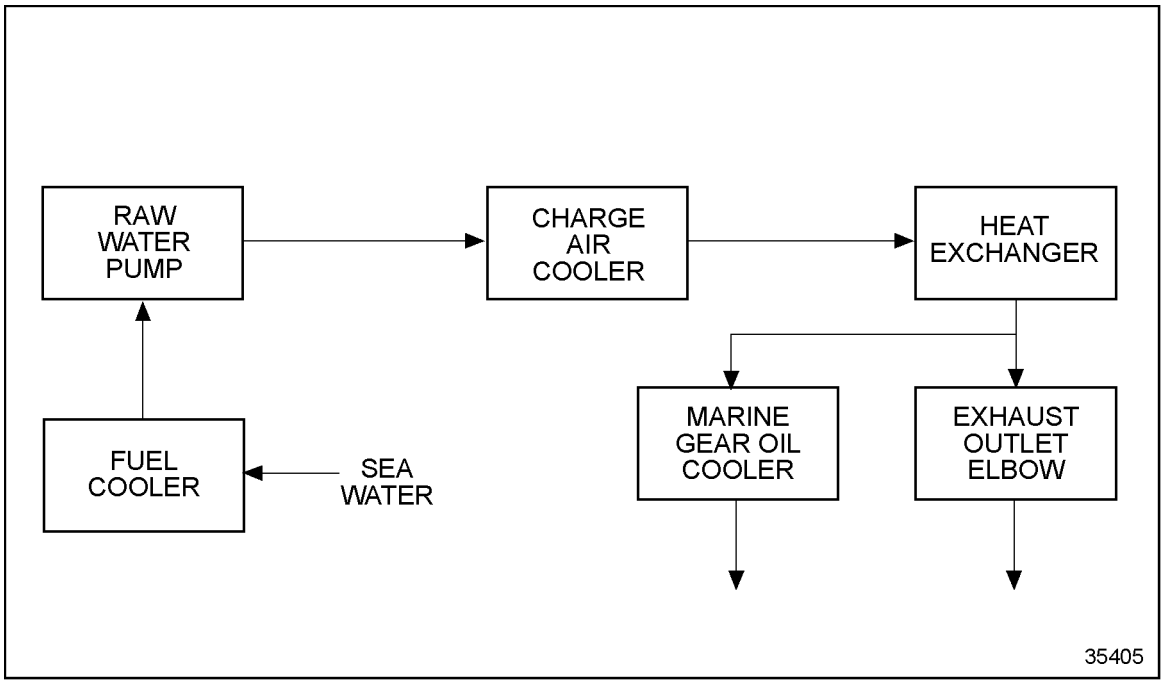

Figure 4-90 Raw Water Flow on Heat Exchanger-Cooled Marine Engine

(Rev. 2004) *All information subject to change without notice.*
6SE483 0401 Copyright © 2004 DETROIT DIESEL CORPORATION

4.12.1 Repair or Replacement of the Heat Exchanger

To determine if repair is possible or replacement of the heat exchanger is necessary, perform the following procedure. See Figure 4-91.

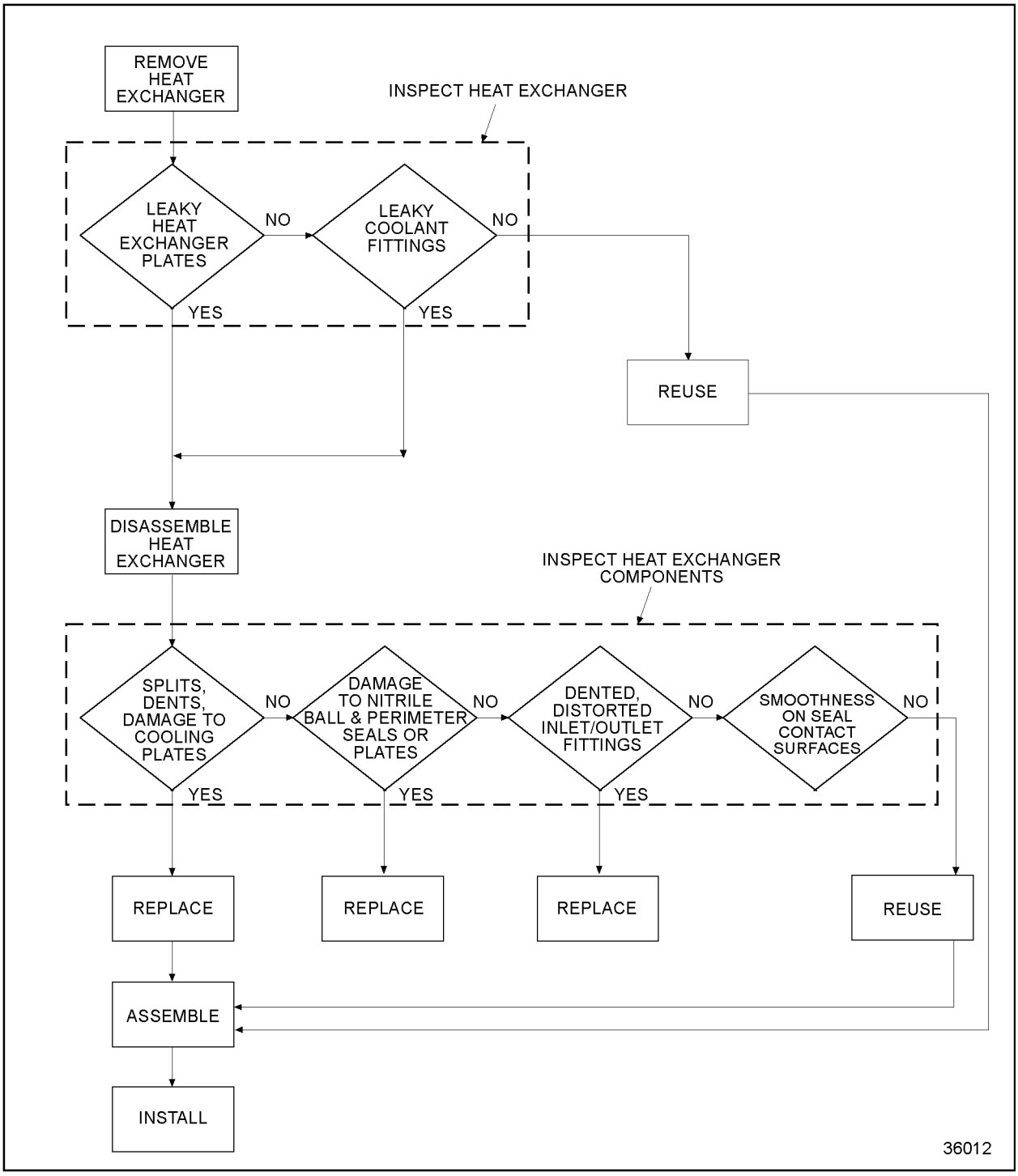

Figure 4-91 Flowchart for Repair or Replacement of Heat Exchanger

 Copyright © 2004 DETROIT DIESEL CORPORATION

4.12.2 Removal of the Heat Exchanger

Remove the heat exchanger from the engine as follows:

CAUTION:

To avoid injury from the expulsion of hot coolant, never remove the cooling system pressure cap while the engine is at operating temperature. Remove the cap slowly to relieve pressure. Wear adequate protective clothing (face shield or safety goggles, rubber gloves, apron, and boots).

1. With the engine at ambient temperature, place a suitable container beneath the heat exchanger. Open the fresh water drain cock and drain the engine coolant from the tank. Close the drain cock.

NOTE:
If the coolant is to be reused, cover the container and place in a protected area away from possible contaminants. If the coolant is not to be reused, dispose of it in an environmentally friendly manner according to state and/or federal (EPA) recommendations.

2. Place a suitable container beneath the heat exchanger. Open the sea water drain cock and drain the raw water from the tank. Close the drain cock and discard the raw water.

NOTICE:

The heat exchanger is fastened to the mounting bracket with six (6) M8 mounting bolts, four on the bottom and two on the back. When removing the heat exchanger, do not remove any of the bolts on the heat exchanger itself. These bolts are used to hold the components of the heat exchanger assembly together. Removing them will result in loosening of the core membrane plates and coolant leakage,which could lead to overheating and severe engine damage.

3. Loosen the hose clamps holding the raw water inlet and outlet tubes to the heat exchanger. Slide the hoses along the tubes and disconnect the tubes from the tank.
4. Loosen the hose clamps holding the engine coolant inlet and outlet tubes to the heat exchanger. Slide the hoses along the tubes and disconnect the tubes from the tank.
5. Remove two (2) mounting bolts holding the heat exchanger to the back isolator brackets.
6. Remove four (4) mounting bolts holding the heat exchanger to the isolators on the bottom bracket.
7. Using a suitable chain hoist and sling, lift the heat exchanger from the engine.

(Rev. 2004) *All information subject to change without notice.*
6SE483 0401 Copyright © 2004 DETROIT DIESEL CORPORATION

4.12.2.1 Inspection of the Heat Exchanger

Inspect the heat exchanger assembly as follows:

1. With the engine at ambient temperature and cool to the touch, inspect ends of the heat exchanger plates for any signs of fresh water coolant or raw water coolant leaks. Leaks can be detected by feeling beneath the core or by visually checking the floor beneath the heat exchanger.
2. Inspect raw water and fresh water coolant fittings on the back of the heat exchanger assembly. If fresh water or raw water is found leaking from the plate bundle, the heat exchanger must be disassembled, the plates and gaskets must be inspected for serviceability, and the heat exchanger must be reassembled with new gaskets or plates, as required.

4.12.3 Disassembly of the Heat Exchanger

Disassemble the heat exchanger assembly as follows:

NOTE:
It is not necessary to remove the heat exchanger assembly from the engine for disassembly and repair.

1. With the engine at ambient temperature, place a suitable container beneath the heat exchanger. Open the fresh water drain cock and drain the engine coolant from the tank. Close the drain cock.

NOTE:
If the coolant is to be reused, cover the container and place in a protected area away from possible contaminants. If the coolant is not to be reused, dispose of it in an environmentally friendly manner according to state and/or federal (EPA) recommendations.

 Copyright © 2004 DETROIT DIESEL CORPORATION

2. Remove the M12 1.75 X 130 mm left-center and right-center bolts (bolt locations 9 and 10 see Figure 4-92) from the front cover plate of the heat exchanger. Install M12 1.75 X 180 mm bolts and spacers in their place. Tighten bolts securely.

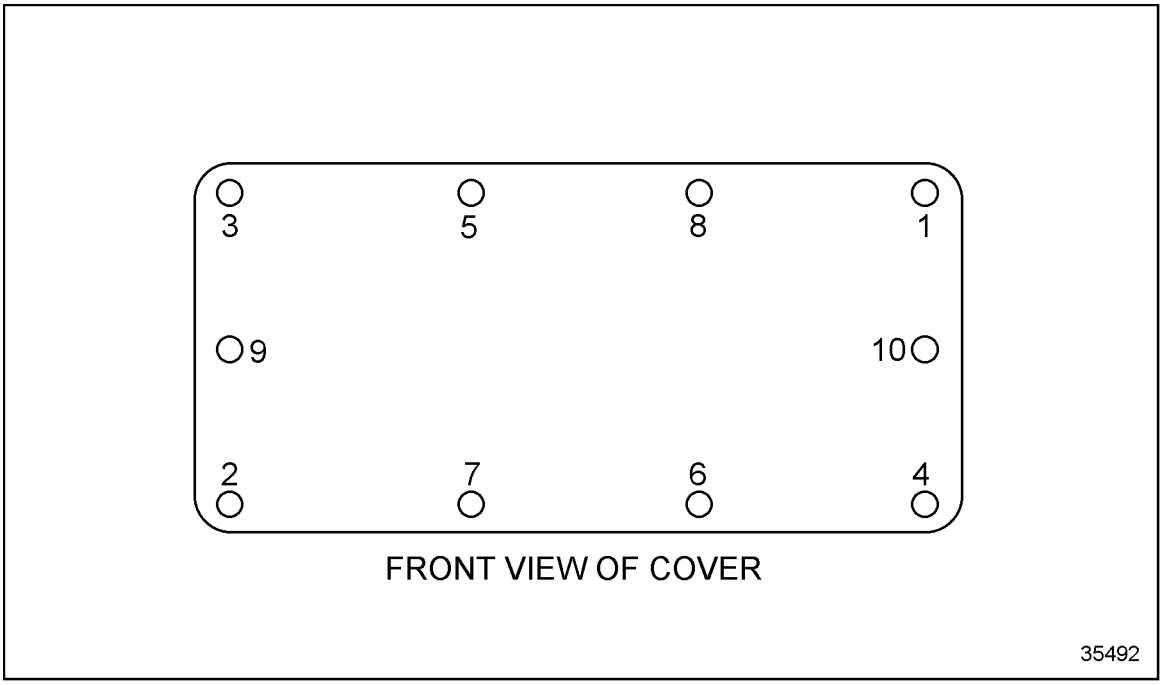

Figure 4-92 Front Cover Plate Bolt Location and Torque Sequence

3. Alternating from top to bottom, gradually loosen and then remove the M12 1.75 X 130 mm top and bottom bolts from the front cover plate. *Do not remove the M12 1.75 X 180 mm left-center and right-center bolts just installed.* As bolts are loosened, the plate bundle will expand forward.

(Rev. 2004) *All information subject to change without notice.*
6SE483 0401 Copyright © 2004 DETROIT DIESEL CORPORATION

4. With the expanded plate bundle resting only on the center bolt/spacers, support the plate bundle by hand and carefully remove the center bolts until the bundle can be pulled away from the tank/back plate. Remove the raw water inlet and outlet fittings. See Figure 4-93.

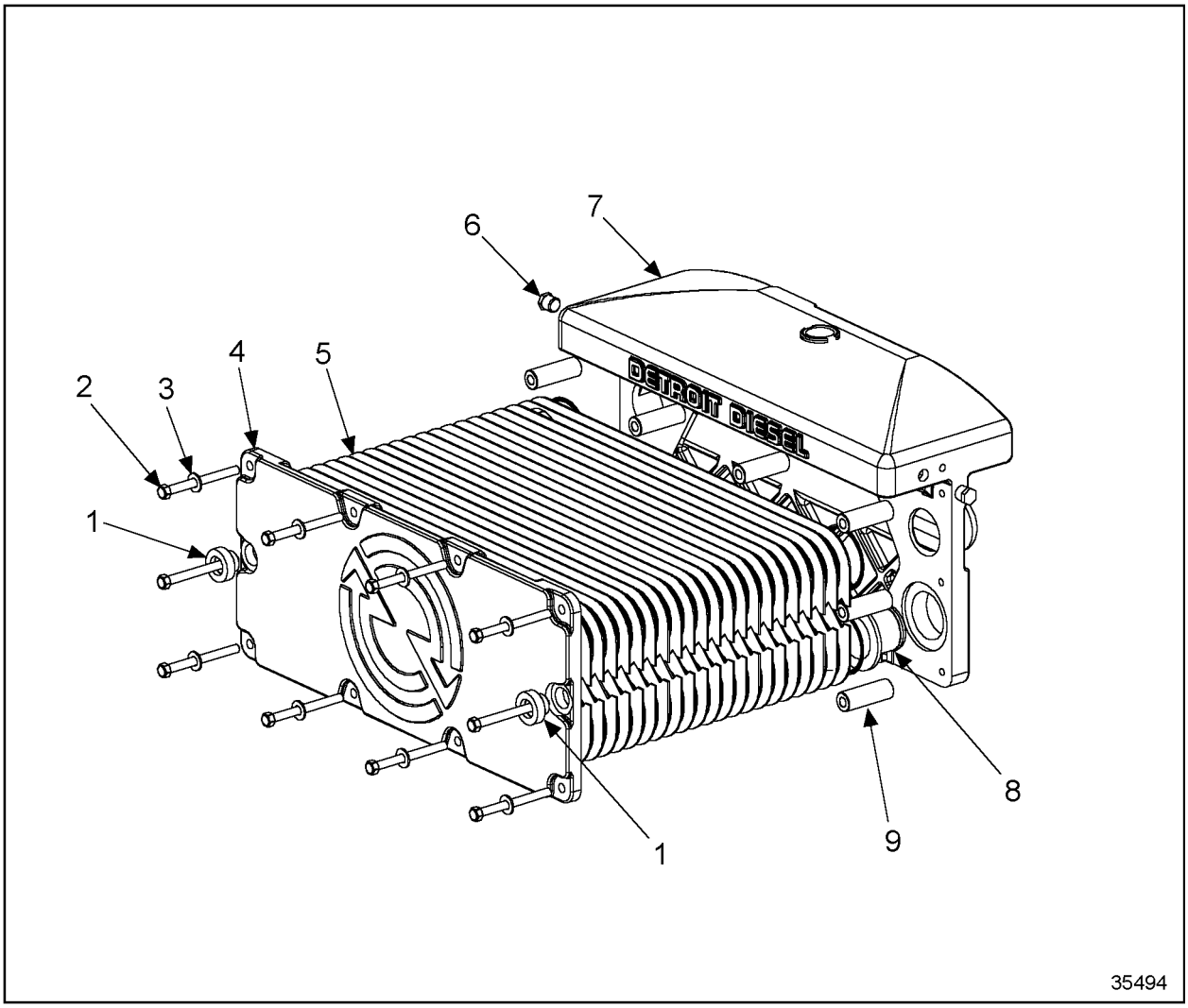

1. Bushing
2. Retaining Bolt
3. Washer
4. Front Plate
5. Plates
6. Sight Glass
7. Heat Exchanger Tank
8. Raw Water Inlet Fitting
9. Spacer

Figure 4-93 Location of Heat Exchanger Components

 Copyright © 2004 DETROIT DIESEL CORPORATION

CAUTION:

To avoid injury from improper use of chemicals, follow the chemical manufacturer's usage, handling, and disposal instructions. Observe all manufacturer's cautions.

CAUTION:

To avoid injury when using chemical substances, it is essential to observe the manufacturer's instruction for use, safety, and waste disposal.

CAUTION:

To avoid injury when using caustic cleaning agents, follow the chemical manufacturers usage, disposal, and safety instructions.

CAUTION:

To avoid injury from flying debris when using compressed air, wear adequate eye protection (face shield or safety goggles) and do not exceed 40 psi (276 kPa) air pressure.

5. Using pure mineral spirits or a mild commercial cleaning solvent, remove any residual sealing material from the tank/back plate and from the cast front cover plate. Blow-dry with compressed air.

(Rev. 2004) *All information subject to change without notice.*
6SE483 0401 Copyright © 2004 DETROIT DIESEL CORPORATION

4.12.3.1 Inspection of the Heat Exchanger Components

Inspect the heat exchanger assembly components as follows:

1. Inspect cooling plates carefully for pinholes, splits, dents, or distortion. Replace any plate showing obvious signs of damage.
2. Inspect gaskets on plates. Replace any gaskets showing signs of leakage, such as tears, cracks, or erosion.
3. Inspect for buildups of deposits on plates and remove, if found.

NOTE:
There are small balls welded into the gasket groove of each plate and corresponding holes in the gaskets. Gaskets are easily replaced, since they simply snap into place on the plates. A "4–corner" gasket is used on the sealing (first) plate and "standard" gaskets are used on the core plates and the closure (final) plate. Replacement plates and gaskets are available from authorized Detroit Diesel parts distributors.

4. Inspect raw water inlet and outlet fittings for dents, distortion, or damaged sealing areas on the flanges, and replace if required.
5. Inspect gasket contact surfaces on the tank/backplate for smoothness. If required, carefully smooth any rough areas that will come in contact with the gaskets on the plates.

 Copyright © 2004 DETROIT DIESEL CORPORATION

4.12.4 Assembly of the Heat Exchanger

Assemble the heat exchanger assembly as follows:

1. Install two M12 1.75 X 180 mm long bolts, each with two spacers, into the center right and center left holes in the heat exchanger tank/backplate (locations 9 and 10 see Figure 4-94). The spacers will properly align the plates during assembly.

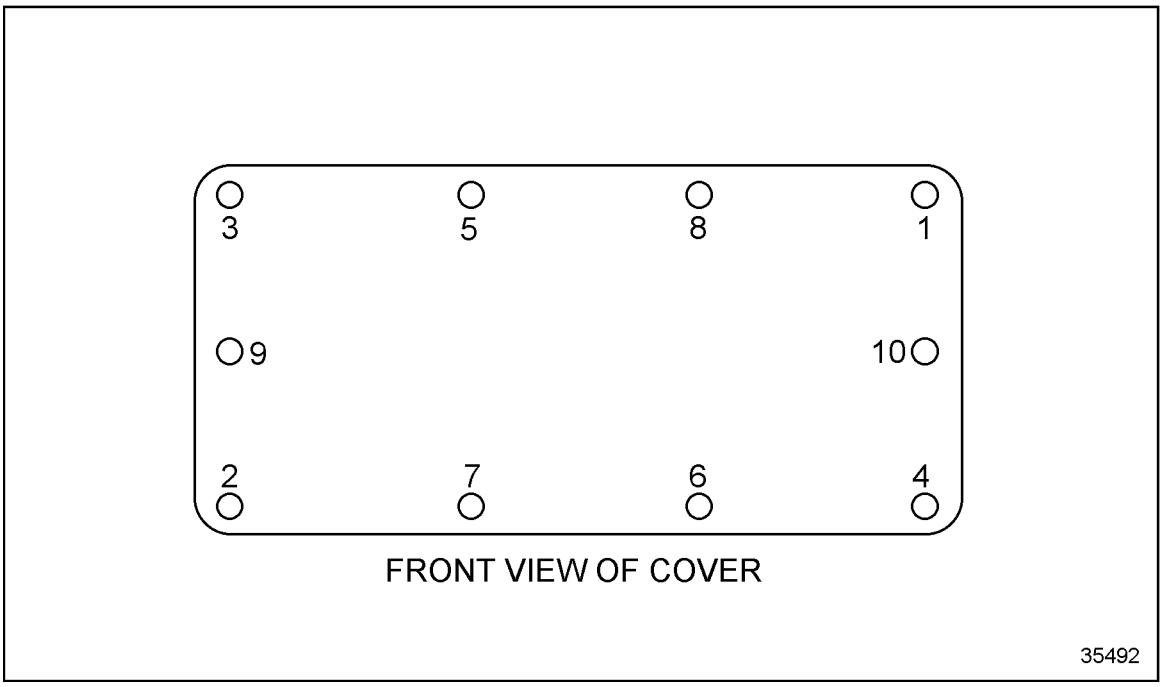

Figure 4-94 Heat Exchanger Bolt Hole Location

2. Install raw water inlet and outlet fittings. Install the curved fitting (elbow) on the right side (as viewed from the rear of the heat exchanger tank), and angle it 3 degrees down from horizontal (pointing right).

(Rev. 2004) *All information subject to change without notice.*
6SE483 0401 Copyright © 2004 DETROIT DIESEL CORPORATION

3. See Figure 4-95and install the first (sealing) plate, onto the center bolt/spacers. Install this plate with the gasketing side facing the tank and the letter "N" on the left-hand side as viewed from the rear of the heat exchanger tank.

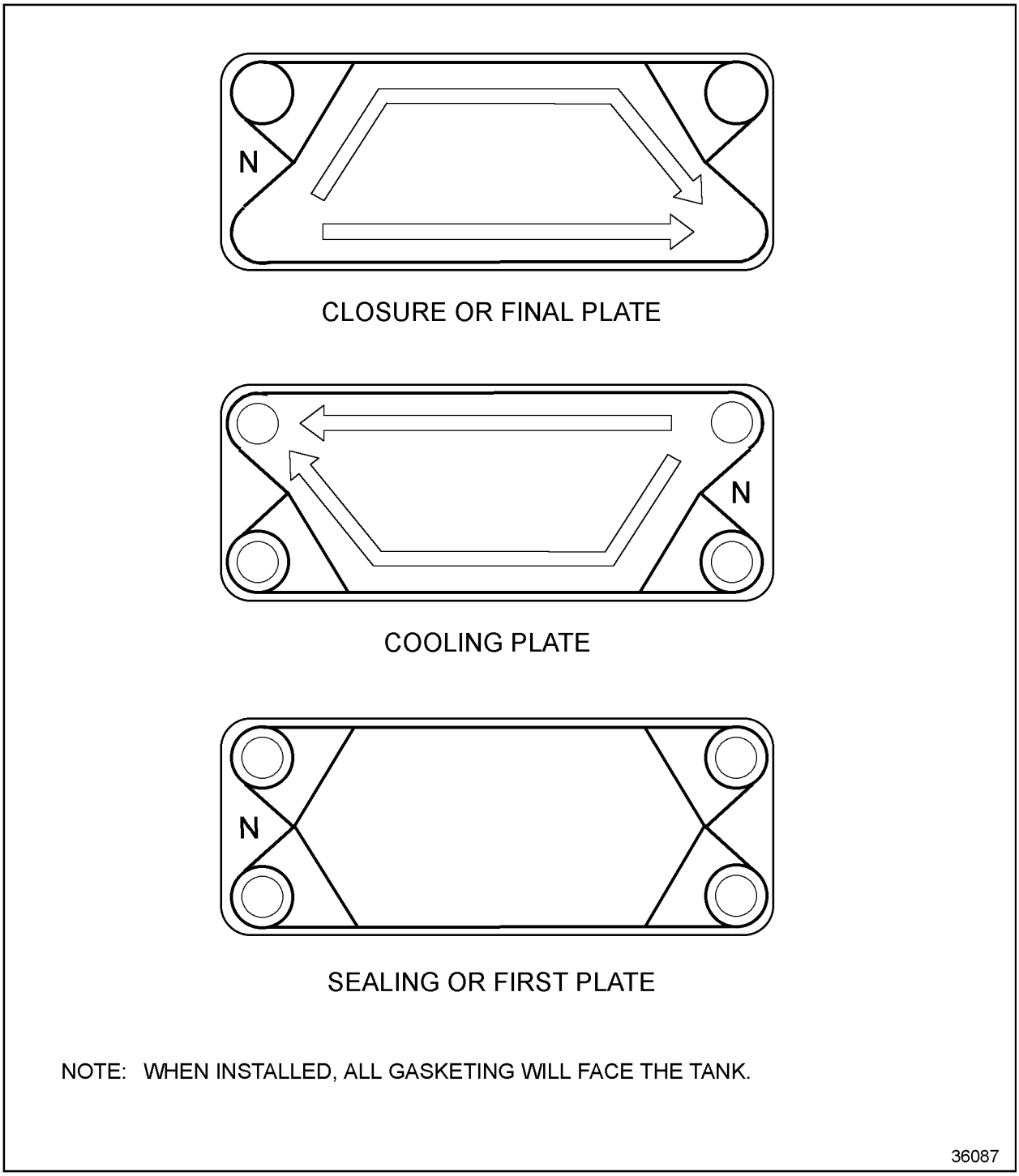

Figure 4-95 Gasket Faces and Orientation of Heat Exchanger Plates

 Copyright © 2004 DETROIT DIESEL CORPORATION

4. Install a core plate onto the center bolt/spacers with gasketing side against the smooth back of the sealing plate and the letter "N" on the right-hand side.
5. Invert the next core plate and install with gasketing side against the smooth back of the previous core plate and the letter "N" on the left-hand side.
6. Continue inverting and installing the remaining core plates, alernating the "N" locations right and left side until all core plates are installed.

NOTE:
Plates are correctly installed if the bent fins on the sides and ends touch each other, forming a honeycomb pattern, and not running parallel to each other. See Figure 4-96.

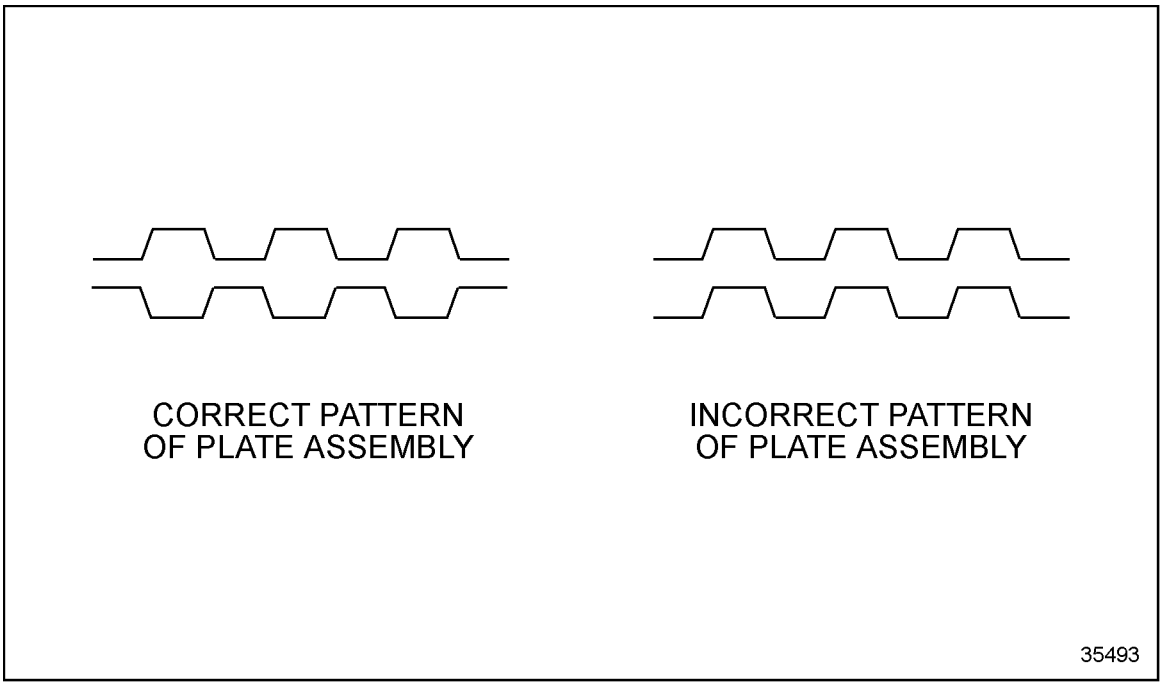

Figure 4-96 Correct and Incorrect Pattern of Heat Exchanger Plate Assembly

7. Install the closure plate (no openings) with gasketing against the smooth back of the last core plate.
8. When all cooler plates are stacked, install the cast aluminum front cover plate.

NOTE:
The wider web sections of the front cover plate are positioned toward the top (tank) side. Secure with four (4) long M12 1.75 X 180 bolts, spacers, and washers in positions 2, 5, 6 and 1. See Figure 4-93.

9. Position angled raw water outlet fitting three degrees below horizontal, facing outboard.

(Rev. 2004) *All information subject to change without notice.*
6SE483 0401 Copyright © 2004 DETROIT DIESEL CORPORATION

10. Use M12 1.75 X 180 mm bolts and spacers at locations 2, 5, 6 and 1 for initial tightening. Alternating from side to side, tighten 180 mm long bolts uniformly and evenly until shorter M12 1.75 X 130 mm bolts will reach the threads. When plates are compressed to allow use of 130 mm bolts, install the shorter bolts with washers and spacers in positions 3, 7, 8, and 4. Snug bolts, but do not tighten.
11. Remove 180 mm bolts from locations 2, 5, 6, and 1. Install 130 mm bolts with washers and spacers. See Figure 1-307. Snug bolts, but do not tighten.
12. Remove 180 mm bolts and one spacer from the center hole locations 9 and 10 and replace with 130 mm long bolts, spacers, and bushings.
13. See Figure 1-307for torque pattern and gradually snug up all bolts evenly so as not to warp or distort the plates. When bolts are bottomed against spacers, torque to 108 N·m (80 lb·ft) using the torque pattern shown.

4.12.5 Installation of the Heat Exchanger

Install the heat exchnager as follows:

1. If previously removed, install heat exchanger mounting bracket onto the gear case cover with four (4) M14 mounting bolts. Torque to 190 N·m (140 lb·ft). Install battery-charging alternator; refer to section 8.2.
2. Six synthetic rubber vibration isolators are used with the heat exchanger mounting bolts. Each isolator is installed with four No. 10– 24 X 0.5 in. L. slotted head screws. If previously removed, install four isolators onto the bracket base using four screws per isolator. Install the two remaining isolators onto the isolator mounting brackets attached to the gear case cover and the accessory drive cover plate.

NOTICE:
Before assembling the heat exchanger tank to the bottom support and engine fromt cover, make sure the isolators are positioned with their high sides against the tank. Failure to observe this precaution may result in component misalignment and greatly degraded isolator performance.

3. Using a suitable chain hoist and sling, carefully lower the heat exchanger onto the mounting bracket. Line up the holes in the isolators with the bolt holes in the bottom and back of the heat exchanger tank. Install six (6) M8 bolts through the isolators and torque to 35 N·m (26 lb·ft.).

 Copyright © 2004 DETROIT DIESEL CORPORATION

4. Using required blue connector hoses and hose clamps, attach the raw water inlet and outlet tubes to the heat exchanger tank. See Figure 4-97.

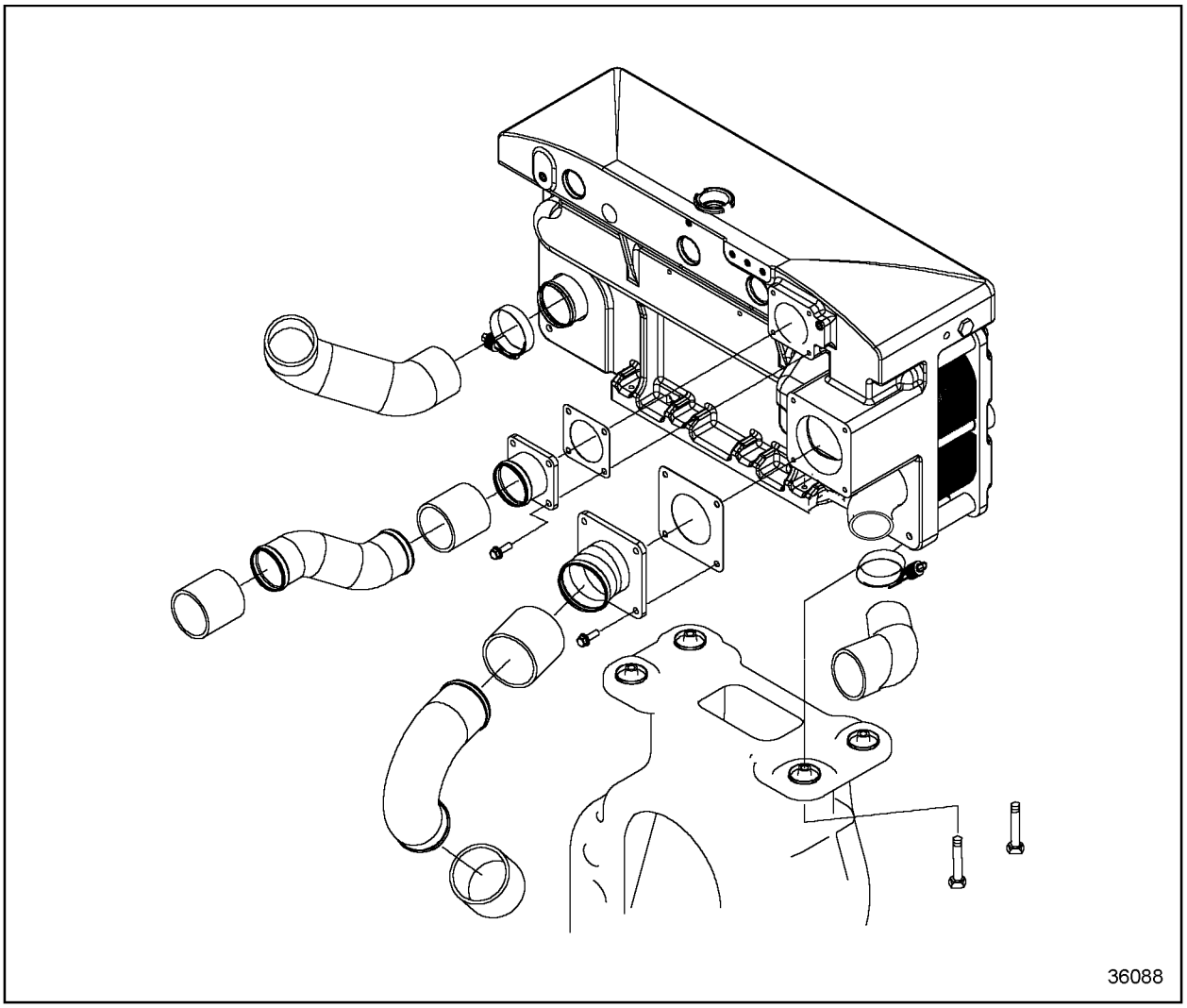

Figure 4-97 Back of Heat Exchanger Showing Piping

5. Using required blue connector hoses and hose clamps, attach the fresh water inlet and outlet tubes to the heat exchanger tank.
6. Fill the fresh water cooling system with the required coolant.
7. Prime the raw water pump, if required.

(Rev. 2004) *All information subject to change without notice.*
6SE483 0401 Copyright © 2004 DETROIT DIESEL CORPORATION

CAUTION:

Diesel engine exhaust and some of its constituents are known to the State of California to cause cancer, birth defects, and other reproductive harm.

- ☐ **Always start and operate an engine in a well ventilated area.**
- ☐ **If operating an engine in an enclosed area, vent the exhaust to the outside.**
- ☐ **Do not modify or tamper with the exhaust system or emission control system.**

8. Start the engine and check for leaks.

 Copyright © 2004 DETROIT DIESEL CORPORATION

4.13 JABSCO® ENGINE COOLING RAW WATER PUMP (MARINE)

A positive displacement pump circulates raw water through the heat exchanger to lower the engine coolant temperature. See Figure 4-98. The pump is attached to a drive assembly bolted to the gear case on the left side of the engine and driven by the bull gear. A hub bolted to the opposite end of the drive assembly meshes with the gear on the pump drive shaft to drive the pump. See Figure 4-99.

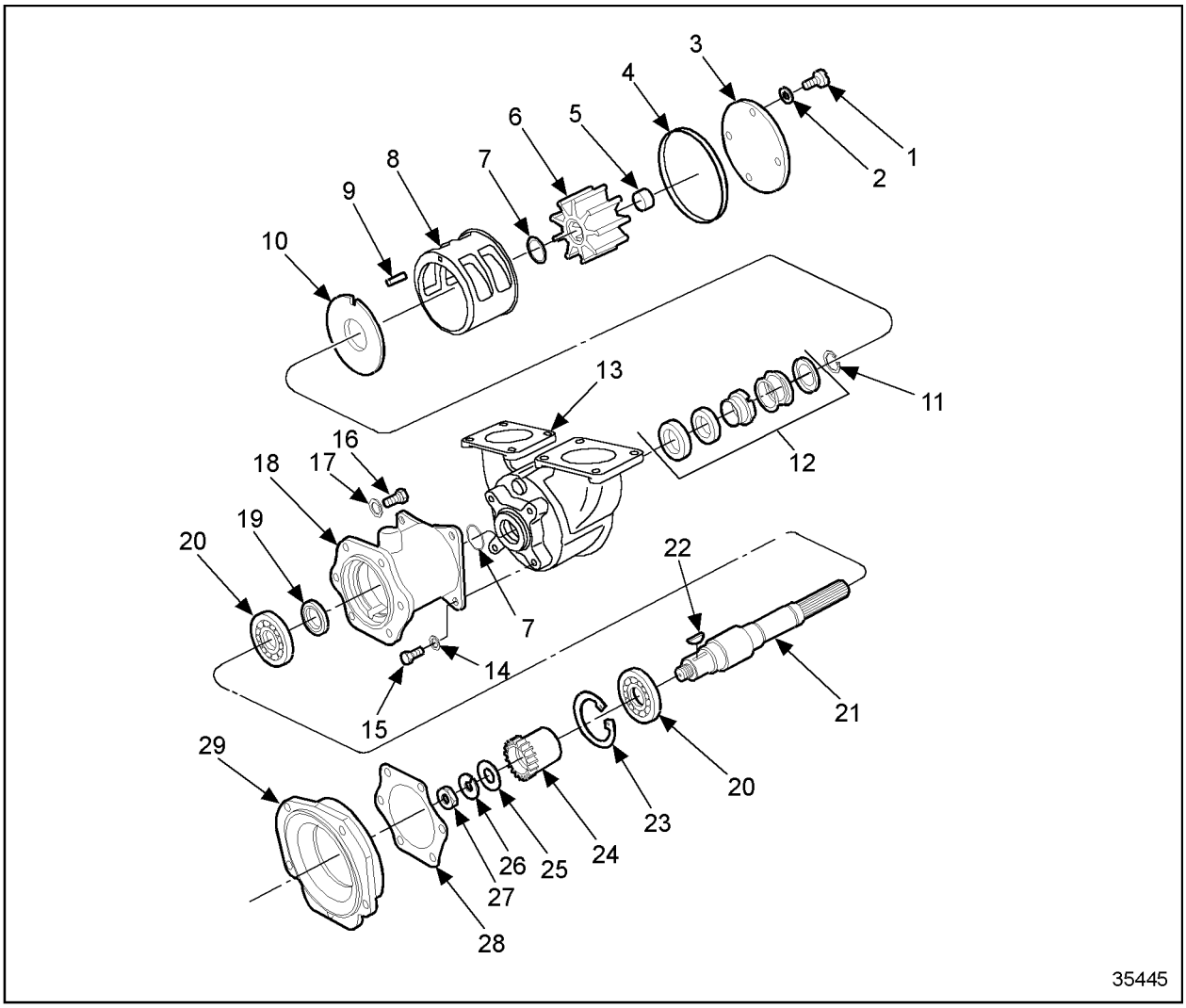

(Rev. 2004) All information subject to change without notice.
6SE483 0401 Copyright © 2004 DETROIT DIESEL CORPORATION

1. Hex Bolt
2. Flat Washer, 1/2 (4)
3. End Cover
4. O-ring Seal
5. Seal Spling
6. Impeller
7. O-ring
8. Cam Liner
9. Dowel Pin
10. Wear Plate
11. Retaining Ring
12. Seal Mechanical
13. Body
14. Lock Washer, 5/16 (4)
15. Hex Head Screw, 5/16–18 x 3/4
16. Hex Head Screw, 3/8–16 x 1” (6)
17. Lock Washer, 3/8 (6)
18. Bearing Housing
19. Seal
20. Bearing
21. Shaft
22. Woodruff Key
23. Retaining Ring
24. Gear
25. Flat Washer (1)
26. Lock Washer, 5/8
27. Hex Nut, 5/8 — 18
28. Gasket
29. Adaptor

Figure 4-98 Raw Water Pump Assembly

 Copyright © 2004 DETROIT DIESEL CORPORATION

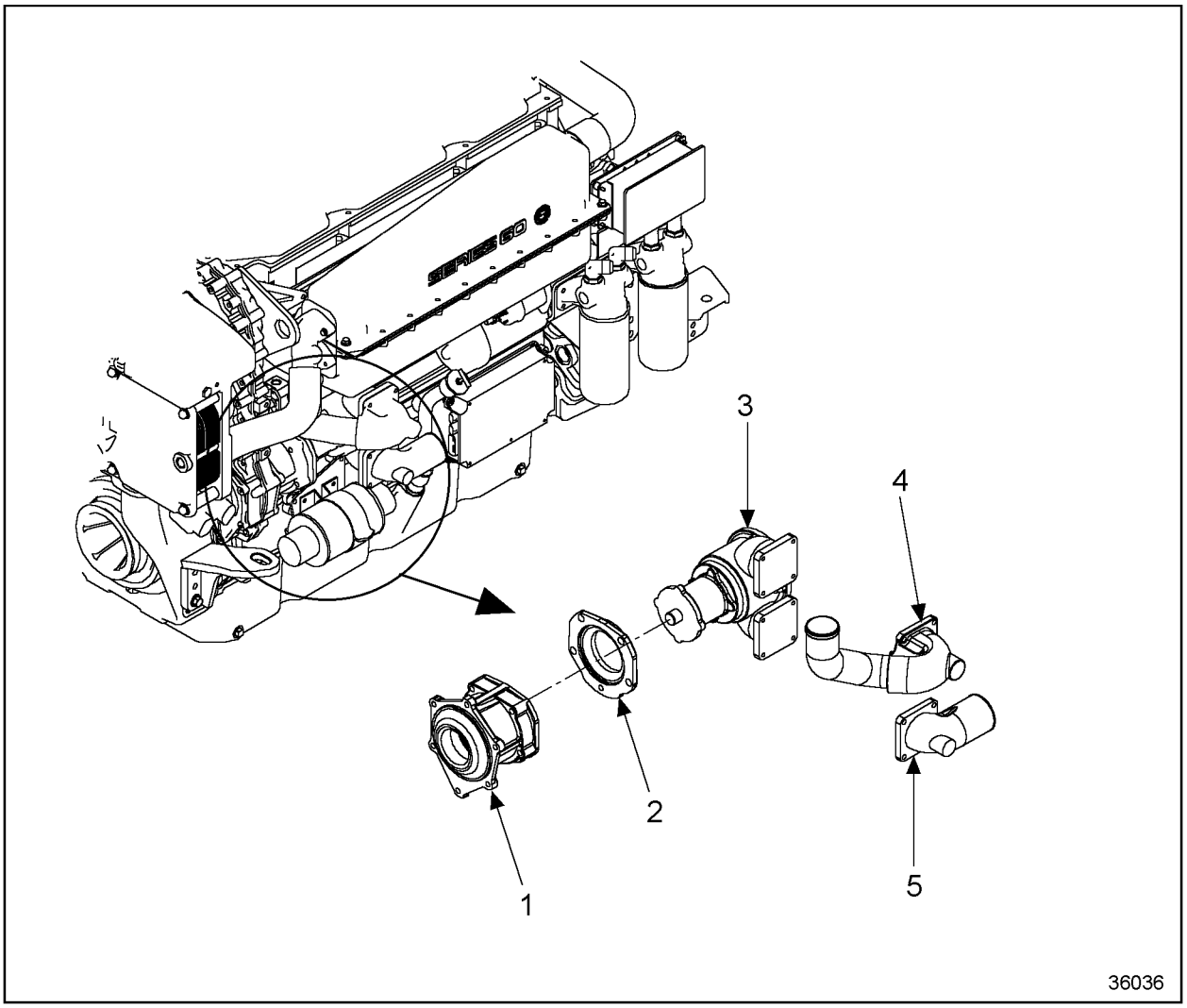

1. Raw Water Pump Drive Assembly
2. Mounting Flange/Adaptor
3. Raw Water Pump Assembly
4. Raw Water Outlet Elbow
5. Raw Water Inlet Elbow

Figure 4-99 Raw Water Pump Mounting

(Rev. 2004) *All information subject to change without notice.*
6SE483 0401 Copyright © 2004 DETROIT DIESEL CORPORATION

The gear-driven pump drive shaft is carried on a double-row ball bearing located in the pump housing flange end.

NOTICE:
The pumped water lubricates the impeller. To avoid possible impeller damage, do not run the impeller dry for longer than normally required for the pump to prime itself.

The raw water pump has an impeller that rotates against a polyurethane cam and liner inside the pump body (housing). A wear plate, on the inboard end of the impeller, is used to prevent pump housing wear. Slots in the plate register with dowel pins in the pump housing, cam and liner, preventing the plate from rotating with the impeller.

The wear plate can be reversed if plate wear becomes excessive. A rotary-type seal assembly seals against leakage along the shaft. The shielded type double-row ball bearing is filled with lubricant when assembled. No further lubrication is required.

The pump can operate clockwise or counterclockwise. On the Series 60 marine engine, raw water is drawn into the pump through the opening at the bottom of the pump housing.

NOTICE:
Always prime the raw water pump before starting the engine. Since water acts as a lubricant for the impeller, failure to prime the pump (or at least wet the impeller vanes to induce a self-priming suction) can result in severe impeller damage when the engine is started. Insufficient raw water flow into the heat exchanger can lead to overheating and engine damage.

Prime a raw water pump as follows:

1. Remove the pipe plug or zinc electrode from the water inlet elbow. This is the elbow mounted on the lower pump opening.
2. Pour in at least a pint of water.
3. Replace the plug or electrode.

 Copyright © 2004 DETROIT DIESEL CORPORATION

4.13.1 Repair or Replacement of the Jabsco Raw Water Pump

To determine if repair is possible or replacement of the Jabsco® raw water pump is necessary, perform the following procedure. See Figure 4-100.

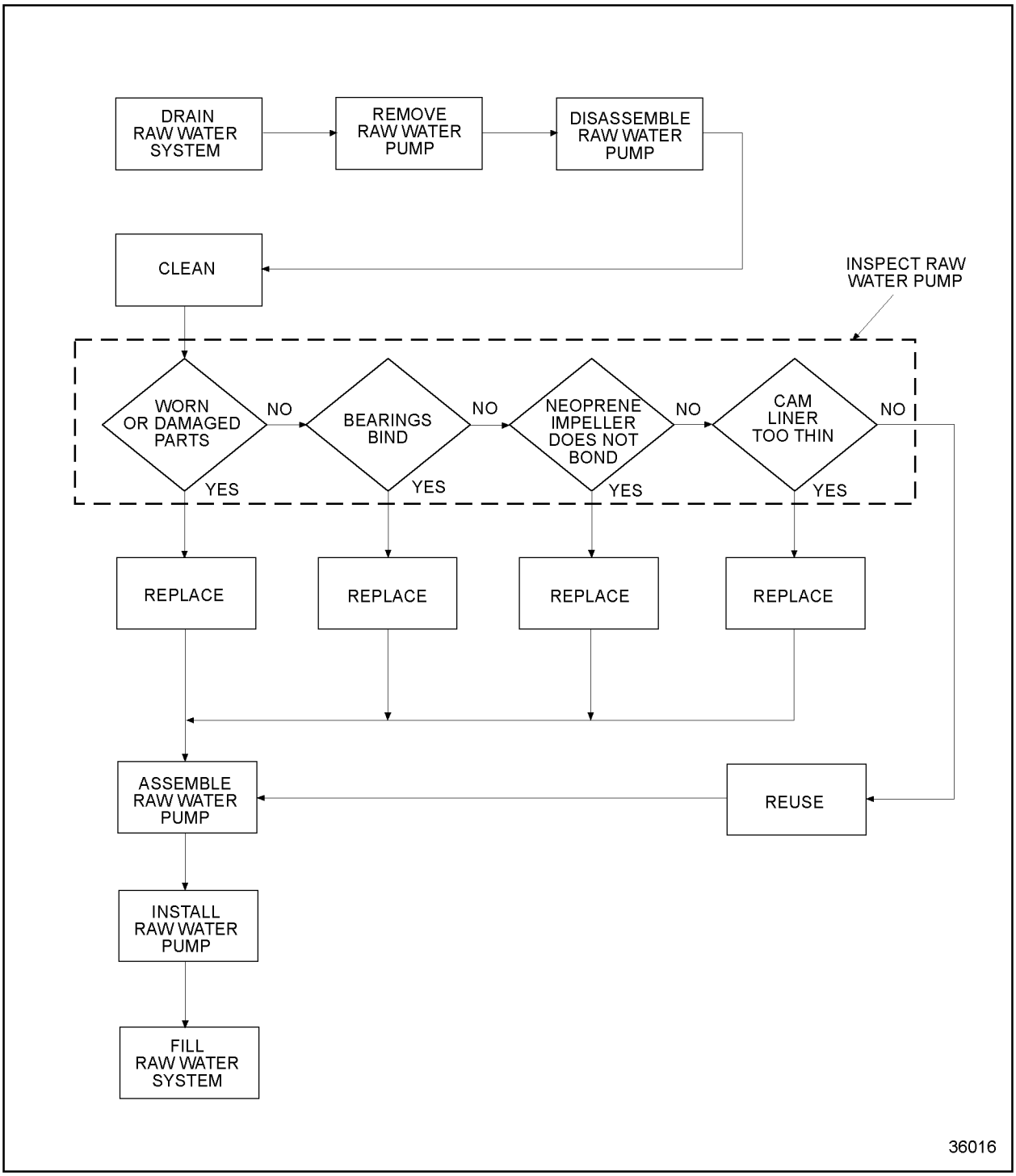

Figure 4-100 Flowchart for Repair or Replacement of Raw Water Pump

(Rev. 2004) *All information subject to change without notice.*
6SE483 0401 Copyright © 2004 DETROIT DIESEL CORPORATION

4.13.2 Removal of the Jabsco Raw Water Pump

Remove the raw water pump as follows:

NOTE:
Seal parts can be removed and replaced without removing the pump from the engine. Refer to section 4.13.3 for seal removal procedures.

1. Drain the raw water system.
2. Loosen the hose clamps at the outlet elbow and slide the hose along the tube.
3. Loosen the hose clamps at the inlet elbow and slide the hose along the tube.
4. Remove the bolts and lock washers holding the inlet and outlet elbows to the pump, and lift the elbows from the pump.
5. Remove the gaskets.
6. Remove the five bolts holding the pump to the drive assembly.
7. Tap the pump body with a soft hammer to loosen the pump from the drive assembly.
8. Withdraw the pump straight out from the drive assembly while disengaging the drive gear from the coupling.
9. Cover the pump opening in the flywheel housing with a clean cloth to prevent foreign matter from entering.

 Copyright © 2004 DETROIT DIESEL CORPORATION

4.13.3 Disassembly of the Jabsco Raw Water Pump

Disassemble a raw water pump with a polyurethane or phenolic cam and liner as follows:

1. Remove the end cover screws and end cover. See Figure 4-101.

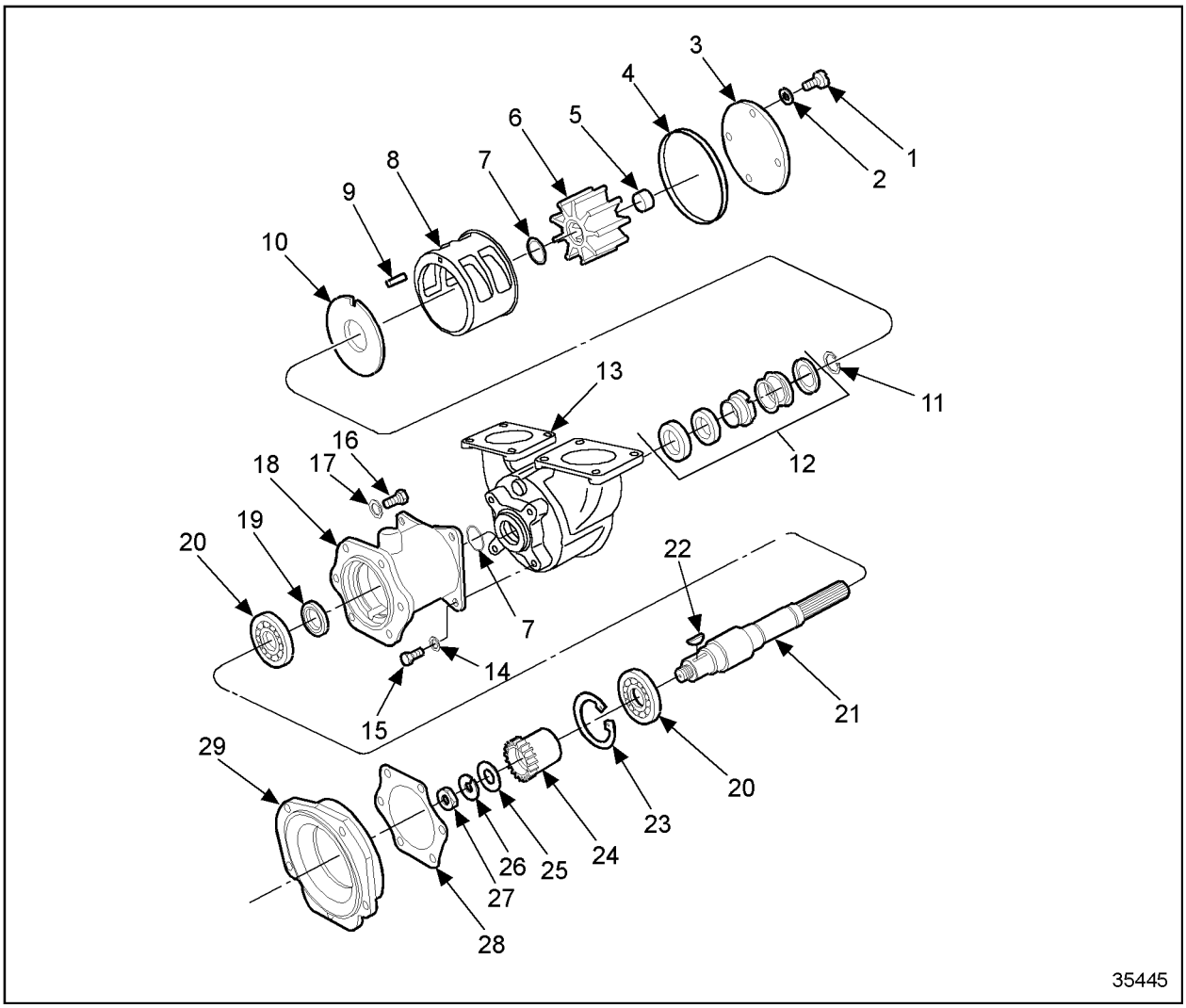

(Rev. 2004) All information subject to change without notice.
6SE483 0401 Copyright © 2004 DETROIT DIESEL CORPORATION

1. Hex Bolt
2. Flat Washer, 1/2 (4)
3. End Cover
4. O-ring Seal
5. Seal Spling
6. Impeller
7. O-ring
8. Cam Liner
9. Dowel Pin
10. Wear Plate
11. Retaining Ring
12. Seal Mechanical
13. Body
14. Lock Washer, 5/16 (4)
15. Hex Head Screw, 5/16–18 x 3/4
16. Hex Head Screw, 3/8–16 x 1” (6)
17. Lock Washer, 3/8 (6)
18. Bearing Housing
19. Seal
20. Bearing
21. Shaft
22. Woodruff Key
23. Retaining Ring
24. Gear
25. Flat Washer (1)
26. Lock Washer, 5/8
27. Hex Nut, 5/8 — 18
28. Gasket
29. Adaptor

Figure 4-101 Raw Water Pump Details (Synthetic Cam and Liner Design)

 Copyright © 2004 DETROIT DIESEL CORPORATION

2. Remove the end cover O-ring seal from the pump body.
3. Grasp hub of impeller with pliers, and remove it from the impeller bore.

NOTE:
The spline seal will come off with the impeller. If the impeller O-ring remains on the shaft, remove it.

4. Remove cam liner from pump body.
5. Remove inner wear plate.
6. Remove the seal retaining ring. Take care not to scratch the shaft.
7. Remove the carbon portion of the mechanical seal with tension spring attached.
8. Remove bolts securing adaptors elbows to pump inlet and outlet ports.
9. Hold the pump body securely, and remove the four 5/16 in. screws and lock washers holding the pump body to the bearing housing.
10. Remove pump body from the bearing housing and shaft subassembly.
11. Remove any residual gasket material from port adaptors.
12. Remove slinger O-ring from the shaft.
13. From the drive end of the pump body, press out the remaining mechanical seal parts (boot and ceramic seat).

Remove and disassemble the pump bearing housing on raw water pumps with polyurethane or phenolic cam and liners as follows:

1. With housing held securely, remove the six 3/8 in. screws and lock washers in the housing flange.
2. Remove the bearing housing and shaft subassembly by pulling straight out from the adaptor. Place the bearing housing on a clean bench surface.
3. Prevent the shaft from rotating by holding it with a wrench on the shaft flats of the impeller end. Then, remove the drive gear retaining nut, lock washer, and retaining flat washer.
4. Remove drive gear from the shaft. A punch and small mallet may be used to gently tap the underside of the drive gear teeth to loosen the gear from the shaft.
5. Remove the Woodruff key.
6. Remove the retaining ring securing the bearing in the bearing housing.
7. Press against the impeller end of the shaft to remove the shaft and bearing subassembly from the bearing housing.

(Rev. 2004) *All information subject to change without notice.*
6SE483 0401 Copyright © 2004 DETROIT DIESEL CORPORATION

8. Support the inner race of the bearing, and press the shaft out of the bearing.
9. Remove the retaining ring securing the second bearing in the bearing housing.
10. Press against the impeller end of the shaft to remove the shaft and bearing subassembly from the bearing housing.
11. Support the inner race of the second bearing, and press the shaft out of the bearing.
12. From the pump end of the bearing housing, push the oil seal out of the housing. Discard the seal.

Prior to inspection, clean all the raw water pump parts as follows:

NOTICE:

To avoid bearing damage, do not wash the shielded bearing. Dirt may be washed in and cleaning fluid may not wash out of the bearing.

1. Wipe the bearing clean with a dry cloth.
2. Wash parts in clean fuel oil.

CAUTION:

To avoid injury from flying debris when using compressed air, wear adequate eye protection (face shield or safety goggles) and do not exceed 40 psi (276 kPa) air pressure.

3. Dry parts with compressed air.

 Copyright © 2004 DETROIT DIESEL CORPORATION

4.13.3.1 Inspection of the Jabsco Raw Water Pump

Perform the following steps to inspect the Jabsco raw water pump:

1. Inspect the bearing as follows:
   [a] Hold the inner race, and revolve the outer race slowly.
   [b] Replace the bearing if it is worn or does not roll freely.
2. Inspect the seal assembly as follows:
   [a] Examine the seal assembly components.
   [b] Replace worn or damaged parts.
3. Inspect the oil seal contact shaft surfaces as follows:
   [a] Inspect the shaft surfaces that contact the oil seal for scratches and grooves.
   [b] If scratched, smooth the surface with a crocus cloth dampened in fuel oil.
   [c] If grooved, replace the shaft.
4. Inspect the impeller as follows:
   [a] Ensure the neoprene bonds to the metal.
   [b] Inspect the impeller blades.
   [c] If the blades have a permanent set, replace the impeller.
5. Inspect the wear plate as follows:
   [a] Examine the wear plate for burrs and excessive wear.
   [b] If burred, remove the burrs from the plate.
   [c] If slightly worn, reverse the plate.
   [d] If excessively worn, replace the plate.
6. Inspect a polyurethane or phenolic cam liner as follows:
   [a] Check the cam liner thickness.
   [b] If the thickness is 3/8 or less at its thickest section, replace the cam liner.

(Rev. 2004) *All information subject to change without notice.*
6SE483 0401 Copyright © 2004 DETROIT DIESEL CORPORATION

4.13.4 Assembly of the Jabsco Raw Water Pump

Replace the seal as follows:

1. If removed, place the gasket and seal seat over the shaft, and press them into position in the seal cavity.
2. Assemble the carbon seal, seal ring, and washer in their proper positions, and slide them over the shaft and against the seal seat.

NOTE:
Ensure the seal ring is contained snugly within the ferrule, gripping the shaft.

3. Install the Marcel washer next to the flat washer.
4. Compress the impeller blades to clear the offset cam, and press the impeller onto the splined shaft.
5. Install the spline.
6. Turn the impeller several turns in its normal operating direction to properly position the blade.
7. Use a new gasket; install the cover on the housing.

Assemble the raw water pump with polyurethane or phenolic cam and liners as follows:

1. Install new slinger O-ring on the shaft near the bearing housing.
2. Install mechanical seal components. Do not allow seal components to become soiled during assembly.
3. Lubricate ceramic seal seat boot with water only, and press into pump body seal bore.
4. Install ceramic seal seat. Exposed ceramic surface should face toward impeller bore.
5. Slide the pump body over the shaft, taking care not to dislodge seal seat as body is moved toward (and aligned with) bearing housing.
6. Attach the pump body to the bearing housing with four 5/16 in. screws and lock washers. Torque to 19-22 N·m (14-15 lb·ft).
7. Install the carbon portion of mechanical seal with tensioning spring and spring washer shaft, and position it in seal bore with carbon face against ceramic seal seat.
8. Slide seal retaining ring over shaft against seal thrust ring, and position it in retaining ring groove.
9. Install inner wear plate in pump body, aligning notch in wear plate with pin in body.
10. Lubricate body bore with water pump grease.
11. Align the hole in top of cam liner with pin in pump body, and push cam liner into body.
12. Liberally coat inside of cam liner with water pump grease.
13. Insert impeller O-ring in groove in impeller recess.

 Copyright © 2004 DETROIT DIESEL CORPORATION

14. With O-ring end of impeller facing the pump housing, rotate the impeller in its operating direction to bend vanes under the cam, and push into bore until impeller insert flats align with shaft flats.
15. Push impeller completely into the impeller bore. The impeller end should be approximately even with cam liner.
16. Install the rubber spline plug into the impeller end.
17. Place new end cover seal ring into the groove in the pump body.
18. Install the end cover.
19. Install four 1/4 in. hex-head bolts in end plate cover. Torque to 9 N·m (80 lb· in). Do not over-torque.

Assemble the pump bearing housing as follows:

1. Lightly coat the outside diameter of a new oil seal with clean engine oil.
2. >From the drive end of the bearing housing, press new oil seal into seal bore. Seal lip must point to drive end of housing.
3. With pressure applied to inner race of bearings, press bearings onto shaft.
4. With pressure applied to outer race of outer bearing, install bearing and shaft subassembly into bearing housing.
5. Install bearing retaining ring in bearing housing, ensuring ring is securely seated in the ring groove.
6. Insert Woodruff key into groove on shaft end.
7. Gently tap drive gear onto shaft with a small plastic-face mallet.
8. Install flat washer, lock washer, and retaining nut onto shaft.
9. Hold shaft with a wrench on shaft flats at impeller end, and torque retaining nut to 33-41 N·m (24-30 lb·ft).
10. Install new adaptor flange gasket; secure pump assembly to adaptor with four mounting bolts. Torque to 24-31 N·m (18-23 lb·ft). Use wrench J 35948to torque the upper inside bolt to 24-31 N·m (18-23 lb·ft).
11. Using new gaskets, attach raw water pump inlet and outlet adaptors.

(Rev. 2004) *All information subject to change without notice.*
6SE483 0401 Copyright © 2004 DETROIT DIESEL CORPORATION

4.13.5 Installation of the Jabsco Raw Water Pump

Install the raw water pump as follows:

NOTE:
Seal parts can be removed and replaced without removing the pump from the engine. Refer to section 4.13.3 for seal removal procedures.

1. Remove the clean cloth covering the pump opening.
2. Install the pump straight into the drive adaptor assembly while engaging the drive gear to the coupling.
3. Tap the edge of the bearing housing flange with a soft hammer to secure the pump into the adaptor.
4. Install the adaptor-to-adaptor bolts and lock washers.
5. Install new gaskets to the inlet and outlet elbows and install the elbows on the pump.
6. Secure the inlet and outlet elbows to the pump with bolts and lock washers.
7. Slide the hose onto the inlet tube, and tighten the hose clamps at the inlet elbow.
8. Slide the hose onto the outlet tube, and tighten the hose clamps at the outlet elbow.
9. Close drain cocks, and fill the raw water system. Prime the raw water pump by removing the pipe plug or zinc electrode from the water inlet elbow and powering at least a pint of water into the pump housing. Replace the plug or zinc electrode.

 Copyright © 2004 DETROIT DIESEL CORPORATION

(Rev. 2004) All information subject to change without notice.
6SE483 0401 Copyright © 2004 DETROIT DIESEL CORPORATION

4.A ADDITIONAL INFORMATION

Description **Page**

SPECIFICATIONS 4-144
Torque Specification Exceptions - Fasteners 4-144
EXCEPTIONS TO STANDARD FASTENER TORQUE SPECIFICATIONS 4-144

 Copyright © 2004 DETROIT DIESEL CORPORATION

SPECIFICATIONS

This section contains the exceptions to the fastener torque specifications.

Torque Specification Exceptions - Fasteners

The proper bolt and nut torque is dependent on its size. The proper torque for metric nuts and bolts are listed in Table 1-36 in the "General Information" section at the beginning of this manual. The exceptions to this rule are listed in Table 4-2. Standard (nonmetric) nut and bolt torque specifications are listed in Table 1-38 in the "General Information" section at the beginning of this manual.

EXCEPTIONS TO STANDARD FASTENER TORQUE SPECIFICATIONS

Bolt and Size, mm	Torque, N · m	Torque, lb · ft
M24 X 1.0	203-230	150-170

Table 4-2 Exceptions - Metric Fastener Torque Specifications

NOTE:
The water pump drive gear retaining nut is M24 X 1.0.

(Rev. 2004) *All information subject to change without notice.*
6SE483 0401 Copyright © 2004 DETROIT DIESEL CORPORATION

5 FUEL, LUBRICATING OIL, AND COOLANT

Section **Page**

5.1 FUEL 5-3
5.2 LUBRICATING OIL (DIESEL) 5-12
5.3 LUBRICATING OIL FOR THE SERIES 60G ENGINE 5-19
5.4 COOLANT 5-22

 Copyright © 2004 DETROIT DIESEL CORPORATION

5.1 FUEL

The quality of fuel used is a very important factor in obtaining satisfactory engine performance, long engine life, and acceptable exhaust emission levels. The Series 60 engine was designed to operate on most diesel fuels marketed today. In general, fuels meeting the properties of ASTM Designation D 975 (Grades 1–D and 2–D) have provided satisfactory performance. The ASTM D 975 specification, however, does not in itself adequately define the fuel characteristics necessary to assure fuel quality. The properties listed in Table 5-1, Diesel Fuel Specification Table, provide optimum engine performance.

 Copyright © 2004 DETROIT DIESEL CORPORATION

General Fuel Classification	ASTM Test	No. 1-D	No. 2-D#
API Gravity, @ 60°F	D 287	40 - 44	34 - 38
Specific Gravity, @ 60°F	D 1298	0.806 - 0.825	0.835 - 0.855
Flash Point, °C, Minimum	D 93	38	52
Viscosity, Kinematic - cSt @ 40°C	D 445	1.3 - 2.4	1.9 - 4.1
Sulfur wt% Maximum for On-Road Use ‡	D 2622	0.05	0.05
Cloud Point °F (°C) †	D 2500	See Note	See Note
Cetane No., Minimum †	D 613	45	45
Cetane Index, Minimum †	D 4737	40	40
Distillation % Vol. Recovery, °C (°F)	D86	-	-
- IBP, Typical*	-	350 (177)	375 (191)
- 10% Typical*	-	385 (196)	430 (221)
- 50% Typical*	-	425 (218)	510 (256)
- 90% Maximum	-	500 (260)	625 (329)
- 95% Maximum*	-	550 (288)	671 (355)
- Recovery Volume, % Minimum*	-	98	98
Water & Sediment, % Maximum	D 2709	0.05	0.05
Ash, % Maximum	D 482	0.01	0.01
Carbon Residue on 10%, wt%, Maximum	D 524	0.15	0.35
Copper Corrosion, Maximum 3h	D 130	No. 3	No. 3
Accelerated Storage Stability, Maximum*	D 2274	15 mg/L	15 mg/L
Dupont Pad Test, Rating Maximum*	TM-F21-61 ||	7	7
Lubricity, gm, Minimum*	SLWT §	2800	2800

* Not specified in ASTM D 975

† Differs from ASTM D 975

‡ The sulfur content of diesel fuel for off road use is 0.5% maximum. This fuel is dyed red.

§ Scuffing load, ball on cylinder wear test, higher values indicate less wear and greater lubricity.

|| Alternate test method predicting fuel stability. The visual rating is related to amount of particulate collected, on a scale of 1 (clean) to 20 (dirty).

No. 2 diesel fuel may be used in city coach engine models which have been certified to pass Federal and California emission standards.

Note: The cloud point should be 10°F (6°C) below the lowest expected fuel temperature to prevent clogging of fuel filters by wax crystals.

Table 5-1 Diesel Fuel Specifications

(Rev. 2004) *All information subject to change without notice.*
6SE483 0401 Copyright © 2004 DETROIT DIESEL CORPORATION

5.1.1 Fuel Lubricity

Fuels such as those containing kerosene and jet fuel and some low sulfur fuels have characteristics which may cause operational concerns in some engine designs. The fuel injection systems used on VM and natural gas Detroit Diesel manufactured engines has demonstrated trouble-free operation on a wide variety of fuels without the need for supplemental additives.

5.1.2 Biodiesel Fuels

Biodiesel fuels may be produced from a wide variety of sources and may be used in all DDC engines provided (1) they are derived from soy methyl ester (SME) and/or rape methyl ester (RME) and (2) are blended to a maximum of 20% by volume in diesel fuel. The resulting blend must meet the properties listed in Table 5-1.

Although such blends purport to reduce exhaust emission particulates, they increase the nitrogen oxides in engine exhaust. They also tend to have poorer thermal stability and may deteriorate engine oil TBN more rapidly than wholly petroleum-based diesel fuels. These fuel blends have not been fully evaluated relative to diesel fuel system durability or engine oil effects.

 Copyright © 2004 DETROIT DIESEL CORPORATION

5.1.3 Other Fuels

In addition to the diesel fuels listed in Table 5-1, customers have used other fuels successfully, including fuels marketed as premium diesel fuels, kerosene-based jet fuels, and other fuels listed in Table 5-2. These fuels have provided economic and availability advantages for some applications, particularly where 1-D type fuels are required, and may be used in all Detroit Diesel engines. These fuels should be accompanied by exhaust emission data demonstrating emission equivalency to 1-D for those engines requiring 1-D fuel. Fuel type specifications and applications are listed in Table 5-3.

Property	Jet A/A-1 D 1655	JP-5	JP-8	CONUS DF-1	CONUS DF-2	OCONUS DF-2
API Gravity, @ 605F	44.3	41.1	45.6	42.3	34.2	38.5
Flash Point, 5C	3	62	45	50	74	70
Viscosity, Kin., cSt @ 405C	-	1.5	1.2	1.6	2.8	3.0
Cloud Point 5C	-40	-46	-47	-41	-12	-19
Sulfur, % mass	0.3 Max.	0.4 Max.	0.4 Max.	0.05 Max.	0.05 Max.	0.3 Max.
Cetane Number	-	42	45	44	47	49
Distillation % Vol. Recovery, 5C	-	-	-	-	-	-
IBP	-	180	157	174	190	176
10% Typical	205	191	175	196	222	219
50% Typical	Report	215	200	219	265	365
90% Max.	Report	242	236	246	313	311
Final Boiling Point, Max. Temp.	300	-	-	-	-	-
Heat Content, Btu/gal., Net	123,608	125,270	123,069	125,960	131,207	127,820

Table 5-2 Selected Typical Fuel Properties

(Rev. 2004) *All information subject to change without notice.*
6SE483 0401 Copyright © 2004 DETROIT DIESEL CORPORATION

Type	NATO Spec.	Mil Spec.	Application
JP-4	F-40	Mil-T-5624	Jet Fuel, Contains 50% Gasoline, *Not Recommended*
JP-5	F-44	Mil-T-5624	Jet Fuel, Kerosene Based
JP-8	F-34	Mil-T83133	Jet A-1 with De-icer and Corrosion Inhibitor
Jet A	None	None	Industry Standard Jet Fuel
Jet A-1	F-35	None	Jet Fuel, ASTM D 1655
DF-1/DF-2	F-54	VVF-800 CONUS	Specified Military Use Inside Continental U.S.
DF-2	F-54	VVF-800 OCONUS	Specified Military Use Outside Continental U.S.

Table 5-3 Fuel Type Specifications and Applications

Lower density fuels, such as those listed in Table 5-2 and "winter blended" diesel fuels, have a lower volumetric heat content than the standard 2-D fuel listed in Table 5-1. Operating with these fuels will result in reduced engine output and reduced fuel mileage, compared to standard 2-D fuel. Reductions of 5% are not unusual and may be as high as 10%. A good rule of thumb is: The engine power is proportional to the heating value of the fuel.

Lower density fuels also tend to have lower viscosity and poor lubrication characteristics.

 Copyright © 2004 DETROIT DIESEL CORPORATION

5.1.4 Fuel Cleanliness

Fuel should be clean and free of contamination. Storage tanks and stored fuel should be inspected regularly for dirt, water, or water-emulsion sludge, and cleaned if contaminated. Storage instability of the fuel can lead to the formation of varnish or sludge in the tank. The presence of these contaminants from storage instability must be resolved with the fuel supplier. If fuel is stored on site, the following is recommended:

NOTICE:
Do not use a fuel storage tank or lines made from galvanized steel. The fuel will react chemically with the galvanized coating to form powdery flakes that will quickly clog fuel filters and cause damage to the fuel pump and injectors.

1. Keep the storage tank filler cap covered to prevent contamination by rain water.
2. Keep the tank clean, especially around the filler cap and tap areas.
3. Position the tank so that it tilts slightly toward the bottom drain. This will make it easier to drain accumulated water and sediment.
4. Minimize condensation by keeping the tank reasonably filled at all times.
5. After filling the fuel storage tank, wait a few hours before filling equipment tanks. This will allow contaminants to settle.

5.1.5 Cold Weather Operation

In cold weather, diesel fuel will form wax crystals that can restrict flow and clog filters. Fuel suppliers approach this problem several ways. Some provide a specially refined product, while others may use flow improving additives or winter blends. Winter blended fuel will likely contain kerosene or 1-D fuel, which provide good cloud point temperatures but will result in a lighter fuel with a lower heat content. The use of such fuels is acceptable but may result in reduced engine power and/or fuel mileage.

(Rev. 2004) *All information subject to change without notice.*
6SE483 0401 Copyright © 2004 DETROIT DIESEL CORPORATION

5.1.6 Prohibited Fuel Additives

Used Lubricating Oil: Detroit Diesel specifically prohibits the use of drained lubricating oil in diesel fuel. Used lubricating oil contains combustion acids and particulate materials which erode injector components, resulting in loss of power and increased exhaust emissions. In addition, the use of drained lubricating oil will increase maintenance requirements due to filter plugging and combustion deposits. Refer to the section 5.1.6for recommendations on proper used oil disposal.

CAUTION:

To avoid injury from fire, keep all potential ignition sources away from diesel fuel, open flames, sparks, and electrical resistance heating elements. Do not smoke when refueling.

NOTE:
Do not add gasoline to diesel fuel.

Besides creating a serious fire hazard, the presence of gasoline in diesel fuel will reduce fuel cetane number and increase combustion temperatures. Tanks which contain such mixtures should be drained and cleaned as soon as possible.

Gasoline: The addition of gasoline to diesel fuel will create a serious fire hazard. The presence of gasoline in diesel fuel will reduce fuel cetane number and increase combustion temperatures. Tanks which contain such mixtures should be drained and cleaned as soon as possible.

 Copyright © 2004 DETROIT DIESEL CORPORATION

5.1.7 Waste Oil Disposal and Rerefined Oils

With over one billion gallons of waste oil generated annually in the U.S. alone, disposal of waste oil has become a serious environmental concern. Rerefining waste oils provides an environmentally viable way of handling this material. Detroit Diesel favors the recycling of waste oil and permits the use of rerefined oils in all engine product lines, provided the rerefined oil meets the SAE Viscosity and API specifications previously mentioned.

CAUTION:

To avoid injury from fire caused by heated lubricating-oil vapors:

- ☐ **Keep those people who are not directly involved in servicing away from the engine.**
- ☐ **Stop the engine immediately if an oil leak is detected.**
- ☐ **Do not allow open flames or smoke when working on an operating engine.**
- ☐ **Wear adequate protective clothing (face shield, insulated gloves, apron, etc.) to avoid burns.**
- ☐ **To prevent a buildup of potentially volatile vapors, keep the engine area well ventilated during operation.**

Lubricating oil is relatively harmless at ambient temperatures.

Consideration for the disposal of waste oil should begin when negotiating the purchase of new oil. Oil supplier selection criteria should include a proposal for handling waste oil. It is important to know exactly how the oil will be disposed of since it is the generator, not the hauler, that is ultimately responsible for its proper disposal.

(Rev. 2004) *All information subject to change without notice.*
6SE483 0401 Copyright © 2004 DETROIT DIESEL CORPORATION

5.1.8 Specifications for Natural Gas Engine

Listed in Table 5-4 are the natural gas specifications for Detroit Diesel engines.

Property	Limit	ASTM Test Method
Hydrocarbon MethaneEthane-PropaneC4 and Higher	mole percent88% Minimum6% max.1.7% max.0.3% max.	D 1945
Other Gaseous Species HydrogenCarbon dioxide + Nitrogen + OxygenOxygenCarbon Monoxide **Other Species** MethanolSulfur, Total	mole percent0.1% max.5.0% max.0.5% max.0.1% max.0% mass max.1.0 grains / 100 SCF, max.(32 ppm mass, max., ‖)	D 2650D1945D-1945D 2650No Test MethodASTM D 5504
Performance Related Properties Motor Octane NumberWobbe Number	115 Minimum1290-1380 BTU/SCF	*D 2623D 3588
Contaminates	†	
Pressure Water Dew PointTemperature, max.	‡	D 1142
Pressure Hydrocarbon DewPoint Temperature, max.	‡ Below which will form1% condensate	D 1142
Odorant	§	

* Test Method D 2623 was obsoleted by ASTM in 1991. Wobbe Index (WI), also known as Wobbe Number, is a measure of fuel energy flow rate through a fixed orifice under given inlet conditions. Numerically, WI= (dry, higher heating value)/ (Specific gravity).

† The compressed natural gas shall not contain dust, sand, dirt, gums, oils, or other substances in an amount sufficient to be injurious to the fuel station equipment or the vehicle being fueled.

‡ The water and hydrocarbon dew point at fuel pressure shall be at least 10°F below the 99.0% winter design temperature listed in Chapter 24, Table 1, Climatic Conditions for the United States, in American Society of Heating, Refrigerating and Air Conditioning Engineer's (ASHRAE) Handbook, 1989 fundamentals volume. Testing for water and hydrocarbon vapor shall be in accordance with ASTM D 1142, utilizing the Bureau of Mines apparatus.

§ The natural gas at ambient conditions must have a distinctive odor potent enough for its presence to be detected down to a concentration in air of 1% by volume. ‖ For Genset applications, when using fuel containing sulfur in excess of 16 ppm, the oil change interval must be reduced. Refer to Item 1 in the Lubrication and Preventive Maintenance Intervals sections.

Table 5-4 Natural Gas Specifications for Detroit Diesel Natural Gas Engines

 Copyright © 2004 DETROIT DIESEL CORPORATION

5.2 LUBRICATING OIL (DIESEL)

The selection of the proper lubricating oil is important for achieving the long and trouble-free service Detroit Diesel Series 60 engines are designed to provide. Only oils displaying the American Petroleum Institute (API) Symbol shown below are recommended. This symbol assures that the lubricant meets the minimum performance levels necessary for proper engine performance and durability.

5.2.1 Lubricant Requirement — All Diesel, Except Pleasure Craft Marine

Lubricants meeting these criteria have provided maximum engine life when used in conjunction with recommended oil drain and filter maintenance schedules. For the API symbol for this, see Figure 5-1.

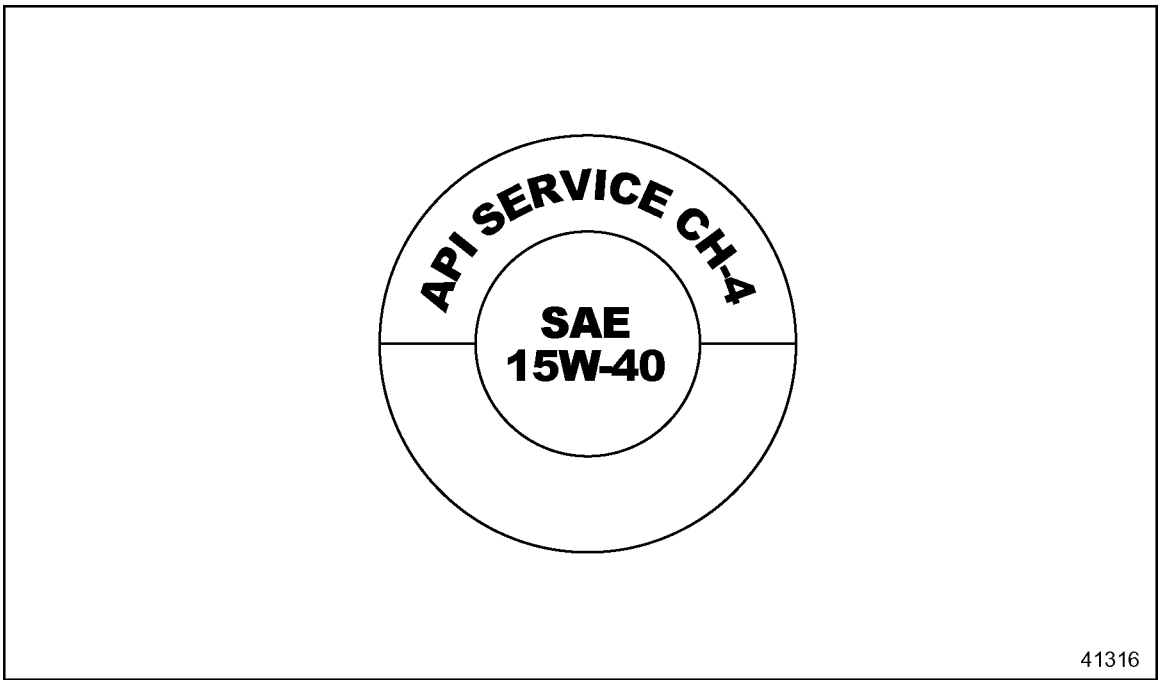

Figure 5-1 API Symbol

(Rev. 2004) *All information subject to change without notice.*
6SE483 0401 Copyright © 2004 DETROIT DIESEL CORPORATION

Lubricants meeting these criteria have provided maximum engine life when used in conjunction with specified oil drain and filter maintenance schedules. Only oils licensed by API may be used in Detroit Diesel engines. Lubricants meeting API Service category CH-4 are intended for use primarily with low (0.05%) sulfur fuel and may be used in all Detroit Diesel Series 60 engines.

API CG-4 and CF-4 oils may be used when CH-4 oils are not available; however, their use may require a reduction in oil drain interval depending upon the application and the fuel sulfur level.

At ambient temperatures below -20°C (-4°F) when sufficient starter speed cannot be achieved with SAE 15W-40 oils, the use of 5W-XX and 10W-XX oils, where XX is 30 or 40, may be used to improve startability provided they are API CH-4 and have demonstrated field performance in DDC engines. These oils must possess a HT/HS of 3.7 minimum.

When the use of high sulfur fuel (greater than 0.5% mass sulfur) is unavoidable, higher alkalinity lubricants are recommended. High sulfur fuels require modification to oil drain intervals. For further information refer to the section titled "The Use of High Sulfur Fuels."

 Copyright © 2004 DETROIT DIESEL CORPORATION

5.2.2 Lubricant Requirement — Heat Exchanger-Cooled Pleasure Craft Marine

Lubricants meeting these criteria have provided maximum engine life when used in conjunction with recommended oil drain and filter maintenance schedules. For the API symbol for this, see Figure 5-2.

NOTICE:
Use only 15W-40 lubricating oil in Series 60 pleasure craft marine engines.

Figure 5-2 API Symbol—Heat Exchanger-Cooled Pleasure Craft Marine

Lubricants meeting these criteria have provided maximum engine life when used in conjunction with specified oil drain and filter maintenance schedules. Only oils licensed by API may be used in Detroit Diesel engines. Lubricants meeting API Service category CH-4 are intended for use primarily with low (0.05%) sulfur fuel and should be used in Detroit Diesel Series 60 pleasure craft marine engines.

(Rev. 2004) *All information subject to change without notice.*
6SE483 0401 Copyright © 2004 DETROIT DIESEL CORPORATION

5.2.3 Oil Change Interval

The length of time an engine may operate before changing oil depends on the lubricant and fuel used, engine oil consumption, and operating cycle. The maximum interval the engine may operate before changing oil is listed in Table 5-5. Oil analysis may be used to determine whether this interval should be shorter, but should not be used to lengthen the interval.

Application	Oil Drain Schedule
Highway Truck and Motor Coach†	15,000 miles (24,000 km)
City Transit Coach, Pick-up and Delivery, Stop-and-Go, Short Trip†	6,000 Miles (9,600 km), 300 hours, or 3 months*
Fire Fighting, Crash/Rescue, and Emergency Vehicle	6,000 Miles (9,600 km), 300 hours, or 1 year*
Industrial and Agricultural	250 hours or 1 year*
Stationary Generator, Prine Power or Continuous	250 hours or 3 months*
Stationary Generator, Standby	150 hours or 1 year*

Note: Change both full-flow filters when lube oil is changed.

*Whichever comes first.

†Drain intervals shown apply to pre-1998 model year engines. 1998 and newer engines may require a modification to these intervals based on used oil analysis. Refer to publication "Lubricating Oil, Fuel, and Filters", form 7SE270 (9901), available from authorized Detroit Diesel distributors.

Table 5-5 Maximum Oil Drain Intervals

NOTE:
The use of fuels with sulfur content above 0.5% will require a shorter drain interval, and/or the use of a higher TBN oil. Refer to DDC Publication 7SE270, Lubricating Oil, Fuel, and Filter Recommendations, for details.

Extending Oil Drain Intervals: Some oil companies may promote engine lubricants with a claimed useful life that would allow customers following certain maintenance and operating parameters to elect to extend oil drain intervals beyond the recommended periods. The ability of such lubricants to maintain their protective qualities over a longer period and the acceptability of maintenance and operating parameters must be established by the oil company and the customer. Claims for engine failure attributable to the inadequacy of the lubricant are not covered under the terms of the engine's limited warranty.

 Copyright © 2004 DETROIT DIESEL CORPORATION

5.2.4 Statement of Policy on Supplemental Fuel and Lubricant Additives

The Series 60 engine will operate satisfactorily on the commercial fuels and lubricants of good quality regularly provided by the petroleum industry through retail outlets.

Supplementary additives include all products marketed as fuel conditioner, smoke suppressants, masking agents, deodorants, tune-up compounds, top oils, break-in oils, graphitizers, and friction-reducing compounds. The regular and continued use of supplementary additives in fuels and lubricants is not recommended.

NOTE:
DDC is not responsible for the cost of maintenance or repairs due to lack of required maintenance services performed or the failure to use fuel, oil, lubricants and coolant meeting DDC-recommended specifications. Performance of required maintenance and use of proper fuel, oil, lubricants and coolant are the responsibility of the owner. See the OEM's guidelines for details.

5.2.5 Filter Selection and Change Intervals for Series 60 Engine

The engine oil and fuel filters recommended for use on the Series 60 engine are as follows:

- ☐ Engine Oil Filter:
  - ☐ Full Flow - DDC Part No. 23527033
  - ☐ Single full flow, large diameter, high capacity — DDC Part No. 5361840001
- ☐ Fuel Filters, Spin-on:
  - ☐ Primary- DDC Part No. 23518481
  - ☐ Primary w/Separator - DDC Part No. 23512317
  - ☐ Primary w/Separator - DDC Part No. 23514654*
  - ☐ Secondary- DDC Part No. 23518482
- ☐ Fuel Filters, Fuel Pro®:
  - ☐ Fuel Pro 321 - DDC Part No. 23518482
  - ☐ Fuel Pro 380, 380E - DDC Part No. 23521528
- ☐ Fuel Filters, Sea Pro®:
  - ☐ Sea Pro 150 or 300 - DDC Part No. 23518168 (30 micron)
  - ☐ Sea Pro 152 or 511 - DDC Part No. 23521528

*Requires installation of reusable plastic bowl.

Fuel Pro® and Sea Pro® are registered trademarks of Davco Manufacturing, L.L.C.

(Rev. 2004) *All information subject to change without notice.*
6SE483 0401 Copyright © 2004 DETROIT DIESEL CORPORATION

The change intervals for oil and fuel filters are listed in Table 5-6.

Application	Replacement Intervals (Fuel Sulfur Content Less Than 0.5 wt.%)
Highway Truck and Motor Coach†	15,000 Miles (24,000 Km)
City Transit Coach†	6,000 Miles (9,600 Km), 300 hours or 3 months*
Fire Fighting Apparatus, Emergency Vehicles	6,000 Miles (9,600 Km), 300 hours, or 1 year*
Industrial, Agricultural, and Marine	250 hours or 1 year*
Stationary Electrical Generator Sets, Continuous	250 hours or 3 months*
Stationary Electrical Generator Sets, Standby	150 hours or 1 year*

* Whichever comes first.

†Drain intervals shown apply to pre-1998 model year engines. 1998 and newer engines may require a modification to these intervals based on used oil analysis. Refer to publication "Lubricating Oil, Fuel, and Filters", form 7SE270 (9901), available from authorized Detroit Diesel distributors.

Table 5-6 Maximum Lubricating Oil and Fuel Filter Replacement Intervals

NOTE:
The spin-on fuel filter replacement intervals listed in Table 5-5 do not apply to Fuel Pro filter elements, which must be replaced when the fuel level in the see-through cover reaches the top of the element or after one year of service, whichever comes first.

 Copyright © 2004 DETROIT DIESEL CORPORATION

5.2.6 Used Lubricating Oil Analysis Guidelines

These values indicate the need for an immediate oil change, but do not necessarily indicate internal engine problems requiring engine teardown. Characteristics relating to lubricating oil dilution should trigger corrective action to identify and find the source(s) of leaks, if the values listed in Table 5-7 are realized. Contact your DDC distributor or dealer regarding oil analysis services.

Warning Limits	ASTM Designation	Condition Measured	Series 60 Limit
Viscosity at 40 °C cS Maximum Increase-% Maximum Decrease-%	D-445	Engine & Oil	40.0 15.0
Carbon (Soot) Content, Maximum - Mass %	E-1131 or LEM℠*	Engine Combustion	1.5
Pentane Insolubles - Mass %	D-893	Engine Combustion	1.0
Total Base Number (TBN) Minimum	D 4739D 2896	Oil	1.0 2.0
Water Content (Dilution), Maximum - Vol. %	D 1744	Engine	0.30
Fuel Vol., % Maximum	D 3524	Engine	2.5
Antifreeze Maximum	D2982	Engine	Neg.
Iron Content, Maximum - ppm (Fe)	D 5185	Engine Wear	150
Copper Content, Maximum - ppm (Cu)	D 5185	Engine Wear	30

* LEM℠ is a patented soot measurement process by Analysts, Inc.

NOTE: These limits are intended to be used for guidance when a single oil sample is tested. Actual limits are dependent on engine, application, and oil type. Refer to DDC Publication 7SE398 to determine the warning limits specific to your application.

Table 5-7 Used Lubricating Oil Analysis Guidelines for Immediate Oil Change

5.2.7 Miscellaneous Fuel and Lubricant Information

A list of "brand" name lubricants distributed by the majority of worldwide oil suppliers can be purchased from the Engine Manufacturers Association (EMA). The publication is titled *EMA Lubricating Oils Data Book for Heavy-Duty Automotive and Industrial Engines*. The publication shows the brand names, oil performance levels, viscosity grades, and sulfated ash contents of most "brands" marketed.

ENGINE MANUFACTURERS ASSOCIATION

401 NORTH MICHIGAN AVE.

CHICAGO, ILLINOIS 60611-4267

(Rev. 2004) *All information subject to change without notice.*
6SE483 0401 Copyright © 2004 DETROIT DIESEL CORPORATION

5.3 LUBRICATING OIL FOR THE SERIES 60G ENGINE

Lubricants formulated for use in natural gas fueled engines must provide adequate engine lubrication, minimal thermal degradation, and good deposit control. Currently there is not an API category for natural gas engine oils. Therefore, selection of the proper engine oil is limited to the two lubricants listed in Table 5-8. These oils have demonstrated adequate performance in these engines.

Viscosity Grade, SAE	15W40
Sulfated Ash Content, % max.	0.50%
Phosphorous, ppm max.	800 ppm max.

Table 5-8 Series 60G Engine Lubricating Oil Specifications

While Detroit Diesel does not maintain an approved list for these lubricants, other lubricants may be selected by the customer provided the oil supplier can demonstrate equivalent performance with the two oils identified. Detroit Diesel will not determine this equivalency.

 Copyright © 2004 DETROIT DIESEL CORPORATION

5.3.1 Oil Change Intervals for Series 60 Natural Gas Engine

During engine operation, lubricating oil deteriorates due to combustion by-products and contamination. Oil change intervals may vary depending on engine operation, fuel quality, and lubricant quality. The oil drain intervals are listed in Table 5-9 and listed in Table 5-10.

Application	Oil Drain Interval
City Transit Coach	6,000 miles (9,600 km) or 3 months*
Pick-up and Delivery Stop and Go	6,000 miles (9,600 km) or 3 months*

* Whichever comes first.

Table 5-9 Maximum Recommended Oil Drain Intervals (Normal Operation) for Series 60 Diesel Engine

Application	Oil Drain Interval
Stand-by Continuous/Prime	250 hours or 12 months* 250 hours or 3 months*
Stand-by † Continuous/Prime †	200 hours or 6 months* 200 hours or 3 months*
Stand-by ‡ Continuous/Prime ‡	150 hours or 3 months* 150 hours or 3 months*

† Fuel with total sulfur greater than 17 ppm, but less than 24 ppm.

‡ Fuel with total sulfur greater than 24 ppm, but less than 32 ppm.

* Whichever comes first.

Table 5-10 Series 60 Natural Gas Generator Set Engine

NOTE:
Operation with fuels having total sulfur greater than 32 ppm, on a mass basis, may result in engine damage, and is not recommended by Detroit Diesel Corporation.

(Rev. 2004) *All information subject to change without notice.*
6SE483 0401 Copyright © 2004 DETROIT DIESEL CORPORATION

5.3.2 Used Lubricating Oil Analysis for the Series 60G Engine

A used lubricating oil analysis, such as Detroit Diesel's "Power Trac," is recommended for monitoring crankcase oil in all engines. The application of used engine oil analysis to natural gas fueled engines can help to identify contamination from excessive wear metals and foreign substances and monitor oil degradation through oxidation. If any abnormal conditions are identified, the oil should be changed immediately. Warning limits are listed in Table 5-11.

Viscosity Increase, % from new, max. (ASTM D 445) Kinematic @ 100_C	**10%**
Total Base Number decrease, max. (ASTD D 4739)	3
Total Acid Number increase, max. (ASTM D 664)	2
Iron Content, ppm	150 max.
Oxidation/Nitration, Infrared Spectroscopy	25 absorbance units

Table 5-11 Used Oil Analysis Warning Limits for Series 60G Engine

 Copyright © 2004 DETROIT DIESEL CORPORATION

5.4 COOLANT

The coolant provides a medium for heat transfer and controls the internal temperature of the engine during operation. In an engine having proper coolant flow, some of the heat of combustion is conveyed through the cylinder walls and the cylinder head into the coolant. Without adequate coolant, normal heat transfer cannot take place within the engine, and engine temperature rapidly rises. Therefore, coolant must be carefully selected and properly maintained.

The following terms are used throughout this section and must be understood.

- ☐ Coolant - The fluid mixture circulating in the engine cooling system.
- ☐ IEG - Full strength (non-diluted) Inhibited Ethylene Glycol meeting applicable heavy-duty formulation specifications.
- ☐ IPG - Full strength (non-diluted) Inhibited Propylene Glycol meeting applicable heavy-duty formulation specifications.
- ☐ SCA - Supplemental Coolant Additives. Used to prevent corrosion, cavitation, and the formation of deposits.
- ☐ Initial fill - Any time the cooling system is empty, then filled with new coolant.
- ☐ Precharged IEG - Also referred to as a fully formulated IEG. Contains the proper amount of SCA. Additional SCA must not be used with a precharged IEG at initial fill.
- ☐ Precharged IPG - Also referred to as a fully formulated IPG. Contains the proper amount of SCA. Additional SCA must not be used with a precharged IPG at initial fill.
- ☐ Dropout - Sludge or deposit formation in or on cooling system components.

Using a coolant with the appropriate concentrations of SCA is one of the most important aspects of quality engine maintenance. To achieve the chemical balance needed to protect a cooling system, certain coolant basics must be understood.

This section provides the directions and information required to ensure cooling system protection for Detroit Diesel Series 60 engines. These recommendations are general rules and reflect the current technology. Specific concerns not covered should be addressed to your local Detroit Diesel representative.

The coolant used in Detroit Diesel Series 60 engines must meet the following basic requirements:

- ☐ Provide an adequate heat transfer medium.
- ☐ Protect against cavitation damage.
- ☐ Provide a corrosion/erosion-resistant environment.
- ☐ Prevent formation of scale or sludge deposits.
- ☐ Be compatible with cooling system hose and seal materials.
- ☐ Provide adequate freeze protection.

A properly maintained coolant can be used up to the intervals listed in Table 5-22. At this time the cooling system must be drained, thoroughly cleaned and filled with new coolant.

To achieve these requirements, coolants are mixtures of good quality water, SCA and often an IEG or IPG for freeze protection. The rest of this bulletin will describe the requirements and usage of the water, SCA, IEG, and IPG.

(Rev. 2004) *All information subject to change without notice.*
6SE483 0401 Copyright © 2004 DETROIT DIESEL CORPORATION

5.4.1 Water

Water is the best practical medium for heat transfer. However, water alone can cause corrosion and inherently contains minerals that can produce scale deposits on internal cooling system surfaces. Chlorides, sulfates, magnesium, and calcium dissolved in the water can cause scale deposits, sludge deposits and/or corrosion.

Distilled or deionized water is preferred to minimize the adverse effects of minerals in water. The maximum allowable limits for minerals in water are listed in Table 5-12. For the procedure for evaluating the quality of water, see Figure 5-3.

Mineral	Limit - ppm	Limit - grains per gallon
Chlorides	40	2.5
Sulfates	100	5.8
Total dissolved solids	340	20
Total Hardness: Magnesium & Calcium	170	10

Table 5-12 Maximum Allowable Limits for Minerals in Water

 Copyright © 2004 DETROIT DIESEL CORPORATION

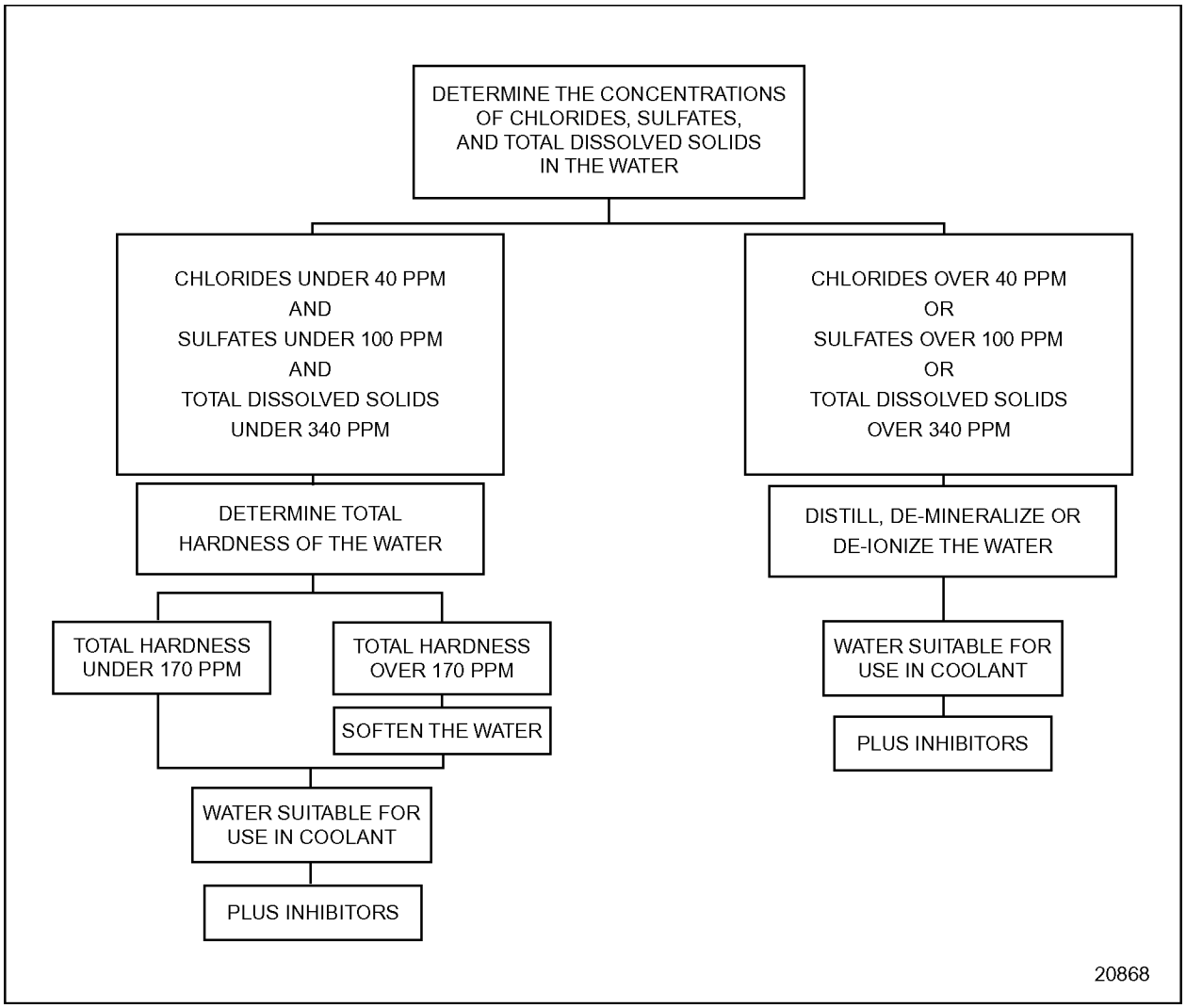

Figure 5-3 Water Evaluation Procedure

(Rev. 2004) *All information subject to change without notice.*
6SE483 0401 Copyright © 2004 DETROIT DIESEL CORPORATION

5.4.1.1 Antifreeze, Inhibited Ethylene Glycol

Ethylene glycol is used for freeze protection of the coolant. IEG, commonly referred to as antifreeze, also contains chemicals that provide a limited protection against corrosion. The use of an IEG product with a low silicate formulation that meets either the GM 6038-M formulation (GM1899-M performance) or ASTM D 4985 requirements is recommended.

5.4.1.2 Antifreeze, Inhibited Propylene Glycol

An IPG/water mixture provides freeze protection.

Propylene glycol must meet the performance requirements of ASTM D 4985 and the physical/chemical requirements of ASTM D5216. The maintenance procedures for propylene glycol are the same as for IEG. All references to IEG will also apply to IPG for the Series 60 engines.

For best overall performance, a 50% concentration of IEG (1/2 IEG, 1/2 water) is recommended. An IEG concentration over 67% (2/3 IEG, 1/3 water) is not recommended because of poor heat transfer, reduced freeze protection, and possible silicate dropout. An IEG concentration below 33% (1/3 IEG, 2/3 water) offers little freeze or corrosion protection and is not recommended (see Figure 5-4, see Figure 5-5, and see Figure 5-6).

IEG coolants require the addition of SCA to provide cooling system corrosion and deposit protection. The SCA added should match the chemistry of the additive package included in the coolant. If this precaution is not observed, coolant monitoring can become difficult, making over-inhibiting more likely. IEG formulations available in the market may contain from zero to the full amount of the required SCA. A basic IEG with no SCA must have additional SCA added at the time of initial fill. A Fully Formulated or Precharged IEG such as Detroit Diesel Power Cool® already contains the required SCA (listed in Table 5-13). Overconcentration will result if SCAs are added to a fully formulated IEG coolant at the time of initial fill. This can result in solids dropout and the formation of deposits.

Power Cool - DDC Part Number	Size
23512138	1 gallon
23512139	55 gallons
23512140	bulk

Table 5-13 Power Cool Fully Formulated/Precharged IEG

 Copyright © 2004 DETROIT DIESEL CORPORATION

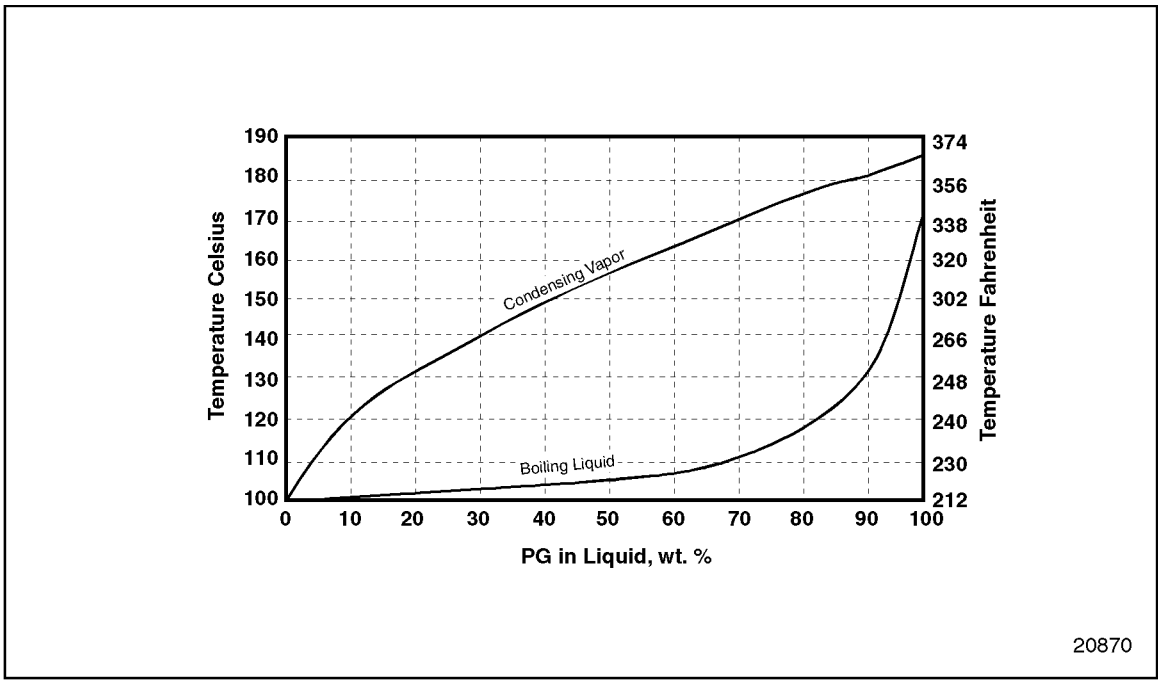

Figure 5-4 IPG Boiling Point

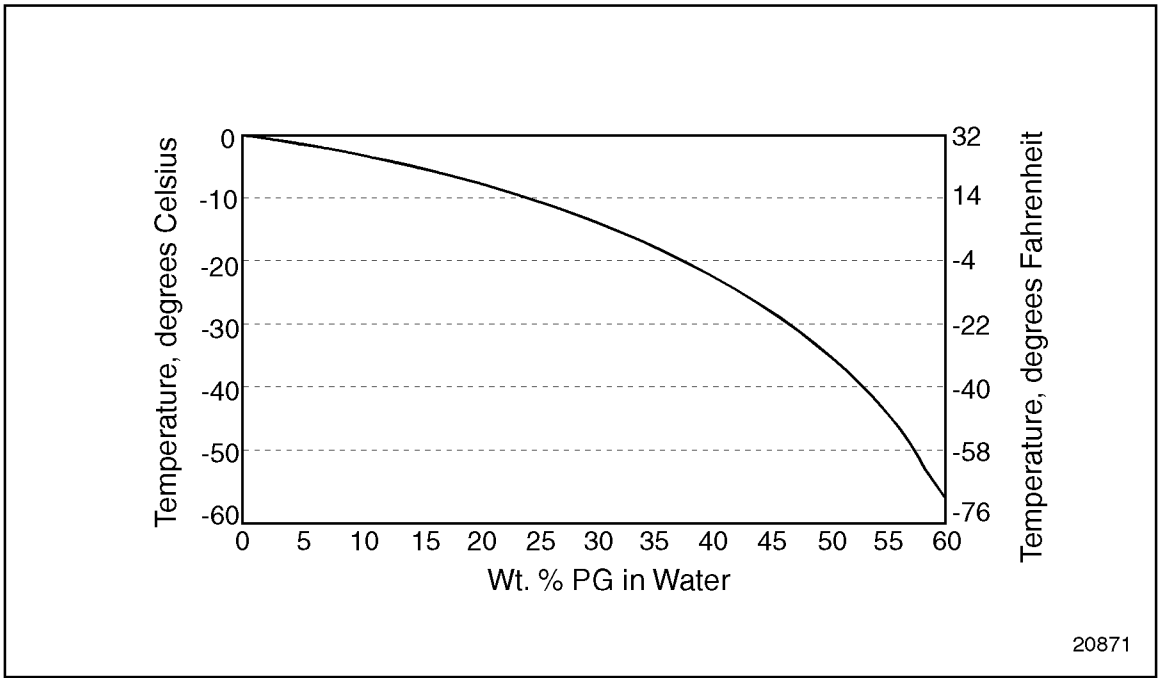

Figure 5-5 IPG Freezing Point

(Rev. 2004) *All information subject to change without notice.*
6SE483 0401 Copyright © 2004 DETROIT DIESEL CORPORATION

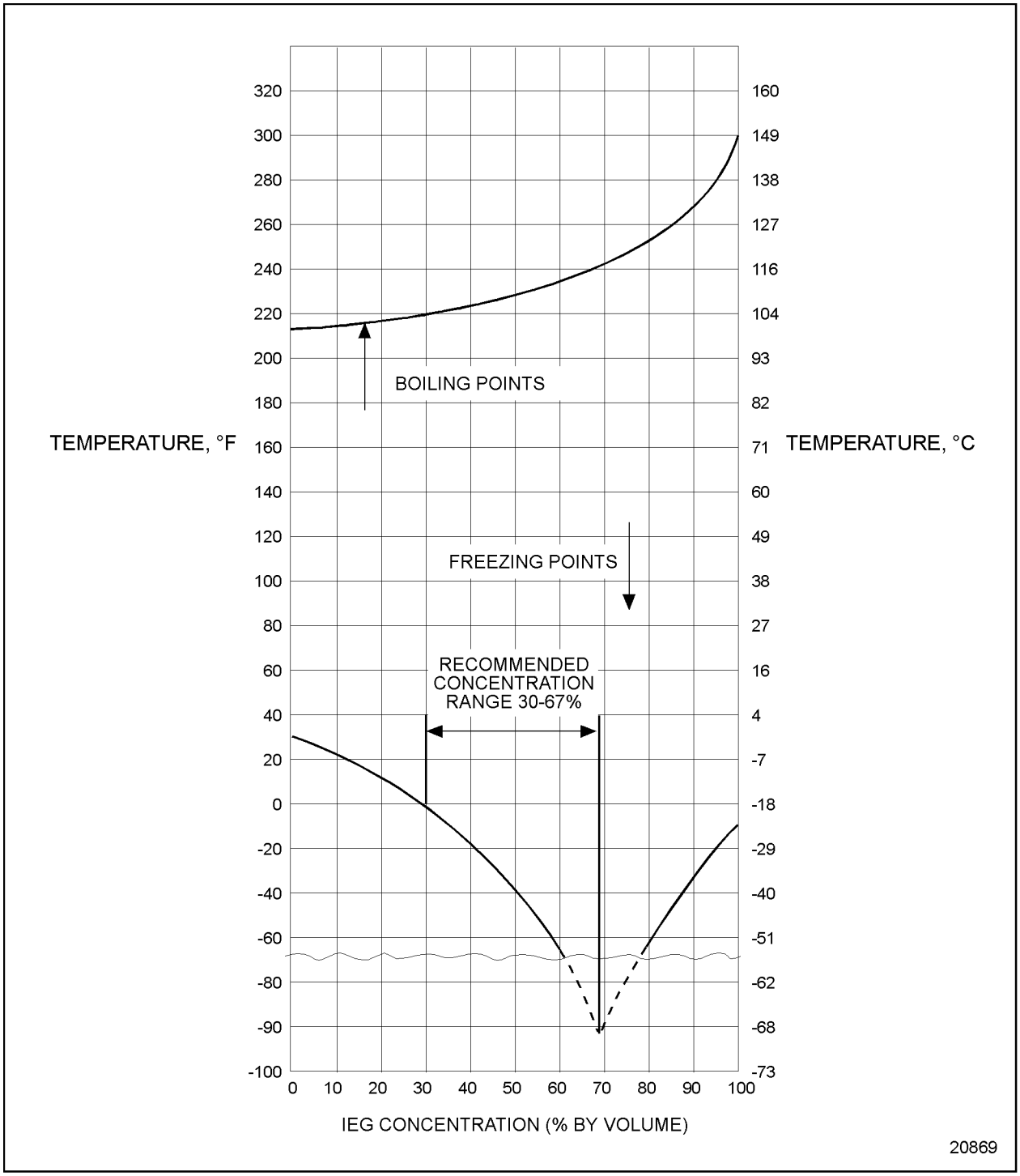

Figure 5-6 **Coolant Freezing and Boiling Temperature vs. Inhibited Ethylene Glycol Concentration (Sea Level)**

 Copyright © 2004 DETROIT DIESEL CORPORATION

5.4.2 Coolants Not Recommended

Methyl alcohol-based antifreeze should not be used in Detroit Diesel Series 60 engines because of its effect on the non-metallic components of the cooling system and its low boiling point. Similarly, methoxy propanol-based antifreeze should not be used in Detroit Diesel Series 60 engines because it is not compatible with fluoroelastomer seals found in the cooling system. Glycol-based coolants formulated for heating/ventilation/air conditioning (HVAC) should not be used in Detroit Diesel Series 60 engines. These coolants generally contain high levels of phosphates, that can deposit on hot internal engine surfaces and reduce heat transfer.

5.4.3 Supplemental Coolant Additive

SCAs provide protection for the cooling system components. The coolant must have the proper concentration of SCAs. Detroit Diesel Maintenance products are recommended for use in Detroit Diesel Series 60 engines.

NOTICE:

Excessive amounts of chemicals in the engine coolant can cause a gel-type or crystalline deposit that reduces heat transfer and coolant flow. The deposit, called dropout takes the color of the coolant when wet, but appears as a white powder when dry. It can pick up solid particles in the coolant and become gritty, causing excessive wear of water pump seals and other cooling system components. The wet gel can be removed by non-acid (alkali) type heavy-duty cleaner, Detroit Diesel Maintenance Product cleaner DD-2001 (sodium nitrite/sodium tetraborate). If the gel is allowed to dry, it is necessary to disassemble the engine and clean with a caustic solution or mechanically clean individual components.

The proper application of SCA will provide:

- ☐ A pH control to prevent corrosion.
- ☐ Water-softening to deter formation of mineral deposits.
- ☐ Cavitation protection to reduce the effects of cavitation.

(Rev. 2004) *All information subject to change without notice.*
6SE483 0401 Copyright © 2004 DETROIT DIESEL CORPORATION

The proper dosage for initial cooling system fill is listed in Table 5-14. Maintenance cooling system fill is listed in Table 5-15, initial coolant inhibitor element size requirements for IPG and IEG plus water coolant mixtures are listed in Table 5-16. Coolant inhibitor element size requirements, initial dosage for water-only systems, are listed in Table 5-17. The proper maintenance dosages are listed in Table 5-18.

Coolant	Coolant Element	Liquid *
Precharged IEG and Water	NONE	NONE
IEG and Water	Select Element listed in Table 5-16.	3% by volume, or 1 pint per 4 gallons
Water only	Select Element listed in Table 5-17.	6% by volume, or 1 quart per 4 gallons

*1 gallon = 3.785 L; 2 pints = 1 quart; 4 quarts = 1 gallon

Table 5-14 Initial Fill SCA Dosage

Coolant Element	Liquid *
Select element listed in Table 5-18.	0.6% by volume or 1 pint per 20 gallons

*1 gallon = 3.785 L; 8 pints = gallon

Table 5-15 Maintenance Fill SCA Dosage

Cooling System Capacity, Gallons (L)	Quantity	DDC Part Number
9-12 (34-45)	1	23508426
13-16 (49-61)	1	23507189

Table 5-16 Coolant Inhibitor Element Size Requirements-Initial Fill Dosage for IEG or IPG plus Water Coolant Mixtures

Cooling System Capacity Gallons (L)	SCA Element Quantity	Detroit Diesel SCA Element Part Number	Additional SCA Liquid Required
7 (26)	1	23508426	None
10 (38)	1	23507189	None
15 (57)	2	23508426	None

Table 5-17 Coolant Inhibitor Element Size Requirements-Initial Dosage for Water-Only System

 Copyright © 2004 DETROIT DIESEL CORPORATION

Cooling System Capacity, Gallons (L)	Fiter Quantity	Filter Part Number	Liquid Only Number of Pints
9-12 (34-45)	1	23507545	1/2 - 3/4
13-16 (49-61)	1	23507545	3/4 - 1

Table 5-18 Coolant Inhibitor Element Size Requirements-Maintenance Dosage for IEG, IPG, Precharged, and Water-Only Coolant Mixture

The concentration of SCA will gradually deplete during normal engine operation. Check the SCA concentration at the regular intervals listed in Table 5-19. Additional SCA must be added to the coolant when it becomes depleted below a specified level (listed in Table 5-20). Maintenance dosage of SCA must only be added if nitrite concentration is less than 800 ppm. If nitrite concentration is greater than 800 ppm, do not add additional SCA. Due to the elevated fire deck temperatures in the Series 60G engine, it is very important that the phosphorus (P) level remain below the maximum. Operation of the Series 60G engine with phosphorus levels above the maximum will lead to phosphorus dropout on the hot firedeck surfaces. This dropout will form an insulation layer between the fire deck and coolant, and lead to eventual engine damage.

Service Application	Inhibitor Test Interval
On-highway Trucks and Motor Coaches	205,000 miles (32,000 km)
City Transit Coaches, Pick-up and Delivery, Short Trip, and Emergency Vehicles	6,000 miles (9,600 km) or three months, whichever comes first.
Industrial, Continuous Duty Generator Set, Marine and all other applications	500 hours or yearly, whichever comes first.
Standby Generator Set	200 hours or yearly, whichever comes first.

Table 5-19 Required Coolant Inhibitor Test Intervals

SCA	Minimum SCA ppm	Maximum SCA ppm
Boron (B)	1,000	1,500
Nitrite (NO_2)	800	2,400
Nitrates (NO_3)	1,000	2,000
Silicon (Si)	50	250
Phosphorus (P)	0	500
pH	8.5	10.5

Table 5-20 SCA Limits with GM6038-M or ASTM-D 4985 (50/50 Coolant/Water Mixture)

(Rev. 2004) *All information subject to change without notice.*
6SE483 0401 Copyright © 2004 DETROIT DIESEL CORPORATION

5.4.4 Soluble Oils

Soluble oil additives are not approved for use in the Detroit Diesel Series 60 engine cooling systems. A small amount of oil adversely affects heat transfer. A 1.25% concentration of soluble oil increases the fire deck temperature 6%. A 2.50% concentration increases the fire deck temperature 15%.

5.4.5 Chromate

Chromate additives are not approved for use in the Detroit Diesel Series 60 engine cooling systems. Chromate additives can form chromium hydroxide, commonly called green slime. This, in turn, can result in engine damage due to poor heat transfer. Cooling systems operated with chromate-inhibited coolant must be chemically cleaned with Power Cool 2015 cooling system cleaner and conditioner (or equivalent sulfamic acid/sodium carbonate cleaner) and flushed.

Some coolant filter elements with magnesium internal support plates have caused engine damage. The coolant dissolves the magnesium and deposits it on the hot zones of the engine where heat transfer is most critical. The use of elements with these plates is not approved.

5.4.6 Detroit Diesel Cooling System Maintenance Products

Detroit Diesel Maintenance Products with SCA are water-soluble chemical compounds. These products are available in coolant filter elements, liquid packages, and a fully formulated IEG.

5.4.7 Coolant Inhibitor Elements

Replaceable coolant inhibitor elements (spin-on canisters) are available in various sizes suitable for cooling systems of varying capacity. If a fully formulated IEG or IPG coolant *is not* used, a pre-charge element *must*be installed. Selection of the proper element size is vital when precharging the coolant system at initial fill. If a coolant inhibitor element is used, it is important to make sure that the coolant inlet/outlet valves on the element adaptor head are fully opened prior to filling the cooling system with coolant.

NOTE:
A fully formulated IEG or IPG must NOT have SCA added at initial fill.

The need for maintenance elements is determined by the results of the SCA concentration test performed at each cooling system service interval.

5.4.8 Supplemental Coolant Additive Test Procedures

Nitrite concentration is an indication of the SCA concentration in the coolant. Nitrite test kits and test strips are commercially available. The coolant must be tested for required inhibitor levels at the intervals listed in Table 5-19. SCA levels must be within the ranges listed in Table 5-20.

 Copyright © 2004 DETROIT DIESEL CORPORATION

5.4.8.1 Liquid Supplemental Coolant Additive

Detroit Diesel Cooling System Maintenance Procedures SCA and Cleaners are available in liquid form and are listed in Table 5-21.

Product	Size *	DDC Part No.
Power Cool 2000 - Liquid SCA	1 pint (12 per case)	23507858
Power Cool 2000 - Liquid SCA	half gallon (6 per case)	23507859
Power Cool 2000 - Liquid SCA	5 gallons	23507860
Power Cool 2000 - Liquid SCA	55 gallons	23507861
Power Cool 3000 † - Liquid SCA	1 pint (12 per case)	23507854
Power Cool 3000 † - Liquid SCA	half gallon (6 per case)	23507855
Power Cool 3000 † - Liquid SCA	5 gallons	23507856
Power Cool 3000 † - Liquid SCA	55 gallons	23507857
Power Cool 2001 ON-LINE CLEANER	half gallon (6 per case)	23507862
Power Cool 2001 ON-LINE CLEANER	5 gallons	23507863
Power Cool 2001 ON-LINE CLEANER	55 gallons	23507864
Power Cool 2015, Twin Pac, Dry Chemical Cleaner/Conditioner	2 per case	23507867

* 1 gallon = 3.785 L; 8 pints = gallon

† Power Cool 3000 is more compatible with hard water than Power Cool 2000. Use Power Cool on-line cleaner for light deposits. Use Power Cool dry chemical cleaner conditioner for heavy deposits or scale.

Table 5-21 Liquid SCA and Additional Coolant Treatment Products

(Rev. 2004) *All information subject to change without notice.*
6SE483 0401 Copyright © 2004 DETROIT DIESEL CORPORATION

5.4.8.2 Test Kit Procedures

Use Detroit Diesel Powertrac® 2-Way Coolant Test Strips (part number 23515917) to measure nitrite and glycol concentrations. Cavitation/corrosion protection is indicated on the strip by the level of nitrite concentration.

NOTICE:

Do not use Detroit Diesel **Power Cool™** test strips to determine the inhibitor levels of coolant with non-DDC approved additive packages. Incompatible chemicals and variance in inhibitor levels in the additive packages may cause inaccurate interpretation of test strip readings. This can lead to under-inhibiting the coolant, which may result in cavitation erosion.

Freeze and boil over protection is determined by glycol concentration. Use the test strips as follows:

1. Dip the strip into coolant for one second. Remove and shake briskly to eliminate excess fluid.
2. Immediately compare end pad (% glycol) to the color chart.
3. Sixty seconds (one minute) after dipping, compare the nitrite pad to the chart contained within the kit.

For best results make the tests while the coolant is between 50 and 140°F (10 - 60°C). Wait at least 60, but not longer than 75 seconds before reading the nitrite level. Promptly replace and tighten container cap after each use. Discard unused strips if they have turned light pink or tan.

A factory coolant analysis program is also available through authorized Detroit Diesel service outlets under part number 23508774.

 Copyright © 2004 DETROIT DIESEL CORPORATION

5.4.9 Summary of Coolant Recommendations

Coolant recommendations may be summarized as follows:

CAUTION:

To avoid injury from the expulsion of hot coolant, never remove the cooling system pressure cap while the engine is at operating temperature. Remove the cap slowly to relieve pressure. Wear adequate protective clothing (face shield or safety goggles, rubber gloves, apron, and boots).

NOTE:
Propylene glycol meeting ASTM D 4985, and ASTM D 5216, is approved for use in Series 60 engines.

1. Always maintain the engine coolant to meet Detroit Diesel specifications.
2. Only use water that meets Detroit Diesel specifications. Distilled or deionized water is preferred.
3. The proper dosage of SCA must be included in the coolant at initial fill for all Detroit Diesel Series 60 engines.This dosage can be either included in part or entirely in the IEG used, or it may need to be added. Dosage is also dependent on whether water or IEG is used. The user is urged to refer to the full text of this bulletin to determine the proper dosage. Mixing of different manufacturers' inhibitors (SCAs) could cause cooling system problems.
4. Maintain the SCA to the prescribed concentration. Test the nitrite concentration by using a titration kit or Detroit Diesel 2-Way Coolant Test Strips. Add SCA only if the nitrite concentration is below 800 ppm.Do not use another manufacturer's test kit to measure the SCA concentration of Detroit Diesel Maintenance Products.
5. Pre-mix coolant makeup solutions at the proper concentration before adding to the coolant system.
6. Where antifreeze/boilover protection is required, use only ethylene glycol coolant (low silicate formulation) meeting GM 6038-M, GM 1899-M, or ASTM D 4985. Propylene glycol meeting ASTM D 4985, and ASTM D 5216 is also approved for use in Series 60 engines.
7. Always maintain proper coolant level.
8. A properly maintained cooling system can be operated for up to intervals listed in Table 5-22, listed in Table 5-23 and listed in Table 5-24. The cooling system must be thoroughly cleaned and the coolant replaced at these intervals.

(Rev. 2004) *All information subject to change without notice.*
6SE483 0401 Copyright © 2004 DETROIT DIESEL CORPORATION

Coolant	Interval - Whichever comes first	Action
Antifreeze/Water + SCA Inhibitor (DDC *Power Cool*)	**A**20,000 miles (32,000 km) or 3 months **B**3 months or 500 hours	Test nitrite concentration with test strip. Add SCA or dilute coolant as needed.
	A300,000 miles (480,000 km) **B**2 years or 4,000 hours	Drain and clean system. Replace with new coolant.
Ethylene Glycol Antifreeze/Water + SCA Inhibitor	**A**20,000 miles (32,000 km) or 3 months **B**3 months or 500 hours	Test nitrite concentration with test strip. Add SCA or dilute coolant as needed.
	A300,000 miles (480,000 km) **B**2 years or 4,000 hours	Drain and clean system. Replace with new coolant.
Propylene Glycol Antifreeze/Water + SCA Inhibitor	**A**20,000 miles (32,000 km) or 3 months **B**3 months or 500 hours	Test nitrite concentration with test strip. Add SCA or dilute coolant as needed.
	A300,000 miles (480,000 km) **B**2 years or 4,000 hours	Drain and clean system. Replace with new coolant.
Ethylene Glycol Antifreeze/Water + NOAT Inhibitor	**A**300,000 miles (480,000 km) or 2 years **B**5,000 hours	Add *Power Cool* Plus Extender
	A600,000 miles (960,000 km) **B**4 years or 10,000 hours	Drain and clean system. Replace with new coolant.
Propylene Glycol Antifreeze/Water + NOAT Inhibitor	**A**300,000 miles (480,000 km) or 2 years **B**5,000 hours	Add *Power Cool* Plus Extender
	A600,000 miles (960,000 km) **B**4 years or 10,000 hours	Drain and clean system. Replace with new coolant.
Water only+ SCA Inhibitor	**A**20,000 miles (32,000 km) or 3 months **B**3 months or 500 hours	Test nitrite concentration with test strip. Add SCA or dilute coolant as needed.
	A300,000 miles (480,000 km) **B**2 years or 4,000 hours	Drain and clean system. Replace with new coolant.
Water only+ NOAT Inhibitor	**A**300,000 miles (480,000 km) or 2 years **B**2 years or 5,000 hours	Add *Power Cool* Plus Extender
	A600,000 miles (960,000 km) **B**4 years or 10,000 hours	Drain and clean system. Replace with new coolant.

A On Highway Trucks and Motor Coaches, City Transit Coaches, Pick up and Delivery, Short Trip, and Emergency Vehicles.

B Industrial, Generator Set, and other applications.

Note: Detailed marine engine coolant fill options and maintenance intervals are listed in Table 5-23 and listed in Table 5-24.

Table 5-22 Cooling System Cleaning Intervals

 Copyright © 2004 DETROIT DIESEL CORPORATION

Item	Water Solution	Antifreeze Solution Premixed Coolant with Water
Products	*POWER COOL®* 3000 (P/N 23507855)	*POWER COOL®* (P/N 23518918)
Initial Fill	3% by Volume *POWER COOL®* 3000	100% by Volume *POWER COOL®*
Maintenance	Check with PowerTrac test strip every 250 hours or 1 year, whichever comes first. Add *POWER COOL®* 3000 to maintain 3% by volume concentration.	Check with PowerTrac test strip every 250 hours or 1 year, whichever comes first. Add SCA or dilute coolant as needed.
Maintenance — Drain and Fill	Drain, clean system, and replace with new coolant every 2 years or 4,000 hours, whichever comes first.	Drain, clean system, and replace with new coolant every 2 years or 4,000 hours, whichever comes first.

Table 5-23 Coolant Initial Fill Options and Maintenace Intervals — Commercial Marine Engines

Item	Water Solution (See Notes)	Antifreeze Solution Premixed Coolant with Water
Products	*POWER COOL®* Plus 6000	*POWER COOL®* Plus Marine
Initial Fill	10% by Volume *POWER COOL®* Plus 6000 in water.	100% by Volume *POWER COOL®* Plus Marine.
Maintenance	Check with PowerTrac test strip every 250 hours or 1 year, whichever comes first. Add 2% by volume *POWER COOL®* Plus 6000 (P/N 23522128) every 2 years.	Check with PowerTrac test strip every 250 hours or 1 year, whichever comes first. Add 0.6% by volume *POWER COOL®* Extender (P/N 23519400) every 2 years.
Maintenance — Drain and Fill	Drain, clean system, and replace with new coolant every 4 years or 10,000 hours, whichever comes first.	Drain, clean system, and replace with new coolant every 4 years or 10,000 hours, whichever comes first.

Table 5-24 Coolant Initial Fill Options and Maintenace Intervals — Pleasure Craft Marine Engines

(Rev. 2004) *All information subject to change without notice.*
6SE483 0401 Copyright © 2004 DETROIT DIESEL CORPORATION

9. Do not use the following in Detroit Diesel engine cooling systems:
   - ☐ Soluble oil
   - ☐ Chromate SCA
   - ☐ Methoxy propanol-base coolant
   - ☐ Methyl alcohol-base coolant
   - ☐ Sealer additives or coolant containing sealer additives
   - ☐ HVAC coolant

 Copyright © 2004 DETROIT DIESEL CORPORATION

(Rev. 2004) All information subject to change without notice.
6SE483 0401 Copyright © 2004 DETROIT DIESEL CORPORATION

6 AIR INTAKE SYSTEM

Section		Page
6.1	AIR INTAKE SYSTEM OVERVIEW	6-3
6.2	AIR CLEANER	6-9
6.3	AIR SEPARATOR	6-11
6.4	INTAKE MANIFOLD	6-13
6.5	CLOSED CRANKCASE BREATHER FOR SERIES 60G AUTOMOTIVE ENGINES	6-24
6.6	TURBOCHARGER (DIESEL)	6-26
6.7	TURBOCHARGER SERIES 60 GAS ENGINES (GENSET)	6-82
6.8	TURBOCHARGER SERIES 60 NATURAL GAS (AUTOMOTIVE) ENGINE	6-97
6.9	RECIRCULATION VALVE FOR SERIES 60G AUTOMOTIVE ENGINE	6-116
6.10	CHARGE AIR COOLER	6-118
6.11	THROTTLE ACTUATOR FOR THE SERIES 60G ENGINE	6-128
6.12	AIR DRYER	6-133
6.A	ADDITIONAL INFORMATION	6-135

 Copyright © 2004 DETROIT DIESEL CORPORATION

6.1 AIR INTAKE SYSTEM OVERVIEW

The air intake system consists of the following components:

- ☐ Air cleaner or air silencer
- ☐ Gas mixer (Series 60 gas engine)
- ☐ Turbocharger
- ☐ Charge air cooler
- ☐ Throttle actuator (Series 60 gas engine)
- ☐ Intake manifold
- ☐ Air dryer

 Copyright © 2004 DETROIT DIESEL CORPORATION

The turbocharger supplies air under pressure to the CAC and then to the intake manifold. The air enters the turbocharger after passing through the air cleaner or air silencer. Power to drive the turbocharger is extracted from energy in the engine exhaust gas. The expanding exhaust gases turn a single stage turbocharger wheel, which drives an impeller, thus pressurizing intake air. This charge air is then cooled by an air-to-air or air-to-water (marine engine) intake manifold before flowing into the cylinders for improved combustion efficiency. See Figure 6-1.

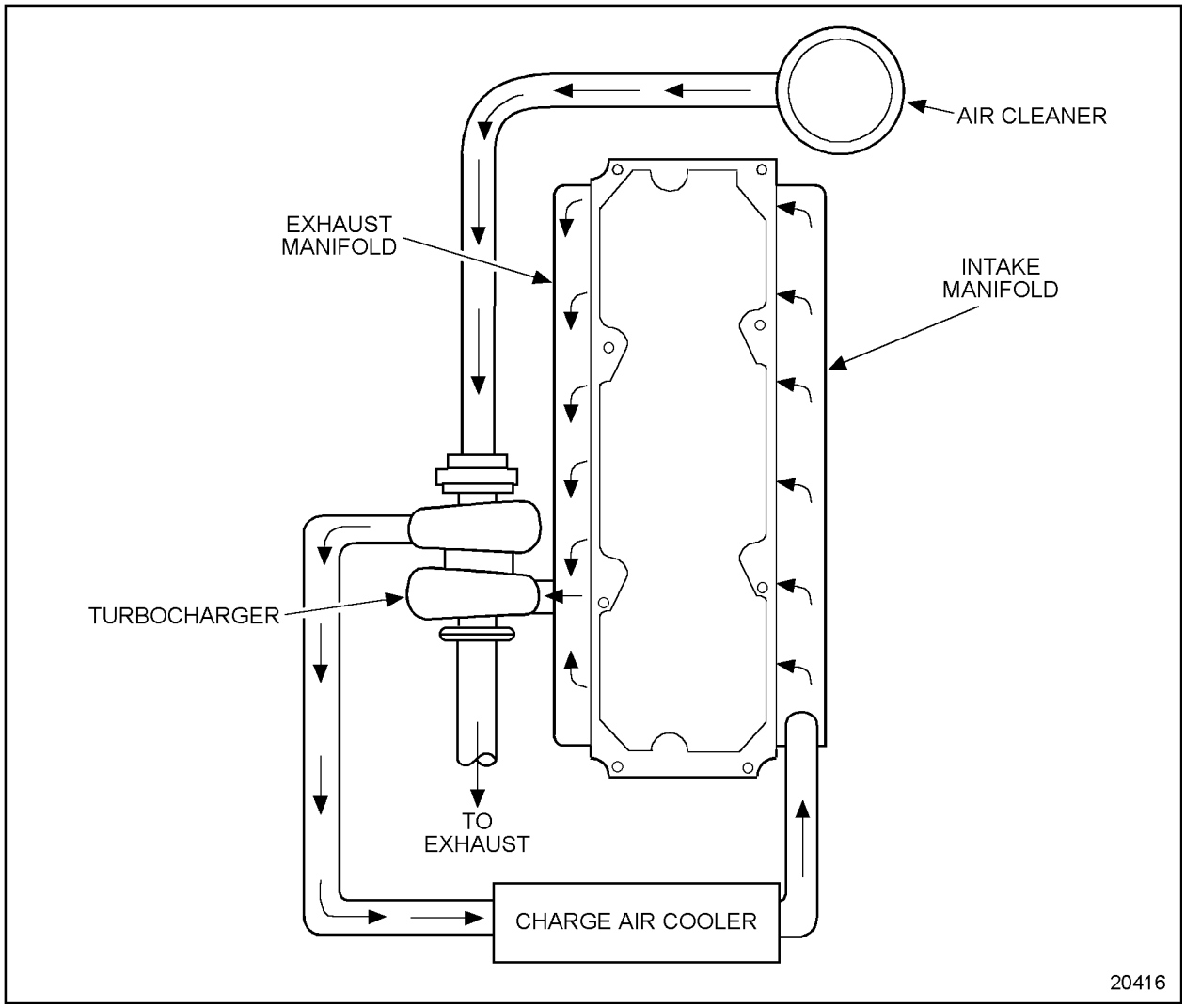

Figure 6-1 Air Intake System Schematic (Series 60 Diesel Engine)

On vehicle and industrial engines, charge air cooler (CAC) is mounted ahead of the engine coolant radiator. The pressurized intake charge is routed from the discharge side of the turbocharger, through the CAC to the intake manifold, which directs the air to ports in the cylinder head, through two intake valves per cylinder, and into the cylinder. At the beginning of the compression stroke, each cylinder is filled with clean air.

(Rev. 2004) *All information subject to change without notice.*
6SE483 0401 Copyright © 2004 DETROIT DIESEL CORPORATION

On heat exchanger-cooled pleasure craft marine engines, the raw water-cooled charge air cooler/air intake manifold is mounted on the intake side of the engine. The pressurized intake charge is routed from the discharge side of the turbocharger, through the CAC/intake manifold, which directs the air to the ports in the cylinder head. See Figure 6-2.

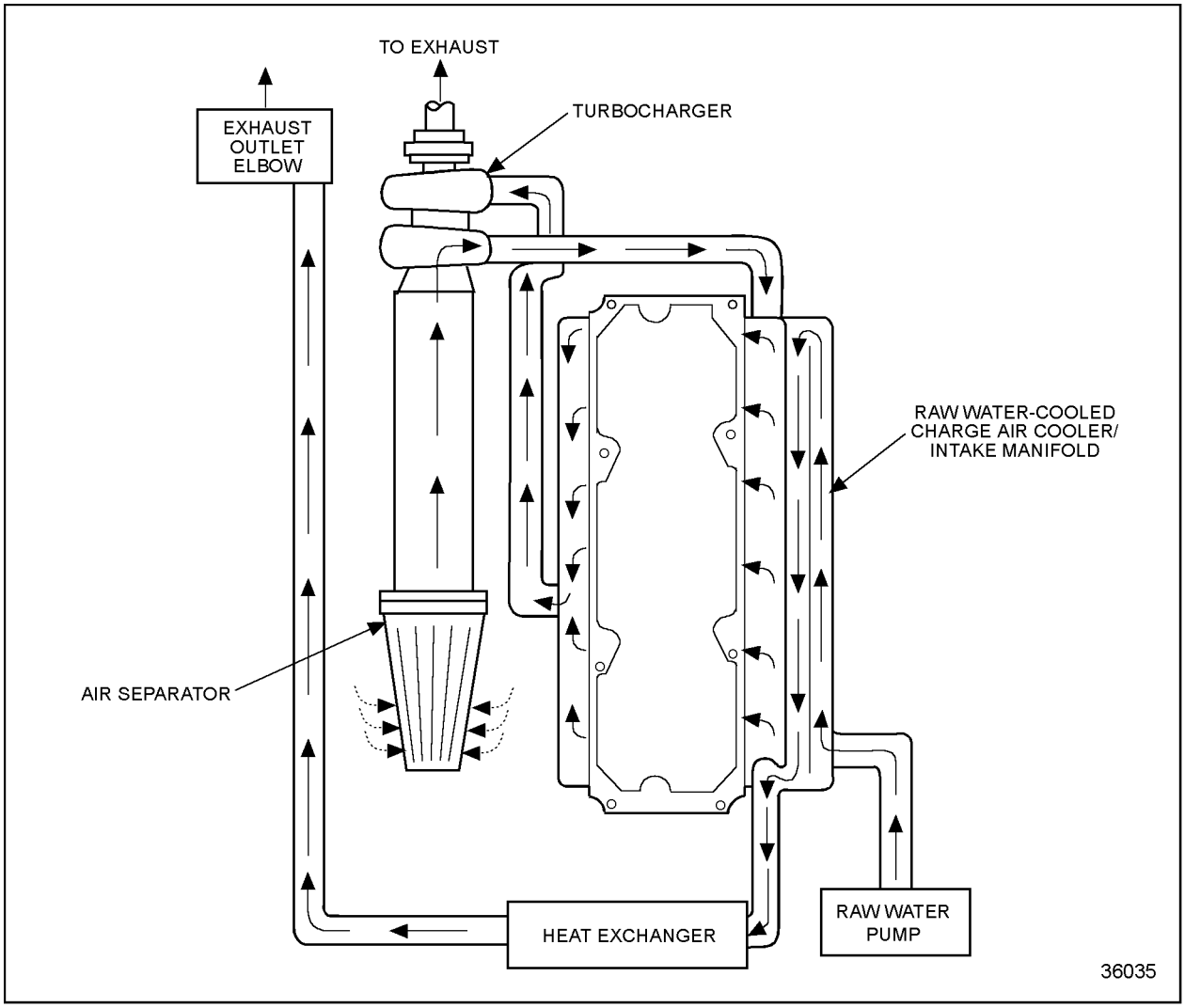

Figure 6-2 **Air Intake System Schematic — Heat Exchanger-Cooled Marine Engine**

 Copyright © 2004 DETROIT DIESEL CORPORATION

On keel-cooled commercial marine engines, the charge air cooler (CAC) is mounted at the front of the engine. The pressurized intake charge is routed from the discharge side of the turbocharger, through the CAC to the intake manifold, which directs the air to ports in the cylinder head, through two intake valves per cylinder, and into the cylinder. At the beginning of the compression stroke, each cylinder is filled with clean air. See Figure 6-3.

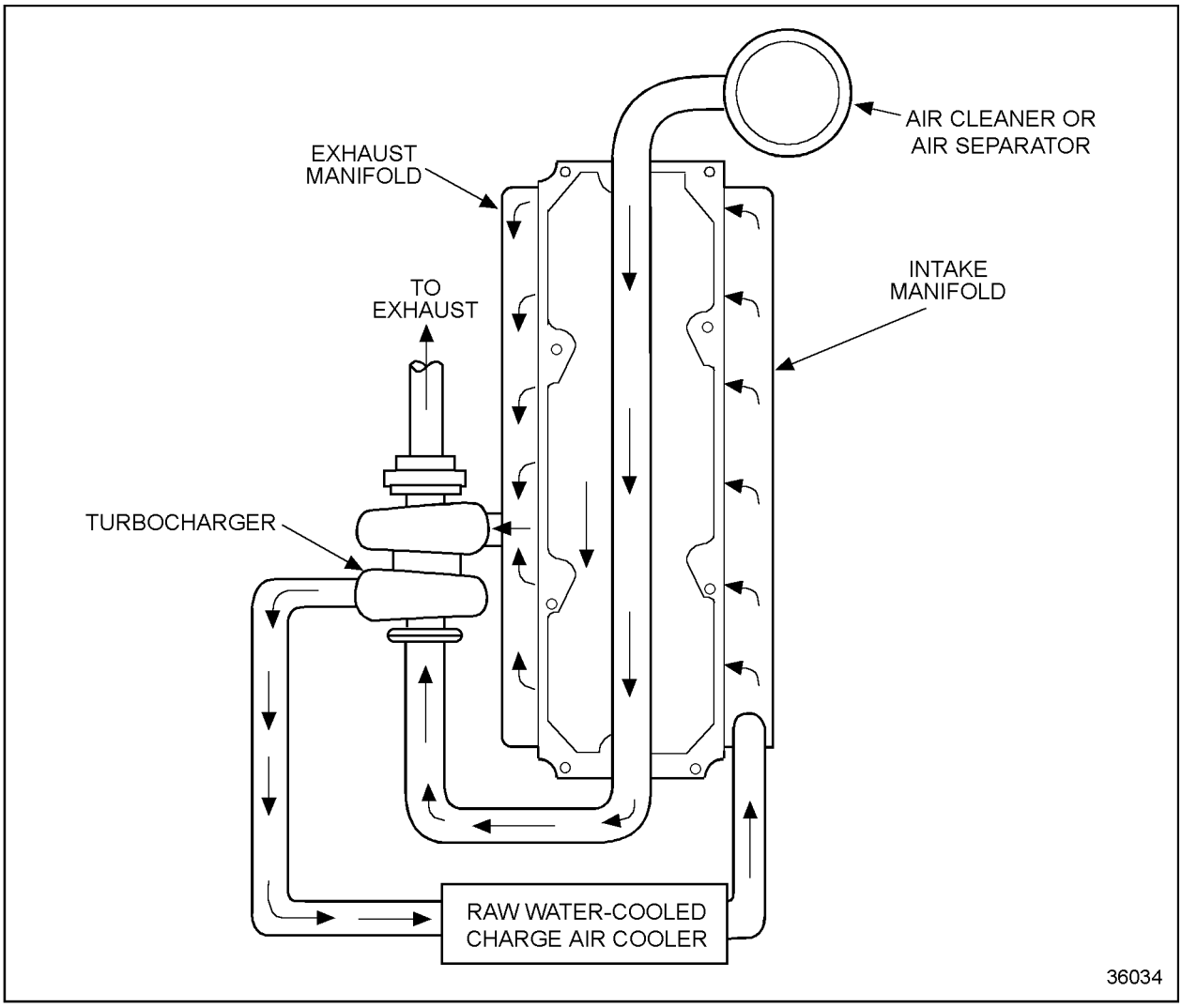

Figure 6-3 Air Intake System Schematic — Keel-Cooled Marine Engine

Repair and replacement procedures for the individual components of the air intake system are contained in this section.

(Rev. 2004) *All information subject to change without notice.*
6SE483 0401 Copyright © 2004 DETROIT DIESEL CORPORATION

6.1.1 Air System for Series 60G Engine (Low Pressure Natural Gas)

The air system components on the Series 60G engine with low pressure fuel system are similar to the diesel engine air system except for the addition of a gas mixer and throttle, see Figure 6-4. The turbocharger for this engine is similar to the diesel turbocharger. The features are described in more detail in the turbocharger section. Refer to section 6.7.

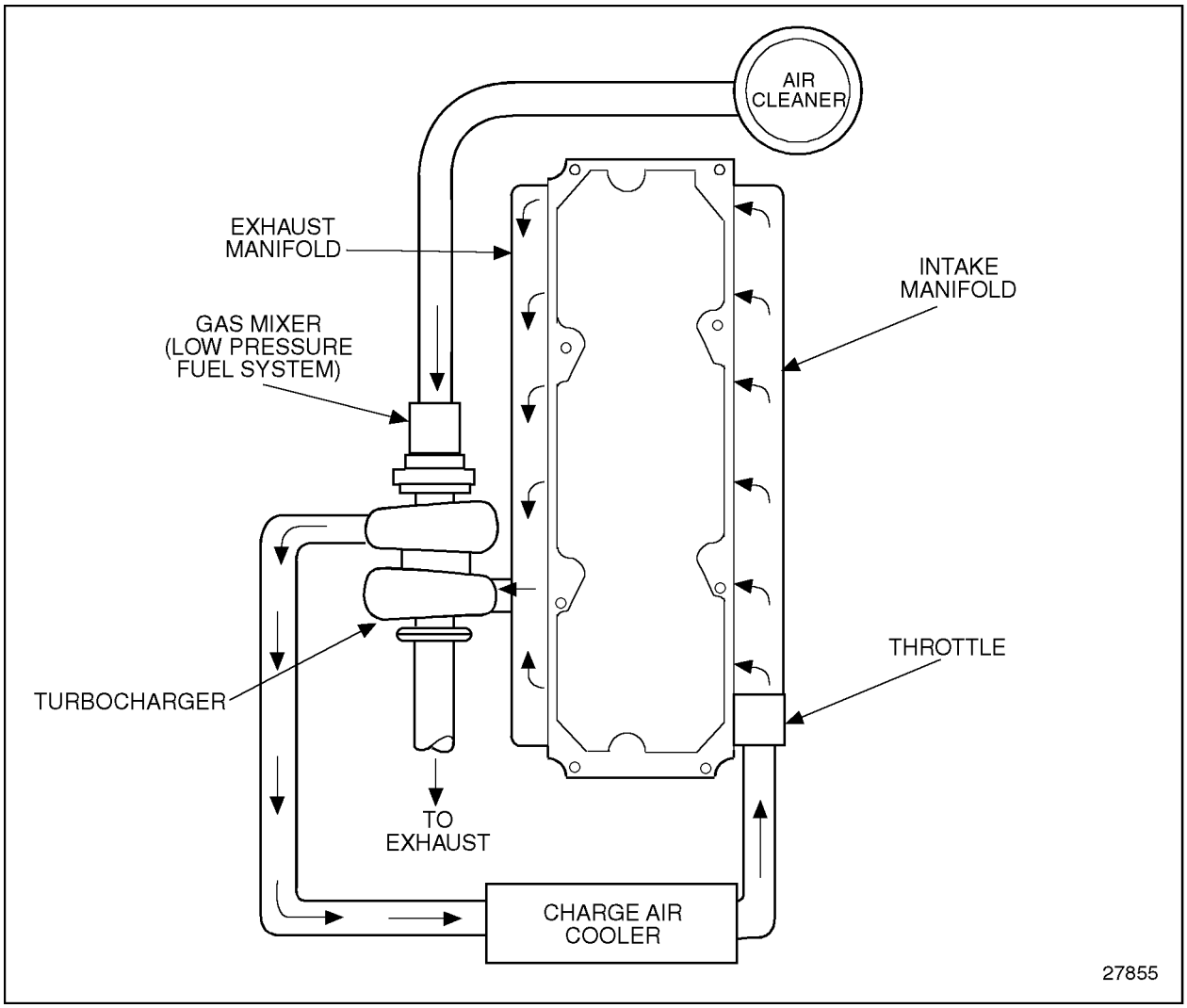

Figure 6-4 Air Intake System Schematic Series 60G (Low Pressure)

On genset engines, which have the low pressure fuel system, air is drawn into the gas mixer ahead of the turbocharger. A precisely controlled flow of natural gas is mixed with the air and flows into the turbocharger where it is compressed before flowing through the charge air cooler. This combustible air fuel mix then passes through the throttle and into the intake manifold. The throttle controls the flow of air-fuel mixture to the intake manifold there by providing control over the power output of the engine.

 Copyright © 2004 DETROIT DIESEL CORPORATION

6.1.2 Air System for Series 60G (High Pressure)

The air system components on the Series 60G engine with high pressure fuel system are similar to the diesel engine air system except for the addition of a gas mixer and throttle, See Figure 6-5. The turbocharger for this engine is also different and features a turbine bypass (wastegate) and compressor recirculation valve. These features are described in more detail in the turbocharger section. Refer to section 6.5.

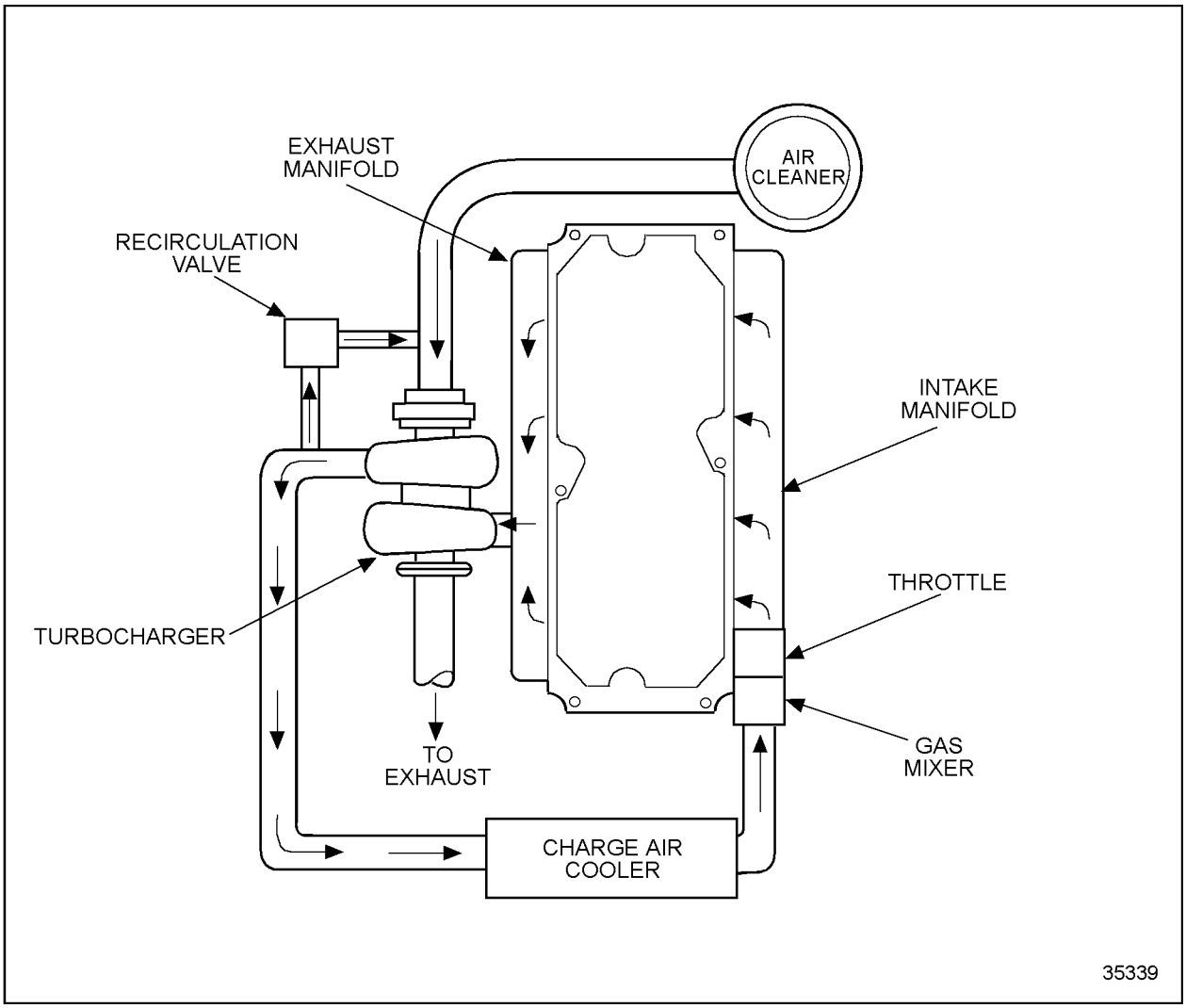

Figure 6-5 Air Intake System Schematic 60G (High Pressure)

In this system, air leaving the charge air cooler enters the mixer assembly and is mixed with a precisely controlled flow of natural gas. This combustible air fuel mixture then passes through the throttle and into the intake manifold. The throttle controls the flow of air-fuel mixture to the intake manifold there by providing control over the power output of the engine.

(Rev. 2004) *All information subject to change without notice.*
6SE483 0401 Copyright © 2004 DETROIT DIESEL CORPORATION

6.2 AIR CLEANER

Air cleaners are designed to remove foreign matter from the air and pass the required volume of air for proper combustion. Manufacturers guidelines should be consulted to maintain efficient operation for a reasonable period of time before requiring service.

The importance of keeping dust and grit-laden air out of the engine cannot be overemphasized, since clean air is essential to satisfactory engine operation and long engine life. Should dust in the air supply enter the engine, it would be carried into the cylinders and, due to its abrasive properties, cause premature wear of the moving parts. Dirt, which is allowed to build up in the air cleaner passages, will eventually restrict the air supply to the engine and result in heavy carbon deposits on the valves and pistons due to incomplete combustion. The air cleaner must have a capacity large enough to retain the material separated from the air to permit operation for a reasonable length of time before cleaning is required.

NOTICE:
Detroit Diesel is aware of attempts to use air cleaner elements made of foam or fabric batting material soaked with a sticky substance to improve dirt-holding capability. In some installations this substance has been found to transfer from the filter media, coating the inside surfaces of air ducts and engine air inlet systems, blowers, and air boxes. The result has been reduced engine performance and a change in engine operating conditions.

Only oil bath type and dry paper element type air cleaners are recommended for use on all Detroit Diesel Series 60 engines. Alternate types of air filtration systems may be available in the after-market. Detroit Diesel does not recommend use or extend warranty to cover damage or malfunction of engine components as a result of usage on Detroit Diesel Series 60 engines.

If a foam or fabric air cleaner element soaked with a sticky, dirt-holding substance was previously installed, check for the presence of coated engine components. Remove and clean coated engine components as required. Refer to section 1.1.2.

 Copyright © 2004 DETROIT DIESEL CORPORATION

6.2.1 Repair or Replacement of Air Cleaner

Refer to the OEM guidelines for air cleaner service procedures.

6.2.2 Removal and Cleaning of Air Cleaner

Detroit Diesel does not offer air cleaners as original equipment on Series 60 engines.

NOTICE:
Always vacuum check air intake restriction indicators after cleaning to ensure proper operation. Failure to observe this step may result in faulty indicator readings, which may lead to inefficient engine operation and/or damage.

Refer to OEM guidelines for removal and cleaning procedures.

6.2.3 Air Cleaner Installation

Refer to OEM guidelines for installation and verification procedures.

(Rev. 2004) *All information subject to change without notice.*
6SE483 0401 Copyright © 2004 DETROIT DIESEL CORPORATION

6.3 AIR SEPARATOR

The breather system consists of an air separator assembly mounted to the inlet side of the turbocharger, along with an oil drain tube(s), check valve(s), required breather piping and mounting hardware.See Figure 6-6.

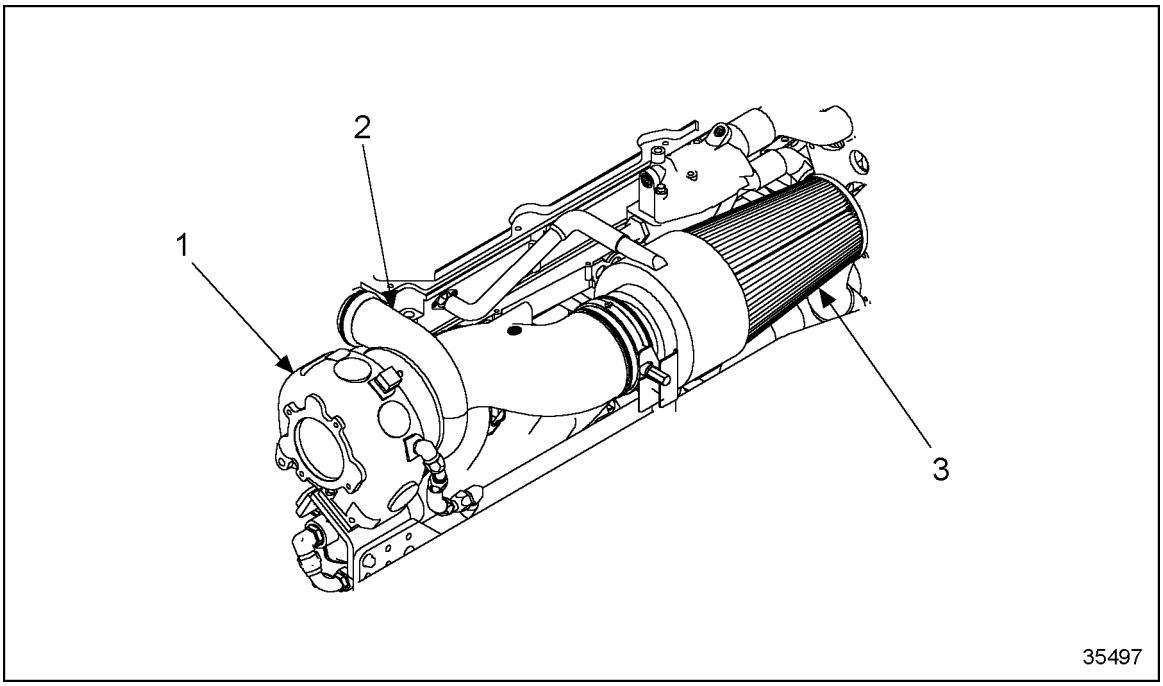

1. Turbine Housing
2. Compressor Housing
3. Air Separator Assembly

Figure 6-6 Typical Air Separator System

The system performs three functions:

- ☐ Collects the crankcase vapors normally emitted to atmosphere and separates particles of oil from the vapors. Any oil collected in this manner drains back to the crankcase, while the remaining fumes are mixed with the turbocharger air flow. This system virtually eliminates crankcase fumes from the engine room.
- ☐ Filters the outside air entering the turbocharger. The oil-coated filter element removes dirt and salt particles from the incoming air.
- ☐ Serves as an air silencer to reduce air induction noise.

 Copyright © 2004 DETROIT DIESEL CORPORATION

6.3.1 Repair or Replacement of Air Separator Filter Element

Refer to OEM for repair procedures.

NOTICE:
Failure to clean the air separator filter and the vacuum regulator/limiter will affect the operation of the air separator and may cause reduced engine performance and/or engine damage caused by engine overheating.

Refer to section 13.14, preventive maintenance for change intervals and cleaning and replacement procedures.

(Rev. 2004) *All information subject to change without notice.*
6SE483 0401 Copyright © 2004 DETROIT DIESEL CORPORATION

6.4 INTAKE MANIFOLD

On diesel engines, the intake charge air is routed to the individual cylinders by an intake manifold that is bolted to the cylinder head with seven bolts. The mating surface of the manifold and cylinder head is machined. The intake manifold is sealed to the cylinder head with three 2-port graphite coated gaskets. If the manifold is removed, new gaskets must be installed to maintain seal under higher boost pressure. A turbo-boost pressure sensor is mounted to the intake manifold with two bolts. An O-ring seals the boost sensor where it enters a hole in the manifold. On DDEC III/IV engines there is an air temperature sensor located on the bottom of the manifold. See Figure 6-7. and see Figure 6-8. The intake manifold air inlet is attached to the CAC ducting and the air compressor using flexible hose and clamps.

 Copyright © 2004 DETROIT DIESEL CORPORATION

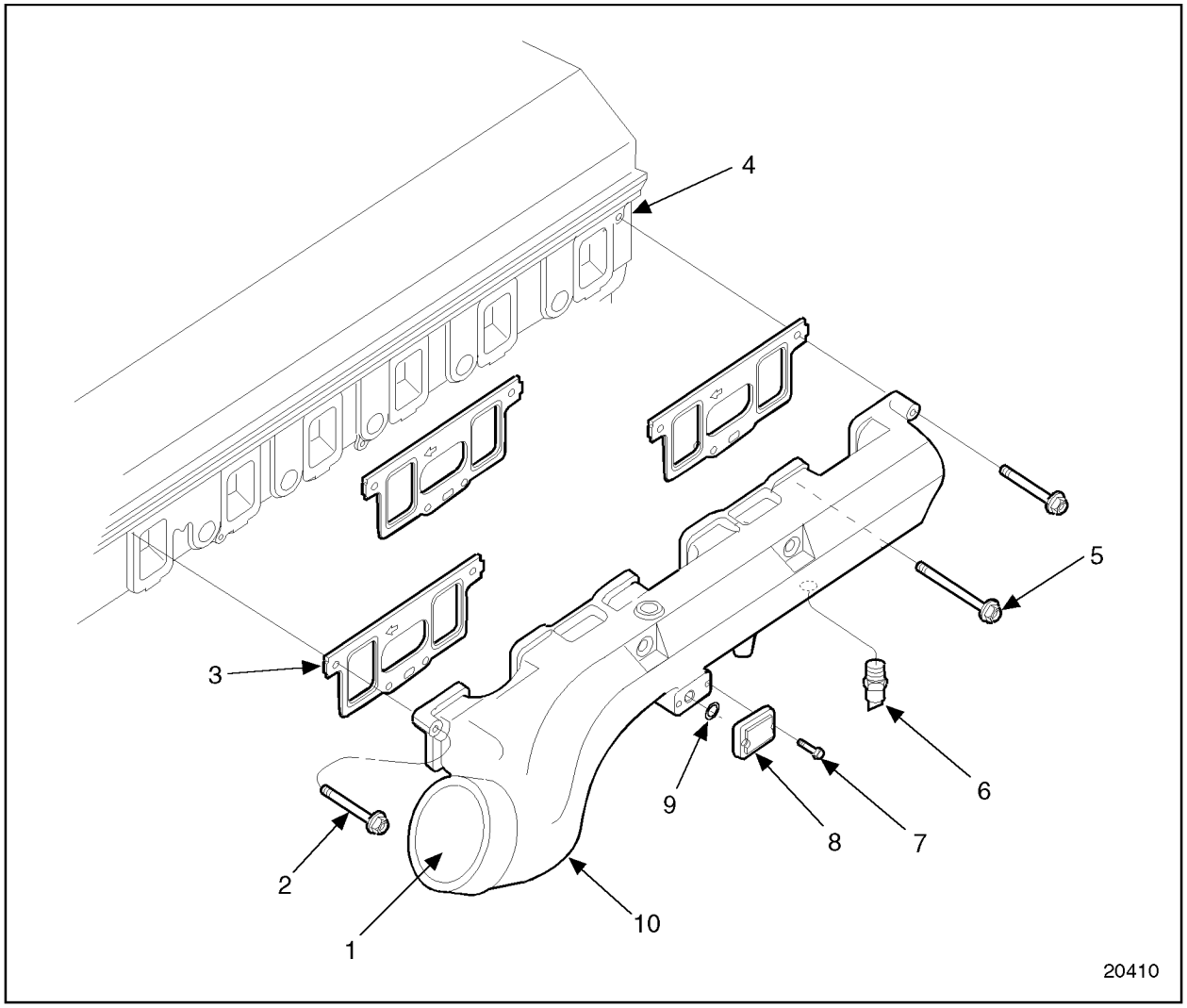

1. Intake Manifold Inlet
2. Bolt (2)
3. Intake Manifold Gasket
4. Cylinder Head
5. Bolt (5)
6. Air Temperature Sensor
7. Turbo Boost Sensor Bolt
8. Turbo Boost Sensor
9. O-ring
10. Intake Manifold

Figure 6-7 Intake Manifold and Related Parts — All Diesel (Except Heat Exchanger-Cooled Pleasure Craft Marine) Engine

(Rev. 2004) *All information subject to change without notice.*
6SE483 0401 Copyright © 2004 DETROIT DIESEL CORPORATION

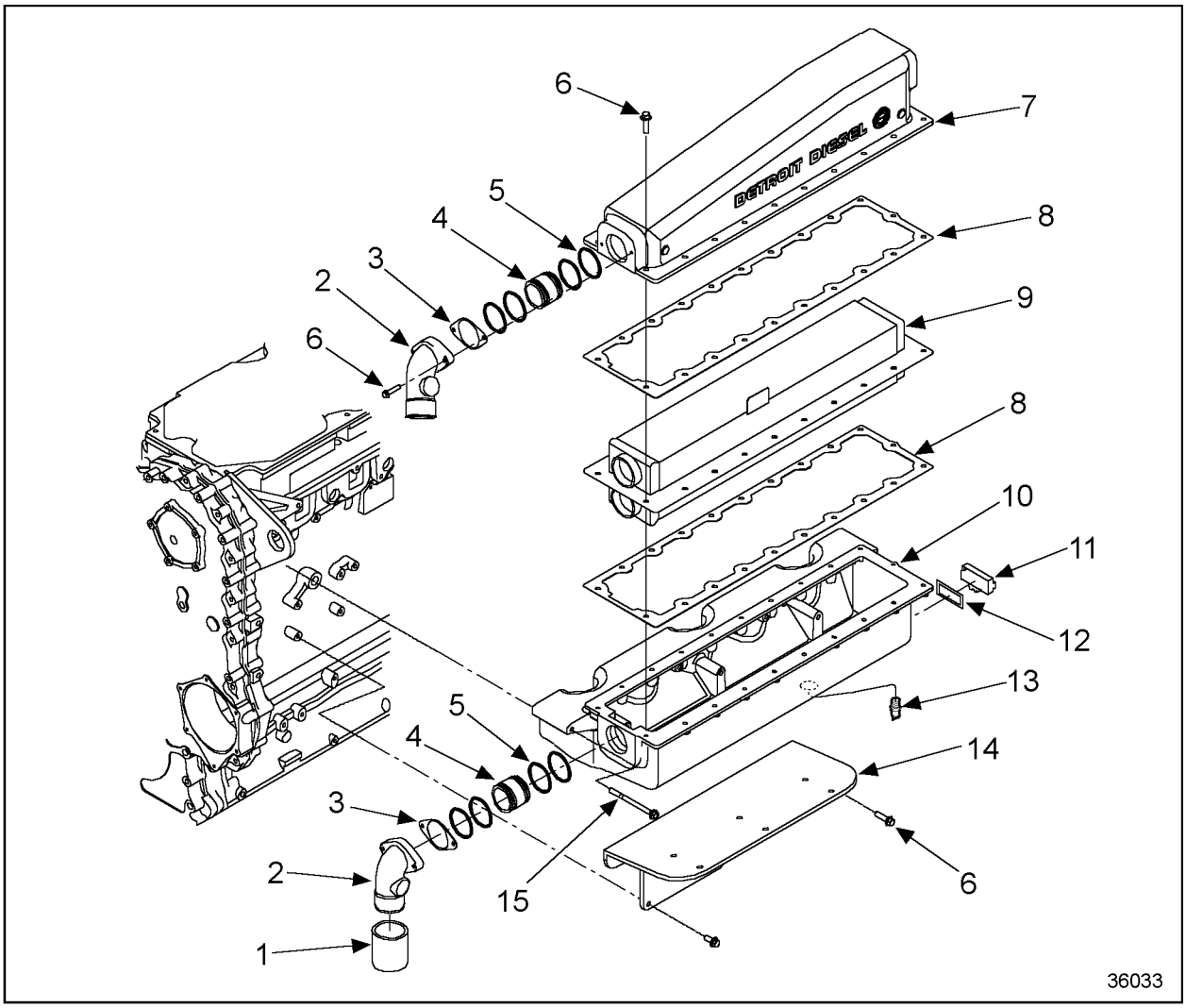

1. Hose
2. Elbow
3. Gasket
4. Sleeve
5. Seal Ring
6. Bolt
7. Housing Upper
8. Gasket
9. CAC Matrix
10. Housing Lower
11. Sensor
12. Seal Ring
13. Air Temperature Sensor
14. Bracket
15. Bolt

Figure 6-8 Intake Manifold and Related Parts — Heat Exchanger-Cooled Pleasure Craft Marine Engine

On Series 60 Gas engines a pipe thread hole is provided for mounting the air inlet pressure sensor. The Series 60G engines are throttled and therefore require a wide range boost sensor capable of measuring both negative and positive pressures in the intake manifold. In natural gas engines the intake manifold contains a combustible air-fuel mixture. See Figure 6-9.

 Copyright © 2004 DETROIT DIESEL CORPORATION

⚠ CAUTION:

The air inlet manifold contains combustible gas. To avoid injury from explosion, do not connect the air inlet manifold to any devices or lines external to the manifold.

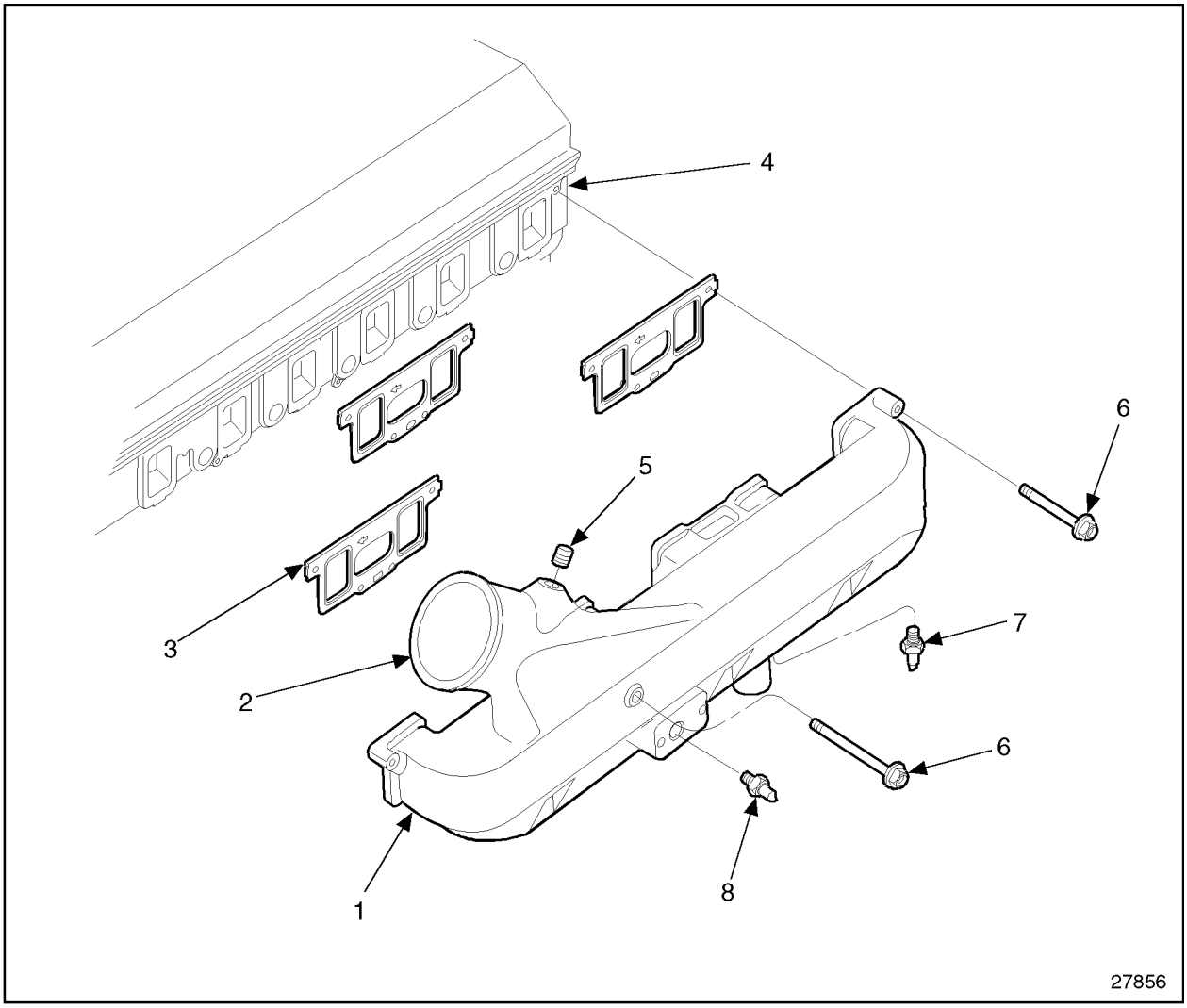

1.Intake Manifold
2.Air/Gas Inlet
3.Intake Manifold Gasket
4.Cylinder Head
5.Pipe Plug
6.Manifold Bolt
7.Air Temperature Sensor (Low Pressure System Only)
8.Air Inlet Pressure Sensor

Figure 6-9 Intake Manifold and Related Parts Series 60 Gas Engine

(Rev. 2004) *All information subject to change without notice.*
6SE483 0401 Copyright © 2004 DETROIT DIESEL CORPORATION

6.4.1 Repair or Replacement of Intake Manifold

To determine if repair is possible or replacement of the intake manifold is necessary perform the following procedure. See Figure 6-10.

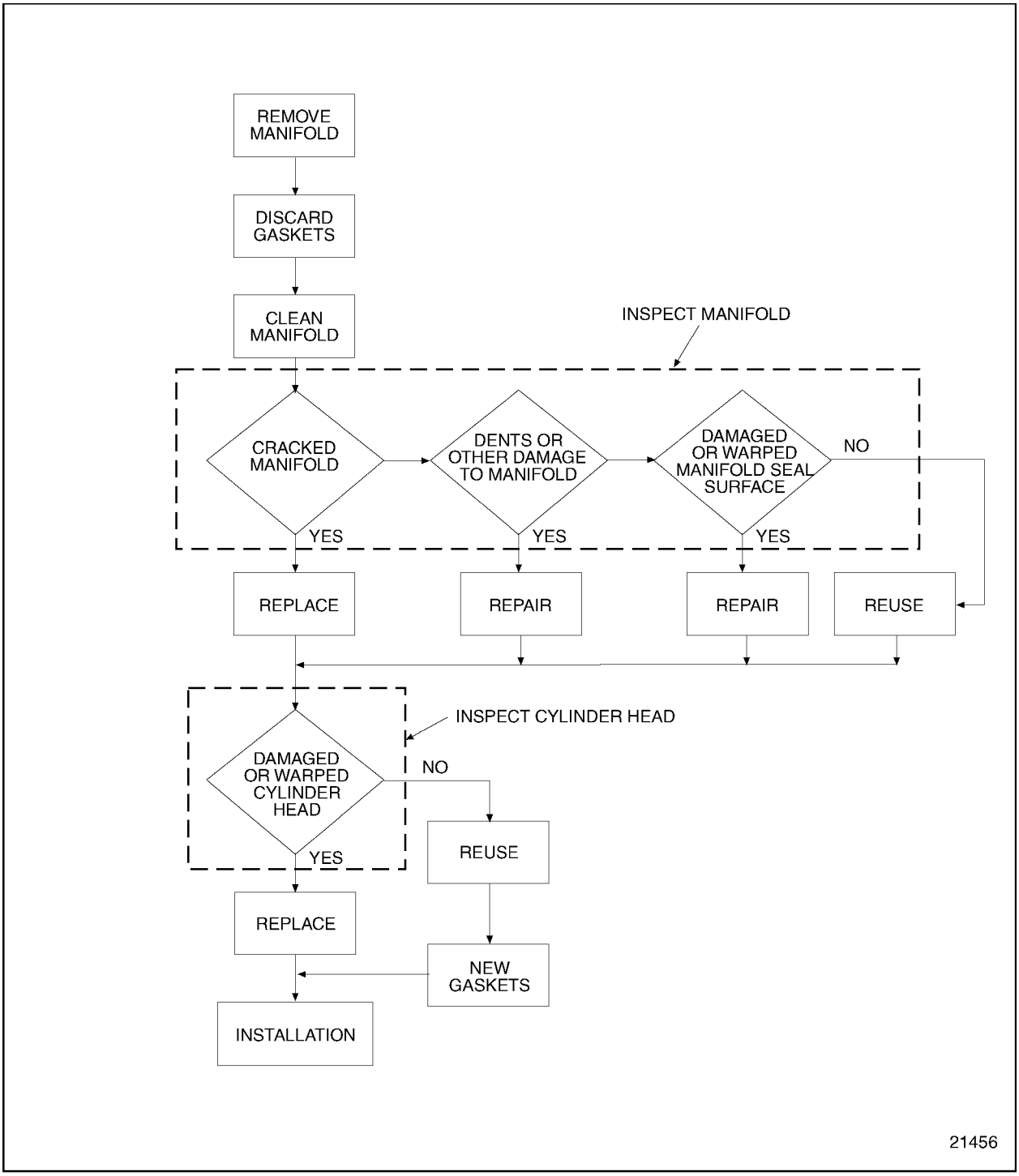

Figure 6-10 Flowchart for Repair or Replacement of Intake Manifold

 Copyright © 2004 DETROIT DIESEL CORPORATION

6.4.2 Removal of Intake Manifold

Remove the intake manifold as follows:

1. Disengage the locking tang on the turbo-boost pressure sensor connector. Grasp the connector body and pull it straight out of the turbo-boost pressure sensor.
2. Remove the turbo boost sensor. Refer to section 2.25.2.
3. Remove air temperature sensor. Refer to section 2.29.2.
4. If servicing a DDEC III/IV engine, disengage the locking tang on the air temperature sensor connector. Grasp the connector body and pull it straight out of the air temperature sensor.
5. Loosen the hose clamps connecting the hose coupling between the intake manifold and the CAC ducting. Slide the clamps and hose away from the intake manifold (diesel), or the elbow from the throttle (natural gas).
6. Remove the air compressor intake air line from the bottom of the intake manifold if used. Refer to section 10.1.5.
7. Remove the seven bolts that retain the intake manifold to the cylinder head.
8. Tap the intake manifold lightly to separate the intake manifold from the cylinder head.
9. Remove and discard manifold seals.

NOTE:
Units built prior to 6R0135846 may not have gasket seals.

10. Remove the intake manifold.

(Rev. 2004) *All information subject to change without notice.*
6SE483 0401 Copyright © 2004 DETROIT DIESEL CORPORATION

6.4.3 Cleaning of Intake Manifold

Clean the intake manifold, prior to inspection as follows:

NOTICE:
When removing and cleaning the intake manifold and cylinder head, J 36571 *must* be used. Failure to do so may damage the intake manifold, cylinder head or both.

1. Remove loose gasket material from the cylinder head and intake manifold mating surfaces.
2. To clean the intake manifold mating surface and the head port area, use the surface conditioning set J 36571. See Figure 6-11.
   [a] To clean steel surfaces use a coarse grit disc (brown), part of the surface conditioning set, J 36571 with an electric or air powered hand drill operating at a speed of 15,000-18,000 r/min. The pads are easily interchangeable using the disc holder provided in the set.
   [b] To clean aluminum surfaces use a medium grit disc (maroon), part of the surface conditioning set, J 36571 with an electric or air powered hand drill operating at a speed of 15,000-18,000 r/min. The pads are easily interchangeable using the disc holder provided in the set.

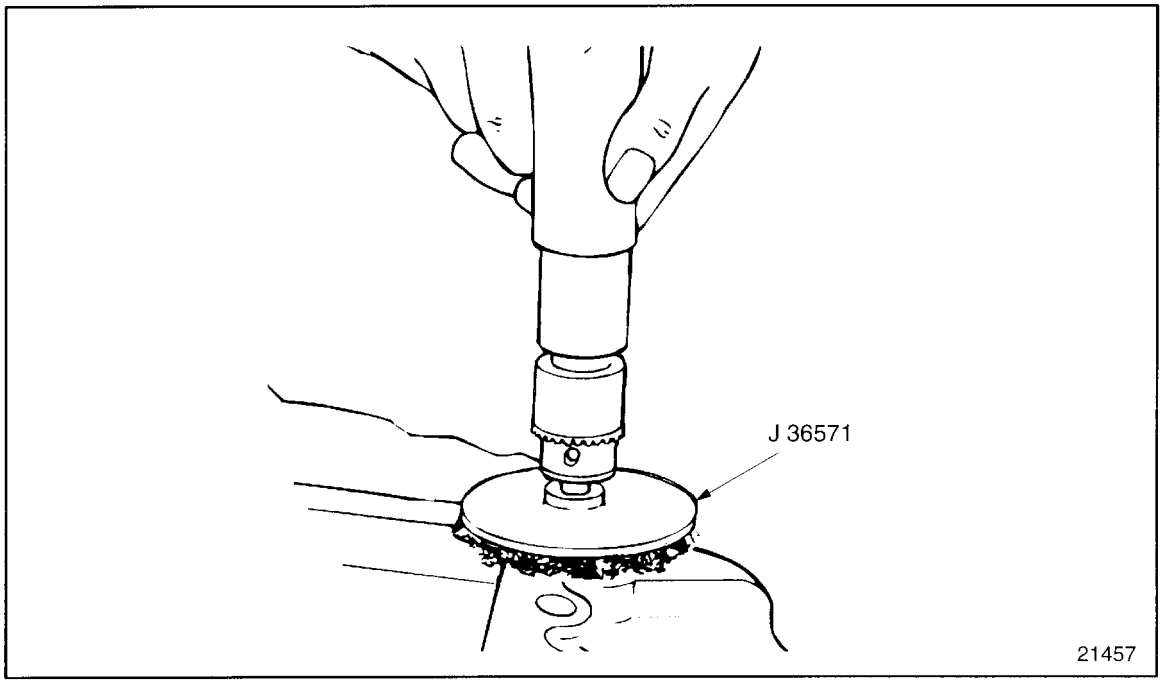

Figure 6-11 Cleaning the Manifold

 Copyright © 2004 DETROIT DIESEL CORPORATION

3. Wash all of the parts in clean fuel oil.

CAUTION:

To avoid injury from flying debris when using compressed air, wear adequate eye protection (face shield or safety goggles) and do not exceed 40 psi (276 kPa) air pressure.

4. Blow dry with compressed air.

6.4.3.1 Inspection of Intake Manifold

Inspect the intake manifold as follows:

1. Visually inspect the manifold for any cracks, dents or other damage. Pay particular attention to the bolt areas.
   [a] If a crack is found, replace the intake manifold. Refer to section 6.4.4.
   [b] If no cracks are found, reuse the intake manifold. Refer to section 6.4.4.
2. Inspect the manifold mating surface for imperfections that could affect its sealing to the cylinder head.
   [a] If the manifold mating surface has imperfections, replace the intake mainfold.
   [b] If the manifold mating surface is not damaged, reuse part. Refer to section 6.4.4.
3. Check the mating ports for warpage, using a 0.5 m (14 in.) long by 6 mm (1/4 in.) wide straight edge bar laying the bar across the manifold
   [a] If all port flange area measurements are less than 0.127 mm (0.005 in.), the manifold is reusable and can be reinstalled with new gaskets. Refer to section 6.4.4 for installation.
   [b] If the manifold does not meet this requirement the manifold *must* be resurfaced. Refer to section 6.4.4 for installation.

(Rev. 2004) *All information subject to change without notice.*
6SE483 0401 Copyright © 2004 DETROIT DIESEL CORPORATION

6.4.4 Installation of Intake Manifold

Install the intake manifold as follows:

NOTICE:
It is necessary to completely seal the intake manifold to the cylinder head, due to the high pressure of the intake charge provided by the turbocharger. The arrow on the gasket must point to the front of the engine. Gasket eliminator can not be used with intake manifold seals. Failure to seal this interface will reduce engine performance.

1. Install three new manifold gaskets to the mating surfaces of the intake manifold with the arrow on the gasket pointing to the front of the engine. See Figure 6-12.

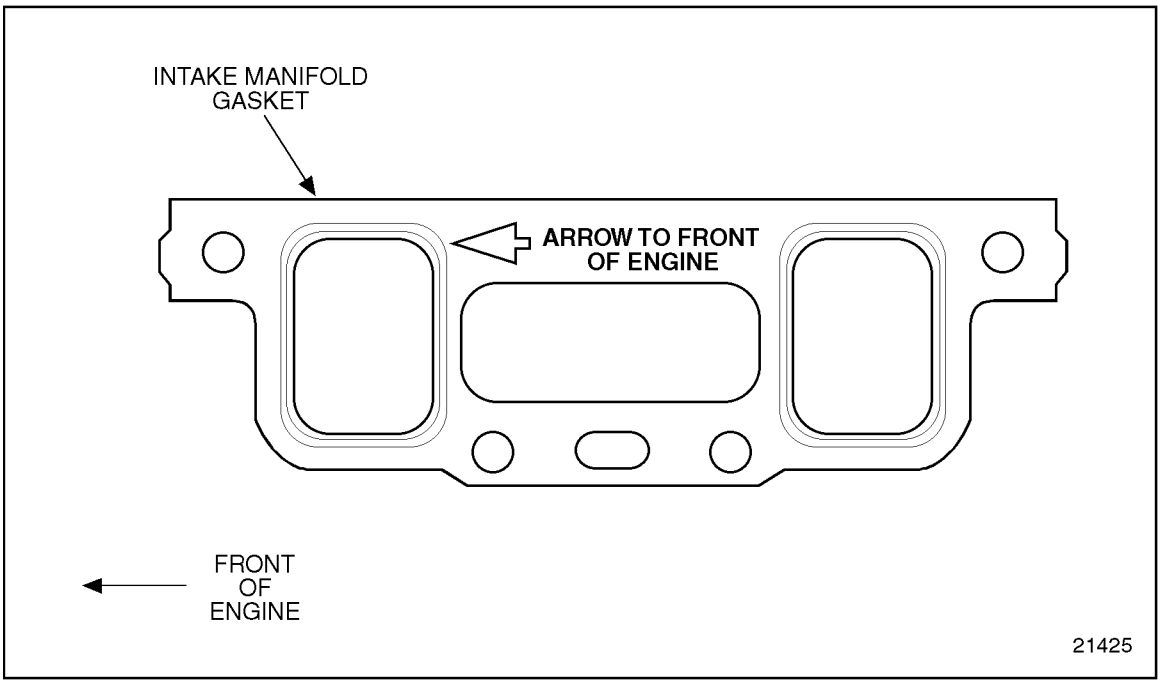

Figure 6-12 Intake Manifold Gasket Orientation

2. Install bolts six and seven through the intake manifold and into the cylinder head and hand-tighten. See Figure 6-13.

 Copyright © 2004 DETROIT DIESEL CORPORATION

3. Install the five remaining bolts through the intake manifold and into the cylinder head. Torque all of the intake manifold retaining bolts to 58-73 N·m (43-54 lb·ft) in the proper torque sequence. See Figure 6-13.

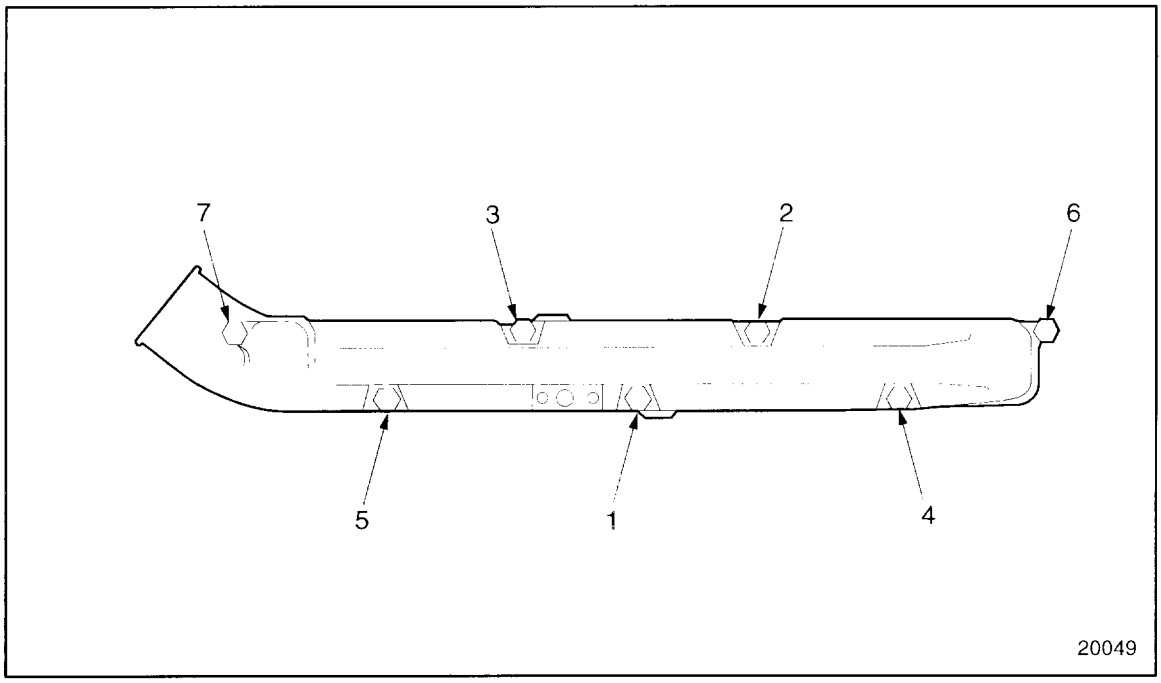

Figure 6-13 Intake Manifold Bolt Position and Torque Sequence

4. Plug in the turbo-boost pressure sensor wiring connector by pressing the connector into the body of the sensor until the locking tang snaps into place.
5. If servicing a DDEC III/IV engine, plug in the air temperature sensor wiring connector by pressing the connector into the body of the sensor until the locking tang snaps into place.

NOTICE:
Do not use any type of lubricant on the inside of any air inlet hose or on the hose contact surfaces of the turbocharger compressor housing, CAC, CAC ducting or the intake manifold. Use of lubricant can cause the hose to blow off when the turbocharger builds boost pressure.

6. Slide the hose over the intake manifold and position it to its original location.
7. Slide the hose clamps into place and tighten them alternately. Insure that hose clamps are installed away from the cast bead on the manifold inlet to prevent separation of the joint.

(Rev. 2004) *All information subject to change without notice.*
6SE483 0401 Copyright © 2004 DETROIT DIESEL CORPORATION

CAUTION:

The air inlet manifold contains combustible gas. To avoid injury from explosion, do not connect the air inlet manifold to any devices or lines external to the manifold.

8. Reattach air line to air compressor, if used, and tighten clamp. Refer to section 6.4.4.
9. Refer to section 11.8 for verification of proper intake manifold installation.

 Copyright © 2004 DETROIT DIESEL CORPORATION

6.5 CLOSED CRANKCASE BREATHER FOR SERIES 60G AUTOMOTIVE ENGINES

Closed breathers are required for natural gas automotive engines in 1998. The Series 60G engine uses a remote mount Racor CV4500 Crankvent breather/filter. See Figure 6-14.

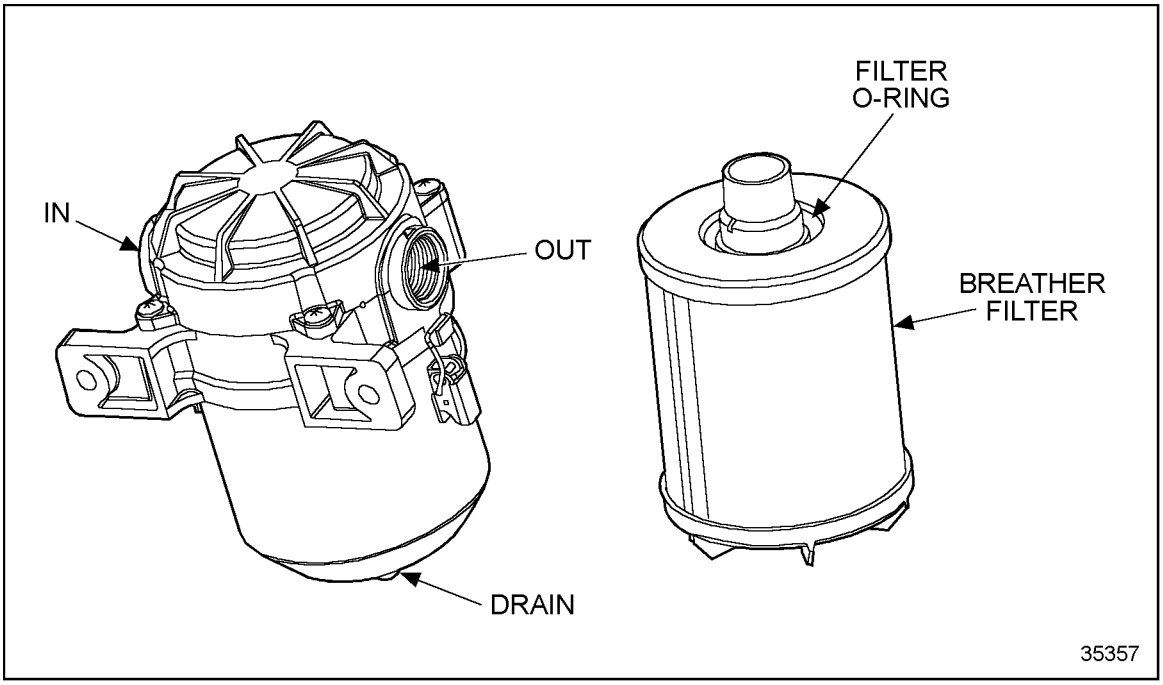

Figure 6-14 Crankvent and Breather Filter

The Crankvent contains a coalescing filter to remove liquid from the blowby gas. The liquid that is coalesced from the blowby is drained back to the ground. The blowby gas is routed out of the rocker cover, through the filter element and returns to the inlet side of the turbo.

(Rev. 2004) *All information subject to change without notice.*
6SE483 0401 Copyright © 2004 DETROIT DIESEL CORPORATION

6.5.1 Replacement of the Closed Crankcase Breather

The Crankvent coalescing filter is a nonservicable component but should be changed in conjunction with oil service intervals. Refer to section 13.10.3.

6.5.2 Removal of Closed Crankcase Breather

Remove the closed crankcase breather as follows:

1. Release latches on the side of the breather assembly and lower canister away from the assembly.
2. Remove the filter from the assembly.
3. Dispose of the used filter in an environmentally responsible manner.
4. Clean the filter canister with a clean lint-free cloth.

6.5.3 Installation of the Closed Crankcase Breather Filter

Install the closed crankcase breather filter as follows:

1. Insert new filter into the top of the assembly, ensuring the new filter contains the top O-ring. See Figure 6-14.
2. Replace the lower canister ensuring the larger O-ring is secure in the top half of the assembly.
3. Secure the latches on the side of the can.
4. There are two O-rings in the system. One on the filter element itself and one that seals between the lower canister and the upper body. Ensure both O-rings are secure before reassembling the crankvent.

 Copyright © 2004 DETROIT DIESEL CORPORATION

6.6 TURBOCHARGER (DIESEL)

The turbocharger is designed to increase the overall power and efficiency of the engine. Power to drive the turbocharger is extracted from the energy in the engine exhaust gas.

A turbocharger can be broken down into three basic pieces; a compressor cover, a center housing rotating assembly (CHRA), and a turbine housing.

The compressor cover provides a hose connection for the compressor inlet, and a V-band connection for the compressor outlet. The compressor cover is secured to the compressor side of the CHRA, and encloses the compressor wheel.

The CHRA contains a turbine wheel and shaft assembly, piston ring(s), thrust spacer, compressor wheel, and wheel retaining nut. This rotating assembly is supported on two pressure-lubricated bearings that are retained in the center housing by snap rings. Internal oil passages are drilled in the center housing to provide lubrication to the turbine wheel shaft bearings, thrust washer, thrust collar, and thrust spacer.

The turbine housing is a heat-resistant steel alloy casting that encloses the turbine wheel and provides a flanged engine exhaust gas inlet and an axially located turbocharger exhaust gas outlet. The turbine housing is secured to the turbine end of the center housing.

The Garrett (formerly Airesearch) family of turbochargers look similar. The model TV51 turbocharger is used on all Series 60 diesel engines through the 1989 models. The TV45 turbocharger is used on 1991 and later 11.1 liter displacement diesel engines. See Figure 6-15.

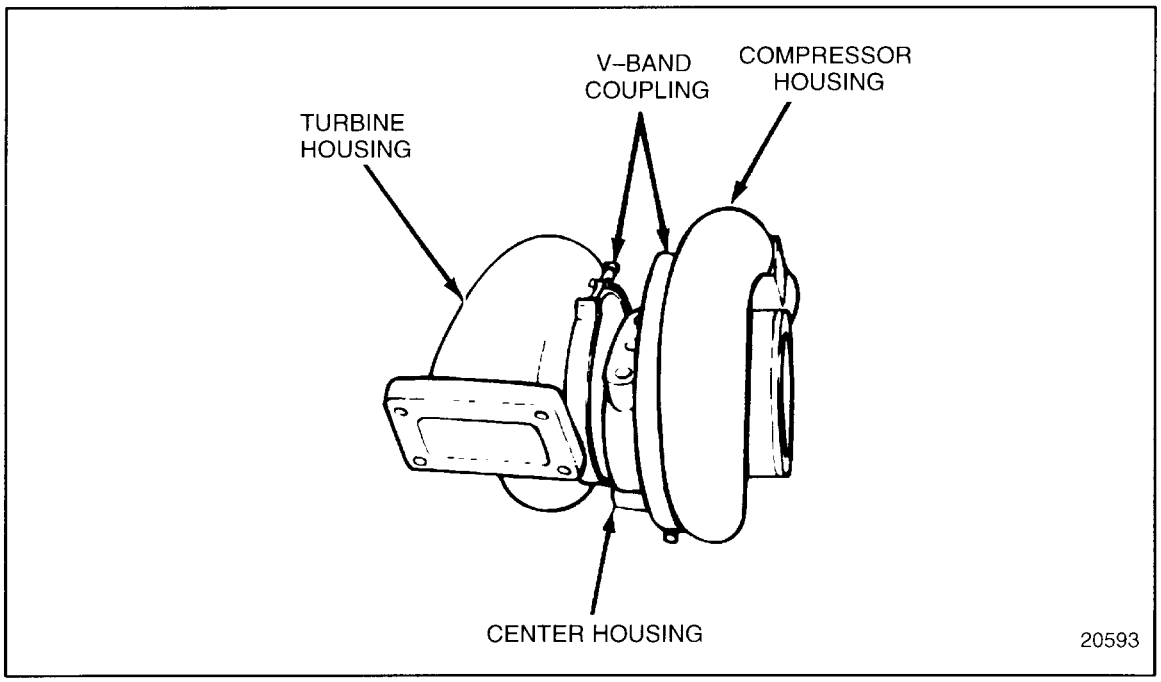

Figure 6-15 TV45, TV51 Turbocharger Assembly

(Rev. 2004) *All information subject to change without notice.*
6SE483 0401 Copyright © 2004 DETROIT DIESEL CORPORATION

A turbocharger with a water-cooled turbine housing is installed on all heat exchanger-cooled marine engines. This turbocharger is similar to "dry" turbochargers, except that it incorporates a water-jacketed turbine housing. The coolant supply line is located at the bottom of the turbine housing, and the return/bypass line is located at the top. The water-cooled turbocharger operates as follows:

Coolant from the fresh water pump flows through the supply line into the turbine housing. As it circulates through the housing, it picks up heat from the exhaust gasses used to drive the turbocharger. The heated coolant then passes into the thermostat housing and flows back to the heat exchanger, thus lowering its temperature. See Figure 6-16. Pressurized air from the turbocharger compressor outlet passes directly into the raw water-cooled charge air cooler/air intake manifold assembly, providing charge air for combustion. See Figure 6-17.

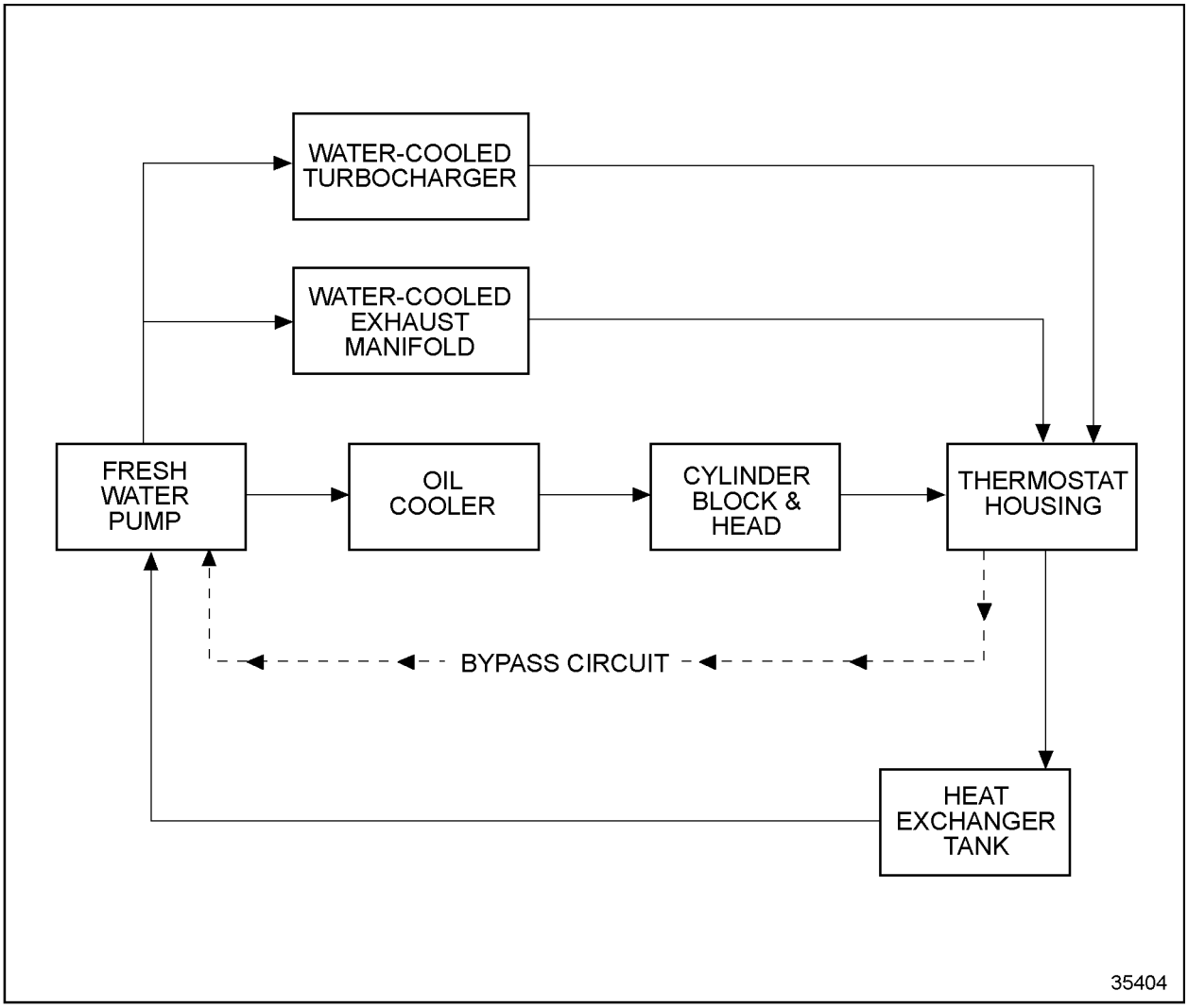

Figure 6-16 Fresh Water Cooling Circuit

 Copyright © 2004 DETROIT DIESEL CORPORATION

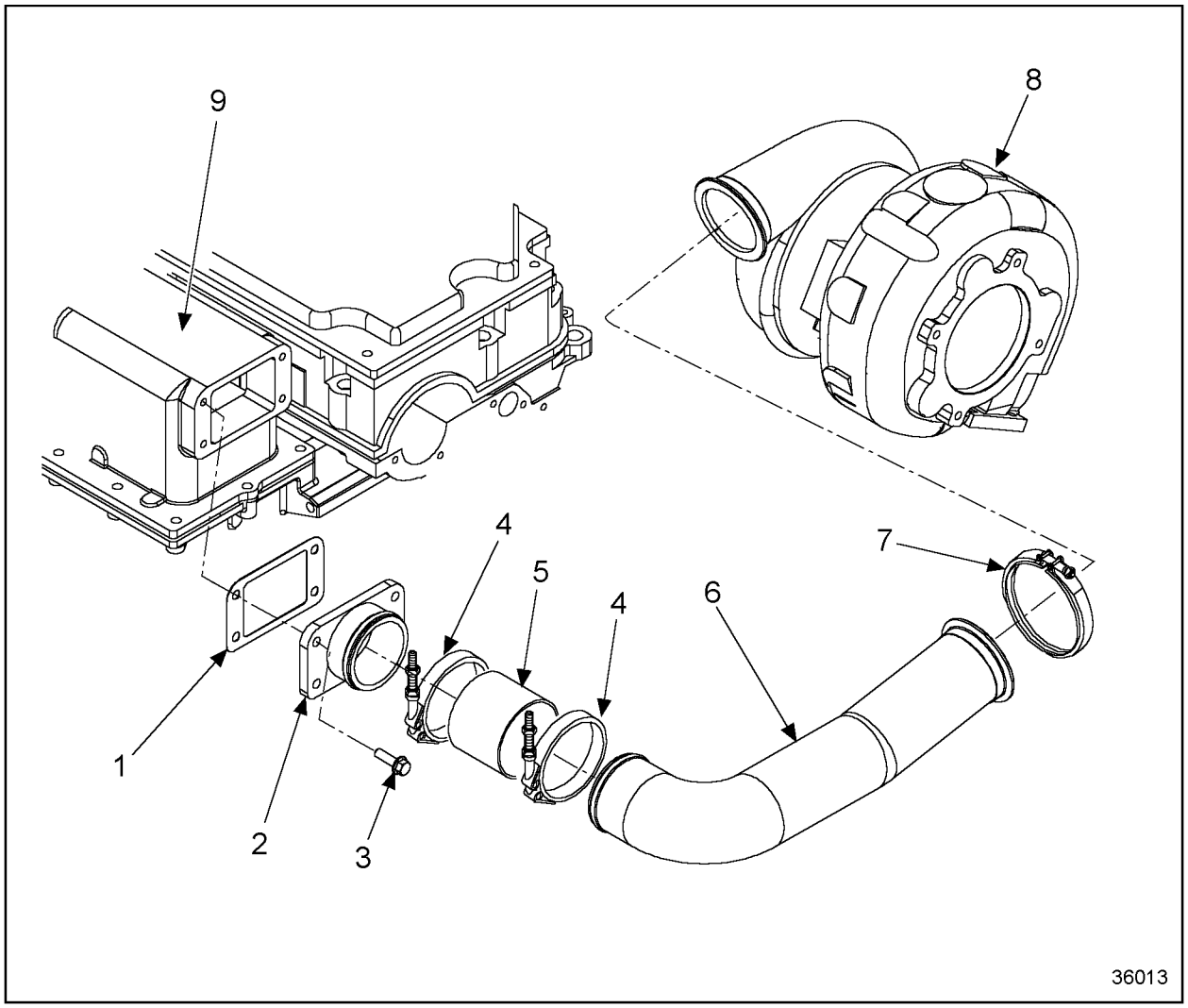

1. Gasket
2. End Plate
3. Bolt
4. Clamps, Hose
5. Hose
6. Air Inlet Tube
7. Clamps, Marmon - Style
8. Water-Cooled Turbocharger
9. Charge Air Cooler/Air Intake Manifold Assembly

Figure 6-17 Typical Heat Exchanger-Cooled Pleasure Craft Marine Turbocharger and Charge Air Cooler/Air Intake Manifold Installation

(Rev. 2004) *All information subject to change without notice.*
6SE483 0401 Copyright © 2004 DETROIT DIESEL CORPORATION

The TMF turbocharger is used on 1990 and later 12.7 liter displacement engines, except heat exchanger-cooled pleasure craft marine engines. See Figure 6-18.

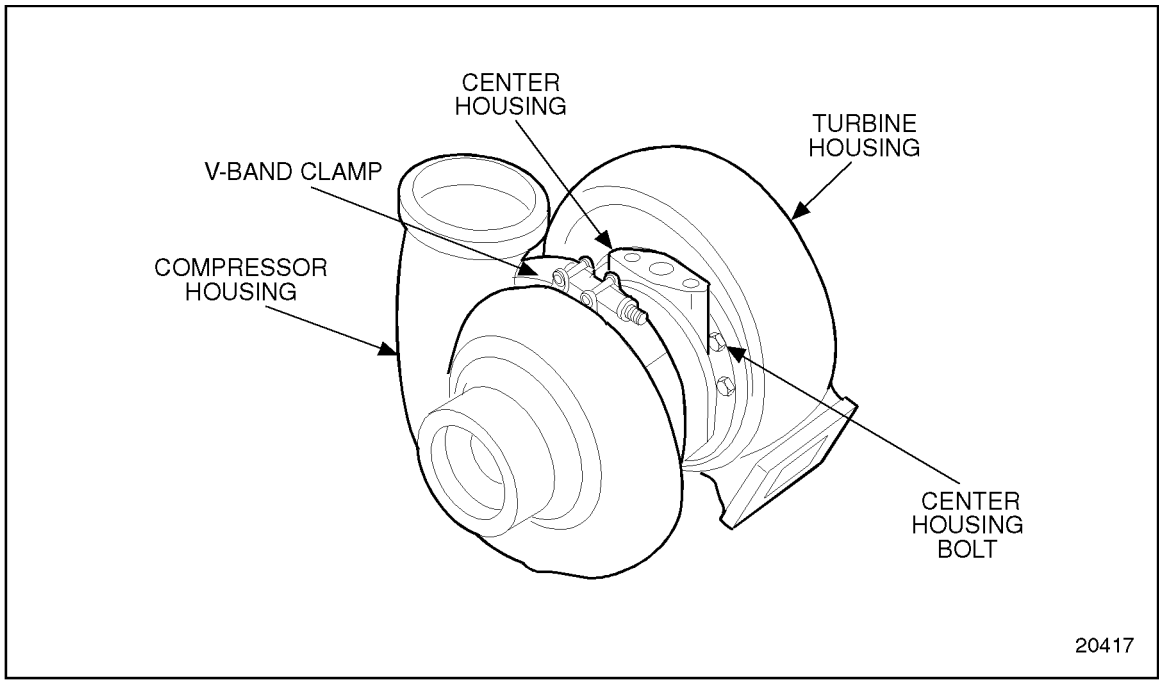

Figure 6-18 TMF Turbocharger Assembly

 Copyright © 2004 DETROIT DIESEL CORPORATION

The turbocharger is mounted on the exhaust outlet flange of the engine exhaust manifold. After the engine is started, the exhaust gases flow from the engine and through the turbine housing causing the turbine wheel and shaft to rotate. See Figure 6-19.

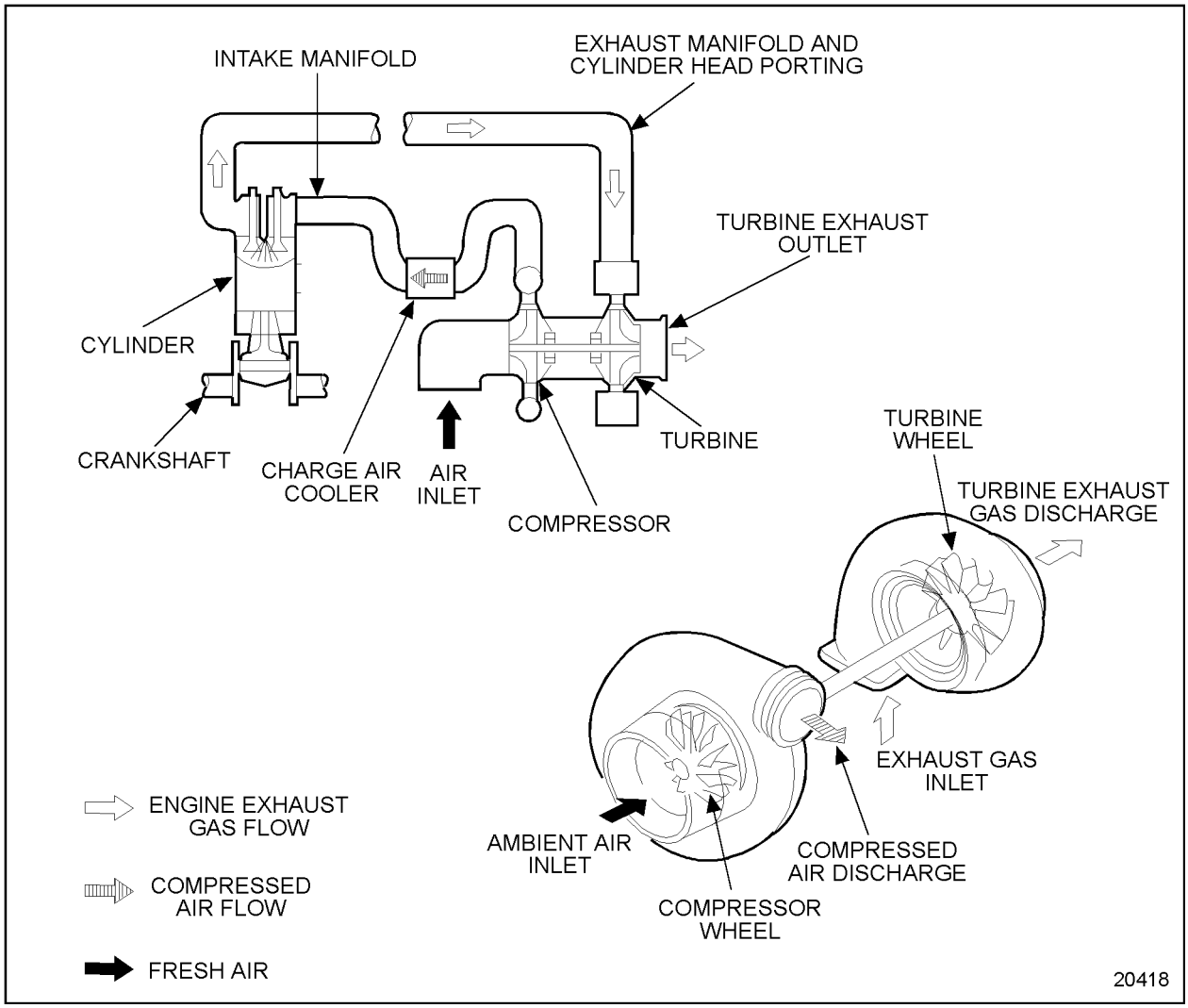

Figure 6-19 Schematic Air Flow Diagram

The gases are discharged into the exhaust system after passing through the turbine housing.

The compressor wheel, in the compressor housing, is mounted on the opposite end of the turbine wheel shaft and rotates with the turbine wheel. The compressor wheel draws in clean air, compresses it, and delivers high pressure air through the intake manifold to the engine cylinders.

(Rev. 2004) *All information subject to change without notice.*
6SE483 0401 Copyright © 2004 DETROIT DIESEL CORPORATION

Oil for lubricating the turbocharger is supplied under pressure through an external oil line extending from the oil filter adaptor to the top of the center housing. See Figure 6-20.

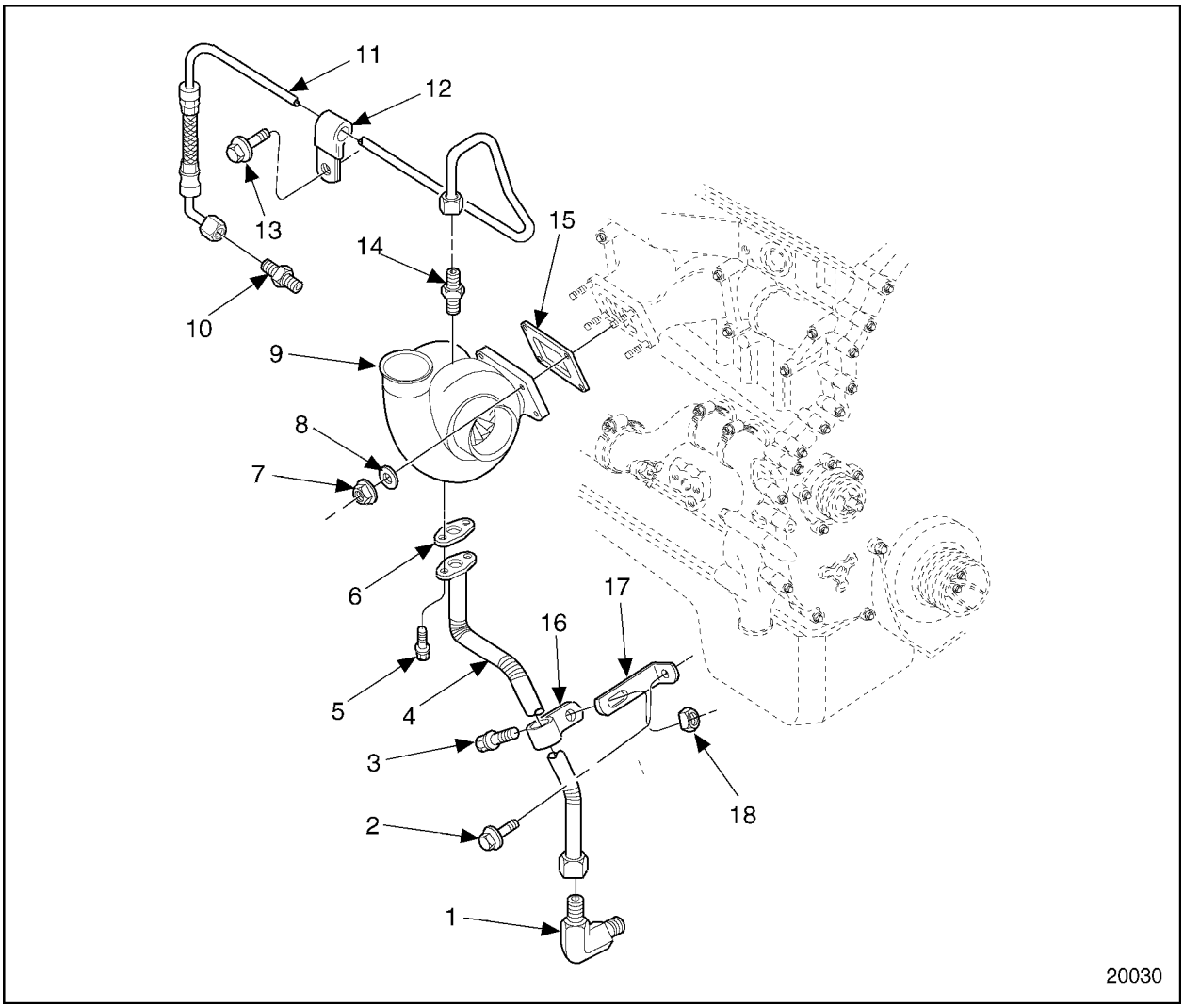

1. Elbow, Oil Drain Tube
2. Bolt, Mounting Bracket
3. Bolt, Oil Drain Tube Clip
4. Tube, Turbo Oil Drain
5. Bolt, Oil Drain Tube Mounting
6. Gasket, Turbo Oil Drain Tube
7. Nut, Turbo Mounting
8. Washer, Turbo Mounting
9. Turbocharger Assembly
10. Connector, Oil Supply Tube
11. Tube Assembly, Turbo Oil Supply
12. Clip, Oil Supply Tube
13. Bolt, Oil Supply Tube Clip
14. Connector, Oil Supply Tube (to turbocharger)
15. Gasket, Turbo Exhaust Inlet
16. Clip, Oil Drain Tube
17. Bracket, Oil Drain Tube Clip Mounting
18. Nut, Oil Drain Tube Clip

Figure 6-20 Turbocharger Oil Lines — All Engines (Except Heat Exchanger-Cooled Pleasure Craft Marine)

 Copyright © 2004 DETROIT DIESEL CORPORATION

From the oil inlet in the center housing, the oil flows through the drilled oil passages in the housing to the shaft bearings, thrust ring, thrust bearing, and backplate or thrust plate. See Figure 6-21.

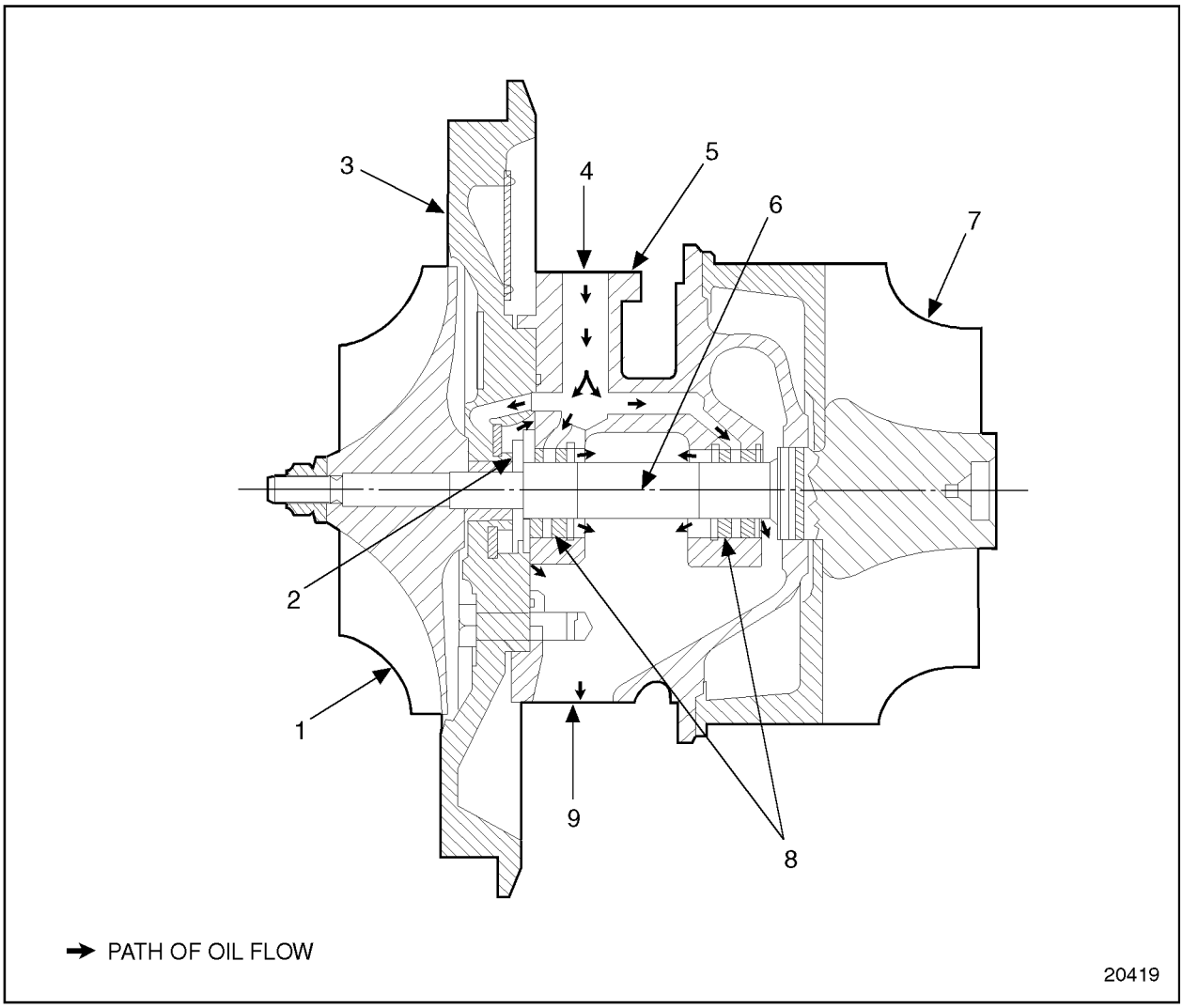

1. Compressor Wheel
2. Thrust Bearing
3. Backplate
4. Oil Inlet
5. Center Housing
6. Shaft
7. Turbine Wheel
8. Shaft Bearings
9. Oil Outlet

Figure 6-21 Turbocharger Oil Flow Diagram

(Rev. 2004) *All information subject to change without notice.*
6SE483 0401 Copyright © 2004 DETROIT DIESEL CORPORATION

The oil returns by gravity to the engine oil pan through an external oil line extending from the bottom of the turbocharger center housing to the cylinder block. See Figure 6-20.

If the turbocharger is water-cooled, the coolant supply line is connected to the bottom of the turbine housing, and the coolant return/bypass line is connected to the top. Coolant from the fresh water pump flows through the supply line into the turbine housing, passes into the thermostat housing then flows back to the heat exchanger, thus lowering its temperature.

For Series 60 engines with Exhaust Gas Recirculation (EGR) systems: The variable nozzle turbine (VNT) turbocharger uses a high pressure pneumatic actuator to regulate and control the Exhaust Gas Recirculation (EGR) system. There is no wastegate with this system. The VNT actuator is mounted on a bracket attached to the turbocharger and receives air pressure from the engine-mounted Variable Pressure Output Device (VPOD). The VNT actuator connects via a rod end to a pin joint of the turbine external arm. Rotation of the external arm simultaneously rotates several pivoting nozzle vanes positioned inside the turbine housing at the outer periphery of the turbine wheel, adjusting turbocharger speed and boost in accordance with the DDEC engine management control. A second actuator is the EGR valve actuator that controls the variable position of the EGR valve. The EGR valve outlet is connected to the EGR cooler and recirculates a fraction of the engine exhaust gases to the intake manifold for purposes of engine emission control. The Delta-P (Differential Pressure) sensor uses the differential pressure created by using a fixed orifice and pressure ports on either side of the fixed orifice to determine the actual EGR flow rate. The Delta-P sensor is the feedback loop to the ECM so the ECM can increase or decrease EGR flow via the VPODs, and determine if the EGR system is functioning properly. The EGR temperature sensor is used in conjunction with the Delta-P sensor to determine flow rate and the warn operator of EGR system malfunctions.

 Copyright © 2004 DETROIT DIESEL CORPORATION

6.6.1 Repair or Replacement of Turbocharger

To determine if repair is possible or replacement of the turbocharger is necessary perform the following procedure. See Figure 6-22.

NOTE:
VNT Turbochargers can only be repaired at a authorized service facility. Service is limited to replacement only.

(Rev. 2004) *All information subject to change without notice.*
6SE483 0401 Copyright © 2004 DETROIT DIESEL CORPORATION

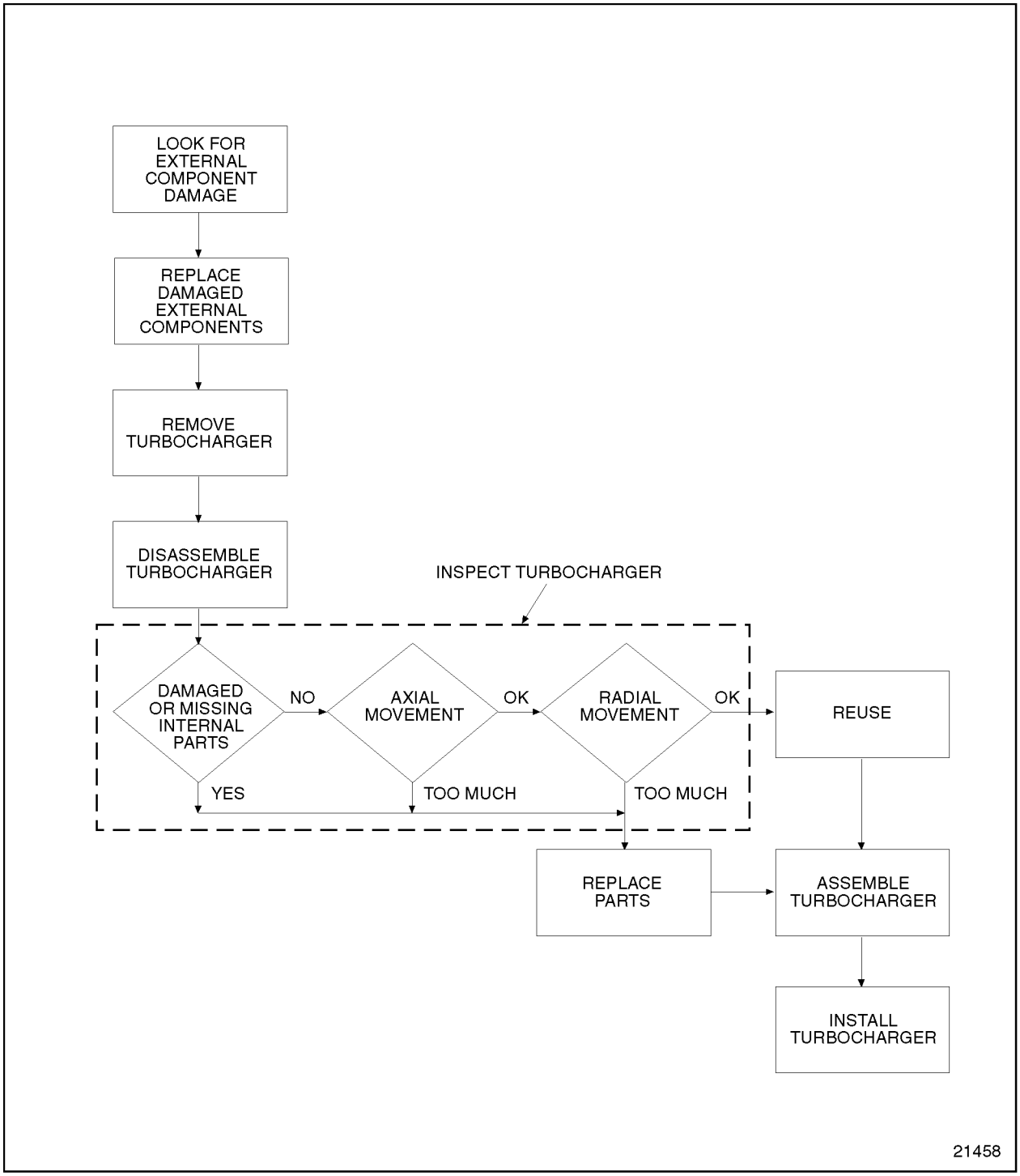

Figure 6-22 Flowchart for Repair or Replacement of Turbocharger

 Copyright © 2004 DETROIT DIESEL CORPORATION

6.6.2 Removal and Cleaning of Turbocharger

Cleaning the turbocharger is not necessary before removal.

CAUTION:

To avoid injury from hot surfaces, allow engine to cool before removing any component. Wear protective gloves.

CAUTION:

To avoid injury from contact with rotating parts when an engine is operating with the air inlet piping removed, install an air inlet screen shield over the turbocharger air inlet. The shield prevents contact with rotating parts.

Many Series 60 engines use turbochargers with ceramic turbine (exhaust) wheels. To avoid ceramic wheel damage, care must be taken to remove debris after servicing the air intake and exhaust systems on these engines.

(Rev. 2004) *All information subject to change without notice.*
6SE483 0401 Copyright © 2004 DETROIT DIESEL CORPORATION

NOTICE:

If the ceramic wheel becomes damaged or bursts, Detroit Diesel recommends replacing the exhaust system muffler if positioned in such a way that debris will fall back into the turbine housing. This precaution will prevent damage to the turbocharger at engine start-up.

Prior to removal, visually check for:

1. Missing or loose nuts and bolts.
2. Loose or damaged intake and exhaust ducting.
3. Damaged oil supply and drain lines.
4. Cracked or deteriorating turbocharger housings.
5. External oil leakage or coolant leakage, if water-cooled.
6. Replace damaged parts with new parts.

To remove the turbocharger, perform the following:

NOTICE:

Do not attempt to remove carbon or dirt buildup on the compressor or turbine wheels without removing the turbocharger from the engine. If chunks of carbon are left on the blades, an unbalanced condition will exist and subsequent failure of the bearings will result if the turbocharger is operated. However, it is not necessary to disassemble the turbocharger to remove dirt or dust buildup.

1. Disconnect and remove the CAC ducting at the compressor housing.
2. Disconnect and remove the air inlet hose attached to the compressor housing. Refer to section 6.10.2.
3. Disconnect the exhaust outlet pipe from the turbine housing of the turbocharger. For proper operation, the turbocharger rotating assembly must turn freely. Whenever the exhaust ducting is removed, spin the turbine wheel by hand.
4. Remove the inlet oil line from the top of the center housing.
5. Remove the oil drain line from the bottom of the center housing.
6. If turbocharger is water-cooled, drain coolant into a suitable container until engine coolant level is below the turbine inlet flange. Remove coolant inlet and outlet hoses from turbocharger.
7. Attach a chain hoist and a suitable lifting sling to the turbocharger assembly.
8. Remove the nuts securing the turbocharger assembly to the exhaust manifold. Then, lift the turbocharger assembly away from the engine and place it on a bench.

 Copyright © 2004 DETROIT DIESEL CORPORATION

9. Cover the end of the oil drain line, the oil outlet line, coolant inlet and outlet hoses (if water-cooled turbocharger), the air inlet and the exhaust outlet openings on the engine and turbocharger, to prevent the entry of foreign material.

CAUTION:

To avoid injury from improper use of chemicals, follow the chemical manufacturer's usage, handling, and disposal instructions. Observe all manufacturer's cautions.

10. Clean the exterior of the turbocharger with a non-caustic cleaning solvent before disassembly.

6.6.3 Disassembly of Turbocharger

VNT turbochargers are not repairable. Repair work on the VNT is limited to its replacement.

Prior to disassembly, the exterior of the turbocharger must be cleaned. Refer to section 6.6.2, step 10.

Disassemble the turbocharger as follows:

1. Mark the related positions of the compressor housing, center housing and turbine house with a punch or scribe to assure reassembly in the same relative position.

NOTICE:

Exercise care when removing the compressor housing and turbine housing to prevent damage to the compressor and turbine wheels.

2. Loosen the V-band coupling securing the compressor housing to the backplate assembly and remove the compressor housing and V-band.

(Rev. 2004) *All information subject to change without notice.*
6SE483 0401 Copyright © 2004 DETROIT DIESEL CORPORATION

3. Perform the following steps to disassemble the TV45 or TV51 turbocharger: See Figure 6-23.

   [a] Loosen the V-band coupling securing the turbine housing to the center housing.

   [b] Remove the turbine housing from the center housing.

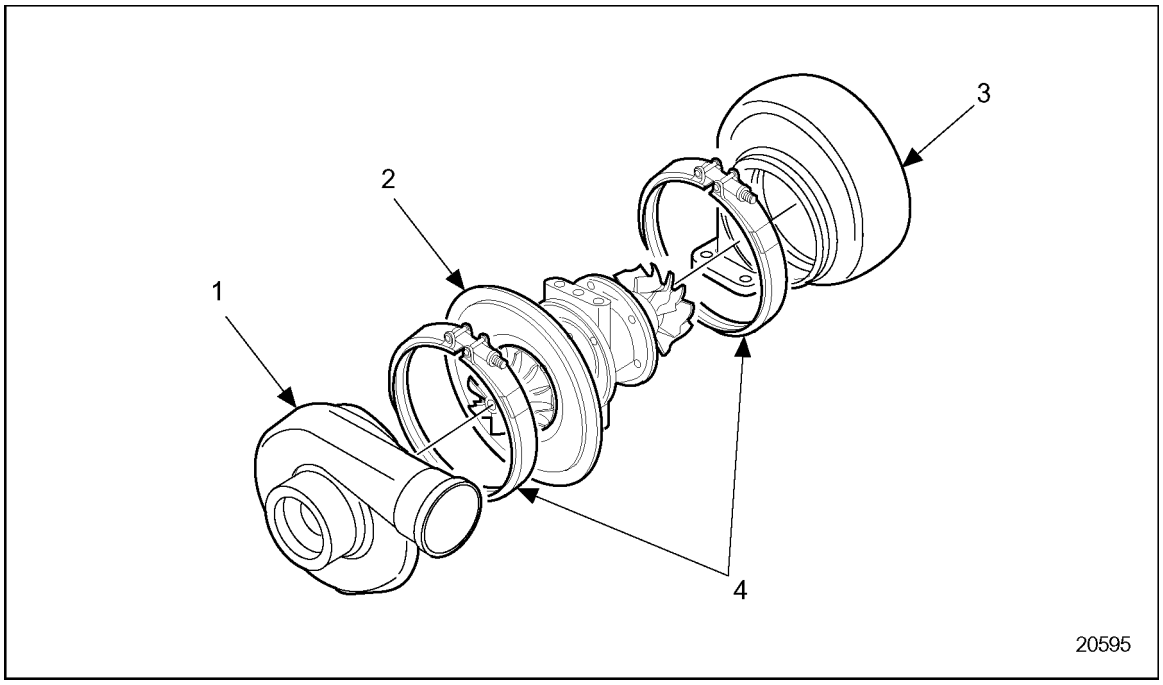

1. Compressor Housing
2. Compressor Housing and Rotating Assembly
3. Turbine Housing
4. V-band Couplings

Figure 6-23 Typical Turbocharger

 Copyright © 2004 DETROIT DIESEL CORPORATION

4. Perform the following steps to disassemble the TMF turbocharger. See Figure 6-24.
   [a] Remove the four bolts securing the turbine housing to the center housing. If they are 3/8 in. hex-head bolts, discard them and replace with new 5/8 in. hex-head bolts.
   [b] Remove the turbine housing from the center housing.

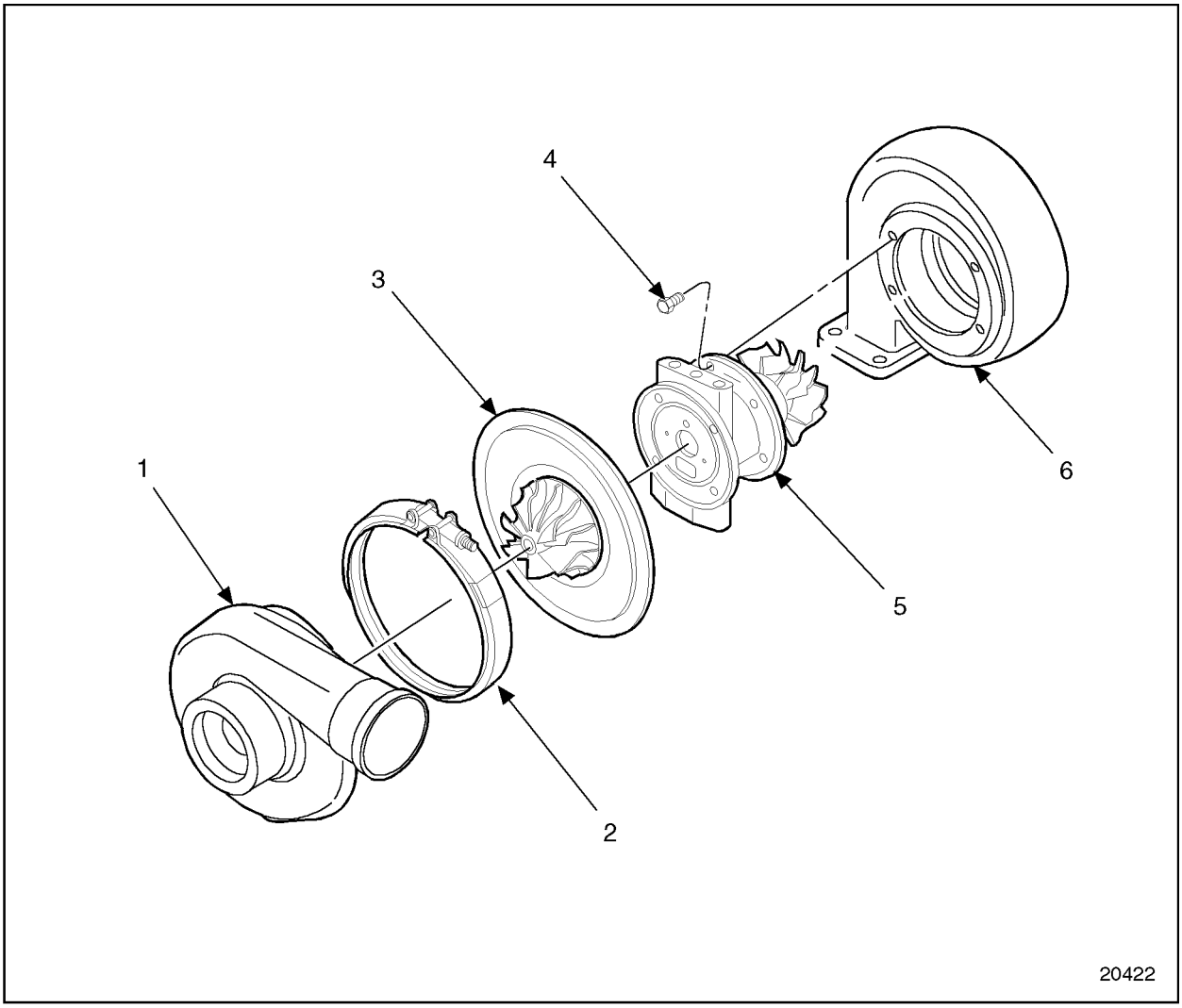

1. Compressor Housing
2. V-band Coupling
3. Compressor Housing and Rotating Assembly
4. Bolt
5. Center Housing
6. Turbine Housing

Figure 6-24 Series TMF Turbocharger

(Rev. 2004) *All information subject to change without notice.*
6SE483 0401 Copyright © 2004 DETROIT DIESEL CORPORATION

6.6.3.1 Inspection of Turbocharger

Inspect the disassembled turbocharger, discarding any damaged parts, in the following manner:

1. Visually check for nicked, crossed or stripped threads.
2. Visually check the turbine wheel shroud and turbine wheel for signs of rubbing.
3. Visually check the compressor wheel for signs of rubbing or damage from foreign material. The wheel must be free of dirt and other foreign material.
4. Check the bearing axial end play:

   [a] Clamp the center housing assembly in a bench vise equipped with soft jaws. See Figure 6-25.

   [b] Fasten the dial indicator and magnetic clamp, part of magnetic base dial indicator set, J 7872, to the center housing so that the indicator tip rests on the end of the rotating shaft on the compressor side. See Figure 6-25.

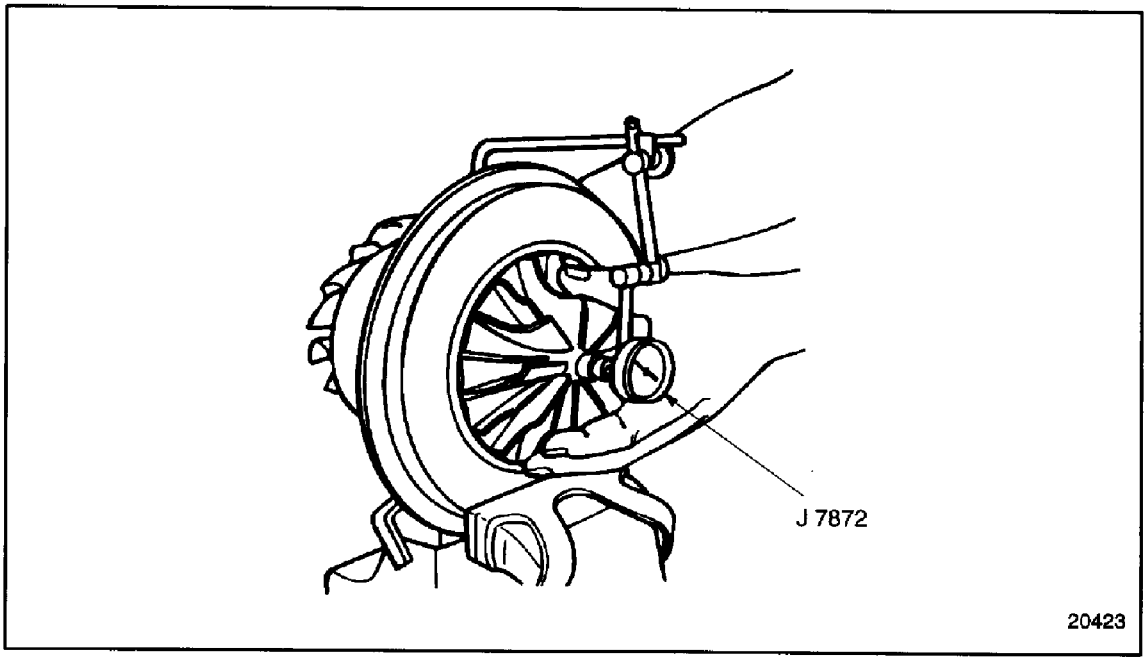

Figure 6-25 Checking Bearing Axial End Play

   [c] Move the shaft axially back and forth by hand. The total indicator reading (thrust float) should be 0.004-0.009 in. (0.1016-0.2286 mm) for TMF turbochargers. The total indicator reading should be 0.003 to 0.010 in. (0.0762-0.254 mm) for TV45 and TV51 turbochargers. If the total dial indicator readings do not fall within the specified limits, replace the rotating assembly.

 Copyright © 2004 DETROIT DIESEL CORPORATION

5. Check the shaft radial movement as follows:

   [a] Install the turbo shaft checker, J 39164, to the oil drain opening of the center section. The special curved end of the tool must contact the wheel shaft through the oil outlet port and an internal opening in the center section casting. See Figure 6-26.

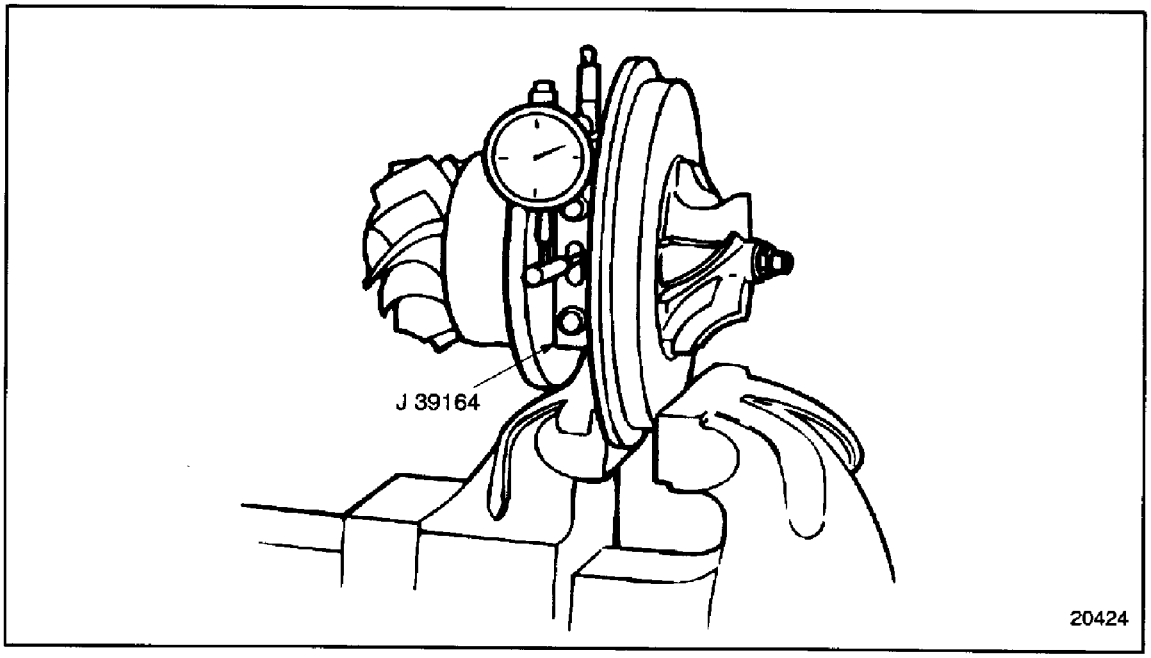

Figure 6-26 Checking Shaft Radial Movement

   [b] Install a dial indicator. See Figure 6-26.

   [c] Place the swivel adaptor, part of magnetic base dial indicator set, against the scribed line of the turbo shaft checker, J 39164.

   [d] Grasp each end of the rotating assembly and, applying equal pressure at each end, move the rotating shaft first toward and then away from the dial indicator, creating a transverse movement in the shaft. The total indicator reading (radial movement) should be 0.005 -0.007 in. for TMF turbochargers. The total indicator reading should be 0.005 -0.0065 in. (0.127-0.165 mm) for TV45 and TV51 turbochargers. If the total indicator readings do not fall within the specified limits, replace the rotating assembly.

(Rev. 2004) *All information subject to change without notice.*
6SE483 0401 Copyright © 2004 DETROIT DIESEL CORPORATION

6.6.3.2 Checking Wastegate Calibration

Check the wastegate calibration as follows:

NOTE:
Turbochargers used on some engines do not have wastegates.

1. Remove hose from wastegate actuator.
2. Using DDC tool set, TLZ00100, set up an indicator at the end of the wastegate actuator adjusting rod to measure actuator rod travel. The indicator should have a minimum travel of 2.54 mm (0.100 in.).
3. Connect regulator and pressure gage setup to wastegate actuator. See Figure 6-27.

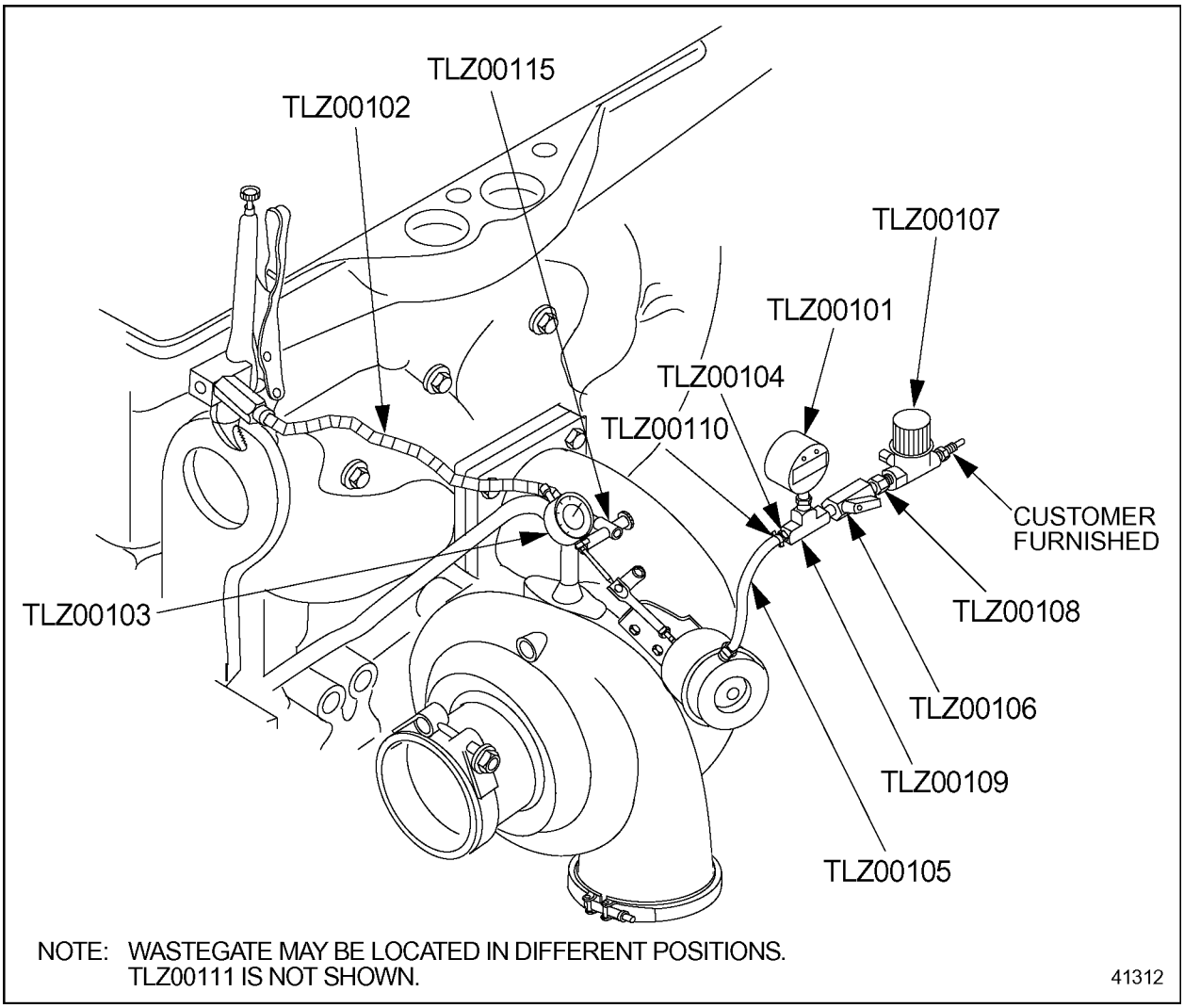

Figure 6-27 Checking Wastegate Calibration

 Copyright © 2004 DETROIT DIESEL CORPORATION

4. Apply specified calibration pressure as listed in Table 6-1, to the wastegate actuator.

Manufacturer	Model	Rating	Can Pressure	Rod Travel
Garrett®	11.1L	330–350 Hp	26.5–27.5 lb·in.^{2} (182.71-189.61 kPa)	0.040 in. (1.016 mm)
Garrett®	12.7L	330–500 Hp	30.5–31.5 lb·in.^{2} (210.29-217.19 kPa)	0.040 in. (1.016 mm)
Garrett®	14.0L	550–575 Hp	30.5–31.5 lb·in.^{2} (210.29-217.19 kPa)	0.040 in. (1.016 mm)
BorgWagner Turbo Systems®	12.7	330–430 Hp	33.97–34.03 lb·in.^{2} (234.22-234.63 kPa)	0.057–0.089 in. (1.45-2.26 mm)

Garrett® is a registered trademark of Honeywell.

BorgWagner Turbo Systems® is a registered trademark of BorgWagner Corportation.

Table 6-1 Wastegate Calibrations

5. Close air supply shutoff valve. The pressure should hold at the specified pressure. If not, check air hose and fitting connections for leaks. If none are found, replace wastegate actuator. Refer to section 6.6.4.
6. Open vent to relieve pressure. Check gage for zero pressure reading. Adjust regulator to zero pressure and close vent valve.
7. Adjust dial indicator so it just contacts the actuator rod end and adjust to zero reading.
8. Open air supply shutoff valve and slowly adjust regulator until dial indicator reads 1.016 mm (0.040 in.) for Garrett® systems and 1.45-2.26 mm (0.057–0.089 in.) for BorgWagner Tubo Systems®. Switch pressure on and off, opening and closing supply air and vent valves, to ensure dial indicator travel is from 0.00–1.016 mm (0.00–0.040 in.) for Garrett® systems or 0.00–2.26 mm (0.00–0.089 in.) for BorgWagner Turbo Systems®; and that the pressure reading is consistent.
9. For currently calibrated wastegate actuator, a pressure within ± 0.50 lb·in.^{2} (3.4 kPa) of the value listed in Table 6-1, will be required to obtain precisely the correct amount of actuator rod travel. If the pressure required is outside this range, wastegate adjustment is necessary. Refer to section 6.6.5.1.

(Rev. 2004) *All information subject to change without notice.*
6SE483 0401 Copyright © 2004 DETROIT DIESEL CORPORATION

6.6.4 Removal of Wastegate Actuator

Remove the wastegate actuator as follows:

1. Remove actuator hose from top side of actuator can. See Figure 6-27. With the pressure gage setup, apply enough pressure to the actuator can until the rod begins to move. Refer to section 6.6.5.1.
2. Remove the retaining clip that holds the actuator rod end on the worm pin. Lift rod off the wastegate lever pin.

NOTICE:
Never remove the rod end from the wastegate lever pin without applying pressure to the top side actuator port, or damage to the actuator diaphragm may result.

3. Remove the locknuts that secure the actuator can to the base of the actuator bracket and remove the can from the turbocharger assembly.

6.6.5 Installation of Wastegate Actuator

Further adjustment of the actuator will be necessary to achieve the correct pressure setting, listed in Table 6-1.

Install the wastegate actuator as follows:

1. Install actuator can on bracket; tighten locknuts.
2. Using pressure gage setup, apply enough pressure to the new service actuator can until the rod begins to move.
3. Adjust actuator rod end by turning either clockwise or counterclockwise on rod so that the rod end hole lines up with the wastegate lever arm. While wastegate is held shut, slip rod over pin.
4. Before installing retaining clip, the rod end will need to be adjusted to the correct setting. Refer to section 6.6.5.1.

 Copyright © 2004 DETROIT DIESEL CORPORATION

6.6.5.1 Setting the Wastegate

Before following this procedure, check the actuator set pressure to see if adjustment is needed. Refer to section 6.6.5.1.

Set pressure adjustment as follows:

1. Loosen the jam nut that secures the rod end on the actuator rod. If locking collar is present on the actuator rod, remove and discard collar. See Figure 6-28.

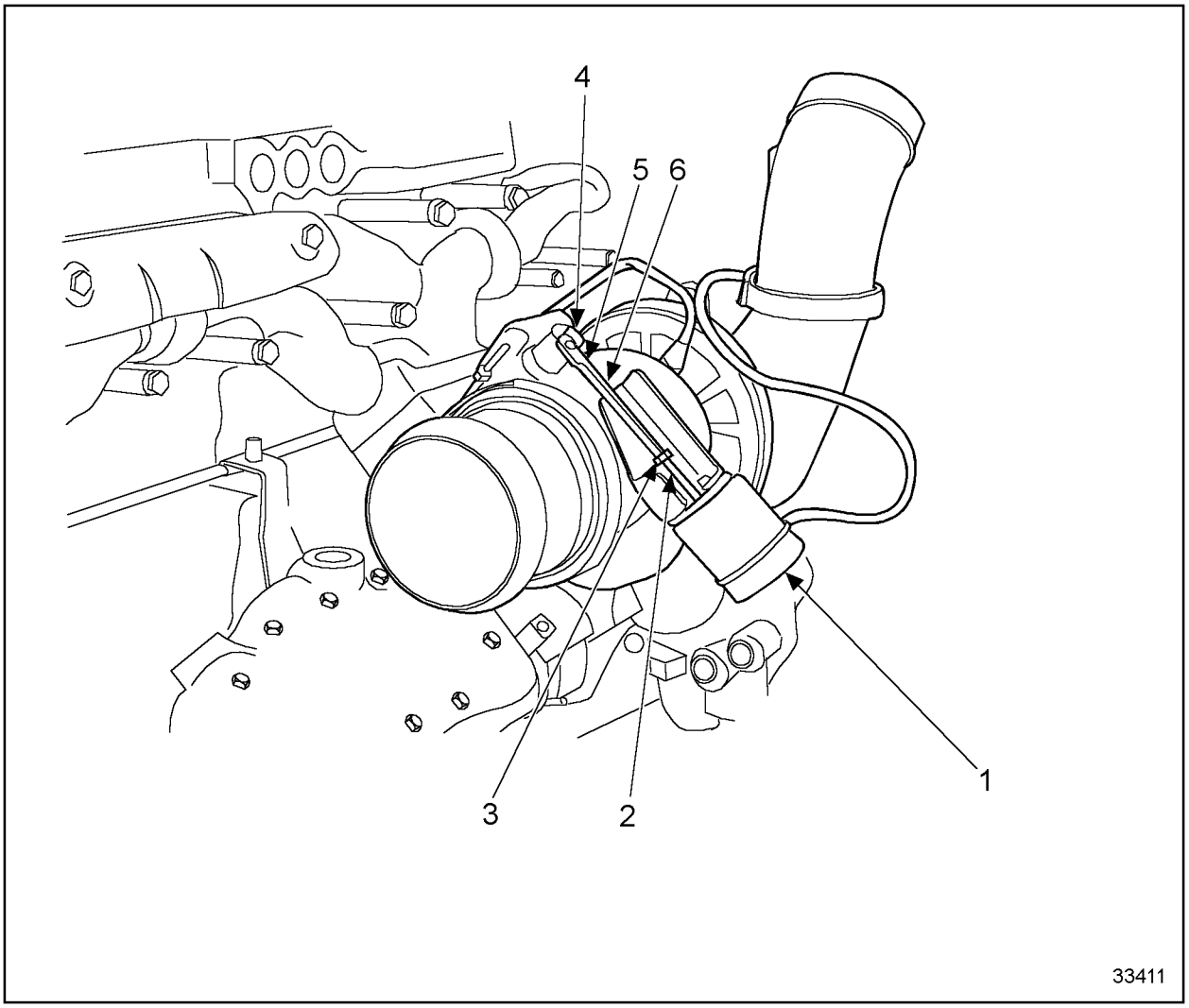

1. Wastegate Actuator Assembly
2. Locking Collar
3. Jam Nut
4. Adjusting Rod End
5. Retainer Clip
6. Wastegate Lever and Pin Assembly

Figure 6-28 Wastegate Adjustment

(Rev. 2004) *All information subject to change without notice.*
6SE483 0401 Copyright © 2004 DETROIT DIESEL CORPORATION

2. Remove the retaining clip that holds the actuator rod end on the wastegate lever arm pin.
3. Using pressure gage setup, apply enough pressure to the top side actuator can port until the rod begins to move, lifting the wastegate valve off its seal. See Figure 6-28.
4. Slip rod end off the wastegate lever arm pin.
5. Adjust rod as needed:
   [a] To INCREASE pressure setting at 0.04 in., turn rod end CLOCKWISE.
   [b] To DECREASE pressure setting at 0.04 in., turn rod end COUNTERCLOCKWISE.
6. With pressure still applied to actuator, replace rod end on wastegate lever arm.
7. Check actuator set pressure again. Refer to section 6.6.5.1.
8. If actuator is still out of adjustment, repeat this procedure.
9. If actuator is within specified set pressure, install retaining clip on wastegate lever arm pin.
10. Tighten jam nut to secure rod end.

 Copyright © 2004 DETROIT DIESEL CORPORATION

6.6.6 Assembly of Turbocharger

Use the following procedure to assemble the turbocharger:

NOTICE:
As the parts are assembled, cover the openings to prevent entry of dirt or other foreign material, which may cause component damage.

1. Cover all openings.
2. Position the turbine housing as marked at disassembly against the center housing and secure it in place.
3. If a TMF turbocharger is to be assembled, proceed to step 5.

NOTICE:
Failure to properly orient the Tee-bolt end of the clamp can result in an exhaust leak, turbine wheel damage or both.

4. To assemble the TV45 and TV51 turbochargers, position the V-band coupling between the turbine housing and center housing so that the Tee-bolt end does not interfere with the turbine housing. Then tighten the V-band coupling nut, as follows:
   [a] Lubricate the toggle bolt threads with a high temperature anti-seize compound.
   [b] Tighten the nut on the V-band toggle bolt to approximately 18 N·m (160 lb· in.) torque.

NOTE:
Do not pull a misaligned turbine housing into alignment with the V-band coupling. The parts must be aligned and seated first.

   [c] Loosen the V-band coupling nut to approximately 6 N·m (50 lb· in.) torque, then torque the nut to 12-15 N·m (106-130 lb· in.).
5. Position the compressor housing as marked at disassembly against the backplate assembly and secure it in place with the V-band coupling.
6. Lightly lubricate the threads of the toggle bolt with engine oil and tighten the nut to 12-15 N·m (106-130 lb· in.) torque. This completes the assembly of TV45 and TV51 turbochargers.

(Rev. 2004) *All information subject to change without notice.*
6SE483 0401 Copyright © 2004 DETROIT DIESEL CORPORATION

NOTICE:
The 5/8 in. hex-head turbine housing bolts replaced 3/8 in. hex-head bolts. The 5/8 in. hex-head bolts are required to ensure sufficient clamp load.

7. Secure the TMF turbine housing with four 5/8 in. hex-head bolts.
8. Tighten the bolts to 34 N·m (300 lb· in.) torque.

6.6.7 Installation of Turbocharger

To install the turbocharger:

1. Attach a chain hoist and a suitable lifting sling to the turbocharger assembly.
2. Remove any covers that were placed over the openings of the air inlet and exhaust outlet openings on the engine and turbocharger when the turbocharger was removed.
3. Remove any covers on the oil inlet and drain lines, and the oil inlet and drain openings on the turbocharger.
4. Place the turbocharger assembly into position on the exhaust manifold. Use a new gasket between the exhaust manifold and the turbine housing flange.
5. Secure the turbocharger to the exhaust flange. Tighten the nuts just enough to hold the turbocharger in place.
6. Slide the charge air cooler air inlet tube hose over the compressor housing outlet opening and secure it in place with the hose clamps.

 Copyright © 2004 DETROIT DIESEL CORPORATION

CAUTION:

To avoid injury from the sudden release of a high-pressure hose connection, wear a face shield or goggles.

NOTE:
Do not use any type of lubricant on the inside of any air inlet hose or on the hose contact surfaces of the turbocharger compressor housing, CAC ducting or the intake manifold.

7. Tighten the turbocharger to exhaust manifold locknuts to 58-73 N·m (43-54 lb·ft) torque.
8. Install the oil drain line, using a new gasket, between the opening in the bottom side of the turbocharger center housing and the drain hose that runs to the cylinder block. Tighten the bolts to 30-38 N·m (22-28 lb·ft) torque.
9. If turbocharger is water cooled, install the coolant supply and return hoses.
10. Refer to section 11.3 for verification of proper turbocharger installation.

For Series 60 engines with Exhaust Gas Recirculation (EGR) systems install the VNT turbocharger as follows:

1. Place base gasket over studs on exhaust manifold.
2. Place turbocharger over studs.
3. Install four M10 nuts and washers and torque to 49 N·m (36 lb·ft).
4. Connect air line to VNT actuator and torque to 20 N·m (14 lb·ft).
5. Install turbocharger compressor outlet temperature sensor.
6. Install turbocharger speed sensor.
7. Connect air line from variable pressure output device (VPOD) to actuator on VNT.

6.6.8 EGR Cooler Removal

For Series 60 engines equipped with EGR systems remove EGR Cooler as follows:

CAUTION:

To avoid injury from hot surfaces, allow engine to cool before removing any component. Wear protective gloves.

1. Remove two bolts and seal ring from water pump outlet elbow. Discard seal ring.
2. Remove water pump outlet elbow from hose on EGR water inlet.
3. Remove hose and clamps from EGR Cooler water inlet.
4. Slide clamp onto hose of oil cooler water inlet.

(Rev. 2004) *All information subject to change without notice.*
6SE483 0401 Copyright © 2004 DETROIT DIESEL CORPORATION

5. Remove turnbuckle clamp, S-Pipe and EGR Valve assembly from EGR Cooler inlet. See Figure 6-29.

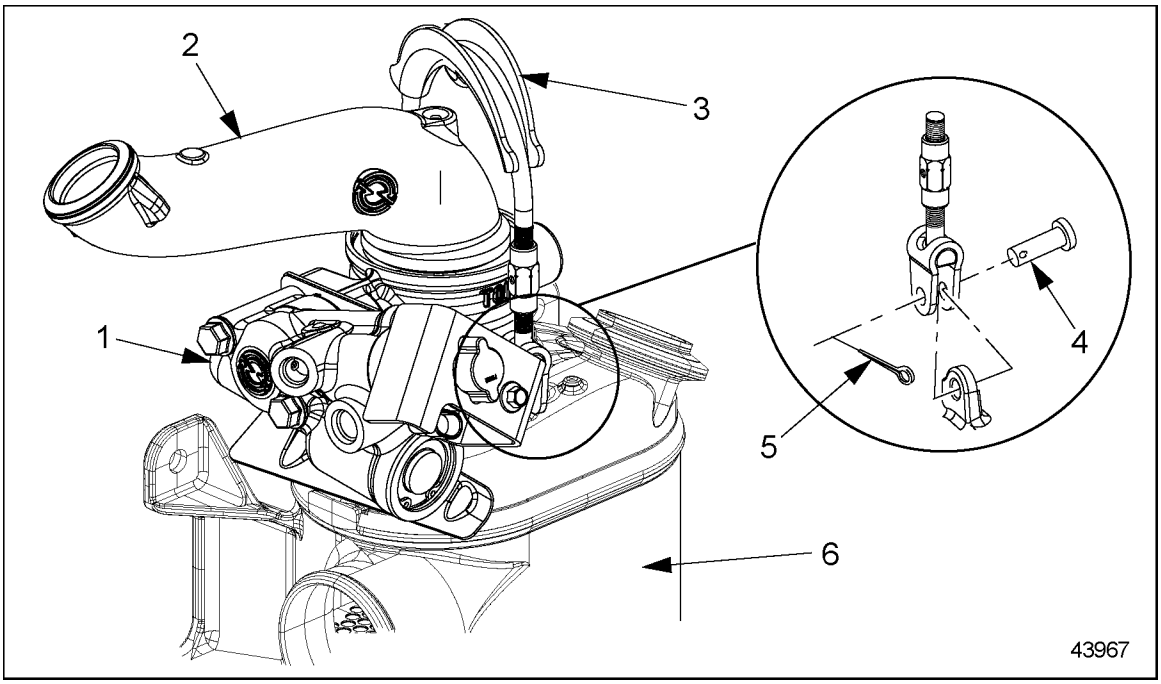

1.EGR Valve Assembly
2. S-Pipe
3. Turnbuckle Clamp
4. Clevis Pin
5. Cotter Pin
6. EGR Cooler

Figure 6-29 EGR Cooler and Related Parts

 Copyright © 2004 DETROIT DIESEL CORPORATION

6. Remove Delivery Pipe clamp from EGR Cooler outlet. See Figure 6-30.

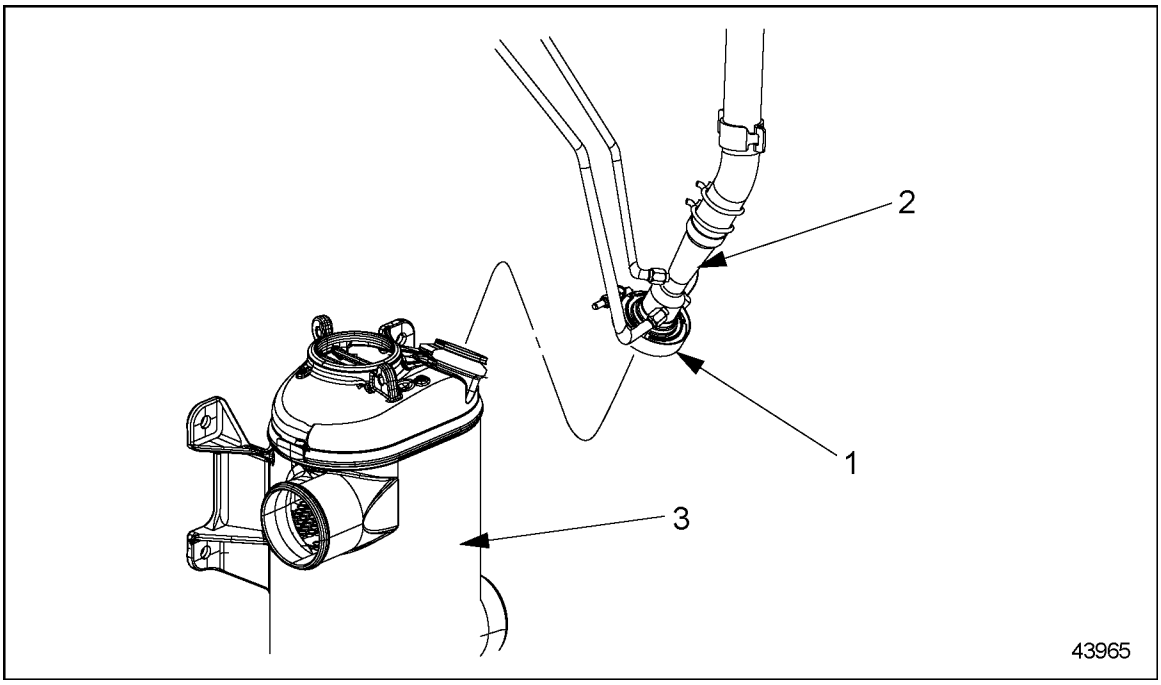

1. Clamp
2. Delivery Pipe
3. EGR Cooler

Figure 6-30 EGR Cooler and Delivery Pipe

CAUTION:

To avoid injury when removing or installing a heavy engine component, ensure the component is properly supported and securely attached to an adequate lifting device to prevent the component from falling.

7. Remove four bolts attaching EGR Cooler backplate to engine block.
8. Remove hose and clamp from oil cooler water inlet.

6.6.9 EGR Cooler Installation

Series 60 engines equipped with EGR systems have a EGR Cooler which cools the exhaust gas prior to introduction in the Intake Manifold.

Install the EGR Cooler as follows:

1. Install hose and clamps over oil cooler water inlet.
2. Insert EGR Cooler water outlet into hose on oil cooler inlet.
3. Align EGR Cooler back plate holes with four bosses on cylinder block.

(Rev. 2004) *All information subject to change without notice.*
6SE483 0401 Copyright © 2004 DETROIT DIESEL CORPORATION

4. Thread four M10 bolts through back plate and into cylinder block.
5. Tighten bolts to 46-52 N·m (34-38 lb·ft).
6. Install hose and clamps onto EGR Cooler water inlet see Figure 6-31.

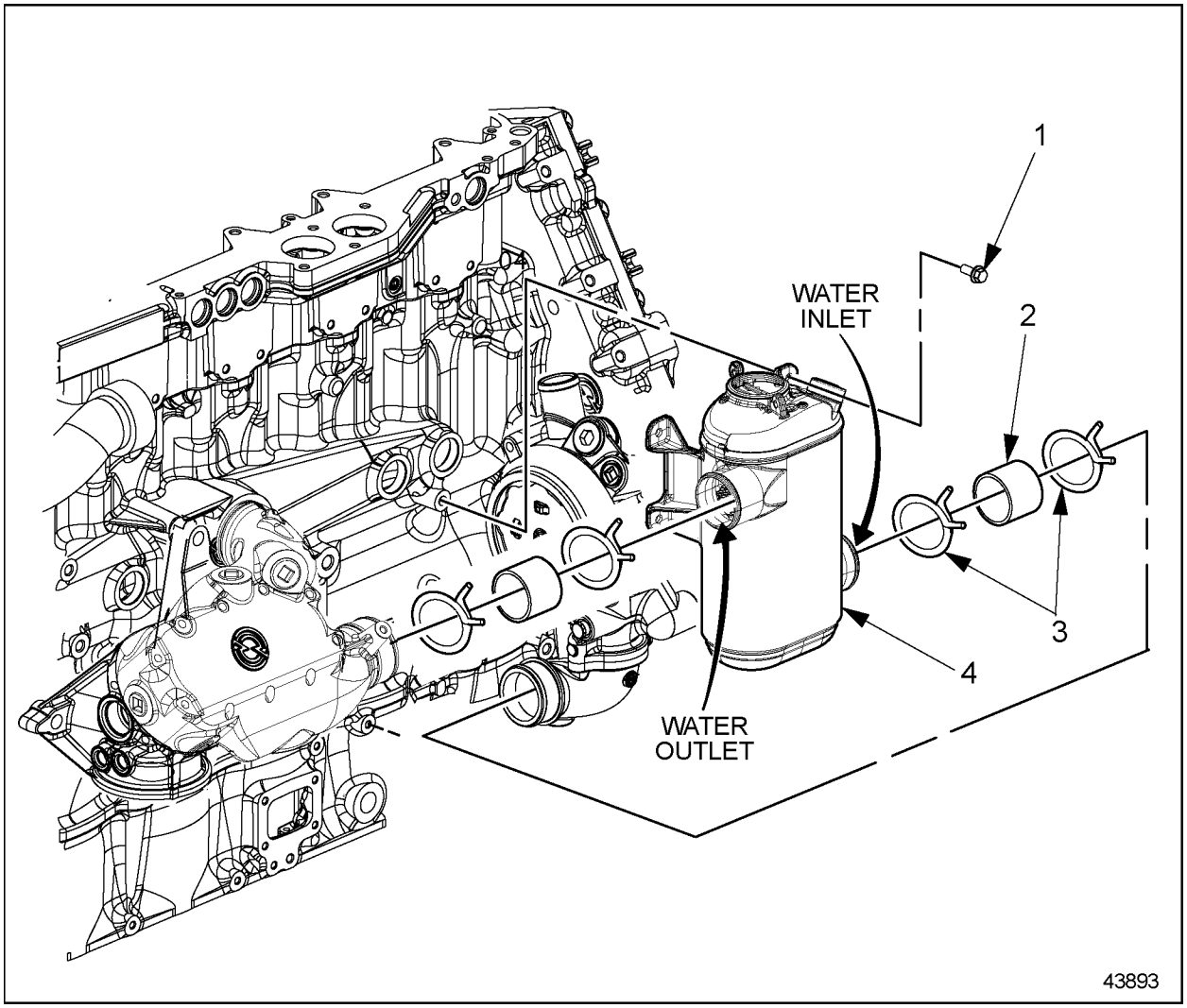

1. Bolt
2. Hose
3. Clamp
4. EGR Cooler

Figure 6-31 EGR Cooler and Related Parts

7. Insert water pump outlet elbow into hose on EGR cooler water inlet.
8. Install new seal ring and water pump elbow on water pump with two M10 bolts torque bolts to 58-73 N·m (43-54 lb·ft).

6.6.10 S-Pipe and EGR Valve Removal

For Series 60 Engines equipped EGR systems remove S-Pipe and EGR Valve as follows:

 Copyright © 2004 DETROIT DIESEL CORPORATION

⚠ CAUTION:

To avoid injury from hot surfaces, allow engine to cool before removing any component. Wear protective gloves.

1. Remove nut, spherical washer and crab from M8 stud securing S-pipe to exhaust manifold.
2. Loosen turnbuckles.
3. Remove clevis and clip pins securing turnbuckle clamp to EGR Cooler, remove turnbuckle clamp and S-Pipe.
4. Remove oil inlet and outlet fittings from actuator assembly, remove EGR Valve and actuator assembly. See Figure 6-32.

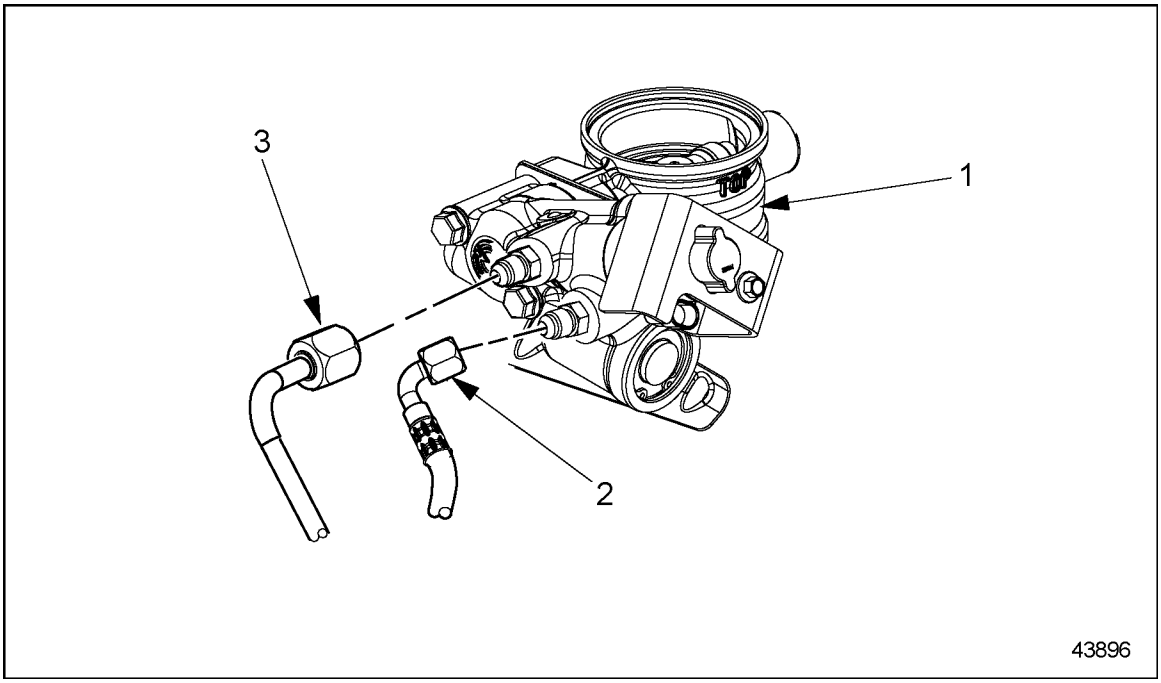

1. EGR Valve and Actuator Assembly
2. Oil Outlet Hose and Fitting
3. Oil Inlet Hose and Fitting

Figure 6-32 EGR Valve and Actuator Assembly

6.6.11 Disassembly of the EGR Valve and Actuator Assembly

Disassemble the EGR Valve and Actuator assemblies as follows:

(Rev. 2004) *All information subject to change without notice.*
6SE483 0401 Copyright © 2004 DETROIT DIESEL CORPORATION

NOTICE:

The actuator assembly can be separated from the EGR Valve assembly, however there should not be any further disassembly. **DO NOT disassemble the actuator or EGR valve assemblies.**

1. Remove two bolts securing actuator assembly, heat and insulator shields to EGR Valve assembly.
2. Disassemble the EGR valve assembly from the actuator assembly.

6.6.11.1 Cleaning of the EGR Valve and Actuator Assembly

Clean the internal spline drive on the actuator assembly and external spline on the valve shaft as follows:

1. Brush splines to loosen debris.

CAUTION:

To avoid injury from flying debris when using compressed air, wear adequate eye protection (face shield or safety goggles) and do not exceed 40 psi (276 kPa) air pressure.

2. Remove any loose debris with compressed air.

6.6.11.2 Inspection of the EGR Valve and Actuator Assembly

Inspect the EGR Valve and Actuator Assembly as follows:

1. Visually inspect actuator and valve assemblies for excessive wear.
2. If the EGR valve or actuator assemblies are defective replace with a new assembly.
3. If the EGR valve or actuator assemblies are not defective reuse the assembly.

6.6.12 Assembly of the EGR Valve and Actuator Assemblies

Assemble the EGR valve and actuator as follows:

NOTICE:

The insulator shield must be replaced whenever the actuator assembly is disassembled from the EGR valve assembly. The heat shield can be reused.

NOTE:
The spline drive for the actuator assembly is keyed to ensure proper alignment with the shaft on the valve assembly.

 Copyright © 2004 DETROIT DIESEL CORPORATION

1. Install the actuator assembly, heat and insulation shields onto the splined shaft of the EGR valve assembly. **DO NOT FORCE.** See Figure 6-33.

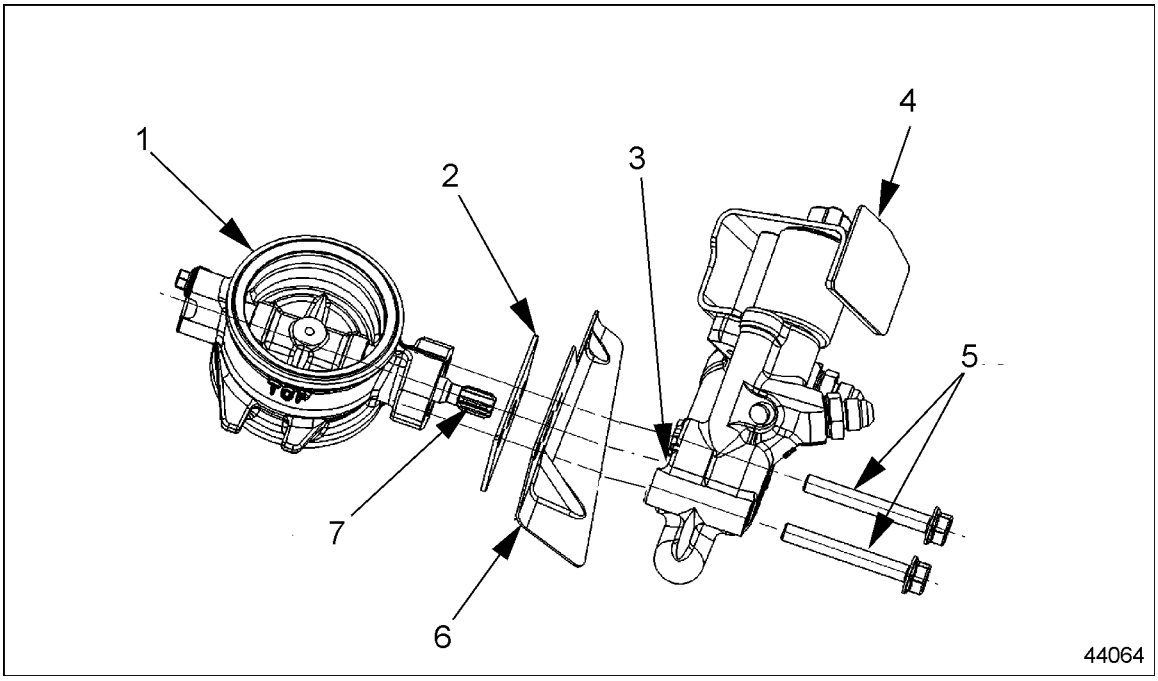

1. Valve and Insert Assembly
2. Insulator Shield
3. Splined Internal Drive
4. Actuator Assembly
5. Bolts
6. Heat Shield
7. Splined External Shaft

Figure 6-33 Actuator and EGR Valve and Related Parts

2. Install two bolts into the actuator and EGR valve.
3. Torque bolts evenly to ensure EGR valve and actuator assemblies are not misaligned. Misalignment will cause the assemblies to bind.
4. Torque bolts to 24-28 N·m (18-21 lb·ft).

6.6.13 S-Pipe and EGR Valve Installation

Exhaust gas flows from the exhaust manifold through the S-pipe and EGR valve to the cooler. This system includes three spherical slip joints to allow motion between the exhaust manifold and cooler due to assembly varition, vibration and thermal growth. The three joints are coated with a special material that allows for relative movement between parts while still maintaining a seal and minimizing wear.

Install the S-Pipe as follows:

1. If the exhaust manifold stud has not been installed use the following procedure:

(Rev. 2004) *All information subject to change without notice.*
6SE483 0401 Copyright © 2004 DETROIT DIESEL CORPORATION

[a] Apply antiseize to threads on the M8 stud and install in the threaded hole near the EGR port on the bottom of the exhaust manifold.

[b] Torque to 25-30 N·m (18-22 lb·ft).

2. If removed install exhaust manifold on the engine. Refer to Section 7.2.
3. Loosely install crab, spherical washer and nut on the M8 stud.
4. Install the turnbuckle clamp on the cooler using clevis and clip pins. The turnbuckles on either side of the clamp should be extended; each turnbuckle nut should be engaged by a few threads. See Figure 6-34.

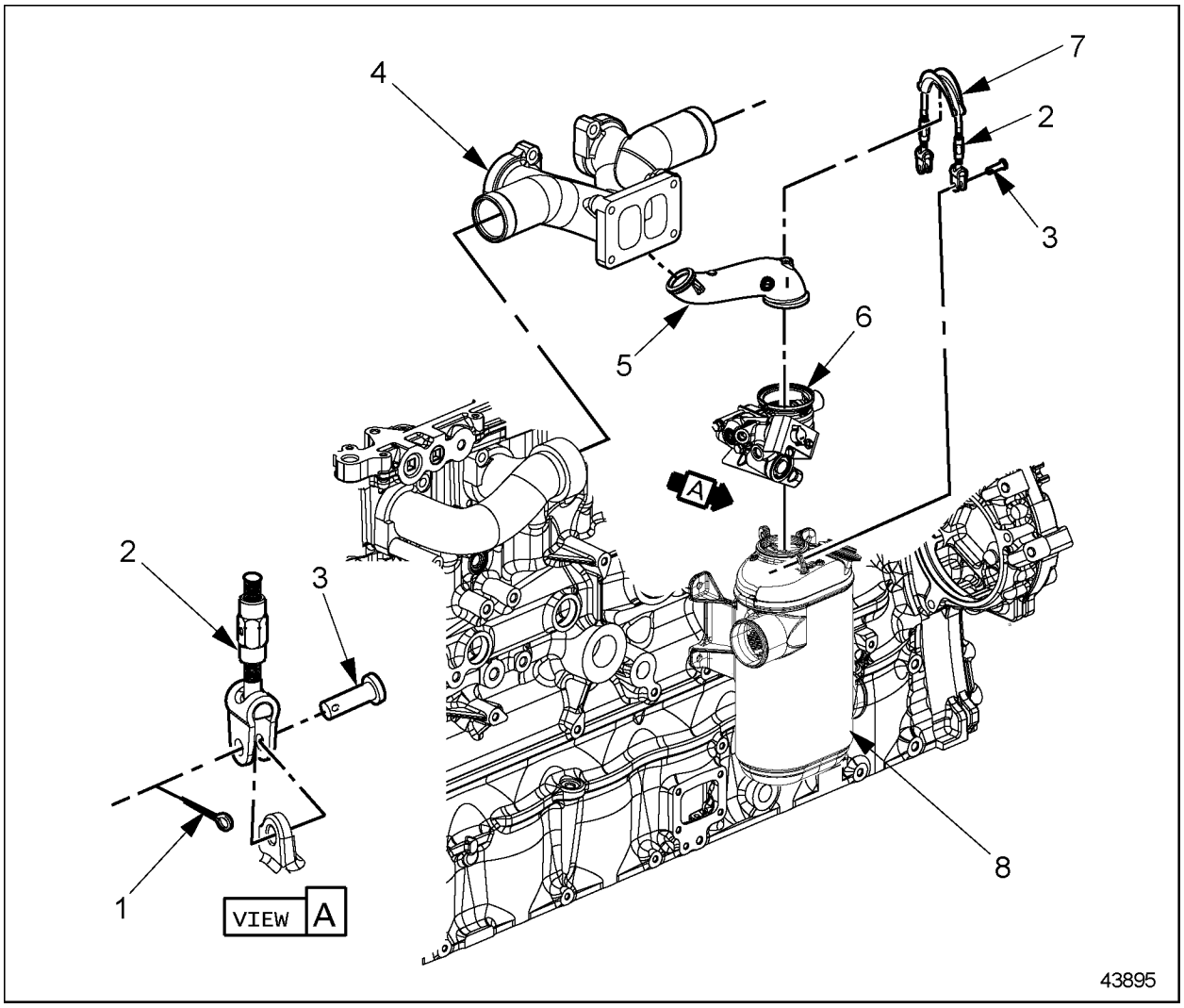

1. Clip Pin
2. Turnbuckle
3. Clevis Pin
4. Exhaust Manifold
5. S-Pipe
6. EGR Valve and Actuator Assembly
7. Turnbuckle Clamp
8. EGR Cooler

Figure 6-34 Turn Buckle Clamp Assembly

 Copyright © 2004 DETROIT DIESEL CORPORATION

5. Slide and rotate the S-pipe into position with hold down tabs under the crab. See Figure 6-37.

NOTICE:
Inspect spherical sealing surfaces for scratches. Replace hardware if deeply scratched or galled.

NOTE:
The valve **TOP** is indicated on the casting. See Figure 6-35.

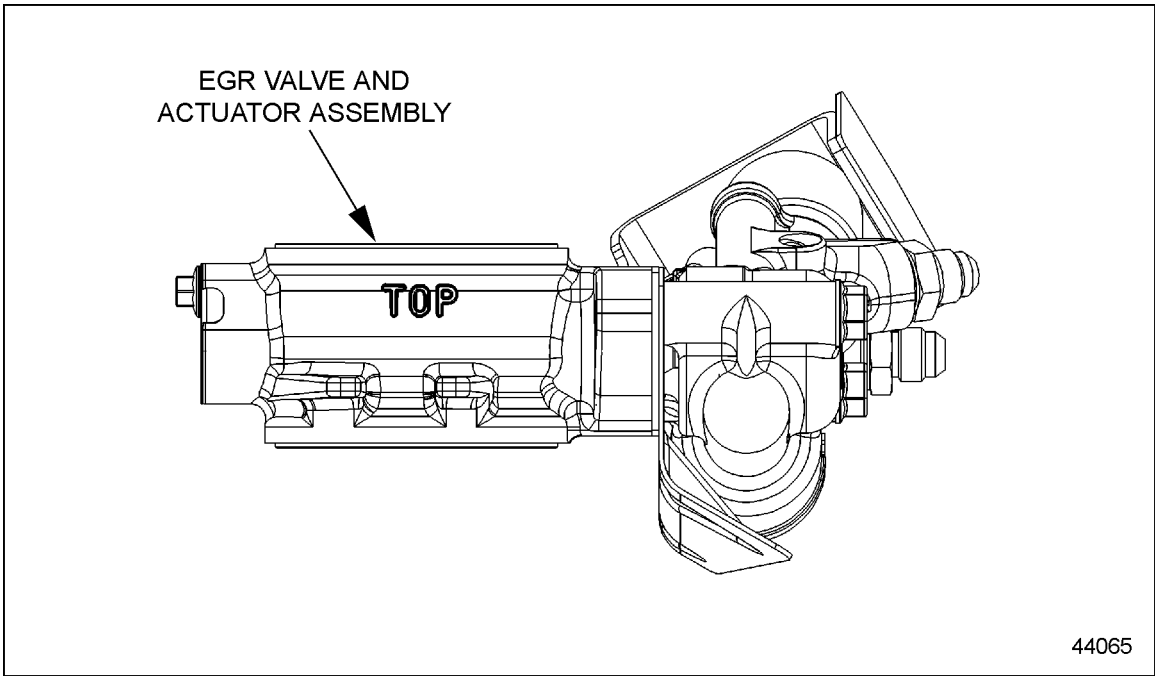

Figure 6-35 EGR Valve and Actuator Assembly

(Rev. 2004) *All information subject to change without notice.*
6SE483 0401 Copyright © 2004 DETROIT DIESEL CORPORATION

6. Slide and rotate the EGR valve into position between the S-pipe and cooler. See Figure 6-36.

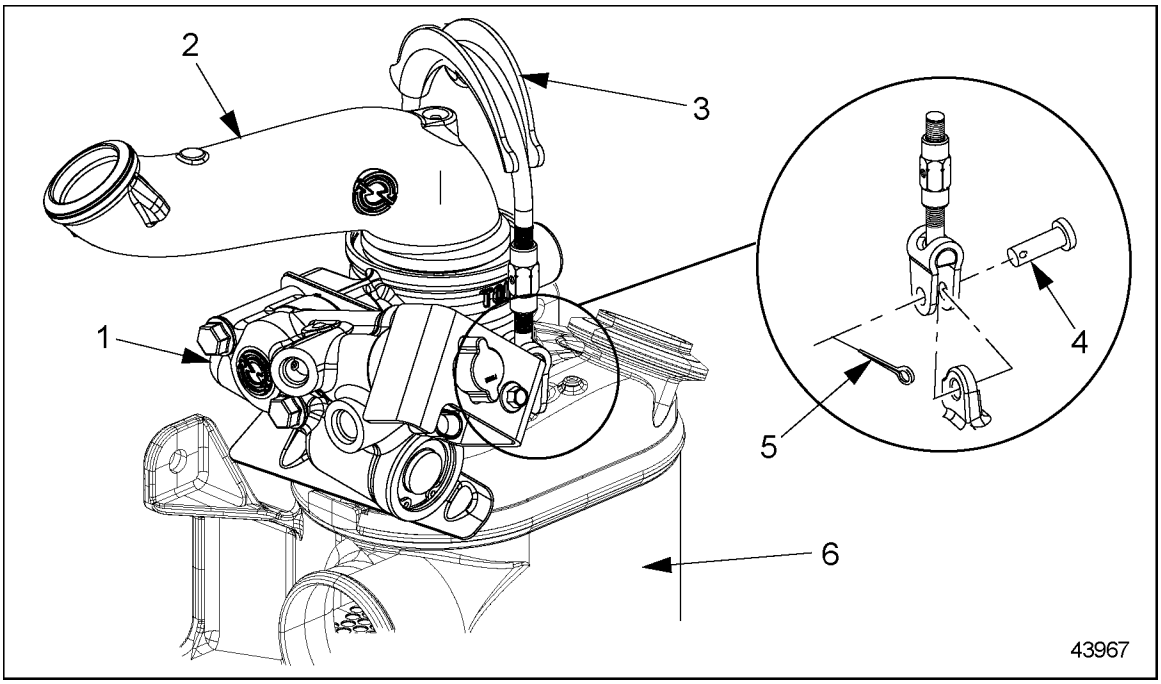

1. EGR Valve Assembly
2. S-Pipe
3. Turnbuckle Clamp
4. Clevis Pin
5. Cotter Pin
6. EGR Cooler

Figure 6-36 EGR Cooler and Related Parts

 Copyright © 2004 DETROIT DIESEL CORPORATION

7. Rotate the turnbuckle clamp up and over the S-pipe so that the clamp's saddle rests in the bowl on top of the S-pipe.
8. Tighten the nuts on the turnbuckle by hand, making sure that both turnbuckle nuts are tightened equally. If one side is tightened more than the other, the EGR valve will be pulled out of alignment, and the exhaust gas path will not be sealed. Leave the nuts finger tight.
9. Finger tighten the nut on the crab at the other end of the S-Pipe.
10. Shift the S-pipe back and forth to ensure that the spherical joints are properly seated and the parts are aligned. When the manifold, S-pipe, EGR valve and EGR cooler are in alignment, the crab nut and turnbuckle clamp can be tightened.
11. Torque the crab nut to 25-30 N·m (18-22 lb·ft).
12. Tighten the turnbuckle clamp, turning each nut equally. Stop tightening the clamp when the torque on the outer nut reaches 25-30 N·m (18-22 lb·ft). See Figure 6-37.

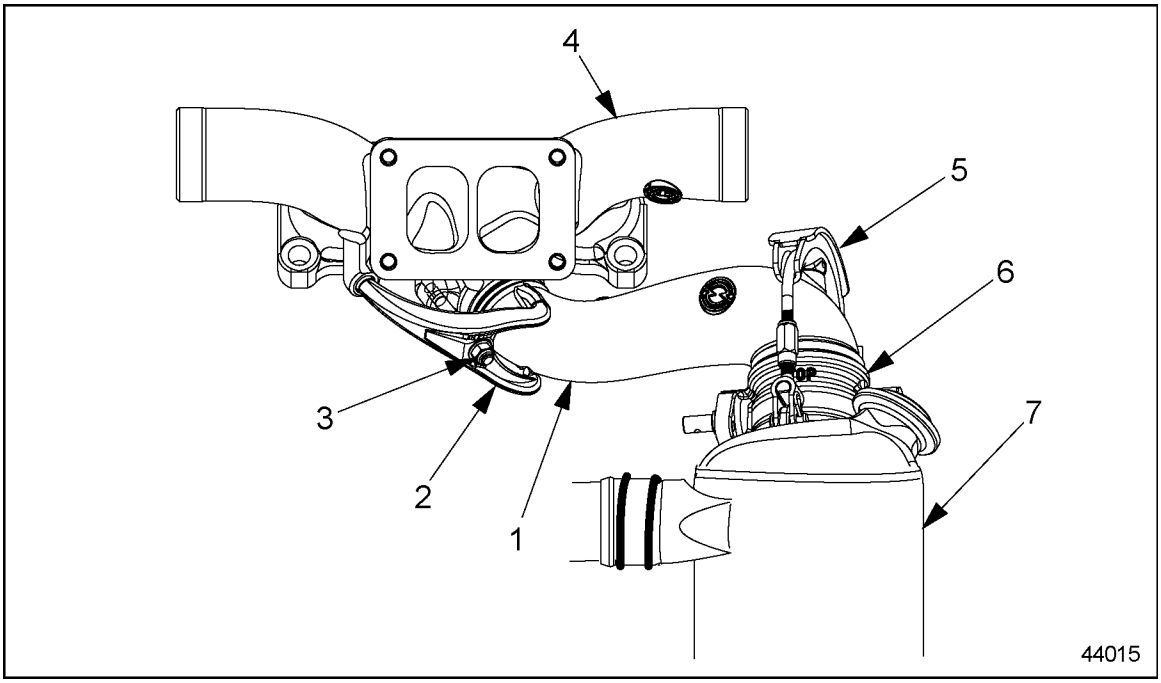

1. S-Pipe
2. Crab
3. Nut and Spherical Washer
4. Exhaust Manifold
5. Turnbuckle Clamp
6. EGR Valve
7. EGR Cooler

Figure 6-37 EGR Assembly and Related Parts

(Rev. 2004) *All information subject to change without notice.*
6SE483 0401 Copyright © 2004 DETROIT DIESEL CORPORATION

NOTICE:
Particle debris in the lubrication inlet and outlet ports of the actuator assembly can cause performance problems. Use care to keep any debris out of the actuator and oil lines when servicing. See Figure 6-38.

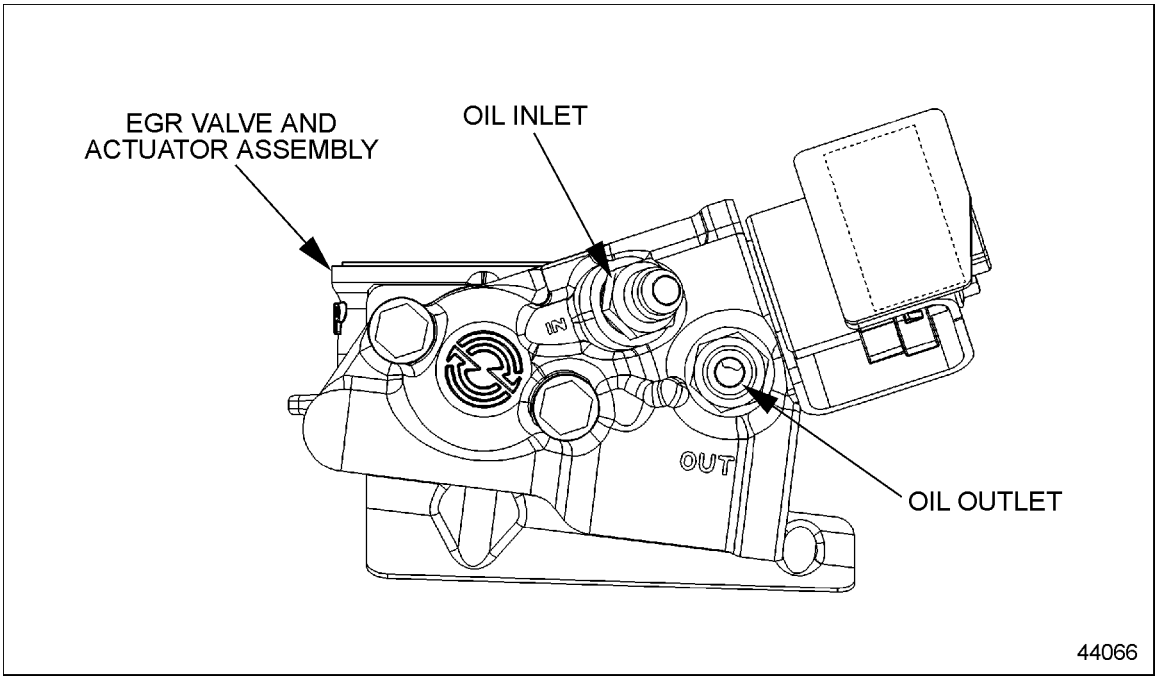

Figure 6-38 EGR Valve and Actuator Oil Inlet and Outlet Locations

 Copyright © 2004 DETROIT DIESEL CORPORATION

13. Install oil inlet and outlet fittings on actuator assembly and torque to 24-28 N·m (18-21 lb·ft). See Figure 6-39.

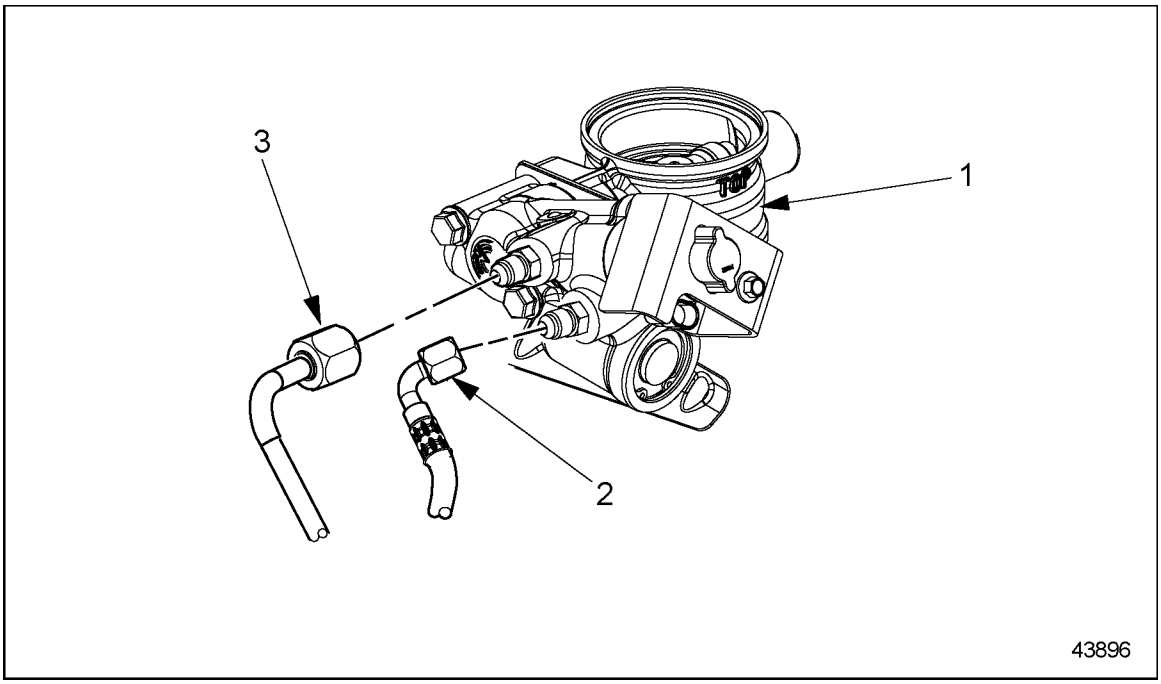

1. EGR Valve and Actuator Assembly
2. Oil Inlet Hose and Fitting
3. Oil Outlet Hose and Fitting

Figure 6-39 EGR Valve Assembly with Oil Lines

(Rev. 2004) *All information subject to change without notice.*
6SE483 0401 Copyright © 2004 DETROIT DIESEL CORPORATION

6.6.14 EGR Delivery Pipe Removal

For Series 60 engines equipped with EGR systems remove Delivery Pipe as follows:

⚠ CAUTION:

To avoid injury from hot surfaces, allow engine to cool before removing any component. Wear protective gloves.

1. Remove bolts from L-brackets on top of camshaft gear cover. Remove the bolt and nut from the two P-clips. See Figure 6-40.

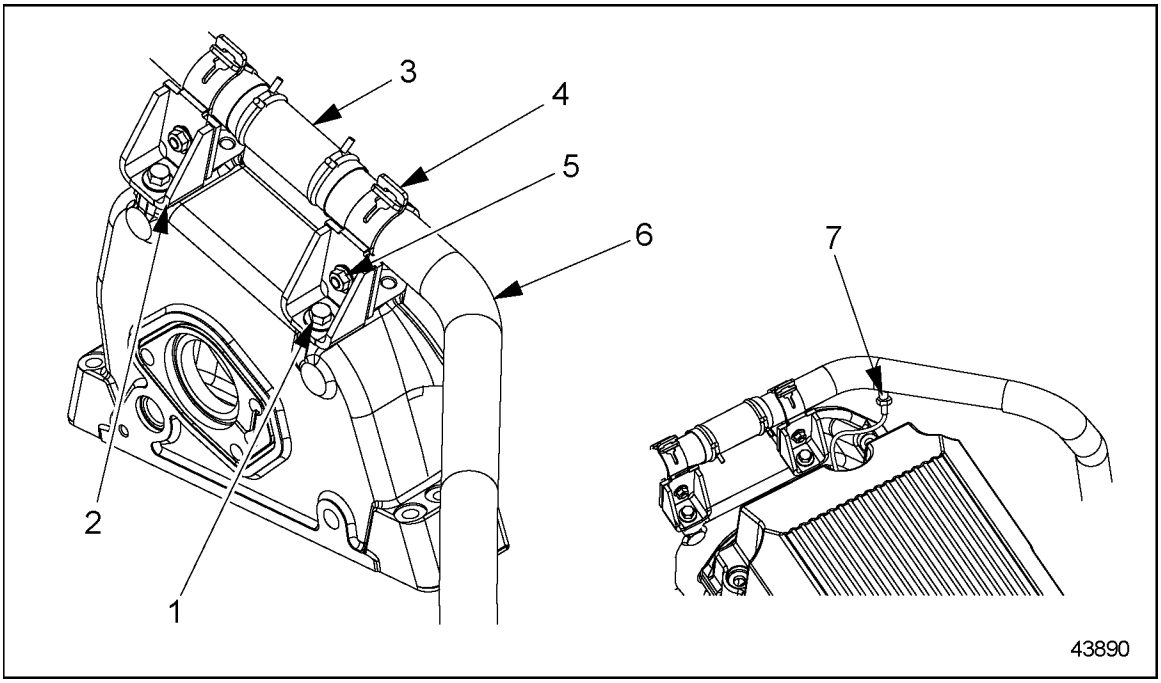

1. Bolt
2. L-Bracket
3. Hose
4. P-Clip
5. Nut
6. Delivery Pipe
7. EGR Temperature Sensor

Figure 6-40 Delivery Pipe and Related Parts

2. Remove EGR temperature sensor from delivery pipe. See Figure 6-40.

 Copyright © 2004 DETROIT DIESEL CORPORATION

3. Remove bolt securing P-Clip and S-bracket to heat shield on exhaust manifold. See Figure 6-41.

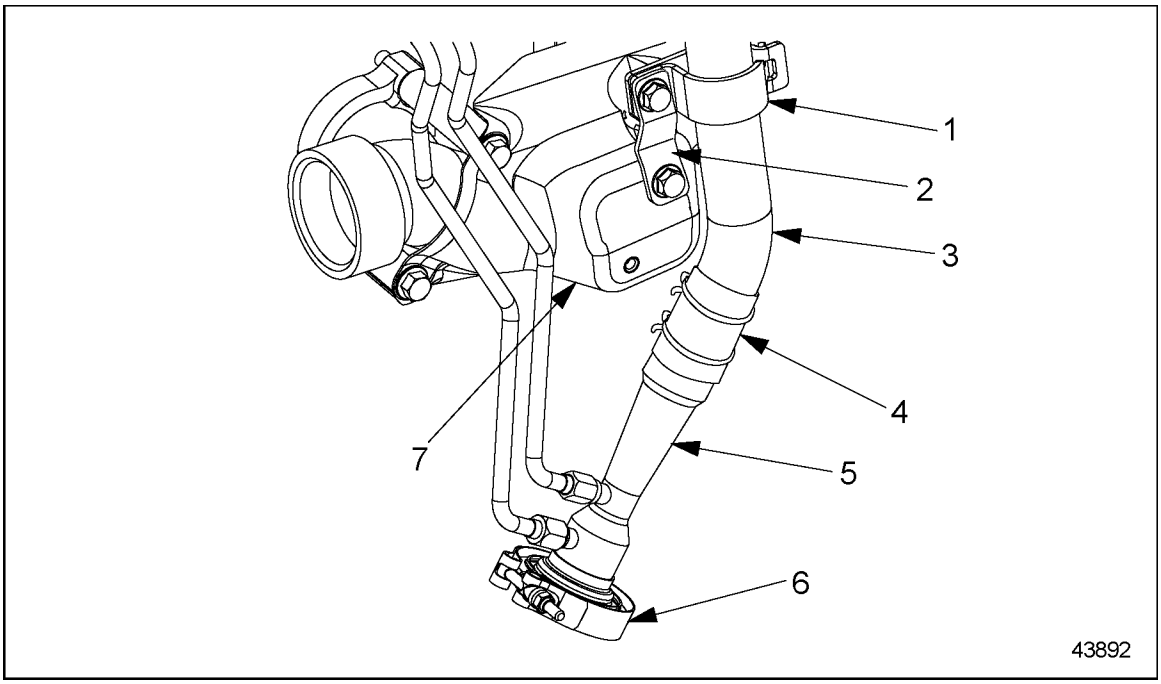

1. P-Clip
2. S-Bracket
3. Mid-Section
4. Hose
5. Venturi-Section
6.Clamp
7. Exhaust Manifold Heat Shield

Figure 6-41 Delivery Pipe and Related Parts

4. Remove clamp at delivery tube (small end) to cooler outlet flange.
5. Disconnect Delta-P tubes at delivery pipe.

(Rev. 2004) *All information subject to change without notice.*
6SE483 0401 Copyright © 2004 DETROIT DIESEL CORPORATION

6. Remove clamp at mixer end (large end) of delivery pipe to intake manifold. See Figure 6-42.

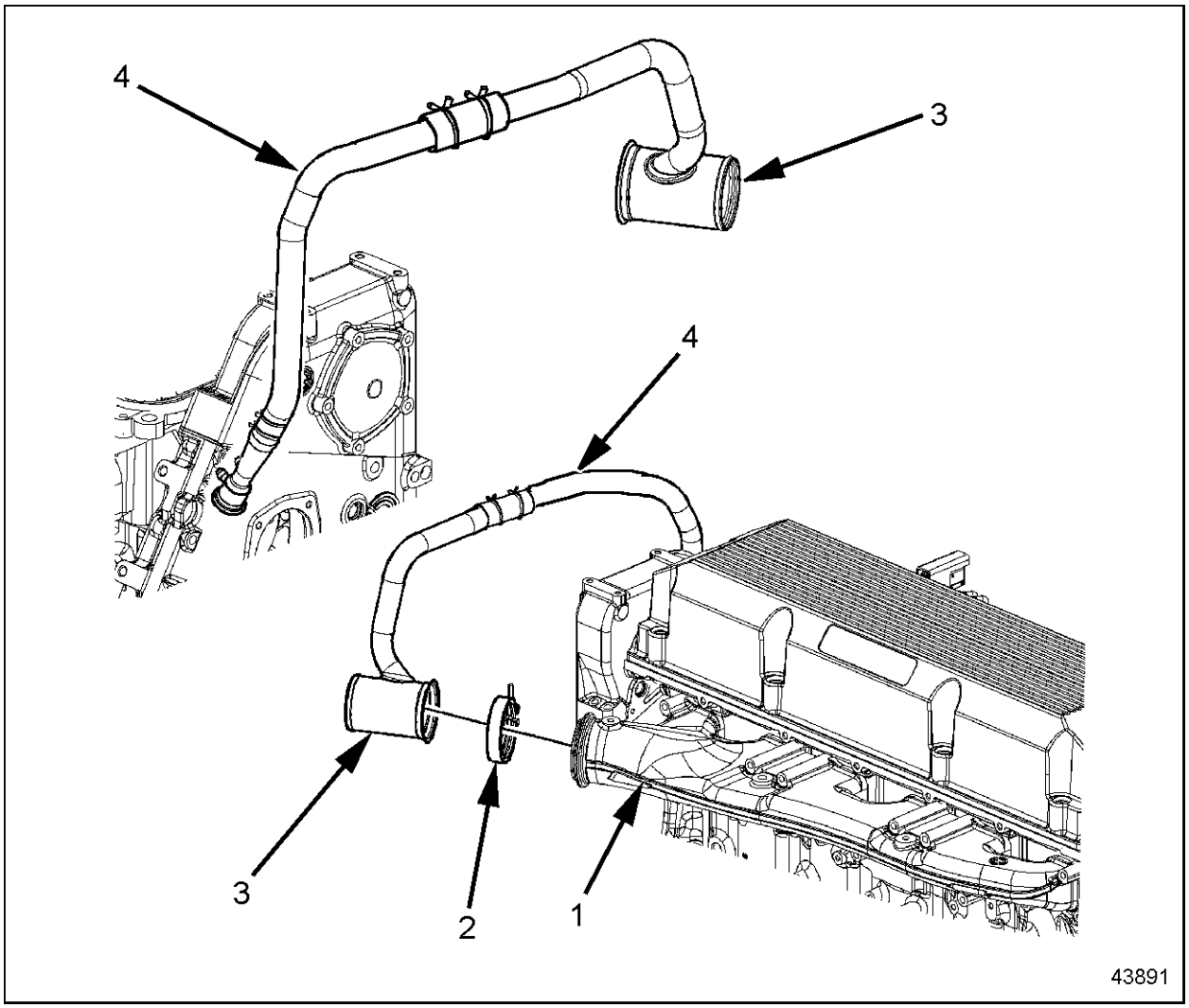

1. Intake Manifold
2. Mixer Clamp
3. Mixer
4. Delivery Pipe

Figure 6-42 Delivery Pipe and Related Parts

6.6.15 Removal of Delivery Pipe Hose

The Series 60 2004 Exhaust Gas Recirculation (EGR) engine utilizes a three piece delivery pipe. The delivery pipe uses a mixer-section, mid-section, venturi-section and two hose connections with attaching clamps. In the event the hose connections need replacement use the following procedure.

To replace hose connections procede as follows:

1. Remove EGR delivery pipe from engine refer to section 6.6.14.

 Copyright © 2004 DETROIT DIESEL CORPORATION

2. Open clamps and remove hose from mixer-section and mid-section, remove hose from mid-section and venturi-section.

6.6.16 Installation of Delivery Pipe Hose

To install hose connections procede as follows:

NOTICE:
If hose clamps have been removed from delivery pipe, they must be reinstalled prior to hose installation.

NOTICE:
Ensure when installed on the hose, clamps are seated against the beads on the delivery pipe mixer section, mid-section and venturi-section. Do Not over stretch clamp, open enough to clear hose. See figure 6-43 and see Figure 6-44.

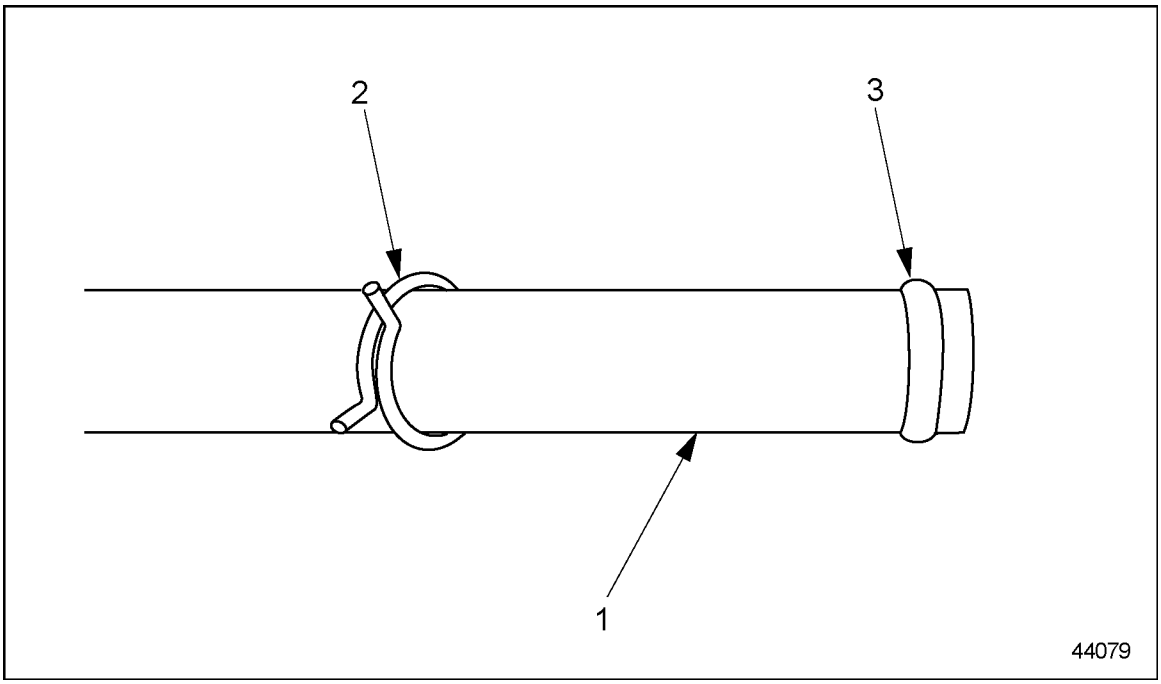

1. Delivery Tube
2. Hose Clamp
3. Pipe Bead

Figure 6-43 EGR Delivery Pipe

(Rev. 2004) *All information subject to change without notice.*
6SE483 0401 Copyright © 2004 DETROIT DIESEL CORPORATION

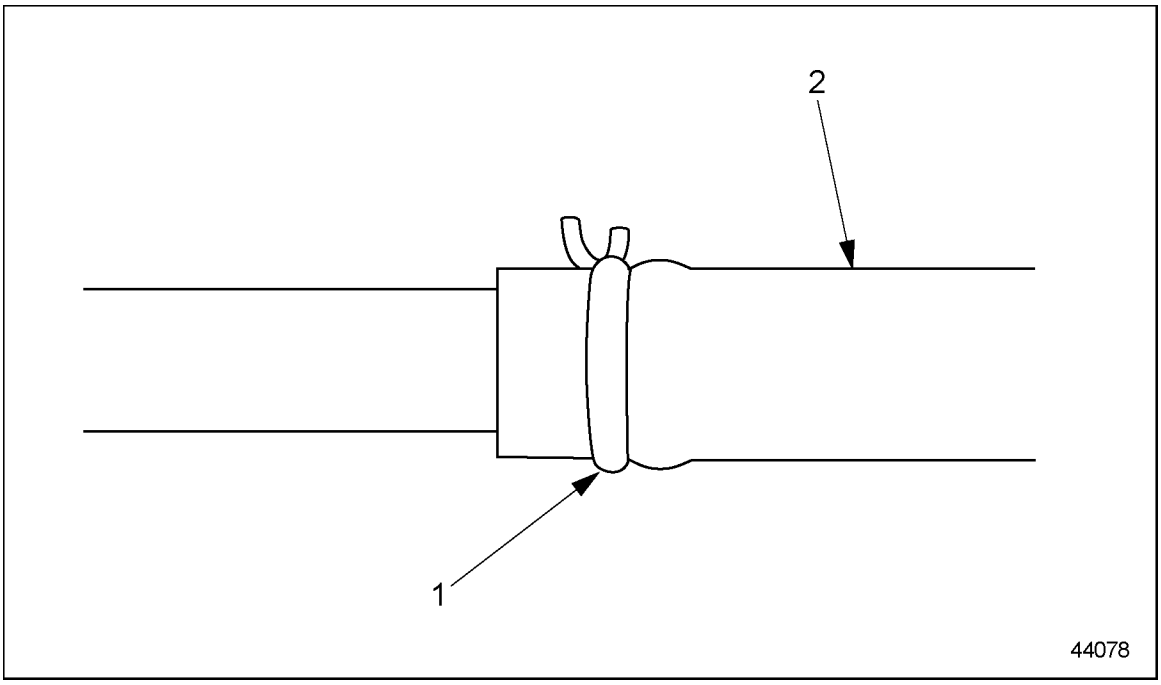

1. Hose Clamp
2. Hose

Figure 6-44 Delivery Pipe and Related Parts

NOTICE:
Before hose is installed on delivery pipe ensure there are not any sharp edges present that can cut the hose liner (BLACK I.D.).

1. Install mixer-section of delivery pipe to intake manifold with band clamp. Refer to section 6.6.17 for torque specifications.

 Copyright © 2004 DETROIT DIESEL CORPORATION

2. Install hose on delivery pipe mixer-section, secure hose with clamp. Ensure top of delivery pipe is horizontal. See Figure 6-45.

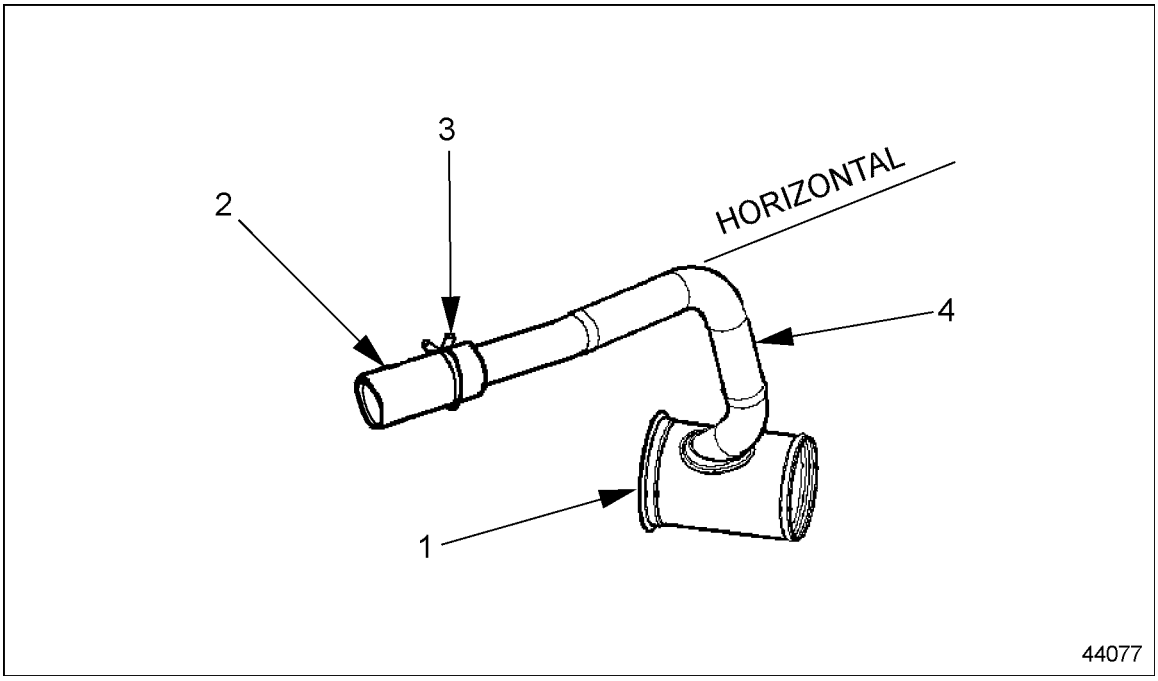

1. Mixer
2. Hose
3. Hose Clamp
4. Mixer-Section

Figure 6-45 Mixer-Section and Related Parts

(Rev. 2004) *All information subject to change without notice.*
6SE483 0401 Copyright © 2004 DETROIT DIESEL CORPORATION

3. Install venturi-section on EGR cooler with clamp and connect Delta-P tubes refer to section 6.6.17 and refer to section 6.6.19. See Figure 6-46.

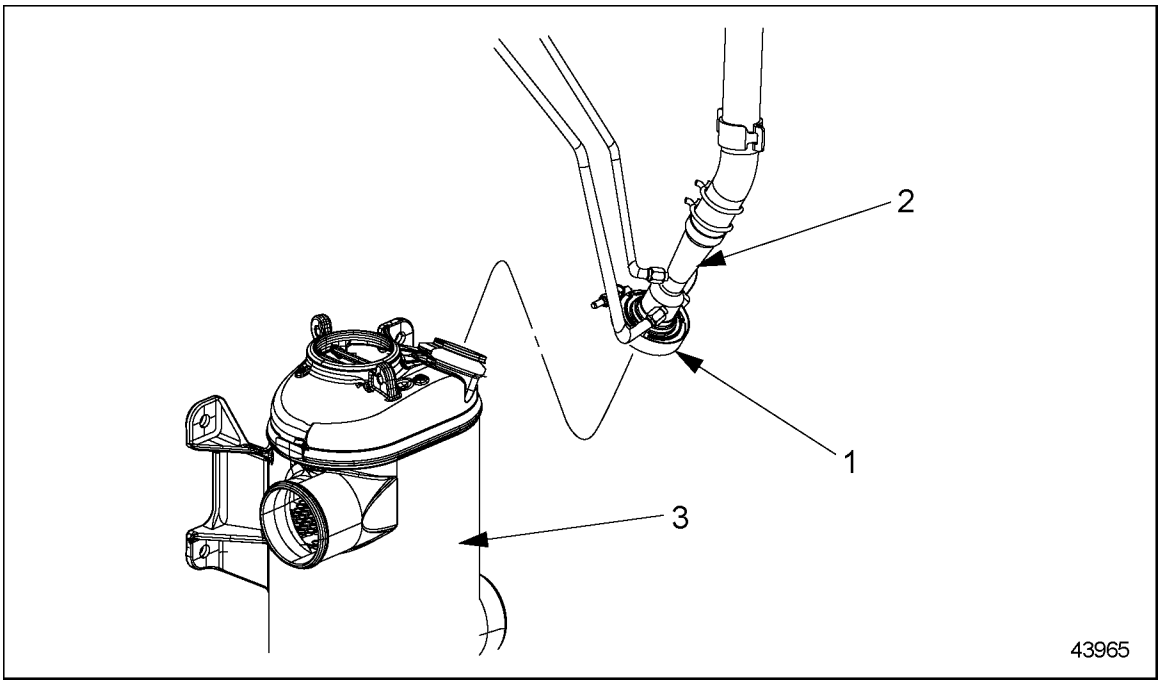

1. Clamp
2. Venturi-Section
3. EGR Cooler

Figure 6-46 EGR Cooler and Delivery Pipe

 Copyright © 2004 DETROIT DIESEL CORPORATION

4. Install hose on venturi- section and secure hose with clamp. See Figure 6-47.

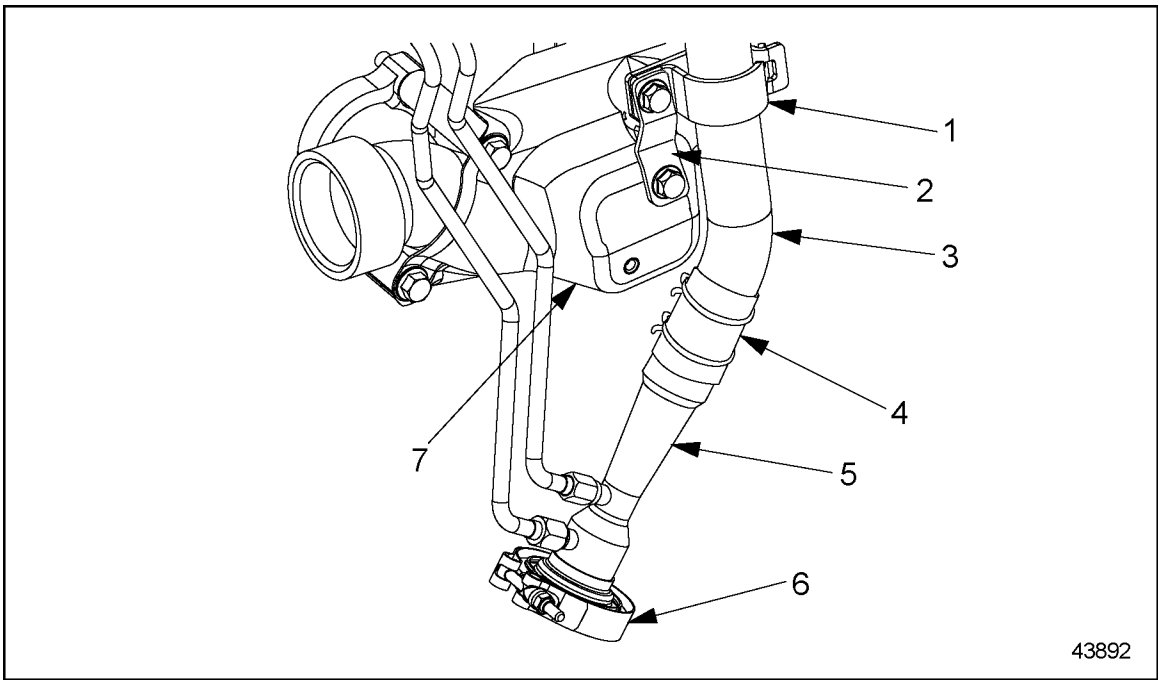

1. P-Clip
2. S-Bracket
3. Mid-Section
4. Hose
5. Venturi-Section
6. Clamp
7. Exhaust Manifold Heat Shield

Figure 6-47 Venturi-Section and Related parts

(Rev. 2004) *All information subject to change without notice.*
6SE483 0401 Copyright © 2004 DETROIT DIESEL CORPORATION

5. Align delivery pipe mid-section with the venturi-section and mixer-section, push the ends of the delivery pipe mid-section onto the hose connections and secure with clamps. See Figure 6-48.

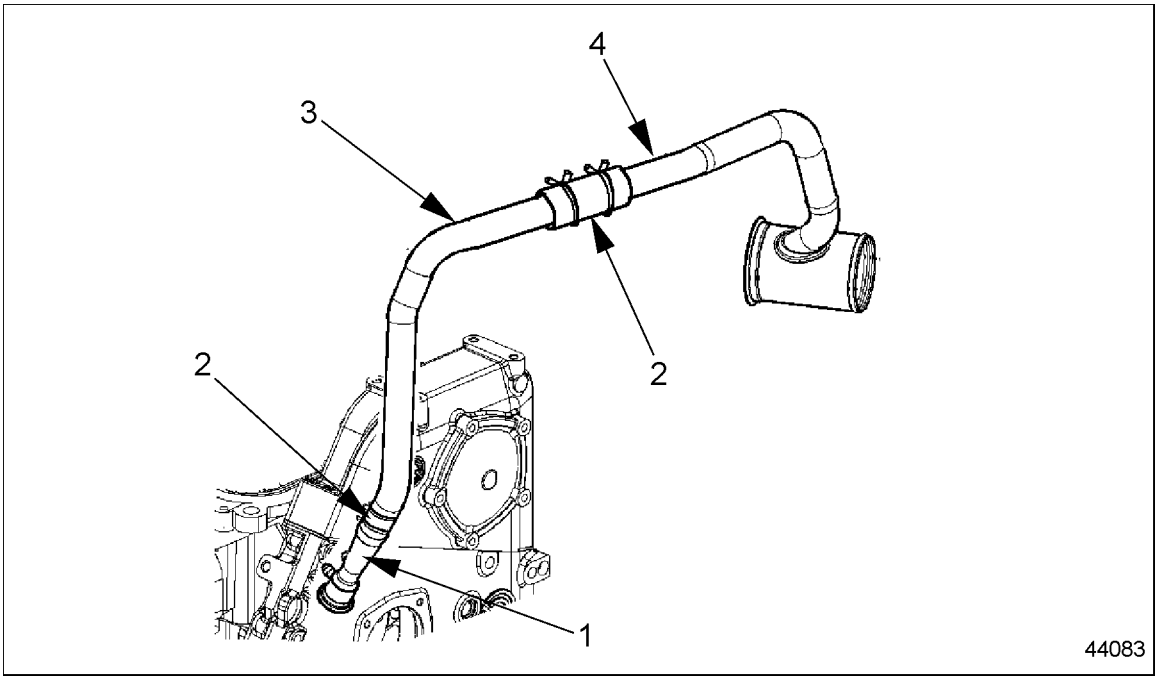

1. Venturi-Section
2. Hose
3. Mid-Section
4. Mixer-Section

Figure 6-48 Delivery Pipe and Related Parts

6. Ensure installed hose connections are properly aligned.
7. Install any brackets or hardware that were removed for the hose replacement procedure. Refer to section 6.6.17 and refer to section 6.6.19.

6.6.17 EGR Delivery Pipe Installation

The EGR Delivery Pipe provides a flow path from the cooler to the Intake Manifold.

For Series 60 Engines equipped with EGR systems install the delivery pipe as follows:

1. Loosely install the mixer end of the pipe (large diameter tube) to the intake manifold with band clamp. See Figure 6-42.
2. Loosely install the flow meter end of the pipe (small end) to the cooler outlet flange with band clamp. See Figure 6-30.
3. Loosely install two gusseted L-brackets to the top of the camshaft gear cover.
4. Loosely attach the delivery pipe to the gusseted L-brackets with two P-clips. See Figure 6-40.

 Copyright © 2004 DETROIT DIESEL CORPORATION

5. Loosely attach the delivery pipe to the forward exhaust manifold heat shield with a P-clip and S-bracket. See Figure 6-41.

NOTICE:
Make sure that the P-clip is mounted behind the S-bracket.

Notice:
On some models the delivery tube is clipped to a bracket on the alternator. Ensure correct alignment before torquing.

6. Tighten the the delivery tube to intake mixer clamp to 12 N·m (106 lb·in.).
7. Tighten the clamp at the delivery tube to cooler to 12 N·m (106 lb·in).
8. Tighten the L-Bracket bolts in the camshaft gear cover to 58-73 N·m (43-54 lb·ft).

Notice:
The camshaft gear cover is aluminum. Over tightening the bolt can strip threads in the camshaft gear cover.

9. Tighten the bolt and nut connecting the two P-clips to the gusseted L-brackets to 30-38 N·m (22-28 lb·ft).
10. Tighten the bolt into the heat shield to 30-38 N·m (22-28 lb·ft).

6.6.18 EGR Rate Measurement System Removal

For Series 60 engines equipped with EGR systems remove Delta-P Sensor Rate Measurement System as follows:

⚠ CAUTION:
To avoid injury from hot surfaces, allow engine to cool before removing any component. Wear protective gloves.

1. Remove four hose clamps at Delta-P sensor. See Figure 6-49.
2. Remove bolt and P-clips securing Delta-P tubes.
3. Remove Delta-P tubes from ports on Delta-P Sensor and Delivery tube.
4. Remove two bolts securing Delta-P Sensor to bracket.
5. Remove three nuts and six isolators securing Delta-P sensor mount to thermostat housing. See Figure 6-49.

(Rev. 2004) *All information subject to change without notice.*
6SE483 0401 Copyright © 2004 DETROIT DIESEL CORPORATION

6.6.19 EGR Rate Measurement System Installation

EGR Rate Measurement system provides DDEC with measurements resulting in EGR flow rate prediction. The Rate Measurement system consists of a Venturi with pressure differential sensor and exhaust gas temperature sensor. Pressure differential between Venturi inlet and throat, along with exhaust gas temperature are converted to mass flow rate in DDEC. The Venturi is a component of the delivery pipe.

Install the EGR Rate Measurement System as follows:

1. Install the Delta-P sensor mount over the thermostat housing. Rubber isolators should be installed on both sides of the mount in each of the three mounting holes. Tighten nuts over the mounting studs until the nuts come to a hard stop. Torque the nuts to 23-27 N·m (17-20 lb·ft).
2. Install the Delta-P sensor to the bracket with two bolts torque to 30-38 N·m (22-28 lb·ft).
3. Install a hose connector with a clamp on each end to both ports on the sensor bracket.
4. Loosely install two Delta-P tubes to the delivery pipe. The tube ends should line up with the hose connections on the Delta-P sensor bracket.
5. Loosely clip the Delta-P tubes to the exhaust manifold assembly using clips.
6. Tighten the Delta-P tube nuts to 24-30 N·m (18-22 lb·ft).
7. Tighten the clip bolt to 30-38 N·m (22-28 lb·ft).
8. Tighten the four hose clamps until snug.

 Copyright © 2004 DETROIT DIESEL CORPORATION

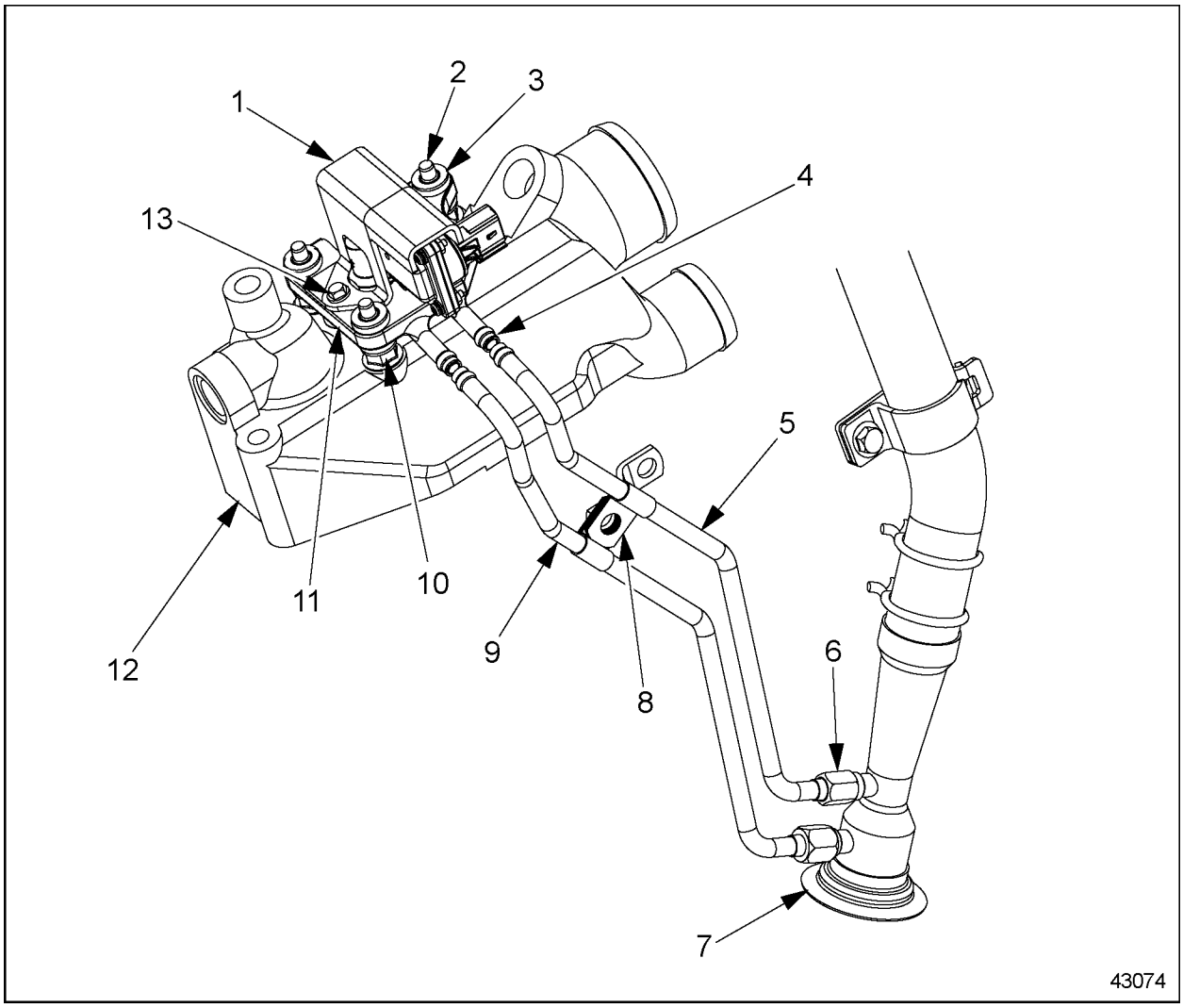

1. Delta-P Sensor
2. Stud
3. Isolator
4. Hose Clamp
5. Delta-P Tube
6. Nut
7. Delivery Pipe
8. Clip
9. Delta-P Tube
10. Nut
11. Bracket
12. Thermostat Housing
13. Bolt

Figure 6-49 Delta-P Sensor and Related Parts

6.6.20 Variable Pressure Output Device (VPOD) Removal

The Variable Pressure Output Device (VPOD) modulates air pressure to the VNT.

Remove the VPOD as follows:

(Rev. 2004) *All information subject to change without notice.*
6SE483 0401 Copyright © 2004 DETROIT DIESEL CORPORATION

CAUTION:

To avoid injury from hot surfaces, allow engine to cool before removing any component. Wear protective gloves.

1. Remove airline from VPOD.
2. Unplug harness connection.
3. Remove two bolts and one stud holding VPOD assembly and bracket to engine block.

6.6.21 Variable Pressure Output Device (VPOD) Installation

Install Variable Pressure Output Device (VPOD) as follows:

1. Align VPOD assembly and bracket to threaded holes in engine block, install two bolts and one stud. Torque the M10 bolt and M10 stud to 58-73 N·m (43-54 lb·ft). Torque the M8 bolt to 30-38 N·m (22-28 lb·ft).

 Copyright © 2004 DETROIT DIESEL CORPORATION

2. Connect airline to VPOD and tighten. See Figure 6-50.

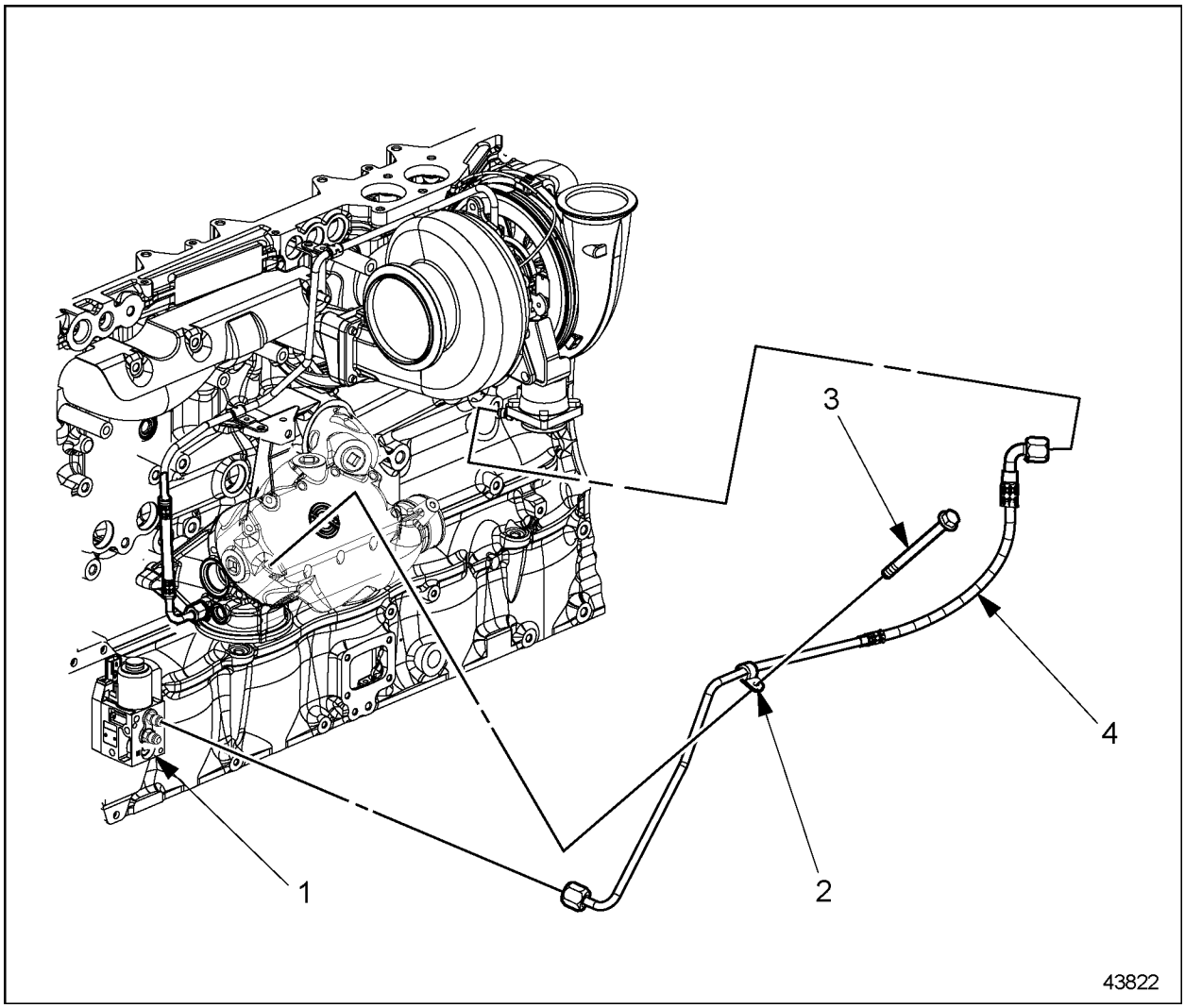

1. VPOD Assembly
2. Clip
3. Bolt
4. Air Line Connection

Figure 6-50 VPOD and Related Parts

(Rev. 2004) *All information subject to change without notice.*
6SE483 0401 Copyright © 2004 DETROIT DIESEL CORPORATION

3. Plug harness connection into VPOD assembly. See Figure 6-51.

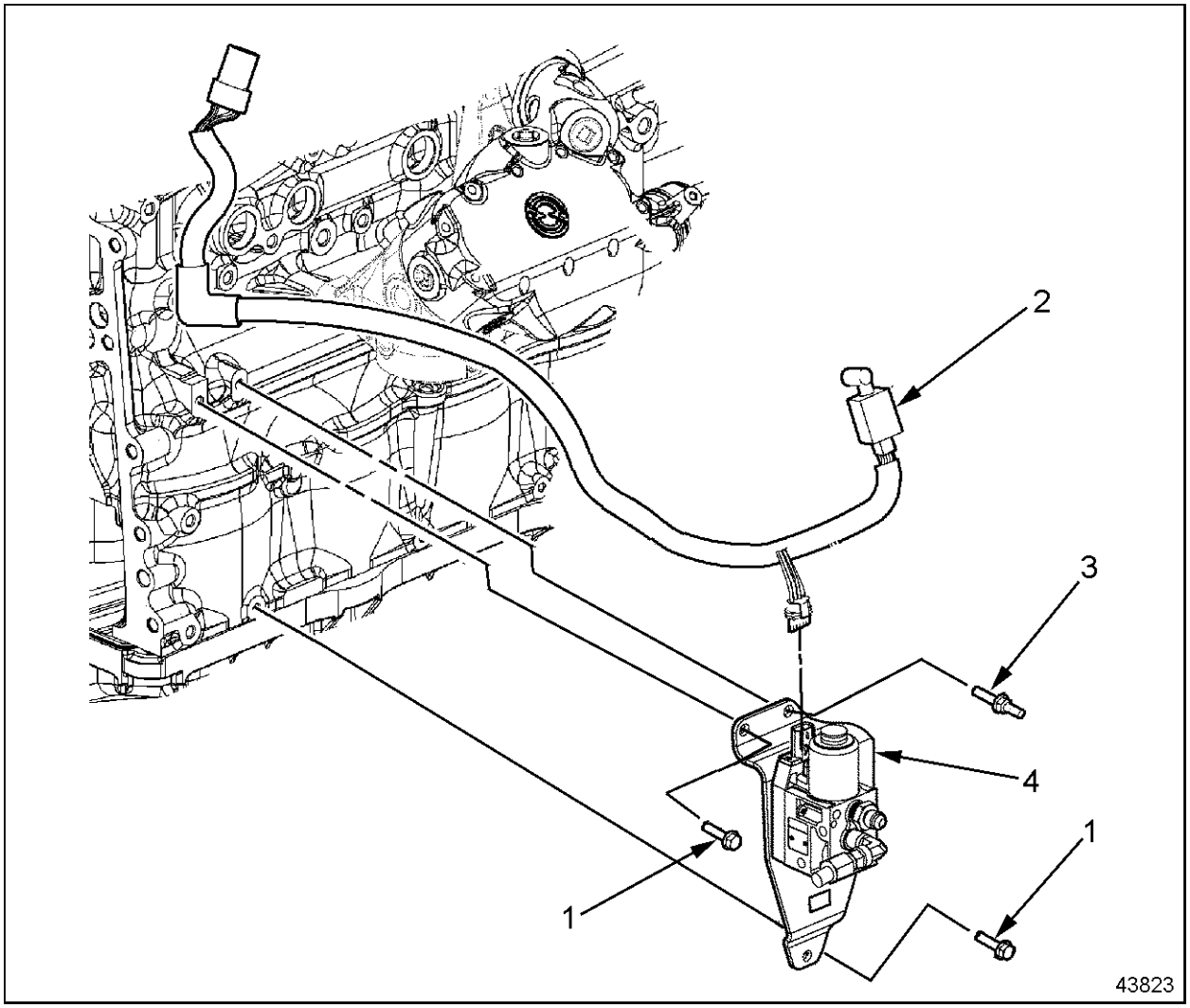

1. Bolt
2. Sensor Harness
3. Stud
4. VPOD Assembly

Figure 6-51 VPOD and Related Parts

NOTE:
The VPOD assembly is not serviced remove and replace only.

 Copyright © 2004 DETROIT DIESEL CORPORATION

6.6.22 Removal of the Speed Sensor

For Series 60 engines equipped with EGR systems remove the turbocharger speed sensor from the turbocharger as follows:

NOTE:
Servicing of the speed sensor is limited to its replacement.

NOTE:
If the turbocharger speed sensor is difficult to access, removal of the turbocharger may be required. Refer to section 6.6.2.

1. Clean the center housing area arount the base of the speed sensor. See Figure 6-52.

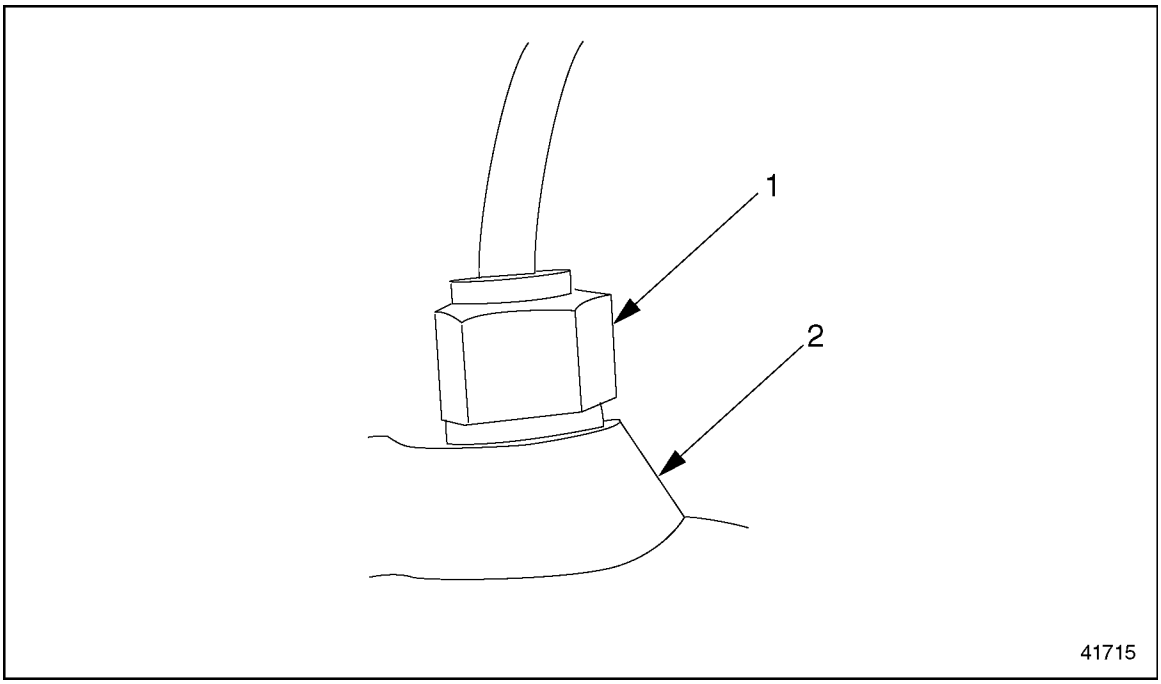

1. Turbocharger Speed Sensor
2. Center Housing

Figure 6-52 Location of Speed Sensor

2. Disconnect the wire from the sensor from the main harness.

(Rev. 2004) *All information subject to change without notice.*
6SE483 0401 Copyright © 2004 DETROIT DIESEL CORPORATION

3. Place turbocharger speed sensor socket J 45643 on speed sensor while threading the lead wire through the slot in the side of the socket.

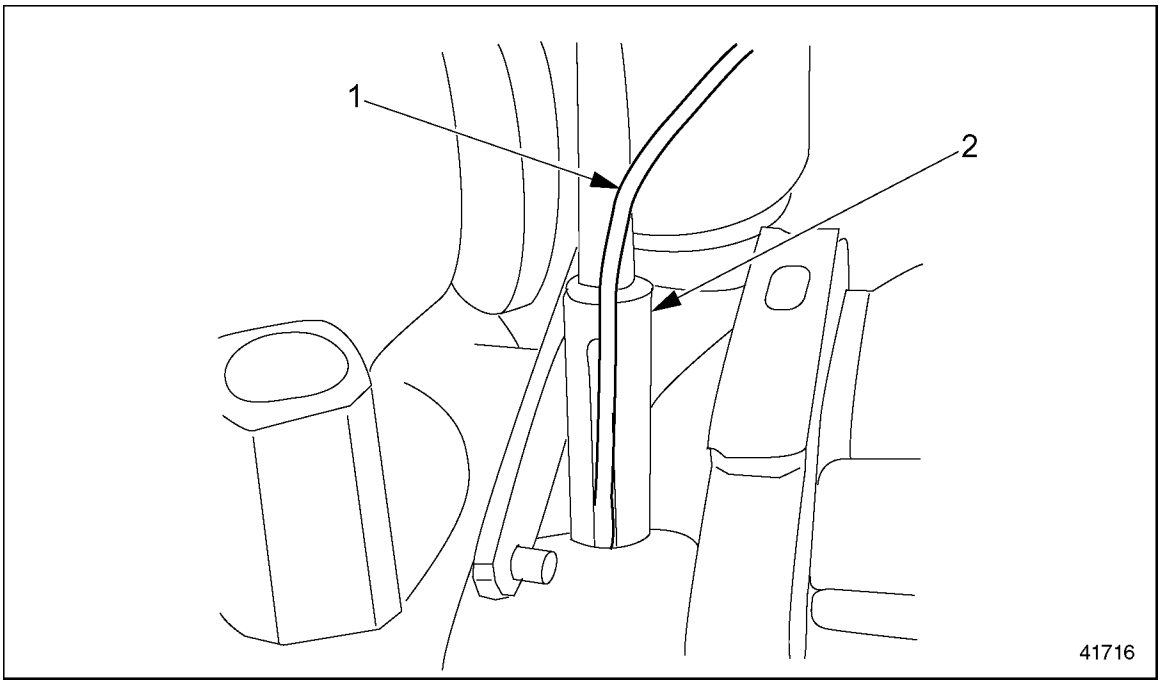

1. Sensor Lead Wire
2. Turbocharger Speed Sensor Socket

Figure 6-53 Removal of Turbocharger Speed Sensor

 Copyright © 2004 DETROIT DIESEL CORPORATION

NOTICE:

Ensure the turbocharger shaft is secured and not rotated when the turbocharger speed sensor is removed from the bearing spacer. Turning the shaft without the sensor in place can rotate the bearing spacer. If the sensor is not properly positioned in the opening of the bearing spacer, see Figure 6-54, the sensor and turbocharger bearings will be damaged during sensor installation.

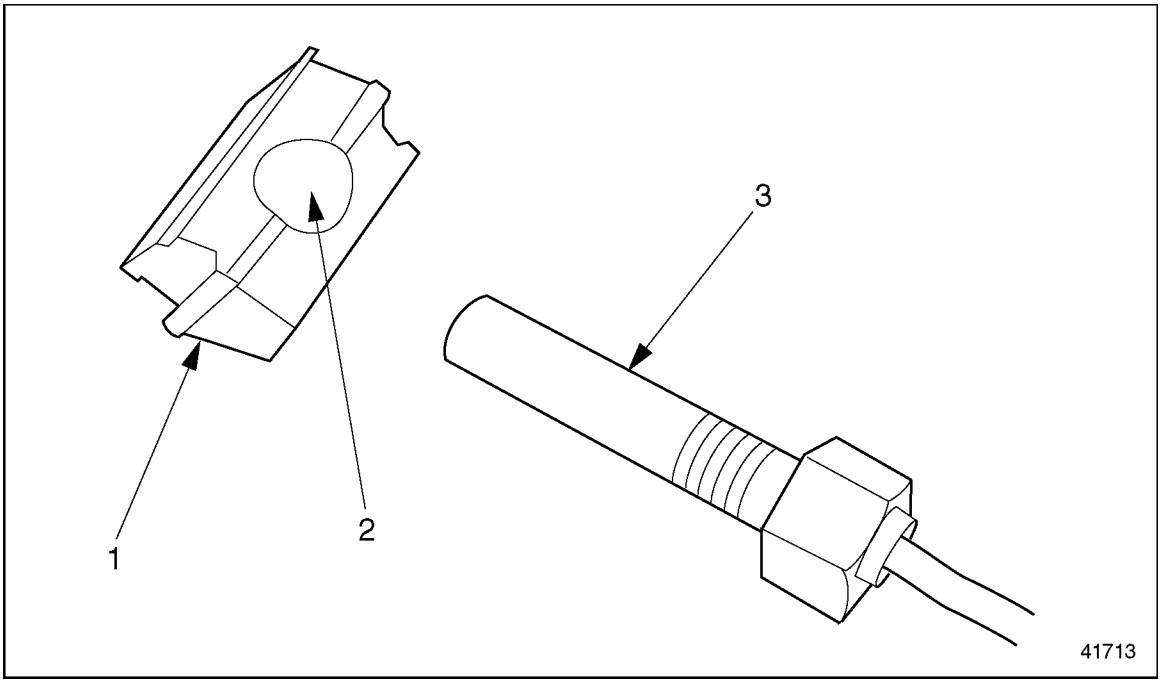

1. Bearing Spacer
2. Spacer Hole
3. Turbocharger Speed Sensor

Figure 6-54 Turbocharger Speed Sensor Position

4. Loosen and remove the sensor while avoiding exessive pulling, bending or twisting of the sensor lead wire.

6.6.23 Installation of the Speed Sensor

Install the turbocharger speed sensor in the center housing as follows:

1. Place the turbocharger speed sensor socket J 45643 over the head of the turbocharger speed sensor with the lead wire through the slot on the side of the socket.
2. Inspect the threaded hole for the speed sensor and ensure the hole in the bearing spacer is aligned and the rotor shaft is visible.

(Rev. 2004) *All information subject to change without notice.*
6SE483 0401 Copyright © 2004 DETROIT DIESEL CORPORATION

3. Manually insert the turbocharger speed sensor into the threaded hole of the center housing wall. Turn the sensor until the sealing lip on the underside of the sensor seats against the flat on the center housing and the sensor is finger tight.
4. Turn the turbocharger rotor to ensure it spins freely with minimal resistance. If binding occurs, repeat speed sensor installation.

NOTICE:
Ensure the turbocharger rotor turns freely. If the shaft binds, the speed sensor is not aligned with the bearing spacer and damage can occur to the shaft and speed sensor.

5. Tighten the speed sensor to 10-11 N·m (90-100 lb·in.) torque.
6. Turn the turbocharger rotor to ensure it spins freely. If binding occurs it is not aligned properly. Refer to step 3.

 Copyright © 2004 DETROIT DIESEL CORPORATION

6.7 TURBOCHARGER SERIES 60 GAS ENGINES (GENSET)

The turbocharger is designed to increase the overall power and efficiency of the engine. Power to drive the turbocharger is extracted from the energy in the engine exhaust gas.

A turbocharger can be broken down into 3 basic pieces; a compressor cover, a center housing rotating assembly (CHRA), and a turbine housing.

The compressor cover is an aluminum alloy casting that encloses the compressor wheel and provides a V-band connection for the compressor outlet, and a hose connection for the compressor inlet. The compressor cover is secured to the compressor side of the CHRA.

The CHRA contains a turbine wheel and shaft assembly, piston ring(s), thrust spacer, compressor wheel, and wheel retaining nut. This rotating assembly is supported on two pressure-lubricated bearings that are retained in the center housing by snap rings. Internal oil passages are drilled in the center housing to provide lubrication to the turbine wheel shaft bearings, thrust washer, thrust collar, and thrust spacer.

The turbine housing is a heat-resistant steel alloy casting that encloses the turbine wheel and provides a flanged engine exhaust gas inlet and an axially located turbocharger exhaust gas outlet. The turbine housing is secured to the turbine end of the center housing.

(Rev. 2004) *All information subject to change without notice.*
6SE483 0401 Copyright © 2004 DETROIT DIESEL CORPORATION

All Series 60G, 60 Hz Genset engines use a model K33 turbocharger, manufactured by 3K turbosystems. See Figure 6-55.

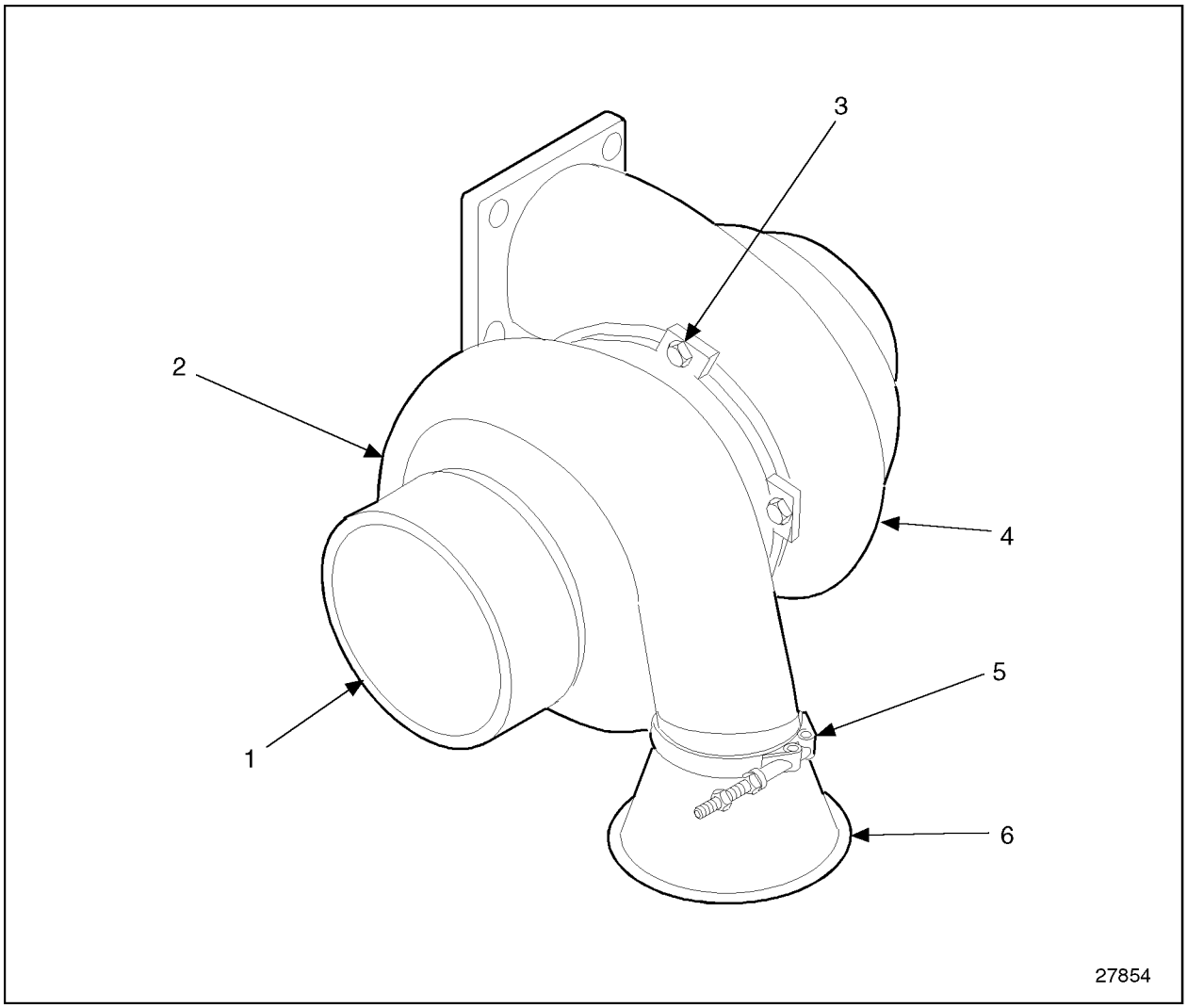

1. Compressor Inlet
2. Compressor Housing
3. Turbine Housing Bolt
4. Turbine Housing
5. V-Band Clamp
6. Compressor Outlet Adapter

Figure 6-55 K33 Turbocharger Assembly (1996 Model)

 Copyright © 2004 DETROIT DIESEL CORPORATION

This turbocharger is similar in appearance to the diesel turbochargers.

For the 1996 model year, the compressor cover has an adaptor cone on the compressor outlets, attached with a V-clamp. This compressor cover is attached to the CHRA with a bolted joint. For the 1997 model, a new compressor cover with the correct compressor outlet dimensions will be introduced, eliminating the adapter cone. The new cover will be secured to the CHRA with a V-band clamp. These compressor covers will not be interchangeable. See Figure 6-56.

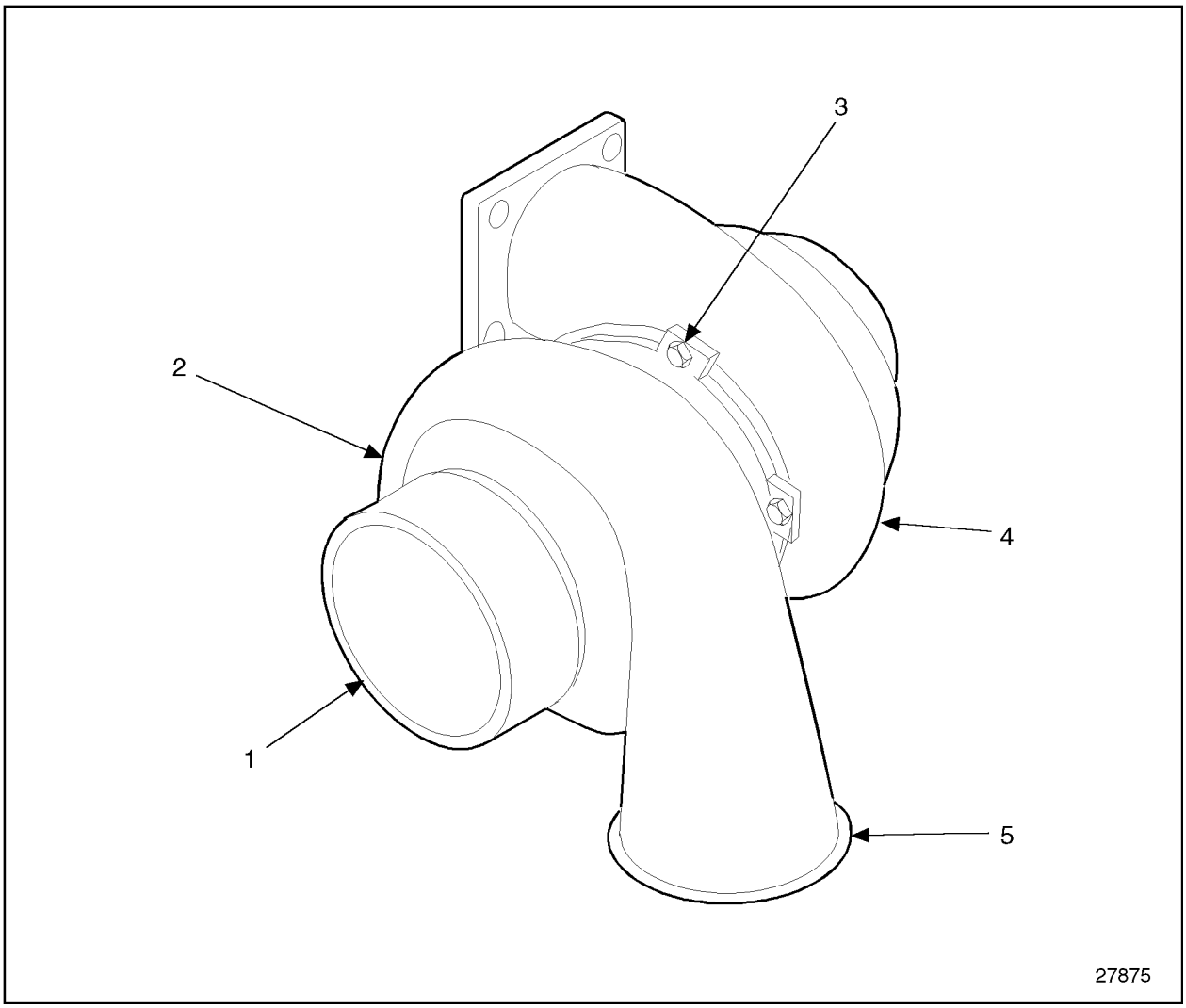

1. Compressor Inlet
2. Compressor Housing
3. Turbine Housing Bolt
4. Turbine Housing
5. Compressor Outlet

Figure 6-56 K33 Turbocharger Assembly (1997 and later Model)

(Rev. 2004) *All information subject to change without notice.*
6SE483 0401 Copyright © 2004 DETROIT DIESEL CORPORATION

The turbocharger is mounted on the exhaust outlet flange of the engine exhaust manifold. After the engine is started, the exhaust gases flow from the engine and through the turbine housing causing the turbine wheel and shaft to rotate. See Figure 6-57.

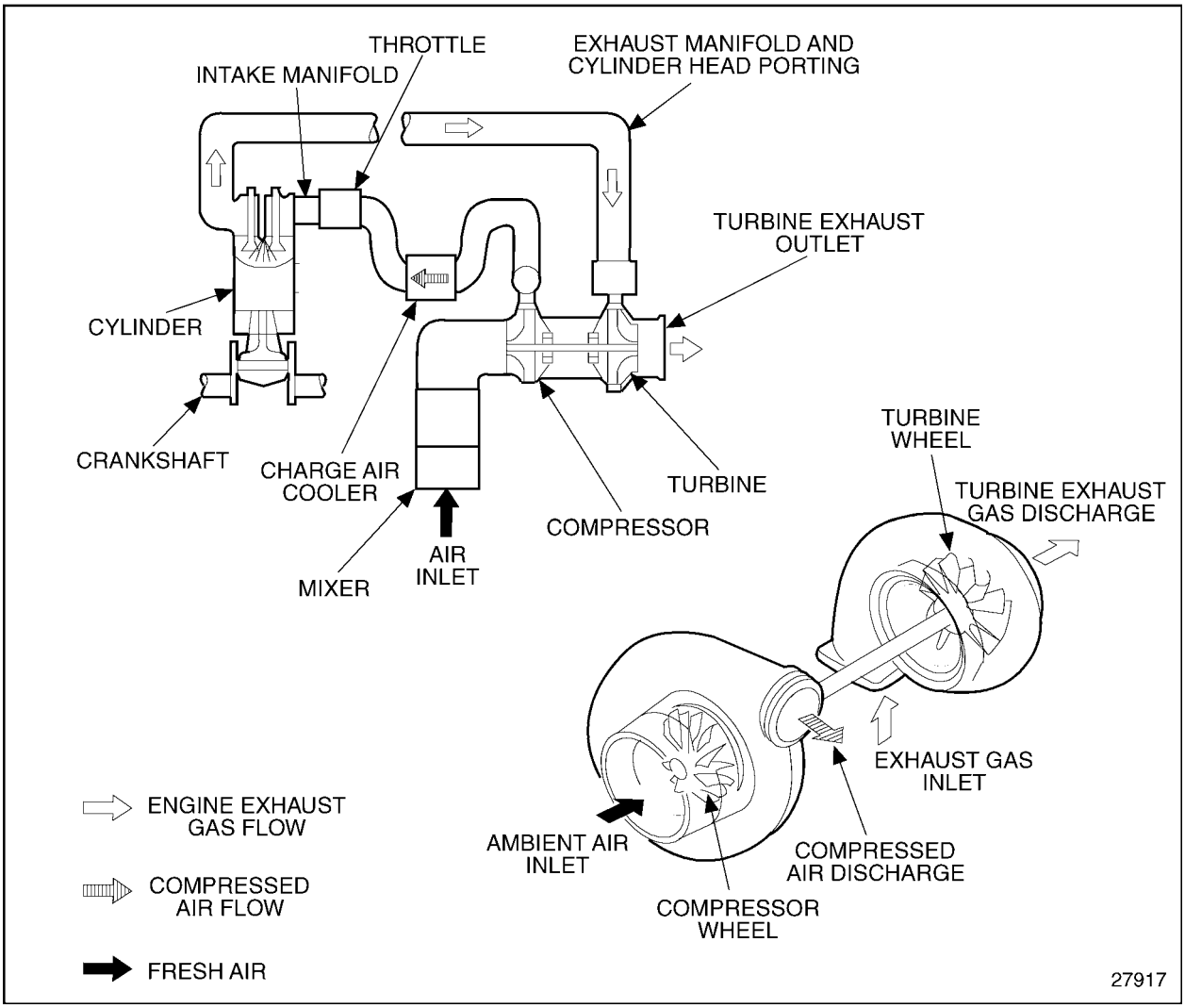

Figure 6-57 Schematic Air Flow Diagram (Series 60G Engine, low pressure fuel system)

The gases are discharged into the exhaust system after passing through the turbine housing.

The compressor wheel, in the compressor housing, is mounted on the opposite end of the turbine wheel shaft and rotates with the turbine wheel. The compressor wheel draws in clean gas and air, compresses it, and delivers high pressure air and gas through the throttle and intake manifold to the engine cylinders.

 Copyright © 2004 DETROIT DIESEL CORPORATION

Oil for lubricating the turbocharger is supplied under pressure through an external oil line extending from the oil filter adaptor to the top of the center housing. See Figure 6-58.

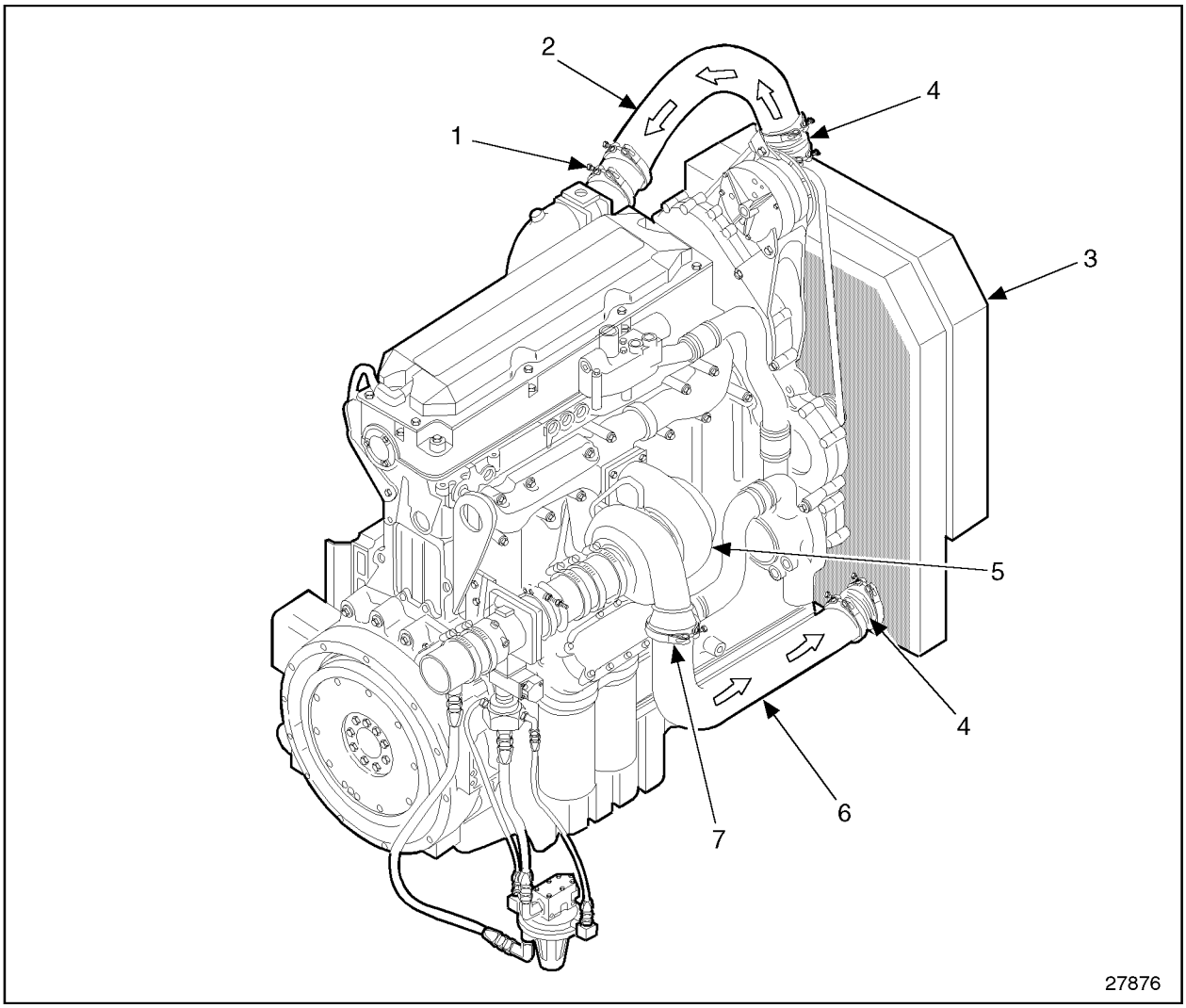

1. Coupling Hose Clamp
2. Charge Air Cooler Outlet Duct
3. Charge Air Cooler
4. Flexible Coupling
5. Turbocharger
6. Charge Air Cooler Inlet Duct
7. V-Band Clamp

Figure 6-58 Turbocharger Oil Lines Series 60 Gas Engine (Low Pressure System)

(Rev. 2004) *All information subject to change without notice.*
6SE483 0401 Copyright © 2004 DETROIT DIESEL CORPORATION

From the oil inlet in the center housing, the oil flows through the drilled oil passages in the housing to the shaft bearings, thrust ring, thrust bearing, and backplate or thrust plate. See Figure 6-59.

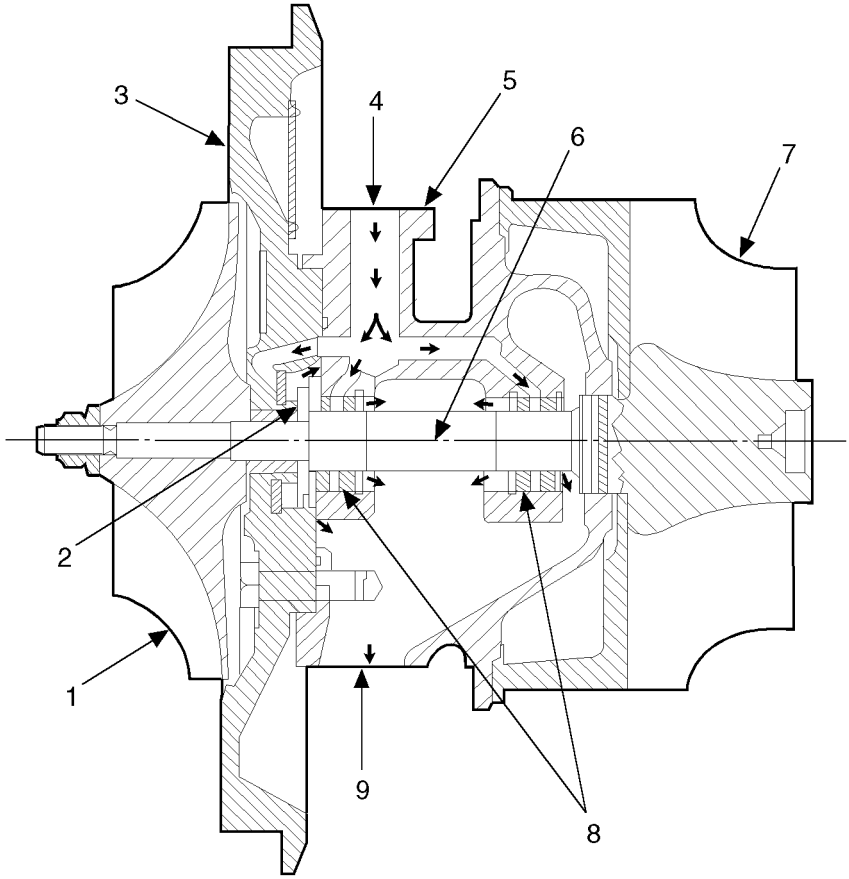

1. Compressor Wheel
2. Thrust Bearing
3. Backplate
4. Oil Inlet
5. Center Housing
6. Shaft
7. Turbine Wheel
8. Shaft Bearings
9. Oil Outlet

Figure 6-59 Turbocharger Oil Flow Diagram (Series 60G Engine)

 Copyright © 2004 DETROIT DIESEL CORPORATION

The oil returns by gravity to the engine oil pan through an external oil line extending from the bottom of the turbocharger center housing to the cylinder block.

Listed in Table 6-2are the diagnostic codes.

Parameter Identification Character (PID): A PID is a single byte character used in J 1587 messages to identify the data byte(s) that follow. PIDs in the range 0-127 identify single byte data, 128-191 identify double byte data, and 192-253 identify data of varying length.

Failure Mode Identifier (FMI): The FMI describes the type of failure detected in the subsystem and identified by the PID. The FMI and the PID combine to form a given diagnostic code defined inJ 1587within PID 194.

DDR Description	Voltage	PID	FMI	Information
AIR INLET PRESSURE	HIGH	106	0	Indicates that the MAP has detected that engine intake manifold pressure has exceeded the recommended operating range.
AIR INLET PRESSURE	HIGH	106	3	Indicates that the MAP input to the ECM has exceeded 95% (normally >4.75 volts) of the sensor supply voltage. This diagnostic condition is typically detected when there is an open sensor return circuit or the sensor signal circuit is shorted to the sensor +5 volt supply.
AIR INLET PRESSURE	LOW	106	4	Indicated that the MAP input to the ECM has dropped below 5% (normally, 0.25 volts) of the sensor supply voltage. This diagnostic condition is typically detected when there is:- An open sensor signal circuit- An open sensor signal circuit opens sensor +5 volt supply circuit- The sensor signal is shorted to the sensor return circuit or ground- The sensors +5 volt supply is shorted to sensor return circuit or to ground.

Table 6-2 Air Inlet Pressure Diagnostic Codes for the Series 60G Engine

(Rev. 2004) *All information subject to change without notice.*
6SE483 0401 Copyright © 2004 DETROIT DIESEL CORPORATION

6.7.1 Repair or Replacement of Turbocharger (Series 60 Gas Engine)

To determine if repair is possible or replacement of the turbocharger is necessary perform the following procedure. See Figure 6-60.

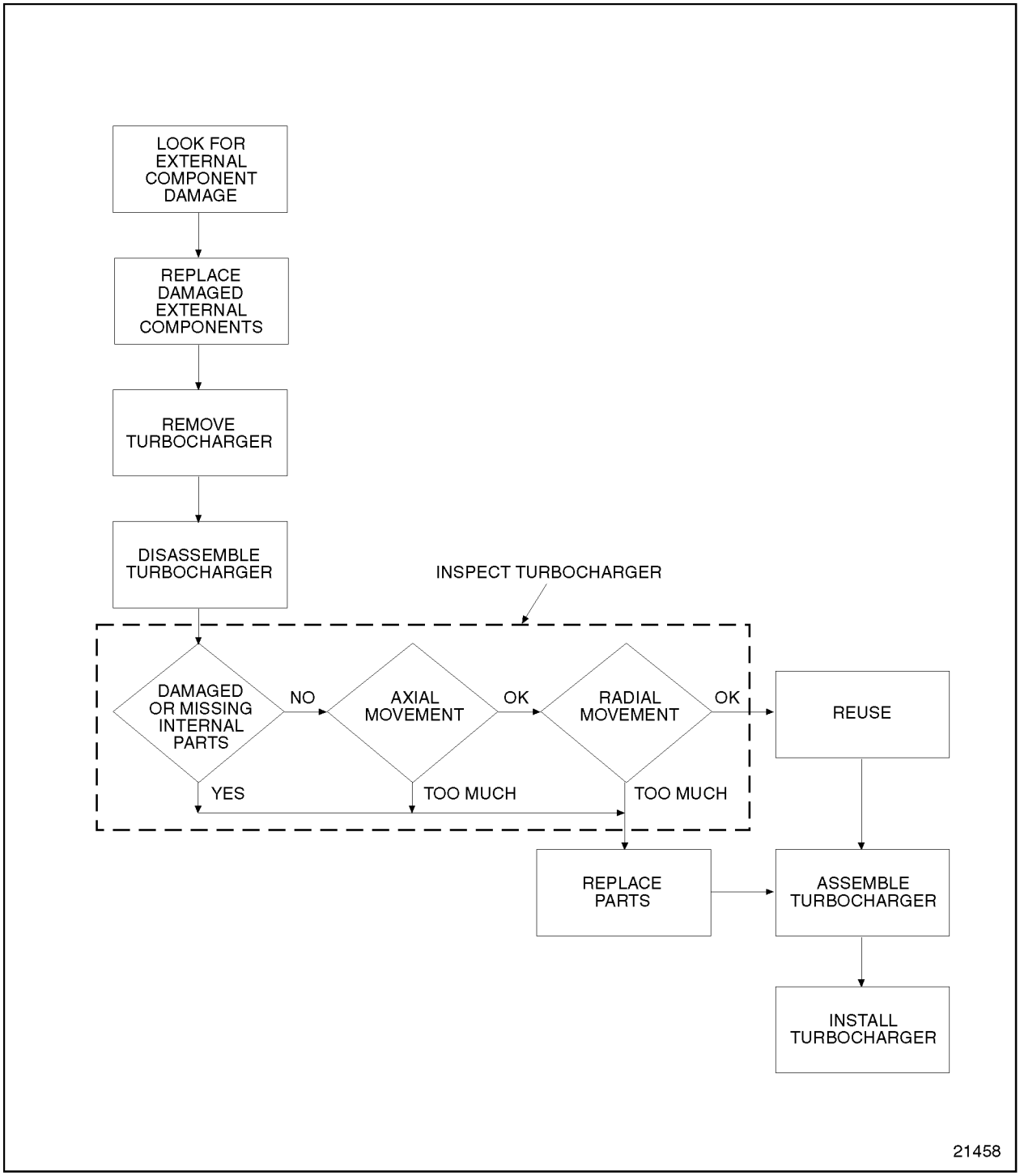

Figure 6-60 Flowchart for Repair or Replacement of Turbocharger (Series 60 Gas Engine)

 Copyright © 2004 DETROIT DIESEL CORPORATION

6.7.2 Cleaning and Removal of Turbocharger (Series 60G Engine)

Cleaning the turbocharger is not necessary before removal.

CAUTION:

To avoid injury from hot surfaces, allow engine to cool before removing any component. Wear protective gloves.

Prior to removal, visually check for:

1. Missing or loose nuts and bolts.
2. Loose or damaged intake and exhaust ducting.
3. Damaged oil supply and drain lines.
4. Cracked or deteriorating turbocharger housings.
5. External oil leakage.
6. Replace damaged parts with new parts.

To remove the turbocharger, perform the following:

NOTICE:

Do not attempt to remove carbon or dirt buildup on the compressor or turbine wheels without removing the turbocharger from the engine. If chunks of carbon are left on the blades, an unbalanced condition will exist and subsequent failure of the bearings will result if the turbocharger is operated. However, it is not necessary to disassemble the turbocharger to remove dirt or dust buildup.

1. Disconnect and remove the elbow at the compressor housing outlet, by removing the V-band clamp.
2. Disconnect and remove the inlet hose attached to the compressor housing inlet. To do this, disconnect the gas mixer housing two-piece bracket by removing the two bolts connecting the brackets together. Remove the mixer, bracket, and inlet piping as an assembly; set aside until re-installation.
3. Disconnect the exhaust outlet pipe from the turbine housing of the turbocharger. For proper operation, the turbocharger rotating assembly must turn freely. Whenever the exhaust ducting is removed, spin the turbine wheel by hand.

(Rev. 2004) *All information subject to change without notice.*
6SE483 0401 Copyright © 2004 DETROIT DIESEL CORPORATION

4. Remove the inlet oil line from the top of the center housing.
5. Remove the oil drain line from the bottom of the center housing.
6. Attach a chain hoist and a suitable lifting sling to the turbocharger assembly.
7. Remove the nuts securing the turbocharger assembly to the exhaust manifold. Then, lift the turbocharger assembly away from the engine and place it on a bench.
8. Cover the end of the oil drain line, the oil outlet line, water supply, water return, the air inlet and the exhaust outlet openings on the engine and turbocharger to prevent the entry of foreign material.

CAUTION:

To avoid injury from improper use of chemicals, follow the chemical manufacturer's usage, handling, and disposal instructions. Observe all manufacturer's cautions.

9. Clean the exterior of the turbocharger with a non-caustic cleaning solvent before disassembly.

 Copyright © 2004 DETROIT DIESEL CORPORATION

6.7.3 Disassembly of Turbochargers (Series 60G Engine)

Disassemble the turbocharger as follows:

1. Mark the related positions of the compressor housing, center housing and turbine house with a punch or scribe to assure reassembly in the same relative position.

NOTICE:
Exercise care when removing the compressor housing and turbine housing to prevent damage to the compressor and turbine wheels.

2. Loosen and remove the bolts and retaining clamps securing the compressor housing to the backplate assembly and remove the compressor housing.
3. Loosen and remove the bolts securing the turbine housing to the center housing. See Figure 6-61.

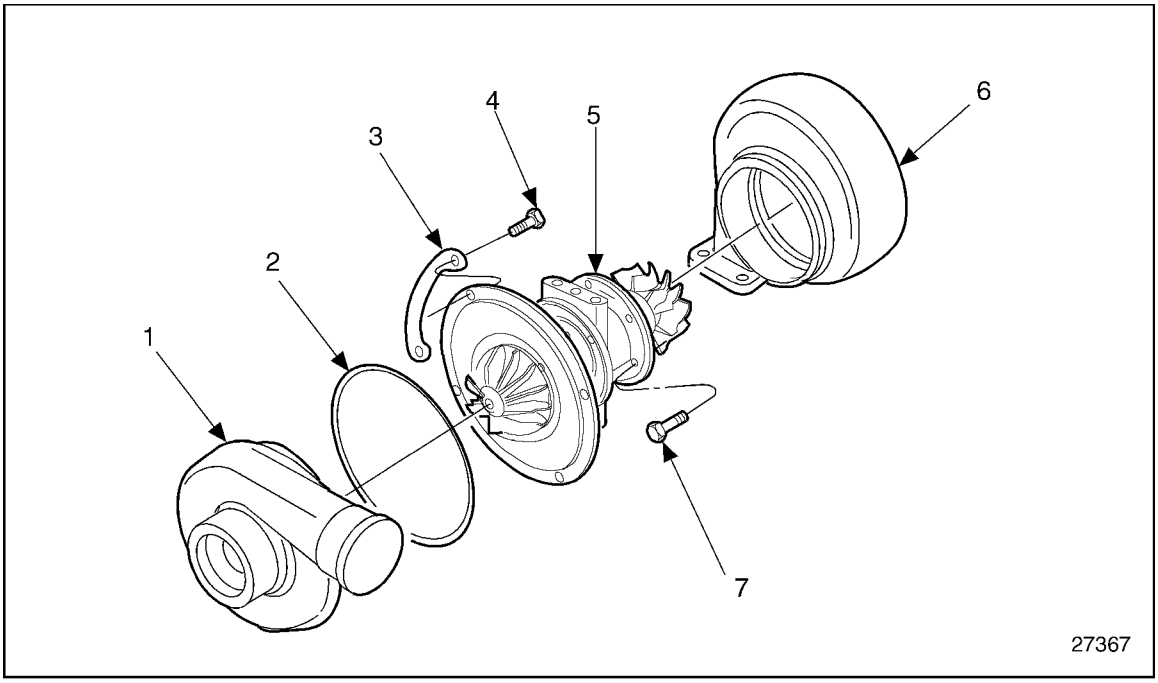

1. Compressor Housing
2. O-ring
3. Retaining clamp (compressor housing)
4. Bolt (compressor housing)
5. Center Housing Rotating Assembly (CHRA)
6. Turbine housing
7. Bolt (turbine housing)

Figure 6-61 Series K33 Turbocharger (Series 60G Genset, 1996 Model)

4. Remove the turbine housing from the center housing.

(Rev. 2004) *All information subject to change without notice.*
6SE483 0401 Copyright © 2004 DETROIT DIESEL CORPORATION

6.7.3.1 Inspection and Cleaning of Turbocharger (Series 60G)

Inspect the disassembled turbocharger, discarding any damaged parts, in the following manner:

1. Visually check for nicked, crossed or stripped threads.
2. Visually check the turbine wheel shroud and turbine wheel for signs of rubbing.
3. Visually check the compressor wheel for signs of rubbing or damage from foreign material. The wheel must be free of dirt and other foreign material.
4. Check the bearing axial end play:

   [a] Clamp the center housing assembly in a bench vise equipped with soft jaws. See Figure 6-62.

   [b] Fasten the dial indicator and magnetic clamp, part of magnetic base dial indicator set, J 7872-2, to the center housing so that the indicator tip rests on the end of the rotating shaft on the compressor side. See Figure 6-62.

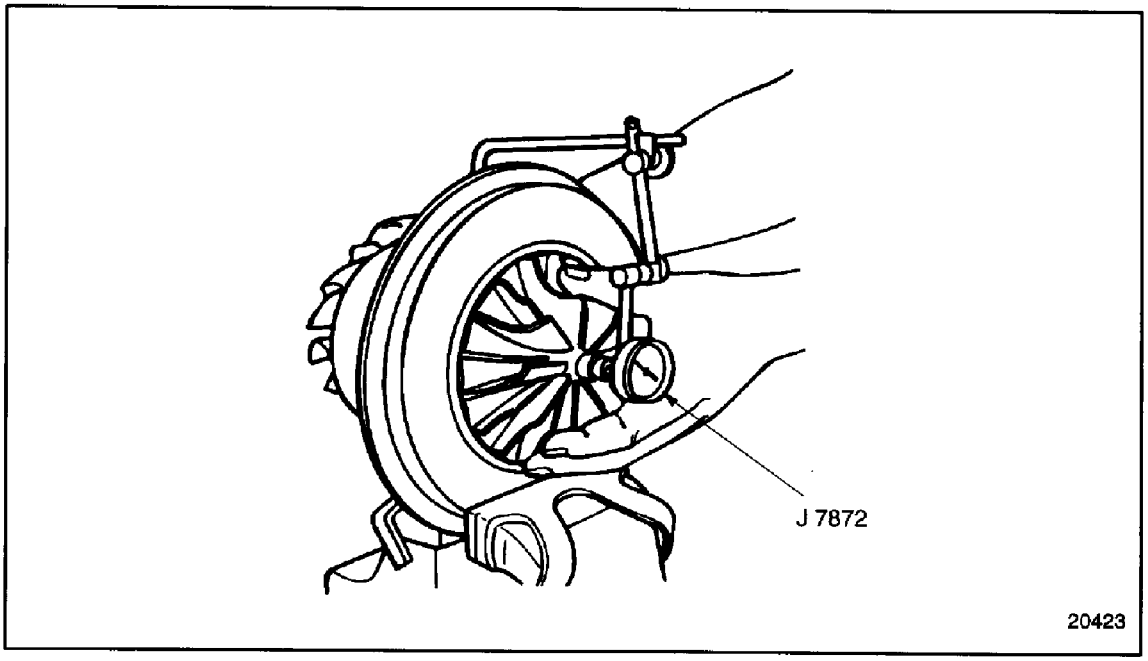

Figure 6-62 Checking Bearing Axial End Play

   [c] Move the shaft axially back and forth by hand. The total indicator reading (thrust float) should be 0.08-0.12 mm (0.003-0.005 in.) for K33 turbochargers. If the total dial indicator readings do not fall within the specified limits, replace the rotating assembly.

 Copyright © 2004 DETROIT DIESEL CORPORATION

5. Check the shaft radial movement as follows:

   [a] Install the turbo shaft checker, J 39164, to the oil drain opening of the center section. The special curved end of the tool must contact the wheel shaft through the oil outlet port and an internal opening in the center section casting. See Figure 6-63.

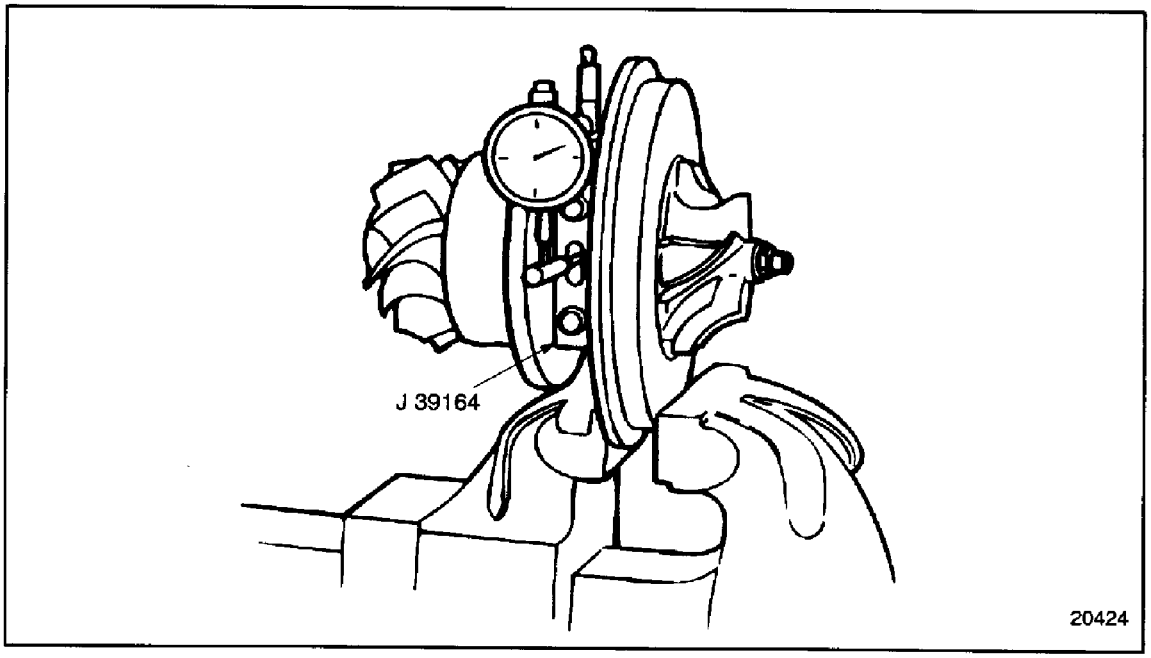

Figure 6-63 Checking Shaft Radial Movement

   [b] Install a dial indicator. See Figure 6-63.

   [c] Place the swivel adaptor, part of magnetic base dial indicator set, against the scribed line of the turbo shaft checker, J 39164.

   [d] Grasp each end of the rotating assembly and, applying equal pressure at each end, move the rotating shaft first toward and then away from the dial indicator, creating a transverse movement in the shaft. The total indicator reading (radial movement) should be 0.42-0.9 mm (0.016 -0.035 in.) for K33 turbochargers. If the total indicator readings do not fall within the specified limits, replace the rotating assembly.

(Rev. 2004) *All information subject to change without notice.*
6SE483 0401 Copyright © 2004 DETROIT DIESEL CORPORATION

6.7.4 Assembly of Turbocharger (Series 60G)

Use the following procedure to assemble the turbocharger:

NOTICE:
As the parts are assembled, cover the openings to prevent entry of dirt or other foreign material, which may cause component damage.

1. Cover all openings.
2. Position the CHRA into the turbine housing as marked at disassembly, and line up bolt holes. Apply anti-seize compound to bolts, and torque to 20 N·m (177 lb· in.).

NOTICE:
Always remove the compressor cover before positioning on the Center Housing Rotating Assembly (CHRA); otherwise, damage to the O-ring can result.

3. Position the compressor housing as marked at disassembly against the Center Housing Rotating Assembly (CHRA) and secure it in place with the bolts and clamps.
4. Lightly lubricate the threads of the bolt with engine oil and torque the nut to 15 N·m (133 lb· in.).

 Copyright © 2004 DETROIT DIESEL CORPORATION

6.7.5 Installation of Turbocharger (Series 60G)

To install the turbocharger:

1. Attach a chain hoist and a suitable lifting sling to the turbocharger assembly.
2. Remove any covers that were placed over the openings of the air inlet and exhaust outlet openings on the engine and turbocharger when the turbocharger was removed.
3. Remove any covers on the oil inlet and drain lines, and the oil inlet and drain openings on the turbocharger.
4. Place the turbocharger assembly into position on the exhaust manifold. Use a new gasket between the exhaust manifold and the turbine housing flange.
5. Secure the turbocharger to the exhaust flange. Torque the turbocharger to exhaust manifold and locknuts to 58-73 N·m (43-54 lb·ft).

CAUTION:

To avoid injury, wear a face shield or goggles.

NOTICE:

Do not use any type of lubricant on the inside of any air inlet hose or on the hose contact surfaces of the turbocharger compressor housing, CAC ducting or the intake manifold.

6. Install mixer and turbo inlet hose assembly onto the compressor inlet, and align the mixer bracket holes. Install bracket bolts and tighten.
7. Install elbow to compressor outlet and secure with V-band clamp.
8. Install the oil drain line, using a new gasket, between the opening in the bottom side of the turbocharger center housing and the drain hose that runs to the cylinder block. Torque the bolts to 30-38 N·m (22-28 lb·ft).
9. Refer to section 11.1.3 for verification of proper turbocharger installation.
10. Install water supply and return lines.

(Rev. 2004) *All information subject to change without notice.*
6SE483 0401 Copyright © 2004 DETROIT DIESEL CORPORATION

6.8 TURBOCHARGER SERIES 60 NATURAL GAS (AUTOMOTIVE) ENGINE

The Garrett GTA42 turbocharger is used on all Series 60G automotive engines. See Figure 6-64.

NOTE:
On April 2000, all Series 60 engines with GT40 and GT42 turbochargers were replaced by GTA40 and GTA42 turbos. The GTA turbo has a CHRA (center housing rotating assembly) with a boreless compressor wheel.

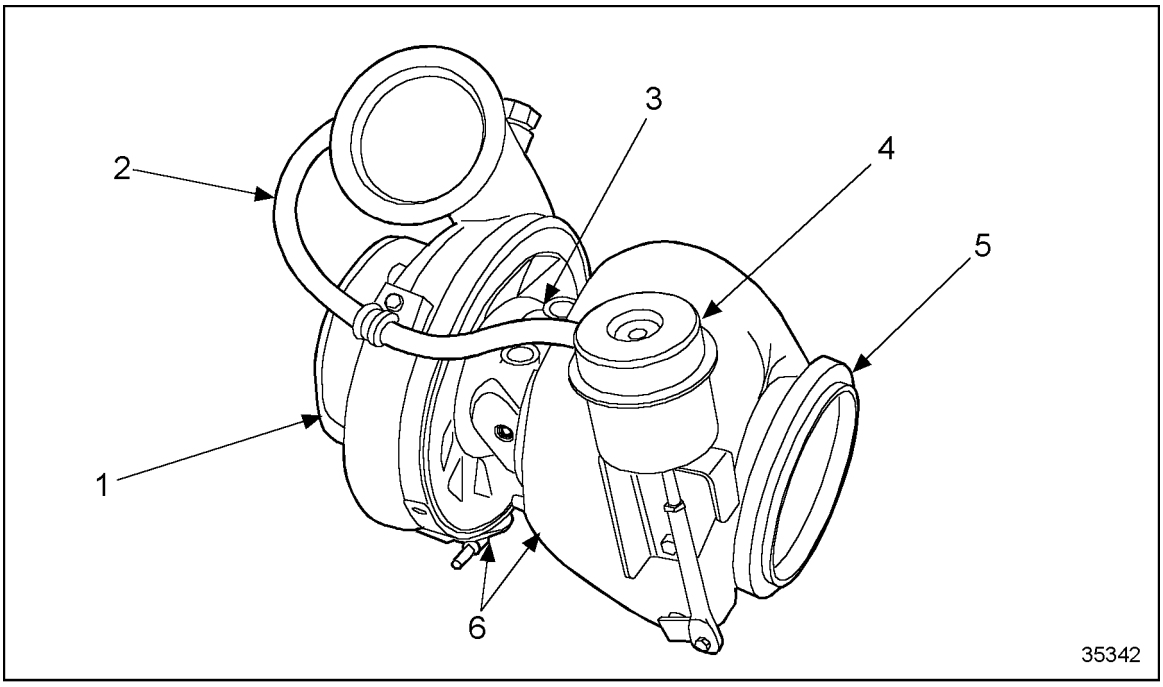

1. Compressor Housing
2. Actuator Hose
3. Water-cooled Center Housing
4. Wastegate Actuator
5. Turbine Housing
6. V-Band Joints

Figure 6-64 GTA42 Turbocharger Assembly (Coach)

The turbocharger is designed to increase the overall power and efficiency of the engine. Power to drive the turbocharger is extracted from the energy in the engine exhaust gas.

The CHRA consists of a turbine wheel and shaft, a compressor wheel, and a center housing that serves to support the rotating assembly, bearings, seals, a turbine housing, and a compressor housing. The center housing has connections for oil inlet, oil outlet, water inlet and water outlet fittings.

The rotating assembly consists of a turbine wheel and shaft assembly, piston ring(s), thrust spacer, compressor wheel, and wheel retaining nut. The rotating assembly is supported on two pressure-lubricated bearings that are retained in the center housing by snap rings. Internal oil passages are drilled in the center housing to provide lubrication to the turbine wheel shaft bearings, thrust washer, thrust collar, and thrust spacer. Internal water passages provide cooling and subsequent protection against oil cooking in the housing.

 Copyright © 2004 DETROIT DIESEL CORPORATION

The turbine housing is a heat-resistant alloy casting that encloses the turbine wheel and provides a flanged engine exhaust gas inlet and an axially located turbocharger exhaust gas outlet. The turbine housing is secured to the turbine end of the center housing. An internal turbine bypass valve, commonly called a wastegate, allows exhaust gas to flow around the turbine wheel. This provides control over the maximum boost pressure.

The wastegate is controlled with a pneumatic actuator mounted on the side of the turbine housing. The Series 60G coach engine turbocharger has an actuator with a single hose port on the top side of the actuator can with a silicon hose that runs to a port on the compressor cover. See Figure 6-64. Air pressure from the compressor outlet is fed through the line to the top side of the actuator, which opens the wastegate valve at a specified pressure.

The turbocharger is mounted on the exhaust outlet flange of the engine exhaust manifold. After the engine is started, the exhaust gases flow from the engine and through the turbine housing causing the turbine wheel and shaft to rotate. See Figure 6-65.

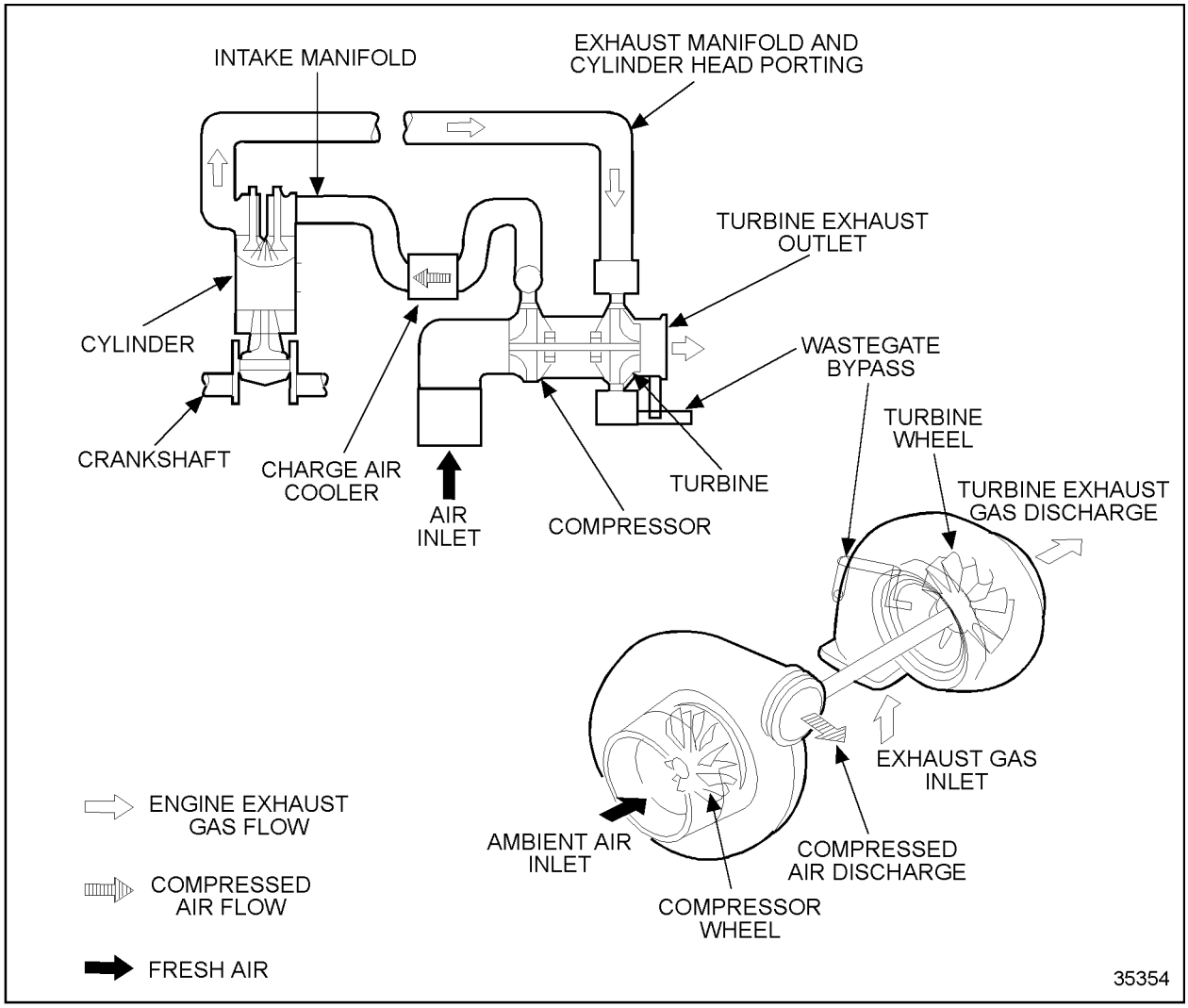

Figure 6-65 Schematic Air Flow Diagram (Series 60G Automotive)

(Rev. 2004) *All information subject to change without notice.*
6SE483 0401 Copyright © 2004 DETROIT DIESEL CORPORATION

The gases are discharged into the exhaust system after passing through the turbine housing. On automotive engines, an oxygen sensor and exhaust temperature sensor are installed within 12 inches of the turbocharger turbine outlet. A harness connects the sensors to the ECM.

The compressor wheel, in the compressor housing, is mounted on the opposite end of the turbine wheel shaft and rotates with the turbine wheel. The compressor wheel draws in clean air, compresses it, and delivers high pressure air through the intake manifold to the engine cylinders.

 Copyright © 2004 DETROIT DIESEL CORPORATION

Oil for lubricating the turbocharger is supplied under pressure through an external oil line extending from the oil filter adaptor to the top of the center housing. Water for cooling the bearing housing is supplied from the oil cooler, and is returned to the top of the thermostat housing. See Figure 6-66.

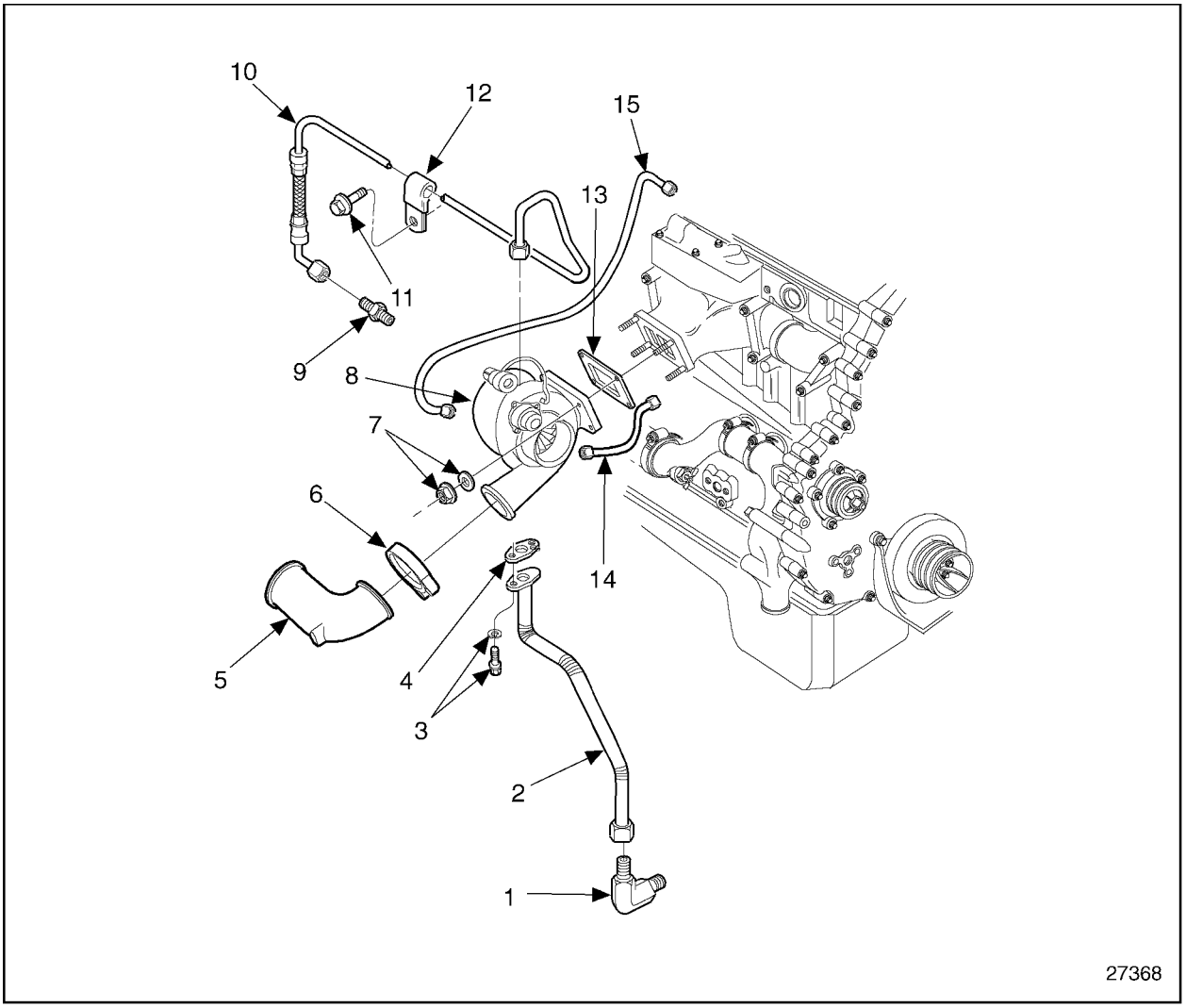

1. Elbow, Oil Drain Tube
2. Tube, Turbo Oil Drain
3. Bolt, and Lockwashers, Oil Drain Tube Mounting
4. Gasket, Oil Drain Tube
5. Elbow
6. Clamp
7. Nut, and Washer Turbo Mounting
8. Turbocharger Assembly
9. Connector, Oil Supply Tube (from oil filter adaptor)
10. Tube Assembly, Turbo Oil Supply
11. Bolt, Oil Supply Tube Clip
12. Clip, Oil Supply Tube
13. Gasket, Turbo Exhaust Inlet
14. Water Supply Line
15. Water Return Line

Figure 6-66 Turbocharger Oil/Water Lines Series 60 Gas (Automotive)

(Rev. 2004) *All information subject to change without notice.*
6SE483 0401 Copyright © 2004 DETROIT DIESEL CORPORATION

From the oil inlet in the center housing, the oil flows through the drilled oil passages in the housing to the shaft bearings, thrust ring, thrust bearing, and backplate or thrust plate. See Figure 6-67.

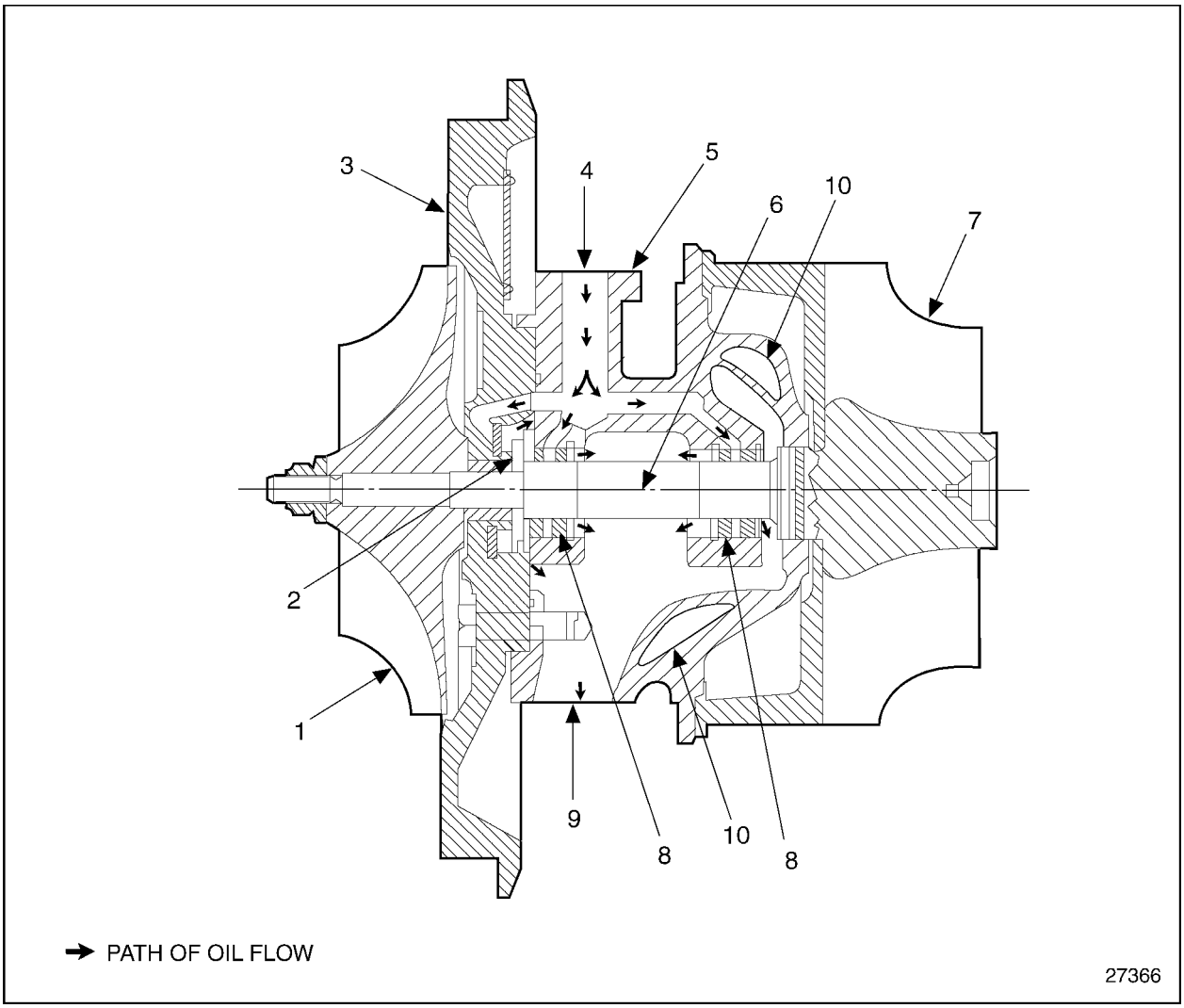

1. Compressor Wheel
2. Thrust Bearing
3. Backplate
4. Oil Inlet
5. Center Housing
6. Shaft
7. Turbine Wheel
8. Shaft Bearings
9. Oil Outlet
10. Water passages

Figure 6-67 Turbocharger Oil Flow Diagram (Series 60G, Automotive)

The oil returns by gravity to the engine oil pan through an external oil line extending from the bottom of the turbocharger center housing to the cylinder block. Water flows through the bearing housing in a U-shape flow path, removing heat generated by the hot exhaust gas in the turbine.

 Copyright © 2004 DETROIT DIESEL CORPORATION

6.8.1 Repair or Replacement of Turbocharger (Series 60 Gas Automotive Engine)

To determine if repair is possible or replacement of the turbocharger is necessary perform the following procedure. See Figure 6-68.

(Rev. 2004) *All information subject to change without notice.*
6SE483 0401 Copyright © 2004 DETROIT DIESEL CORPORATION

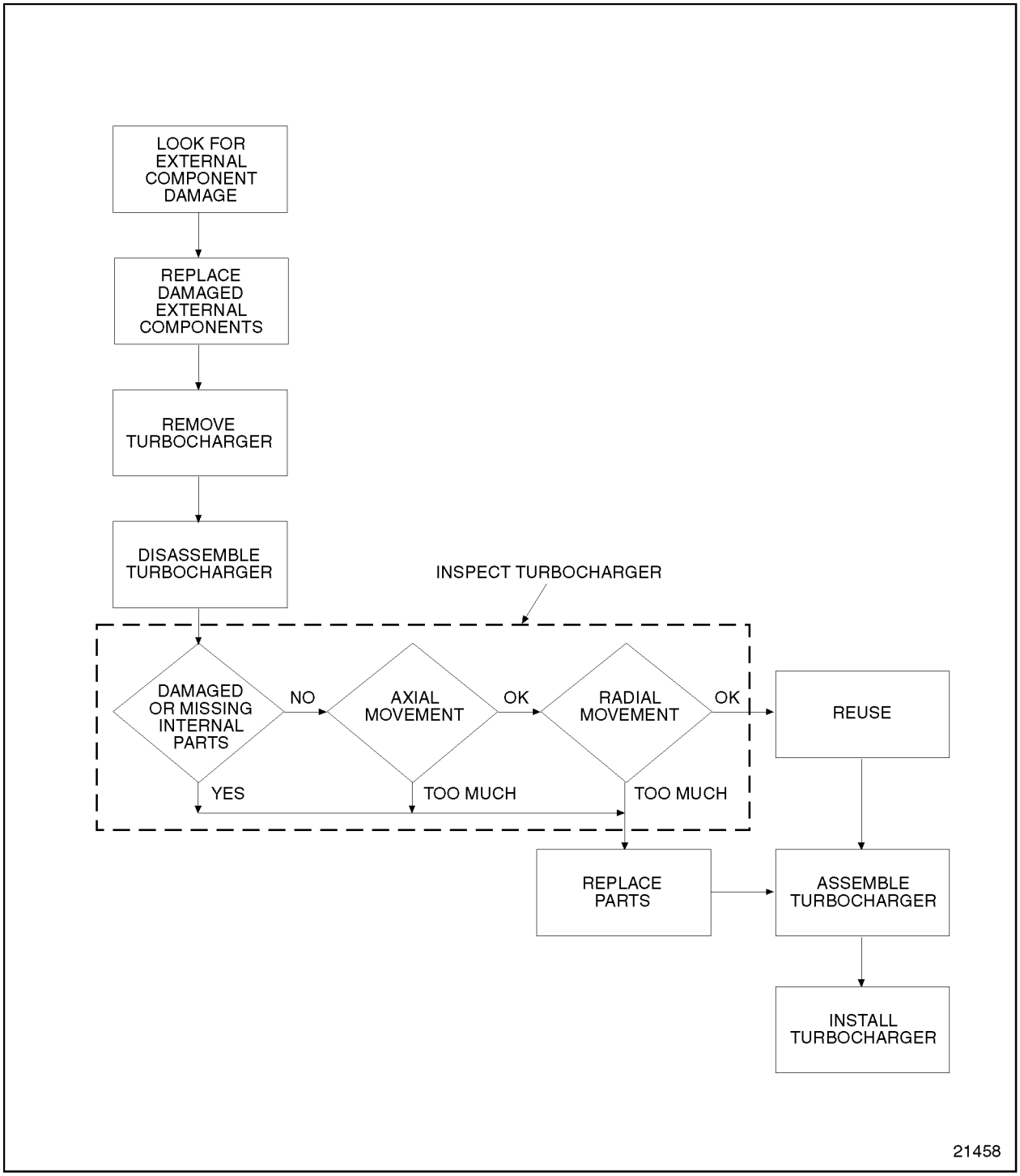

Figure 6-68 Flowchart for Repair or Replacement of Turbocharger (Series 60 Gas, Automotive)

 Copyright © 2004 DETROIT DIESEL CORPORATION

6.8.2 Cleaning and Removal of Turbocharger (Series 60G Automotive Engine)

Cleaning the turbocharger is not necessary before removal.

CAUTION:

To avoid injury from hot surfaces, allow engine to cool before removing any component. Wear protective gloves.

Prior to removal, visually check for:

1. Missing or loose nuts and bolts.
2. Loose or damaged intake and exhaust ducting.
3. Damaged oil supply and drain lines.
4. Cracked or deteriorating turbocharger housings.
5. External oil leakage.
6. Damaged water supply and return lines.
7. Replace damaged parts with new parts.

To remove the turbocharger, perform the following:

NOTICE:

Do not attempt to remove carbon or dirt buildup on the compressor or turbine wheels without removing the turbocharger from the engine. If chunks of carbon are left on the blades, an unbalanced condition will exist and subsequent failure of the bearings will result if the turbocharger is operated. However, it is not necessary to disassemble the turbocharger to remove dirt or dust buildup.

1. Disconnect and remove the CAC ducting at the compressor housing.
2. Disconnect and remove the air inlet hose attached to the compressor housing.
3. Disconnect the exhaust outlet pipe from the turbine housing of the turbocharger. For proper operation, the turbocharger rotating assembly must turn freely. Whenever the exhaust ducting is removed, spin the turbine wheel by hand.
4. Remove the inlet oil line from the top of the center housing.
5. Remove the oil drain line from the bottom of the center housing.

NOTE:
Be sure to drain coolant before removing water lines from bearing housing.

(Rev. 2004) *All information subject to change without notice.*
6SE483 0401 Copyright © 2004 DETROIT DIESEL CORPORATION

6. Remove water lines from bearing housing.
7. Remove actuator return line on bottom port of actuator.
8. Attach a chain hoist and a suitable lifting sling to the turbocharger assembly.
9. Remove the nuts securing the turbocharger assembly to the exhaust manifold. Then, lift the turbocharger assembly away from the engine and place it on a bench.
10. Cover the end of the oil drain line, the oil outlet line, water supply, water return, the air inlet and the exhaust outlet openings on the engine and turbocharger to prevent the entry of foreign material.

CAUTION:

To avoid injury from improper use of chemicals, follow the chemical manufacturer's usage, handling, and disposal instructions. Observe all manufacturer's cautions.

6.8.3 Disassembly of Turbochargers (Series 60G Automotive Engine)

Disassemble the turbocharger as follows:

NOTE:
Clean the exterior of the turbocharger with a non-caustic cleaning solvent before disassembly.

1. Mark the related positions of the compressor housing, center housing and turbine housing with a punch or scribe to assure reassembly in the same relative position.

NOTICE:

Exercise care when removing the compressor housing and turbine housing to prevent damage to the compressor and turbine wheels.

2. Loosen the V-band coupling securing the compressor housing to the backplate assembly and remove the compressor housing and V-band.

 Copyright © 2004 DETROIT DIESEL CORPORATION

3. Perform the following steps to disassemble the GTA42 turbocharger: See Figure 6-69.
   [a] Loosen the V-band coupling securing the turbine housing to the center housing.
   [b] Remove the turbine housing from the center housing.

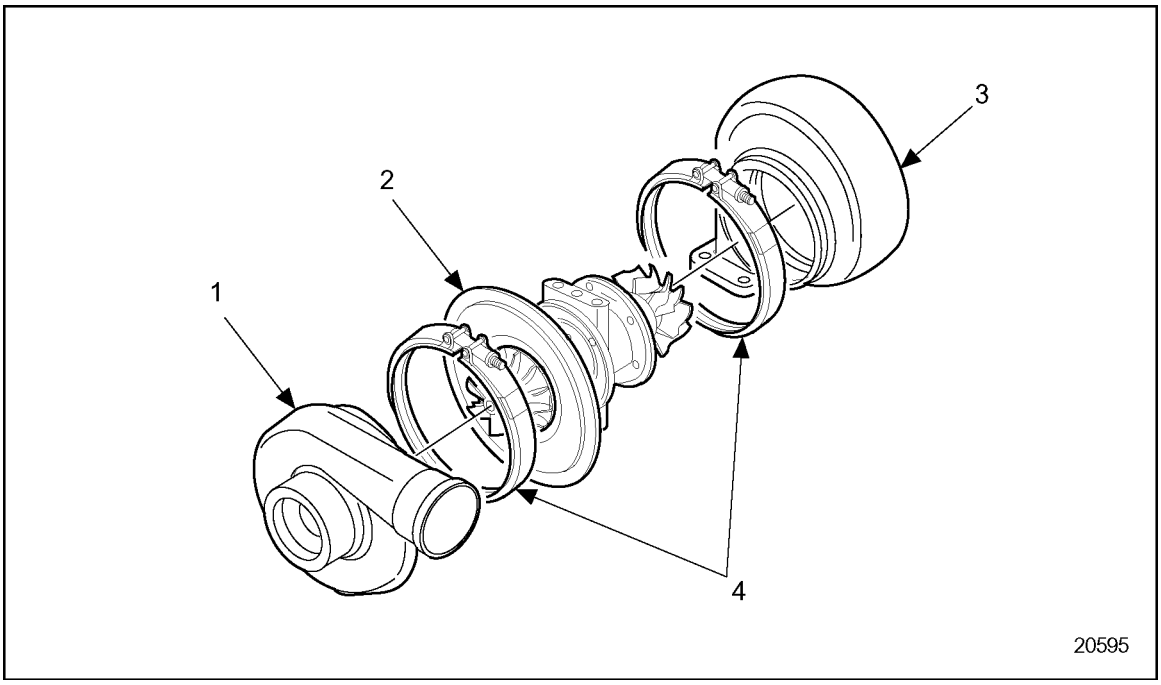

1. Compressor Housing
2. Compressor Housing and Rotating Assembly
3. Turbine Housing
4. V-Band Couplings

Figure 6-69 GTA42 Turbocharger

(Rev. 2004) *All information subject to change without notice.*
6SE483 0401 Copyright © 2004 DETROIT DIESEL CORPORATION

6.8.3.1 Inspection and Cleaning of Turbocharger (Series 60G Automotive Engine)

Damage can result from a contaminated exhaust system. Any debris left in the exhaust system after service work can fall back into the exhaust wheel. If large enough, these particles may cause turbine wheel damage at initial engine startup. The exhaust manifold and exhaust piping attached to the turbocharger should also be inspected for debris and cleaned, if necessary, before being installed.

Any time the charge air cooler is removed, all charge air cooling system components *must* be inspected to make sure they are clean and free of any casting slag, core sand, welding slag, or any other contaminants that could break free during engine operation and damage the turbine wheel.

Inspect the disassembled turbocharger, discarding any damaged parts, in the following manner:

1. Visually check for nicked, crossed or stripped threads.
2. Visually check the turbine wheel shroud and turbine wheel for signs of rubbing.
3. Visually check the compressor wheel for signs of rubbing or damage from foreign material. The wheel must be free of dirt and other foreign material.
4. Check actuator can for external damage.
5. Check actuator pressure setting; refer to section 6.8.4.
6. Check compressor cover recirculation valve (coach only).
7. Visually check wastegate lever arm, valves, and ports. Ensure the ports are completely covered by the valves.

 Copyright © 2004 DETROIT DIESEL CORPORATION

8. Check the bearing axial end play:

   [a] Clamp the center housing assembly in a bench vise equipped with soft jaws. See Figure 6-70.

   [b] Fasten the dial indicator and magnetic clamp, J 7872-2 , to the center housing so that the indicator tip rests on the end of the rotating shaft on the compressor side. See Figure 6-70.

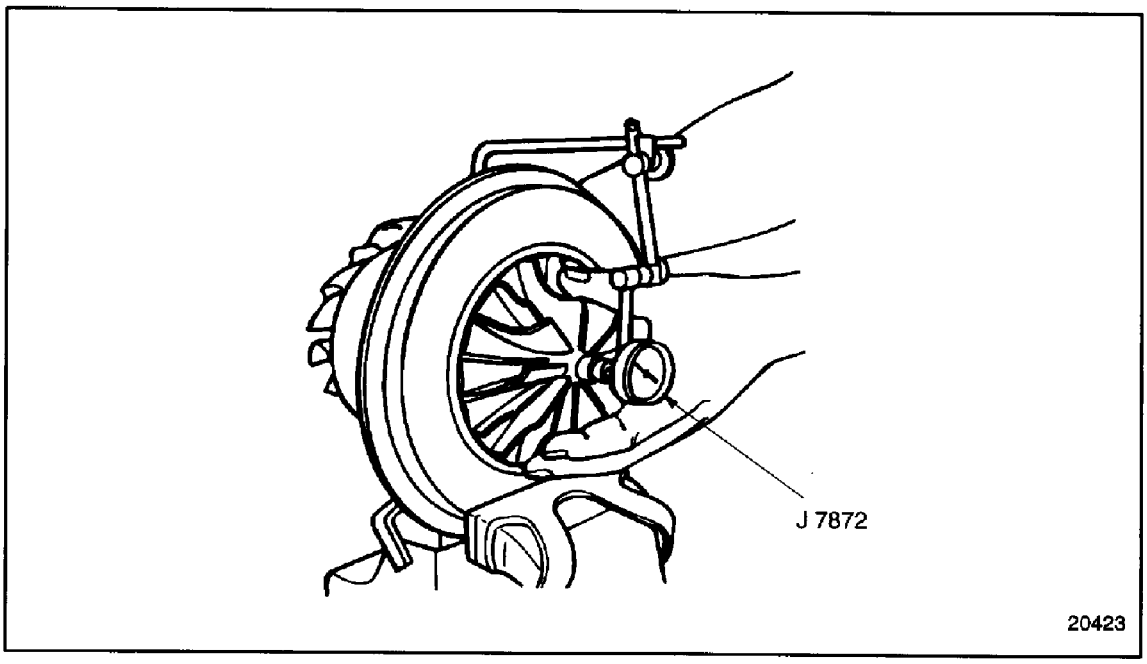

Figure 6-70 Checking Bearing Axial End Play

   [c] Move the shaft axially back and forth by hand. The total indicator reading (thrust float) should be 0.0127-0.0889 mm 0.0005-0.0035 in.). If the total dial indicator readings do not fall within the specified limits, replace the rotating assembly.

9. Check the shaft radial movement as follows:
   Due to the internal construction of the GTA42 bearing housing, access to the shaft through the oil drain is not possible. Therefore, radial movement cannot be accurately measured to determine the condition of radial turbine bearings.

   To determine the general condition of the radial bearings, check radial end play after the turbocharger is cleaned and assembled. Push on the end of the shaft, towards the side of the compressor (or turbine) housing. If the wheel contacts either housing, the radial bearings may be worn out, and the CHRA should be replaced (be sure to check if the housing is seated and installed correctly also).

10. Service of the center housing rotating assembly (CHRA)The CHRA is serviced by replacement only. Do not attempt disassembly of the CHRA, as possible shaft imbalance and damage may result.

(Rev. 2004) *All information subject to change without notice.*
6SE483 0401 Copyright © 2004 DETROIT DIESEL CORPORATION

6.8.4 Checking Wastegate Calibration for the Series 60G Automotive Engine

This procedure provides a method for verifying proper wastegate calibration.

1. Remove hose from wastegate actuator (for gensets, remove line on top side of can).
2. Set-up an indicator at the end of the wastegate actuator adjusting rod to measure actuator rod travel. The indicator should have a minimum travel of 0.100 in.
3. Connect regulator and pressure gage set-up to wastegate actuator. See Figure 6-71.

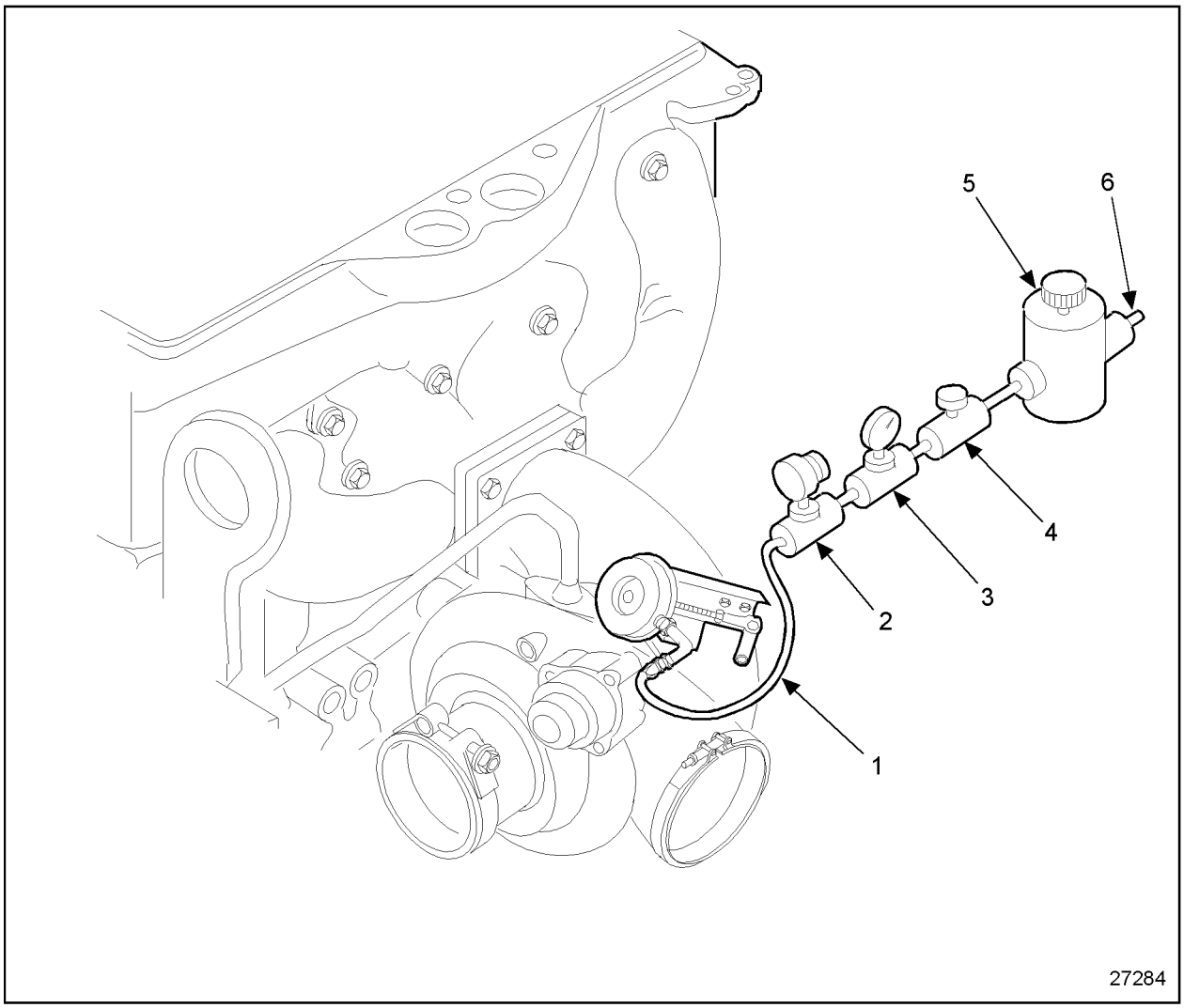

1. Hose to Wastegate Actuator
2. Vent Valve
3. Pressure Gage
4. Supply Air Shutoff Valve
5. Pressure Regulator
6. Shop Air Supply

Figure 6-71 Checking Wastegate Calibration for the Series 60G Automotive Engine

 Copyright © 2004 DETROIT DIESEL CORPORATION

4. Apply specified calibration pressure (listed in Table 6-3) to the wastegate actuator.

Model	Rating	Set Pressure Travel at 0.04 in. Rod
Coach	330 Hp	24 lb/in.^{2}

Table 6-3 Series 60G Wastegate Calibration Pressure at 0.04 in. Rod Travel

NOTICE:
For genset turbochargers, NEVER apply pressure to bottom part of actuator can. Damage to actuator may result.

5. Close air supply shutoff valve. The pressure should hold at the specified pressure. If not, check air hose and fitting connections for leaks. If none are found, replace wastegate actuator assembly. Refer to section 6.8.5.
6. Open vent to relieve pressure. Check gage for zero pressure reading. Adjust regulator to zero pressure and close vent valve.
7. Adjust dial indicator so it just contacts the actuator rod end and adjust to zero reading.
8. Open air supply shutoff valve and slowly adjust regulator until dial indicator reads 0.040 in. Switch pressure on and off, opening and closing supply air and vent valves, to make certain dial indicator travel is from 0.00 in. to 0.040 in. and that the pressure reading is consistent.
9. For currently calibrated wastegate actuator, a pressure within ± 0.25 lb/in.^{2} of the value listed in Table 6-3, will be required to obtain precisely 0.040 in. actuator travel. If the pressure required is outside this range, wastegate adjustment is necessary; refer to section 6.8.5.

(Rev. 2004) *All information subject to change without notice.*
6SE483 0401 Copyright © 2004 DETROIT DIESEL CORPORATION

6.8.5 Removal and Replacement of Series 60G Wastegate Actuator

This procedure describes the removal of a actuator currently mounted on a turbocharger, and the replacement with a new service actuator. Further adjustment of the actuator will be necessary to achieve the correct pressure setting, listed in Table 6-3.

1. Remove actuator hose from the top side of the actuator can. With the pressure gage set-up (see Figure 6-71), apply enough pressure to the actuator can until the rod begins to move; refer to section 6.8.6.
2. Remove the retaining clip that holds the actuator rod end on the wastegate lever pin. Lift rod off the wastegate lever pin.

NOTICE:
Never remove the rod end from the wastegate lever pin unless pressure is applied to the top side actuator port; otherwise, damage to the actuator diaphragm may result.

3. Remove the lock nuts that secure the actuator can to the base of the actuator bracket, and remove the can from the turbocharger assembly.

Replace wastegate actuator as follows:

1. Install actuator can on bracket; tighten lock nuts.
2. Using pressure gage set-up, apply enough pressure to the new service actuator can until the rod begins to move.
3. Adjust actuator rod end by turning either clockwise or counterclockwise on rod so that the rod end hole lines up with the wastegate lever arm, while wastegate is held shut pin, slip rod over pin.
4. Before installing the retaining clip again, the rod end will need to be adjusted to the correct setting. Refer to section 6.8.6.

 Copyright © 2004 DETROIT DIESEL CORPORATION

6.8.6 Setting the Wastegate on the Series 60G Automotive Engine

This procedure describes the set pressure adjustment of an installed wastegate actuator. Before following this procedure, first check the actuator set pressure to see if adjustment is needed refer to section 6.8.4.

1. Loosen the jam nut that secures the rod end on the actuator rod. If locking collar is present on the actuator rod, remove and discard collar, see Figure 6-72.

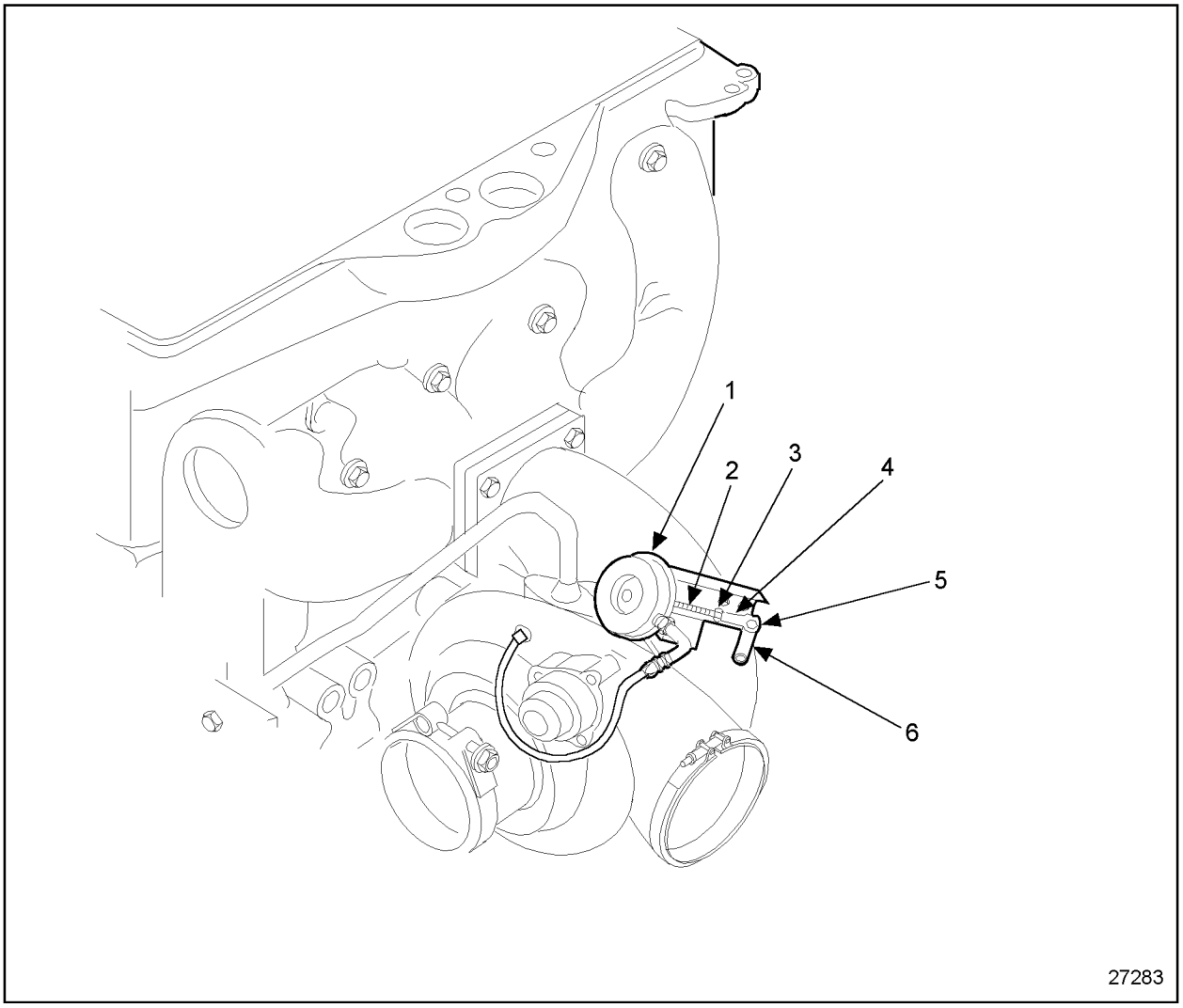

1. Wastegate Actuator Assembly
2. Locking Collar
3. Jam Nut
4. Adjusting Rod End
5. Retainer Clip
6. Wastegate Lever and Pin Assembly

Figure 6-72 Wastegate Adjustment

(Rev. 2004) *All information subject to change without notice.*
6SE483 0401 Copyright © 2004 DETROIT DIESEL CORPORATION

2. Remove the retaining clip that holds the actuator rod end on the wastegate lever arm pin.

NOTICE:
For genset actuator, never apply pressure to the bottom side of actuator port. Damage to the actuator may result.

3. Using pressure gage setup (see Figure 6-72) apply enough pressure to the top side actuator can port until the rod begins to move, lifting the wastegate valve off of it's seal.
4. Slip rod end off the wastegate lever arm pin.
5. Adjust rod as needed
   - To INCREASE pressure setting at 0.04 in. turn rod end CLOCKWISE.
   - To DECREASE pressure setting at 0.04 in. turn rod end COUNTERCLOCKWISE.
6. With pressure still applied to actuator, replace rod end on wastegate lever arm
7. Check actuator set pressure again; refer to section 6.8.6.
8. If actuator is still out of adjustment, repeat this procedure again.
9. If actuator is within specified set pressure, re-install retaining clip on wastegate lever arm pin.
10. Tighten jam nut to secure rod end.

 Copyright © 2004 DETROIT DIESEL CORPORATION

6.8.7 Assembly of Turbocharger Series 60G Automotive Engine

Use the following procedure to assemble the turbocharger:

NOTICE:

As the parts are assembled, cover the openings to prevent entry of dirt or other foreign material, which may cause component damage.

1. Cover all openings.
2. Position the turbine housing as marked at disassembly against the center housing and secure it in place.

NOTICE:

Failure to properly orient the Tee-bolt end of the clamp can result in an exhaust leak, turbine wheel damage or both.

3. To assemble the GTA42 turbochargers, position the V-band coupling between the turbine housing and center housing so that the Tee-bolt end does not interfere with the turbine housing. Then tighten the V-band coupling nut, as follows:
   [a] Lubricate the toggle bolt threads with a high temperature anti-seize compound.
   [b] Torque the nut on the V-band toggle bolt to approximately 18 N·m (160 lb· in.).

NOTE:
Do not pull a misaligned turbine housing into alignment with the V-band coupling. The parts must be aligned and seated first.

   [c] Loosen the V-band coupling nut to approximately 6 N·m (50 lb· in.) torque, then torque the nut to 12-15 N·m (106-130 lb· in.).
4. Position the compressor housing as marked at disassembly against the backplate assembly and secure it in place with the V-band coupling.
5. Lightly lubricate the threads of the toggle bolt with engine oil and torque the nut to 12-15 N·m (106-130 lb· in.). This completes the assembly of GTA42 turbocharger.

NOTICE:

The 5/8 in. hex-head turbine housing bolts replaced 3/8 in. hex-head bolts. The 5/8 in. hex-head bolts are required to ensure sufficient clamp load.

6. Secure the TMF turbine housing with four 5/8 in. hex head bolts.
7. Torque the bolts to 34 N·m (300 lb· in.).

(Rev. 2004) *All information subject to change without notice.*
6SE483 0401 Copyright © 2004 DETROIT DIESEL CORPORATION

6.8.8 Installation of Turbocharger Series 60G Automotive Engine

To install the turbocharger:

1. Attach a chain hoist and a suitable lifting sling to the turbocharger assembly.
2. Remove any covers that were placed over the openings of the air inlet and exhaust outlet openings on the engine and turbocharger when the turbocharger was removed.
3. Remove any covers on the oil inlet and drain lines, and the oil inlet and drain openings on the turbocharger.
4. Place the turbocharger assembly into position on the exhaust manifold. Use a new gasket between the exhaust manifold and the turbine housing flange.
5. Secure the turbocharger to the exhaust flange. Tighten the nuts just enough to hold the turbocharger in place.
6. Slide the charge air cooler air inlet tube hose over the compressor housing outlet opening and secure it in place with the hose clamps.

CAUTION:

To avoid injury, wear a face shield or goggles.

NOTICE:

Do not use any type of lubricant on the inside of any air inlet hose or on the hose contact surfaces of the turbocharger compressor housing, CAC ducting or the intake manifold.

7. Torque the turbocharger to exhaust manifold locknuts to 58-73 N·m (43-54 lb·ft).
8. Install the oil drain line, using a new gasket, between the opening in the bottom side of the turbocharger center housing and the drain hose that runs to the cylinder block. Torque the bolts to 30-38 N·m (22-28 lb·ft).
9. Refer to section 11.1.3 for verification of proper turbocharger installation.
10. Install water supply and return lines.

 Copyright © 2004 DETROIT DIESEL CORPORATION

6.9 RECIRCULATION VALVE FOR SERIES 60G AUTOMOTIVE ENGINE

The Series 60G automotive GT42 turbocharger requires a boost recirculation valve to reduce air system pressure pulsations and turbocharger surging during engine throttling operations. The recirculation valve is remote-mounted by the OEM and routes air from the high-pressure boost side back to the air inlet side during deceleration. The recirculation valve is a large solenoid valve that is triggered to open by DDEC through a digital output pin of the ECM. See Figure 6-73 for recirculation valve.

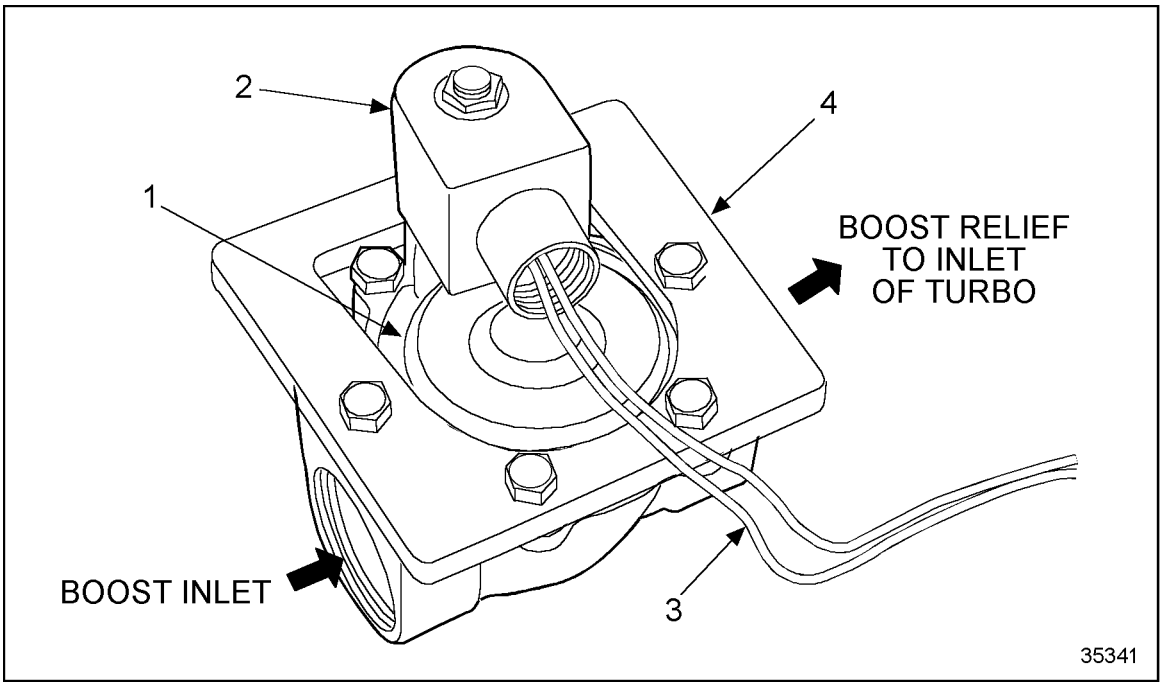

1. Recirculation Valve Body
2. 12V Coil
3. 2-pin Connector
4. Bracket

Figure 6-73 Recirculation Valve

(Rev. 2004) *All information subject to change without notice.*
6SE483 0401 Copyright © 2004 DETROIT DIESEL CORPORATION

6.9.1 Replacement of the Recirculation Valve for Series 60G Automotive Engine

The recirculation valve isa non-serviceable component and should be replaced as a unit. No adjustment is required.

6.9.2 Removal of the Recirculation Valve for Series 60G Automotive Engine

Remove the recurculation valve as follows:

1. Disconnect the inlet and outlet hoses from the valve.
2. Disconnect the two-pin electrical connector.
3. Remove the two bolts that attach the recirculation valve to the mounting surface.

NOTE:
The valve has a mounting bracket attached to its body. Do not remove the bolts in the valve body to gain access to the valve. Removal of these bolts can expose the valve diaphragm and cause permanent damage.

4. If replacing the unit, remove the inlet and outlet fittings from the valve.

6.9.3 Installation of the Recirculation Valve for Series 60G Automotive Engine

Install the recirculation valve as follows:

1. Position the valve on the mounting surface and secure it in place with the two mounting bolts.

NOTE:
Ensure the arrow on the base of the valve corresponds with the flow of air from the turbo outlet side to the turbo inlet side.

2. Connect the inlet and outlet hoses to the valve fittings.
3. Connect the two-pin electrical connector.
4. Check for any leaks in the system.

 Copyright © 2004 DETROIT DIESEL CORPORATION

6.10 CHARGE AIR COOLER

On vehicle and industrial engines, a CAC (charge air cooler) is normally mounted ahead of the cooling system radiator. On keel-cooled marine engines the charge air cooler is incorporated into the keel cooler tank. On heat exchanger-cooled engines, the charge air cooler is part of the intake manifold. The compressed air leaving the turbocharger is directed through the CAC before it goes to the air inlet side of the intake manifold. See Figure 6-74. Refer to section 4.4 for CAC Water Pump.

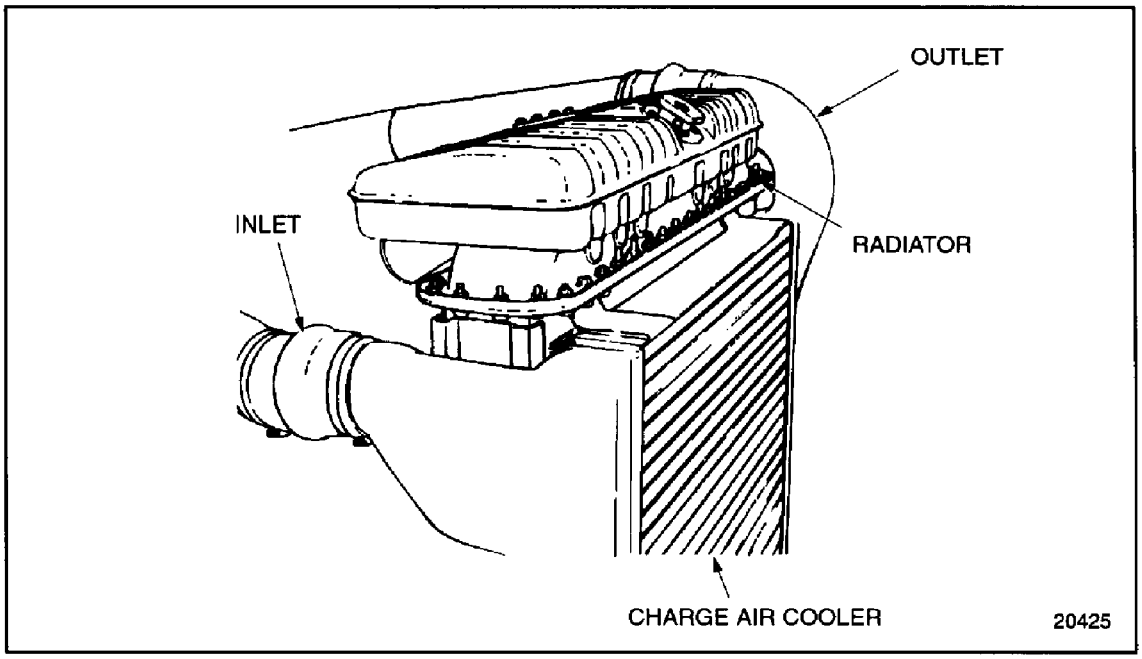

Figure 6-74 Typical Charge Air Cooler

(Rev. 2004) *All information subject to change without notice.*
6SE483 0401 Copyright © 2004 DETROIT DIESEL CORPORATION

The CAC is used to reduce the temperature of the compressed air leaving the turbocharger before it reaches the intake manifold. This permits a more dense charge of air to be delivered to the engine.

Cooling is accomplished by incoming air flowing past the tubes and fins of the charge air cooler. The compressed intake charge flowing inside the CAC core transfers the heat to the tubes and fins where it is picked up by the incoming outside air (vehicle and industrial engines) or raw water (marine engines). See Figure 6-75. See Figure 6-76 and see Figure 6-77.

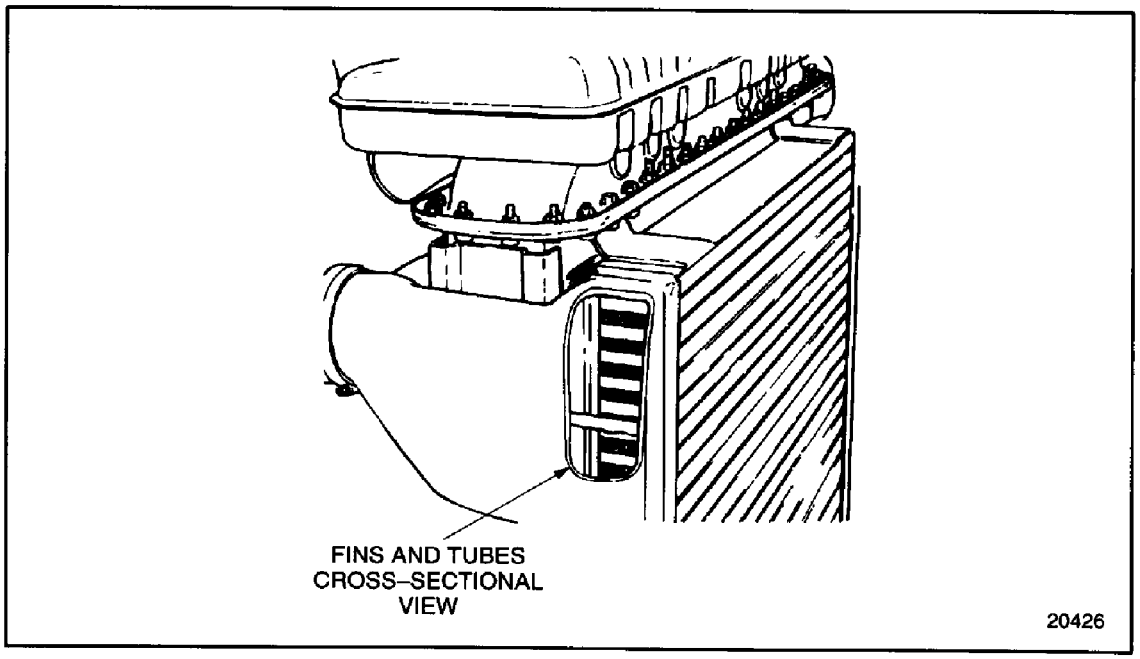

Figure 6-75 Radiator—mounted Charge Air Cooler Cross-section

 Copyright © 2004 DETROIT DIESEL CORPORATION

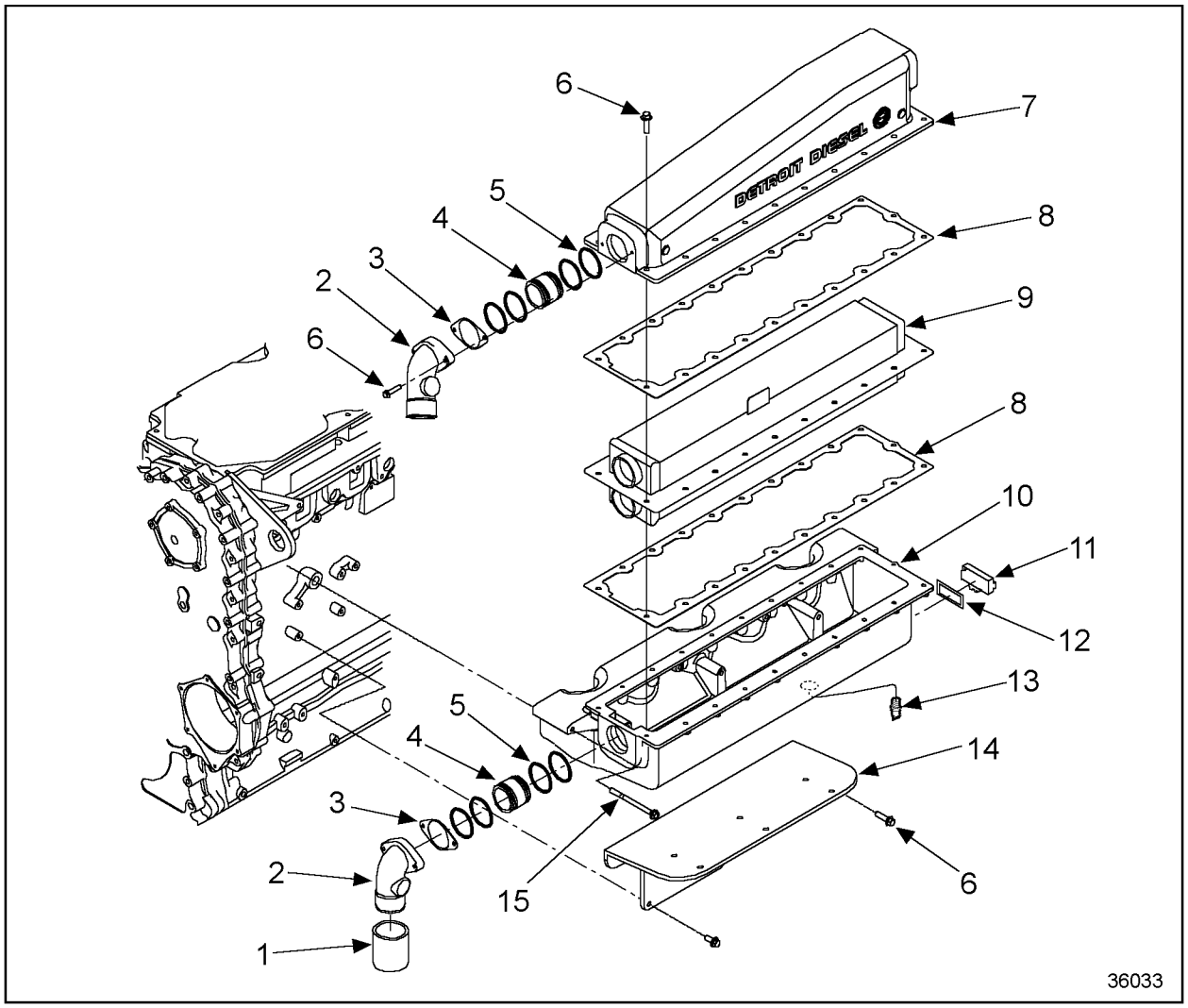

1. Hose
2. Elbow
3. Gasket
4. Sleeve
5. Seal Ring
6. Bolt
7. Housing Upper
8. Gasket
9. CAC Matrix
10. Housing Lower
11. Sensor
12. Seal Ring
13. Air Temperature Sensor
14. Bracket
15. Bolt

Figure 6-76 Heat Exchanger Charge Air Cooler and Related Parts

(Rev. 2004) *All information subject to change without notice.*
6SE483 0401 Copyright © 2004 DETROIT DIESEL CORPORATION

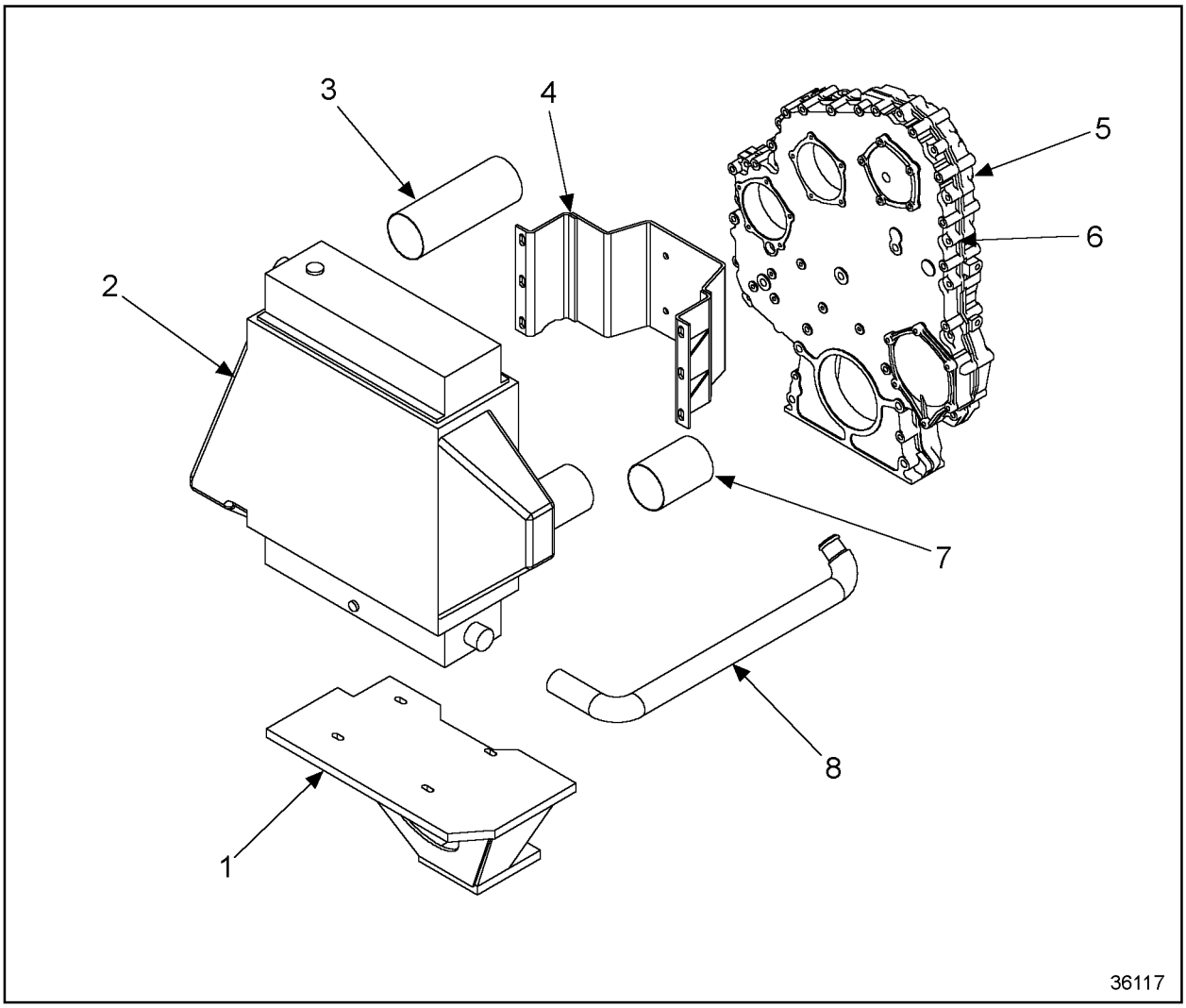

1. Bracket, Charge Air Cooler Mounting
2. Charge Air Cooler
3. Tube, Charge Air Cooler Air Inlet
4. Bracket, Charge Air Cooler Rear Mounting
5. Gear Case
6. Gear Case Cover
7. Tube, Charge Air Cooler Air Inlet
8. Inlet Tube, Raw Water

Figure 6-77 Keel—Cooled Commercial Marine Charge Air Cooler

 Copyright © 2004 DETROIT DIESEL CORPORATION

On diesel engines, flexible rubber couplings and hose clamps are used to secure the ductwork to the turbocharger, the CAC inlet and outlet, and the intake manifold.

Ductwork is used to transfer the air from the turbocharger outlet to the CAC, and from there to the intake manifold. See Figure 6-78. See Figure 6-79.

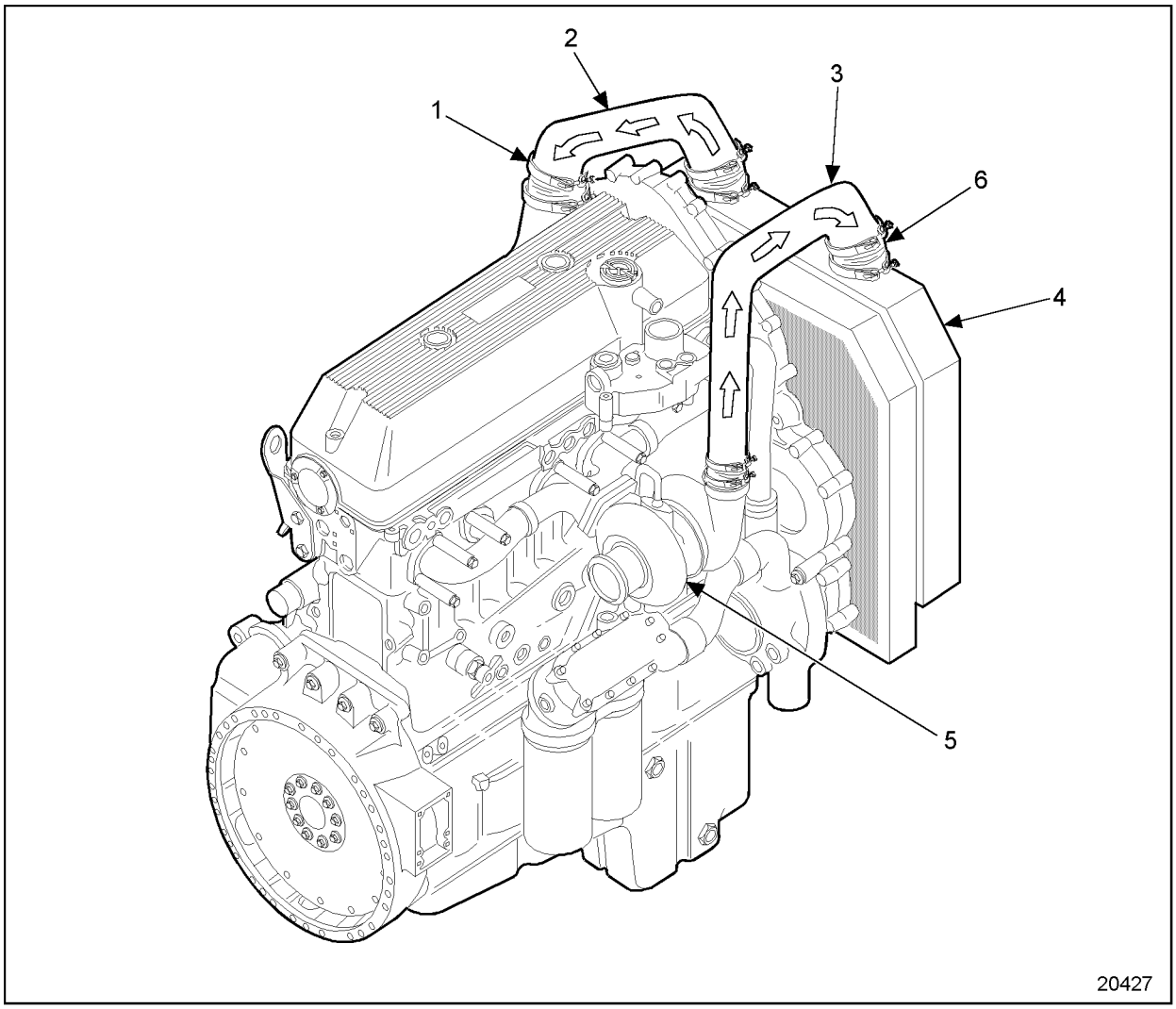

1. Coupling Hose Clamp
2. Charge Air Cooler Outlet Duct
3. Charge Air Cooler Inlet Duct
4. Charge Air Cooler
5. Turbocharger
6. Coupling Hose Clamp

Figure 6-78 Radiator—mounted Charge Air Cooler and Related Parts (Series 60 Diesel Engine)

(Rev. 2004) *All information subject to change without notice.*
6SE483 0401 Copyright © 2004 DETROIT DIESEL CORPORATION

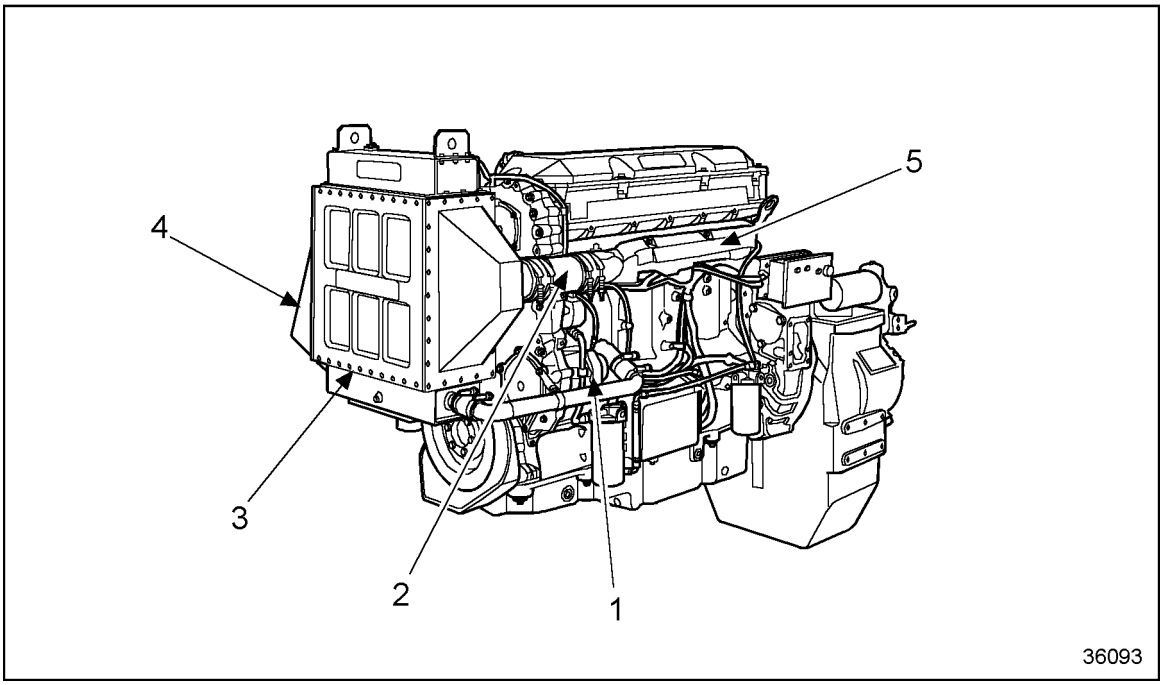

1. Raw Water Pump
2. Charge Air Cooler Outlet Pipe
3. Charge Air Cooler
4. Charge Air Cooler Inlet
5. Air Intake Manifold

Figure 6-79 Keel—Cooled Charge Air Cooler and Related Parts (Series 60 Diesel Engine)

 Copyright © 2004 DETROIT DIESEL CORPORATION

For the Series 60G Genset engines, hoses connect steel piping from the turbo to the CAC, and from the CAC to the throttle. See Figure 6-80.

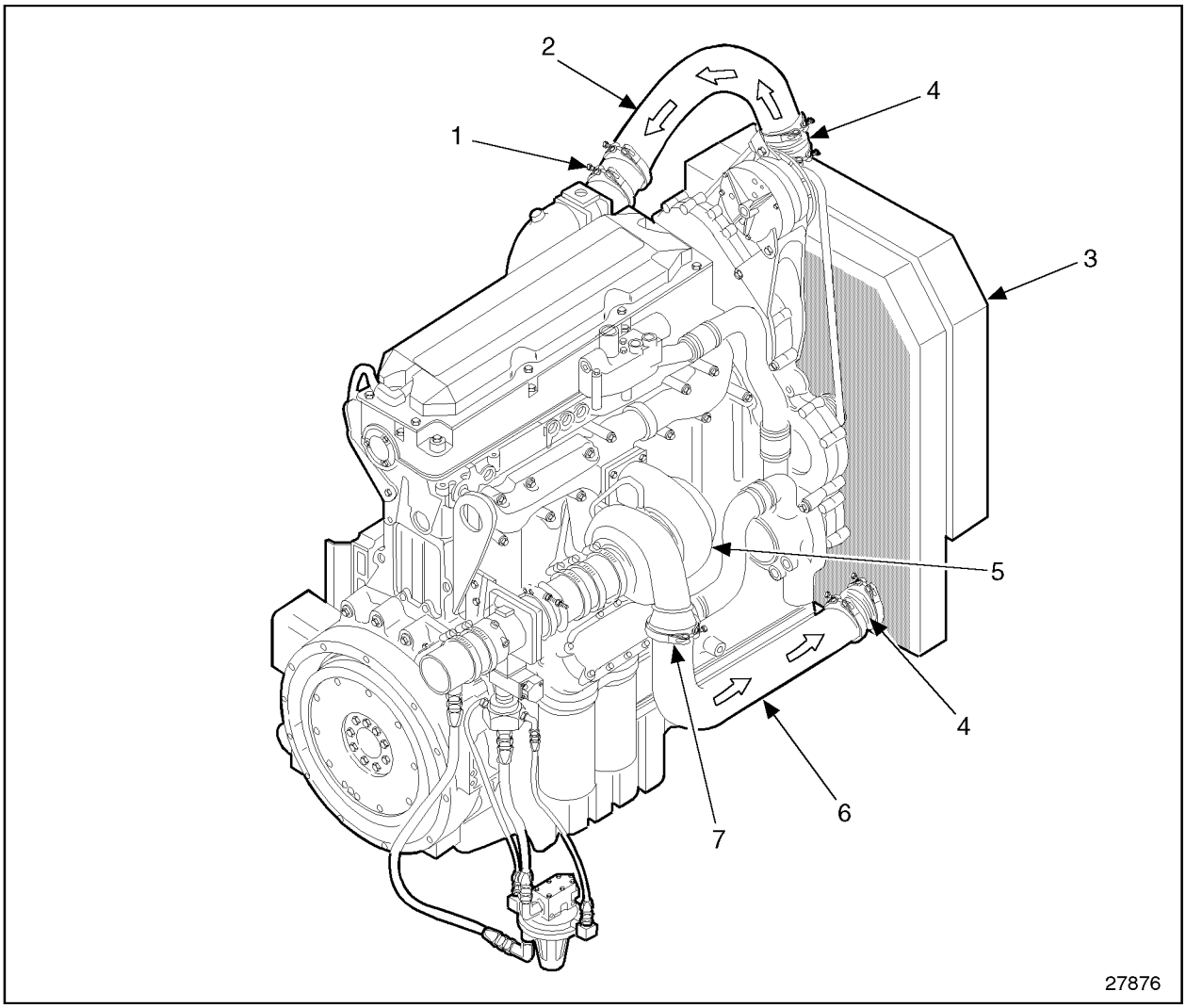

1. Coupling Hose Clamp
2. Charge Air Cooler Outlet Duct
3. Charge Air Cooler
4. Flexible Coupling
5. Turbocharger
6. Charge Air Cooler Inlet Duct
7. V-Band Clamp

Figure 6-80 Charge Air Cooler and Related Parts (Series 60G Engine) Genset

(Rev. 2004) *All information subject to change without notice.*
6SE483 0401 Copyright © 2004 DETROIT DIESEL CORPORATION

6.10.1 Repair or Replacement of Charge Air Cooler

Refer to the OEM guidelines for CAC repair and replacement procedures.

6.10.2 Removal and Cleaning of Charge Air Cooler

Refer to the OEM guidelines for CAC service procedures.

6.10.3 Inspection of Charge Air Cooler System

The CAC system must be routinely inspected for broken hoses, loose clamps and dirty/obstructed coolers. Damage to any of these components or obstructions require immediate repairs.

CAUTION:

To avoid injury while performing the test or procedure, wear adequate eye, face protection, and heat-resistant gloves.

Inspect the charge air cooler CAC system as follows:

1. Air inlet adaptor plugs should be constructed to fit into the charge air cooler plumbing between the turbocharger compressor-out location and the charge air cooler. See Figure 6-81.
2. The adaptor should be fitted with an accurate 0-414 kPa (0-60 psi) gage and air coupling see Figure 6-81.
3. The air pressure regulator should be used in line with the shop air supply to control the test pressure.
4. After the adaptor is attached to the hose at the turbocharger compressor-out location, the air inlet system should be charged to 172 kPa (25 psi) air pressure.
5. A water/soap solution should be applied (sprayed) at each hose connection across the face of the charge air cooler and at the intake manifold/head mating area. All welds on the charge air cooler and the tube header areas should be carefully checked for stress cracks.
6. If the intake manifold leaks it should be removed. Refer to section 6.4.2.
7. Both the intake manifold mating surface and the head port area should be cleaned. Refer to section 6.4.3.
8. After the intake manifold has been cleaned the mating ports should be checked for warpage. Refer to section 6.4.3.1.
9. Reinstall the intake manifold refer to section 6.4.4.

 Copyright © 2004 DETROIT DIESEL CORPORATION

6.10.4 Charge Air Cooler Pressure Check

Disconnect the charge air cooler and plug the inlet and outlet. Use an adaptor plug on the inlet see Figure 6-81. The charge air cooler is considered acceptable if it can hold 172 kPa (25 psi) pressure with less than a 34.5 kPa (5 psi) loss in 15 seconds after the hand valve is turned off.

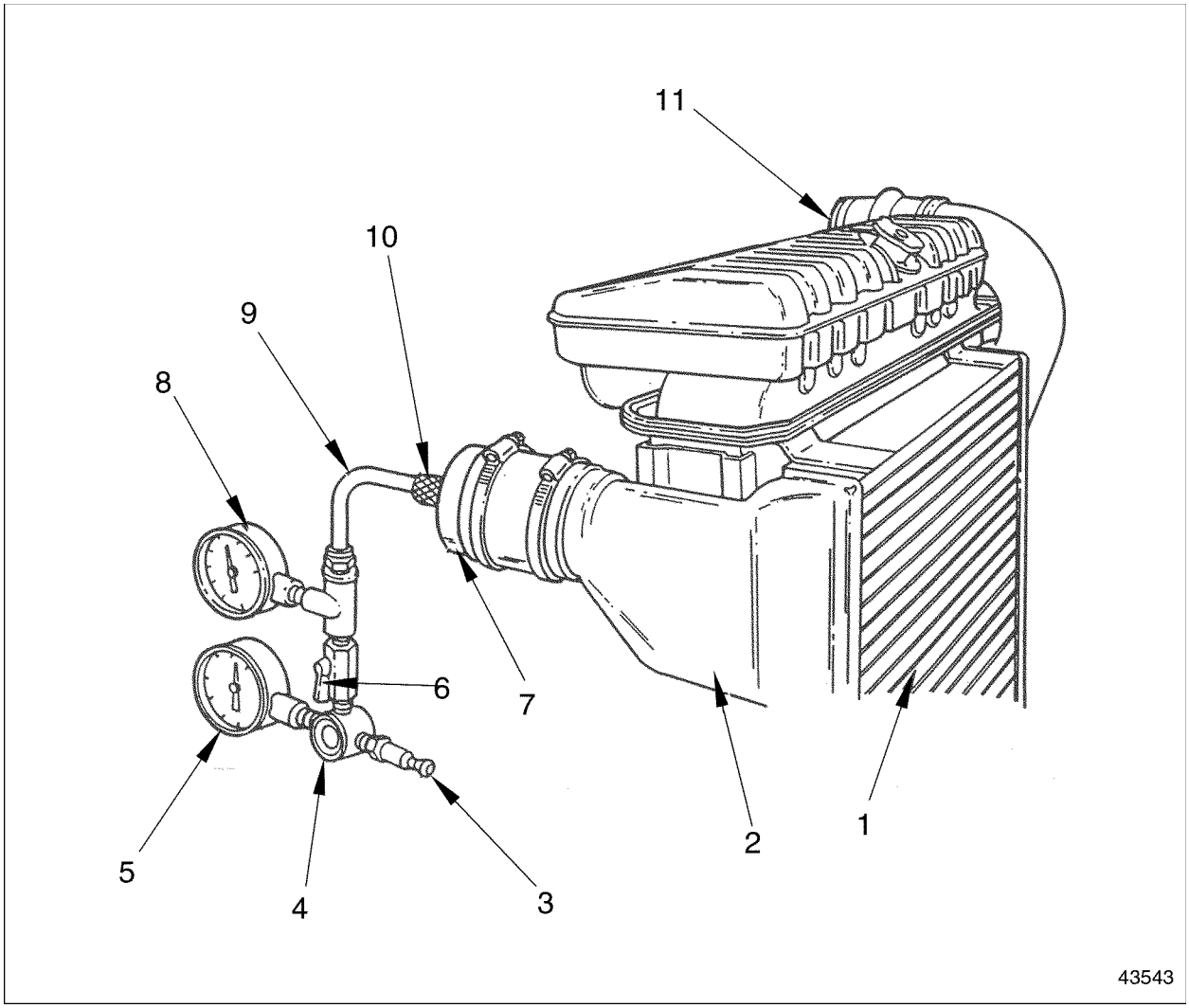

1. Charge Air Cooler
2. Charge Air Cooler Inlet
3. Shop Air Inlet
4. Pressure Regulator
5. Regulated Pressure Gauge
6. On/Off Valve
7. Plug Adaptor
8. Cylinder Pressure Gauge
9. Flexable Hose
10. Quick Disconnect
11. Adaptor Plug

Figure 6-81 Charge Air Cooler Pressure Test Kit J 41473

(Rev. 2004) *All information subject to change without notice.*
6SE483 0401 Copyright © 2004 DETROIT DIESEL CORPORATION

6.10.5 Installation of Charge Air Cooler

Refer to the OEM guidelines for CAC installation procedures.

When installation is completed, refer to section 11.8 for engine test.

 Copyright © 2004 DETROIT DIESEL CORPORATION

6.11 THROTTLE ACTUATOR FOR THE SERIES 60G ENGINE

The throttle actuator is used to control the amount of air and fuel mixture to the engine. A butterfly valve within the body is positioned by an electric actuator that is controlled by DDEC III/IV. See Figure 6-82.

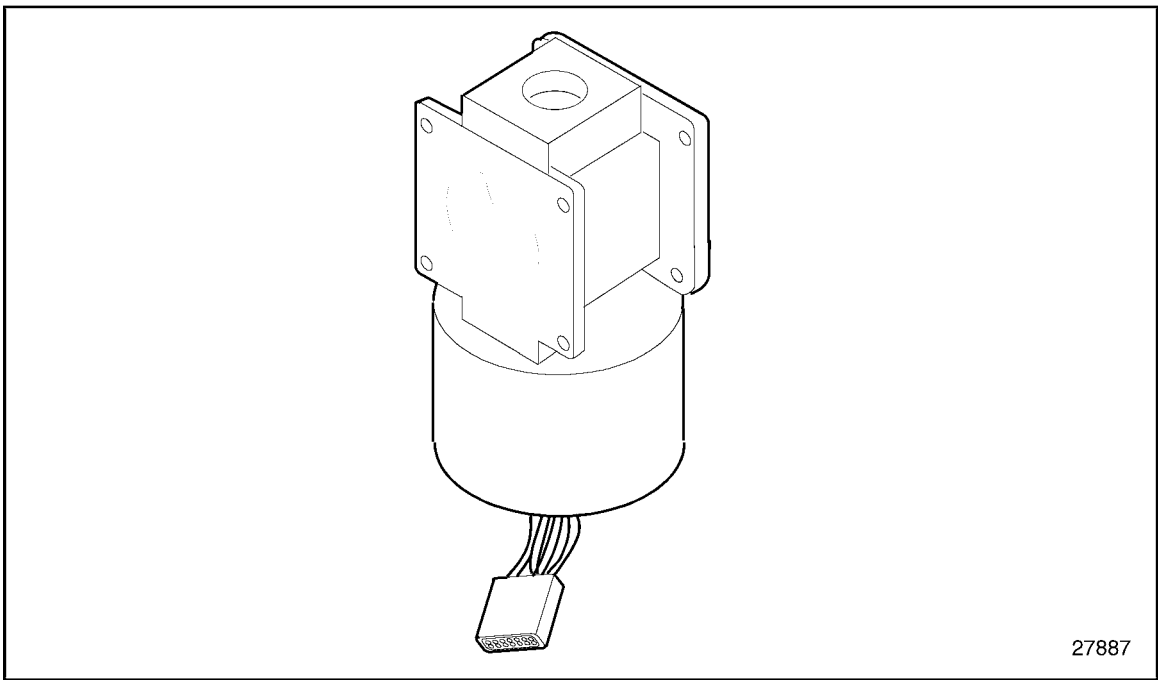

Figure 6-82 Throttle Actuator for the Series 60G Engine

(Rev. 2004) *All information subject to change without notice.*
6SE483 0401 Copyright © 2004 DETROIT DIESEL CORPORATION

Listed in Table 6-4are the throttle control diagnostic codes:

Description	Condition	PID	FMI	Information
Throttle Plate Position	HIGH Voltage	P51	3	Indicates that the Throttle Plate Position Sensor input to the ECM has exceeded 95% (normally >4.75 volts) of the sensor supply voltage. This diagnostic is typically an open sensor return circuit or sensor signal circuit is shorted to the sensor +5 volt supply.
Throttle Plate Position	LOW Voltage	P51	4	Indicates that the Throttle Plate Position Sensor input to the ECM has dropped below 5% (normally < 0.25 volts) of the sensor supply voltage. This diagnostic condition is typically detected when there is:- An open sensor signal circuit- An open sensor +5 volt supply circuit- The sensor signal is shorted to the sensor return circuit or to ground.
Throttle Plate Position	HIGH Position	P51	0	Indicates that the Throttle Plate Position Sensor input to the ECM has indicated that the throttle plate has exceeded the recommended operating range.
Throttle Plate Position	LOWPosition	P51	1	Indicates that the Throttle Plate Position Sensor input to the ECM has indicated that the throttle plate has dropped below the recommended operating range.

Table 6-4 Throttle Control Diagnostic Codes for the Series 60G Engine

 Copyright © 2004 DETROIT DIESEL CORPORATION

6.11.1 Reuse or Replacement of Throttle Actuator for the Series 60G Engine

The throttle actuator is non-serviceable and should be replaced as a unit. No adjustment is required.

6.11.2 Removal of Throttle Actuator for the Series 60G Engine

Remove the throttle actuator as follows:

1. Vent fuel system; refer to section 2.52.1and refer to section 2.52.2.
2. Disconnect and remove the six-wire power harness connectors from the throttle actuator.
3. Remove the four bolts connecting the throttle actuator to the mounting bracket.
4. Remove 8 bolts and nuts attaching the throttle to the inlet and outlet tube assemblies.

6.11.3 Disassembly of Throttle Actuator for the Series 60G Engine

Disassembly of the throttle actuator is not required.

6.11.4 Cleaning of Throttle Actuator for the Series 60G Engine

Cleaning of the throttle actuator is not required.

6.11.4.1 Inspection of Throttle Actuator for the Series 60G Engine

Inspection of the throttle actuator is not required.

6.11.4.2 Test of Throttle Actuator for the Series 60G Engine

Test of the throttle actuator is not required.

(Rev. 2004) *All information subject to change without notice.*
6SE483 0401 Copyright © 2004 DETROIT DIESEL CORPORATION

6.11.5 Installation of Throttle Actuator for the Series 60G Engine

Install the throttle actuator as follows:

1. Secure the throttle actuator to the mounting bracket with the four bolts and washers and torque to 20 N·m (15 lb·ft).
2. Connect the six-wire power harness.
3. Install a new gasket and attach the outlet tube assembly using four bolts.
4. Install a new gasket and attach the inlet tube assembly using four bolts.

 Copyright © 2004 DETROIT DIESEL CORPORATION

⚠ CAUTION:

To avoid injury from an explosion of natural gas, the following precautions must be taken:

- ☐ **Do not smoke when installing or servicing the engine or fuel system.**
- ☐ **Installation or servicing of natural-gas equipment must only be conducted in well-ventilated, natural gas compatible areas. Do not install or service equipment in an enclosed area where ignition sources are present without first ensuring that an undetected gas leak may be safely vented without being ignited.**
- ☐ **Bleed natural gas lines before installing or servicing any component connected to the fuel lines.**
- ☐ **Natural gas fuel systems are pressurized. Relieve pressure from any fuel system component prior to installation or service of that component.**
- ☐ **Use a combustible-gas detector. Liquefied natural gas (LNG) is odorless and cannot be detected by smell. Compressed Natural gas (CNG) may be odorless and may not be detected by smell.**
- ☐ **Equipment fuel systems are the responsibility of the Original Equipment Manufacturer (OEM). Equipment fuel system guidelines must be closely adhered to when installing or servicing equipment. Refer to OEM guidelines specifying which maintenance procedures require venting of fuel lines and fuel tanks.**
- ☐ **LNG systems are pressurized and contain extremely cold (-260°F [-162°C]) fluids. Contact the fuel supplier or OEM for LNG safety requirements. Contact with LNG may cause personal injury (freezing).**
- ☐ **Vent systems on the equipment should be ducted to a safe area whenever equipment is in an enclosed area.**

Natural gas is highly flammable and explosive and may be extremely cold (-260°F [-162°C]).

5. Run engine and check for air or air and fuel mixture leaks at the throttle and connecting hoses. Refer to section 2.52.3.

(Rev. 2004) *All information subject to change without notice.*
6SE483 0401 Copyright © 2004 DETROIT DIESEL CORPORATION

6.12 AIR DRYER

Refer to OEM guidelines for air dryer repair and replacement procedures.

 Copyright © 2004 DETROIT DIESEL CORPORATION

(Rev. 2004) *All information subject to change without notice.*
6SE483 0401 Copyright © 2004 DETROIT DIESEL CORPORATION

6.A ADDITIONAL INFORMATION

Description **Page**

SPECIFICATIONS 6-136
Torque Specification Exceptions - Fasteners 6-136

 Copyright © 2004 DETROIT DIESEL CORPORATION

SPECIFICATIONS

This section contains the exceptions to the fastener torque specifications.

Torque Specification Exceptions - Fasteners

The proper bolt and nut torque is dependent on its size. The proper torque for metric nuts and bolts are listed in Table 8 in the "General Information" section. Standard (nonmetric) nut and bolt torque specifications are listed in Table 7 in the "General Information" section. The exception to this rule is listed in Table 6-5.

Bolt and Size	Torque, N· m	Torque, lb · in.
M5 X 30.0 mm	2.4-3.0	21-26
Turbocharger Speed Sensor	10.1-11.2	90-100

Table 6-5 Exceptions - Metric Fastener Torque Specifications

NOTE:
The diesel turbo-boost pressure sensor retaining bolts are M5 x 30.0 mm long.

(Rev. 2004) *All information subject to change without notice.*
6SE483 0401 Copyright © 2004 DETROIT DIESEL CORPORATION

7 EXHAUST SYSTEM

Section **Page**

7.1 OVERVIEW OF EXHAUST SYSTEM 7-3

7.2 EXHAUST MANIFOLD 7-6

 Copyright © 2004 DETROIT DIESEL CORPORATION

7.1 OVERVIEW OF EXHAUST SYSTEM

The automotive and industrial engine exhaust system consists of a three-piece exhaust manifold. See Figure 7-1 for a typical configuration of the exhaust manifold and gaskets.

The outlet flange is centrally located and connects directly to the turbocharger turbine housing.

The three pieces of the exhaust manifold incorporate slip joints which slide together easily on initial assembly and seal when the manifold is heated by engine operation.

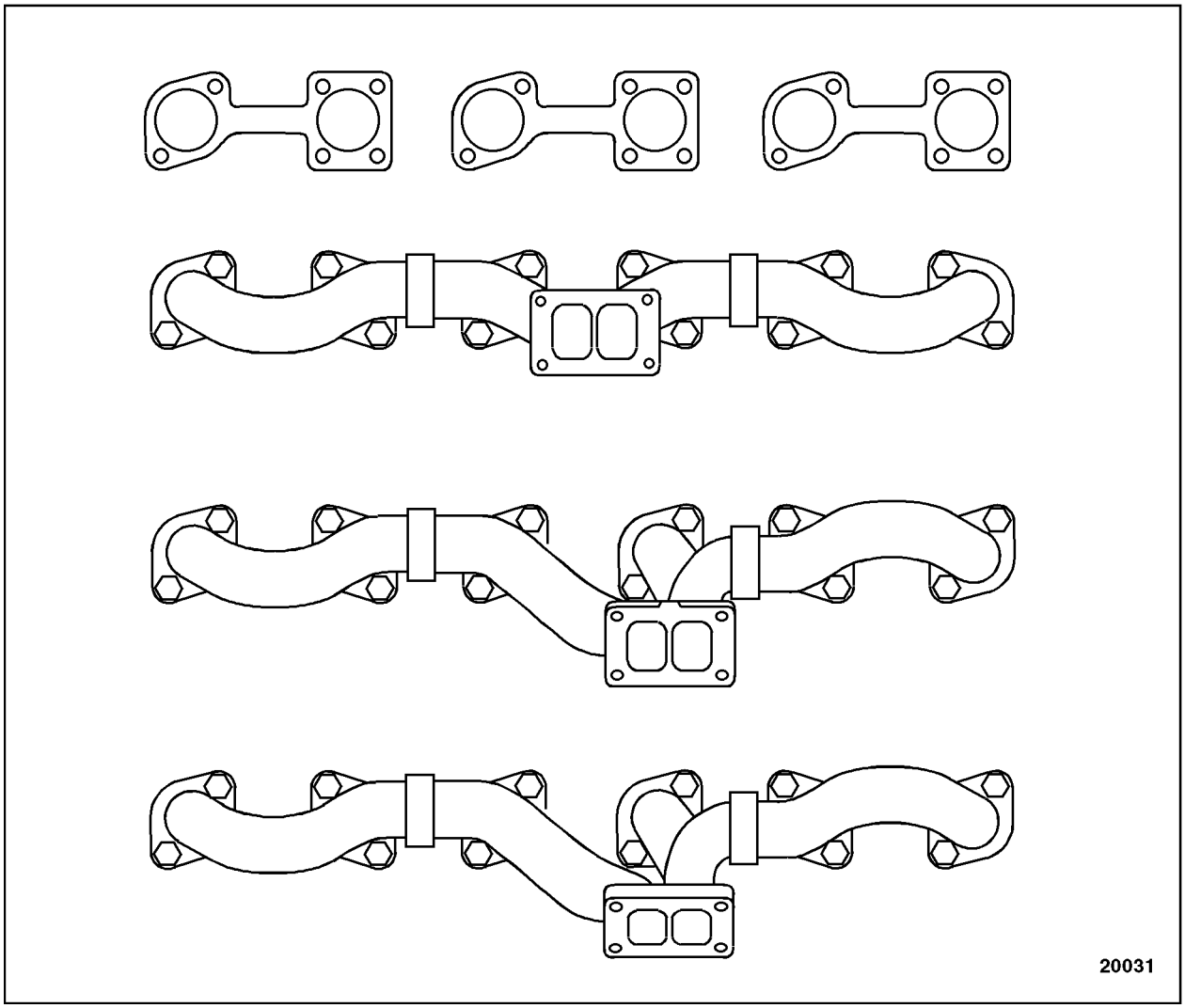

Figure 7-1 Three-Piece Exhaust Manifold and Gasket Configurations

 Copyright © 2004 DETROIT DIESEL CORPORATION

The keel-cooled marine engine exhaust system consists of a three-piece, thermal-wrapped exhaust manifold. See Figure 7-2for typical exhaust manifold and gasket configuration.

The heat exchanger-cooled marine engine exhaust system consists of a one-piece, water-cooled exhaust manifold. See Figure 7-3 for a typical exhaust manifold and gasket configuration.

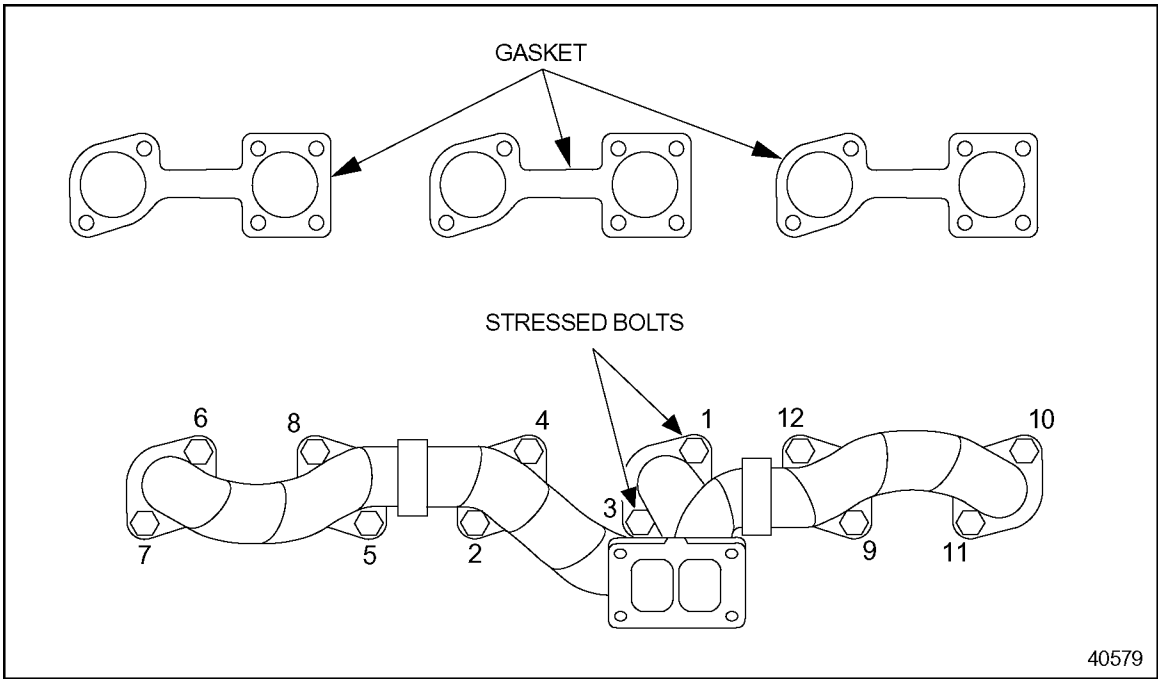

Numbers indicate torque sequence..

Figure 7-2 Typical Three-Piece Thermal-Wrapped Exhaust Manifold and Gasket Configuration

(Rev. 2004) *All information subject to change without notice.*
6SE483 0401 Copyright © 2004 DETROIT DIESEL CORPORATION

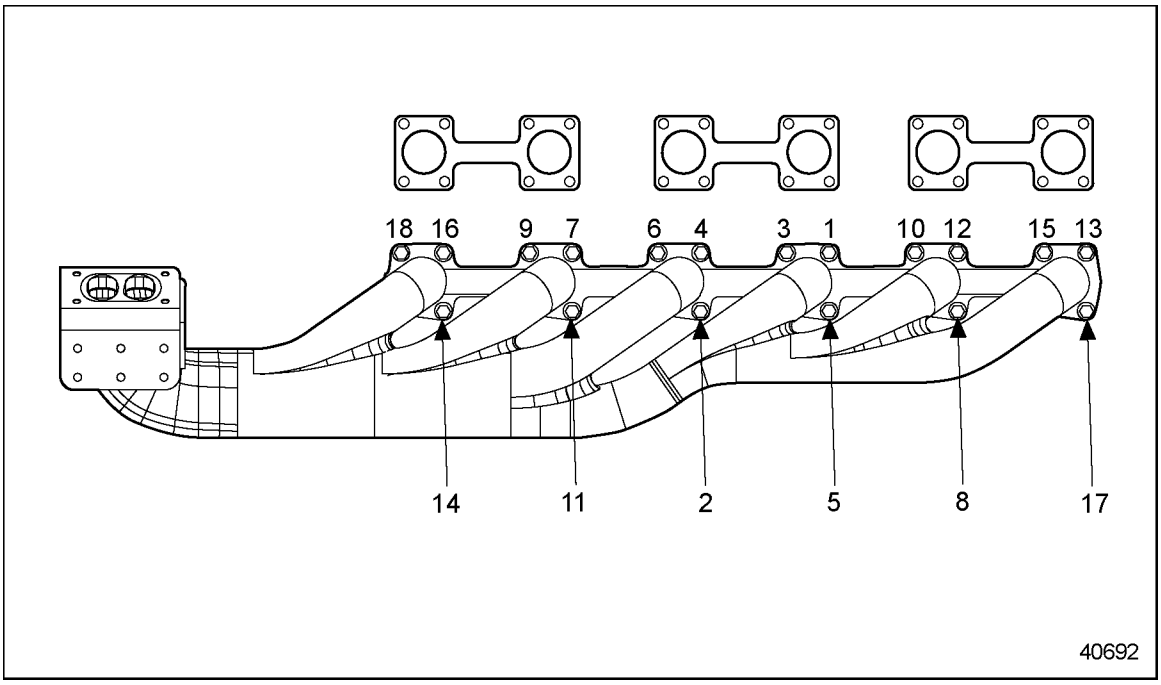

Numbers indicate bolt sequence.

Figure 7-3 Typical One-Piece Water-Cooled Exhaust Manifold and Gasket Configuration

 Copyright © 2004 DETROIT DIESEL CORPORATION

7.2 EXHAUST MANIFOLD

Three-Piece Exhaust Manifold: A three-piece, cast-iron exhaust manifold is attached to the cylinder head with twelve special alloy hardened bolts. The manifold has a square outlet flange which is bolted directly to the turbocharger turbine housing. See Figure 7-4. Three identical exhaust manifold gaskets are used between the manifold and the cylinder head. See Figure 7-1.

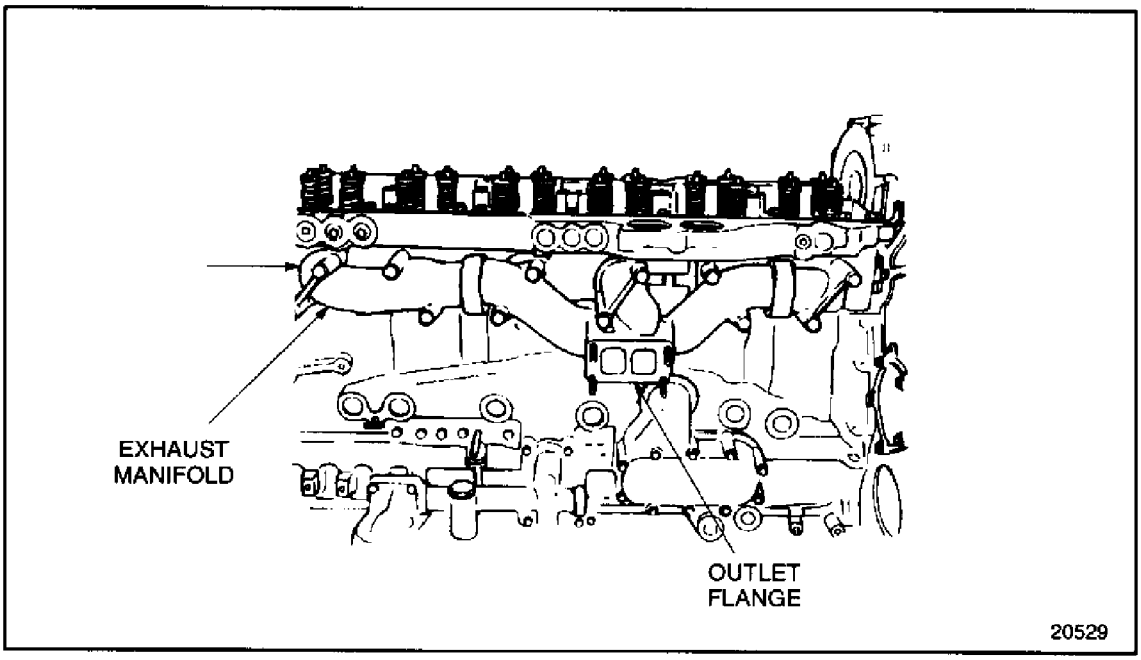

Figure 7-4 Typical Exhaust Manifold Mounting

NOTE:
Exhaust manifolds on Series 60G genset engines provide a heat shield for efficiency, see Figure 7-5.

NOTE:
Exhaust manifolds on Series 60G automotive engines and on Series 60 keeled-cooled marine engines have an insulation wrap to contain heat. One-piece exhaust manifolds on Series 60 heat exchanger-cooled marine engines are water-cooled. See Figure 7-6.

(Rev. 2004) *All information subject to change without notice.*
6SE483 0401 Copyright © 2004 DETROIT DIESEL CORPORATION

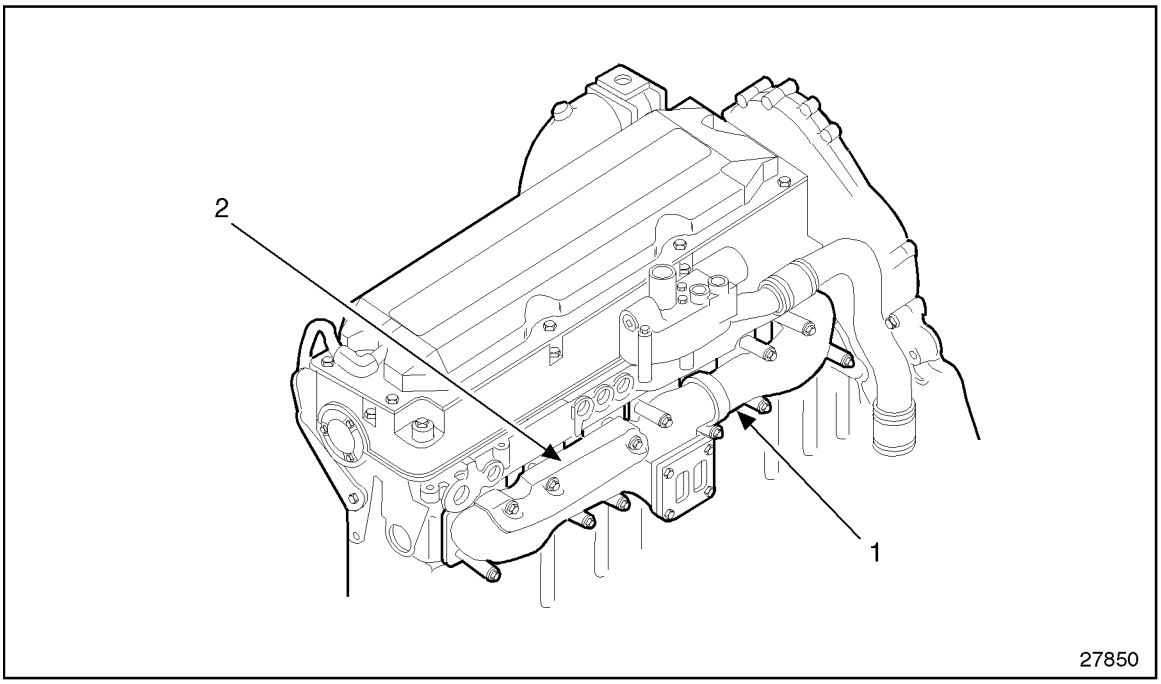

1. Exhaust Manifold
2. Heat Shield

Figure 7-5 Typical Exhaust Manifold Mounting (Series 60G Genset Engine)

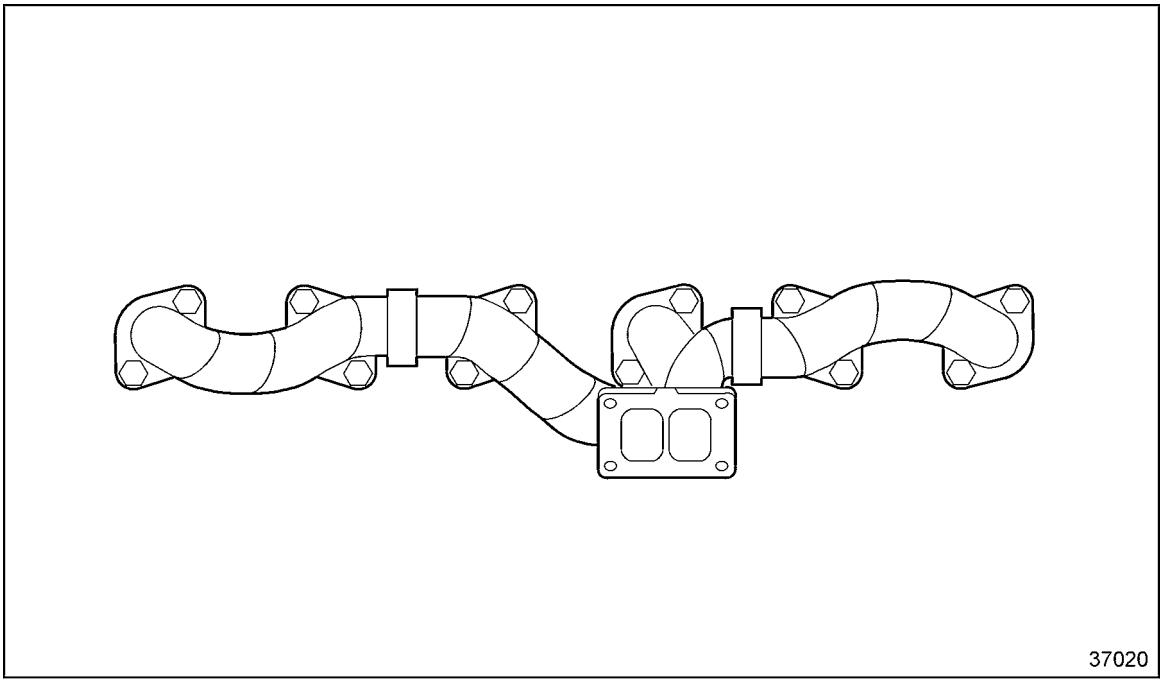

Figure 7-6 Typical Exhaust Manifold of a Pleasure Craft Marine

 Copyright © 2004 DETROIT DIESEL CORPORATION

7.2.1 Repair or Replacement of the Exhaust Manifold

To determine if repair is possible or replacement is necessary, perform the following procedure. See Figure 7-7.

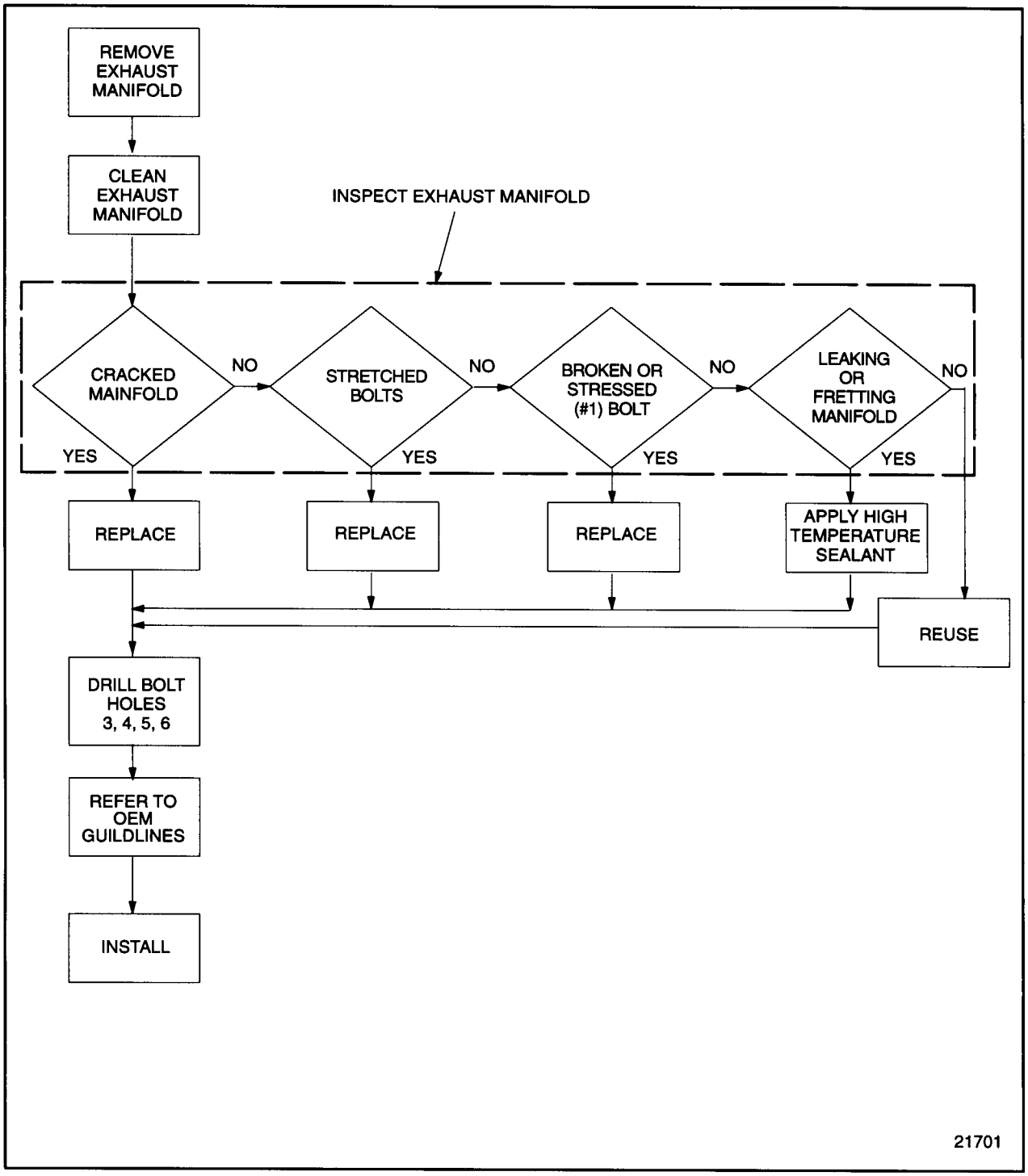

Figure 7-7 Flowchart for Repair or Replacement of Exhaust System

(Rev. 2004) *All information subject to change without notice.*
6SE483 0401 Copyright © 2004 DETROIT DIESEL CORPORATION

7.2.2 Removal and Cleaning of the Exhaust System

Remove the exhaust manifold as follows:

NOTE:
The exhaust manifold need not be clean prior to removal.

1. Remove the turbocharger assembly. Refer to section 6.6.2 (diesel) or refer to section 6.7.2 (natural gas).
2. Remove the bolts that secure the exhaust manifold to the cylinder head.
3. Remove the three-piece manifold as an assembly or remove the one-piece manifold. Discard the three gaskets.

7.2.3 Cleaning of Exhaust Manifold

Clean the exhaust manifold prior to inspection as follows:

1. Remove any loose scale and carbon that may have accumulated on the internal walls of the manifold.
2. Clean the manifold exterior with a wire brush.

7.2.3.1 Inspection of the Exhaust Manifold

Inspect the exhaust manifold as follows:

1. Visually inspect the exhaust manifold for cracks, especially in the bolt clamp areas.
   [a] If exhaust manifold is cracked, replace with a new manifold. If it is necessary to replace individual sections of the three-piece exhaust manifold, clamp the manifold in a vise equipped with soft jaws. Use a brass drift and hammer to separate the pieces. Refer to section 7.2.4.
   [b] If exhaust manifold is not damaged, reuse the component. Refer to section 7.2.4.

 Copyright © 2004 DETROIT DIESEL CORPORATION

2. Visually inspect manifold mounting bolts for damage.
   [a] If bolts are excessively stretched, or if threads are excessively damaged, replace with new bolts. Refer to section 7.2.4.
   [b] If bolts are not stretched or damaged, refer to section 7.2.4.

NOTE:
If bolt holes 3, 4, 5, and 6 are 12.6-13.7 mm (0.496 - 0.539 in.) diameter, they should be drilled out to 14.7-15.7 mm (0.577-0.618 in.) before the manifold is reinstalled on the engine. This provides an extra margin of safety for thermal expansion of the manifold. See Figure 7-8.

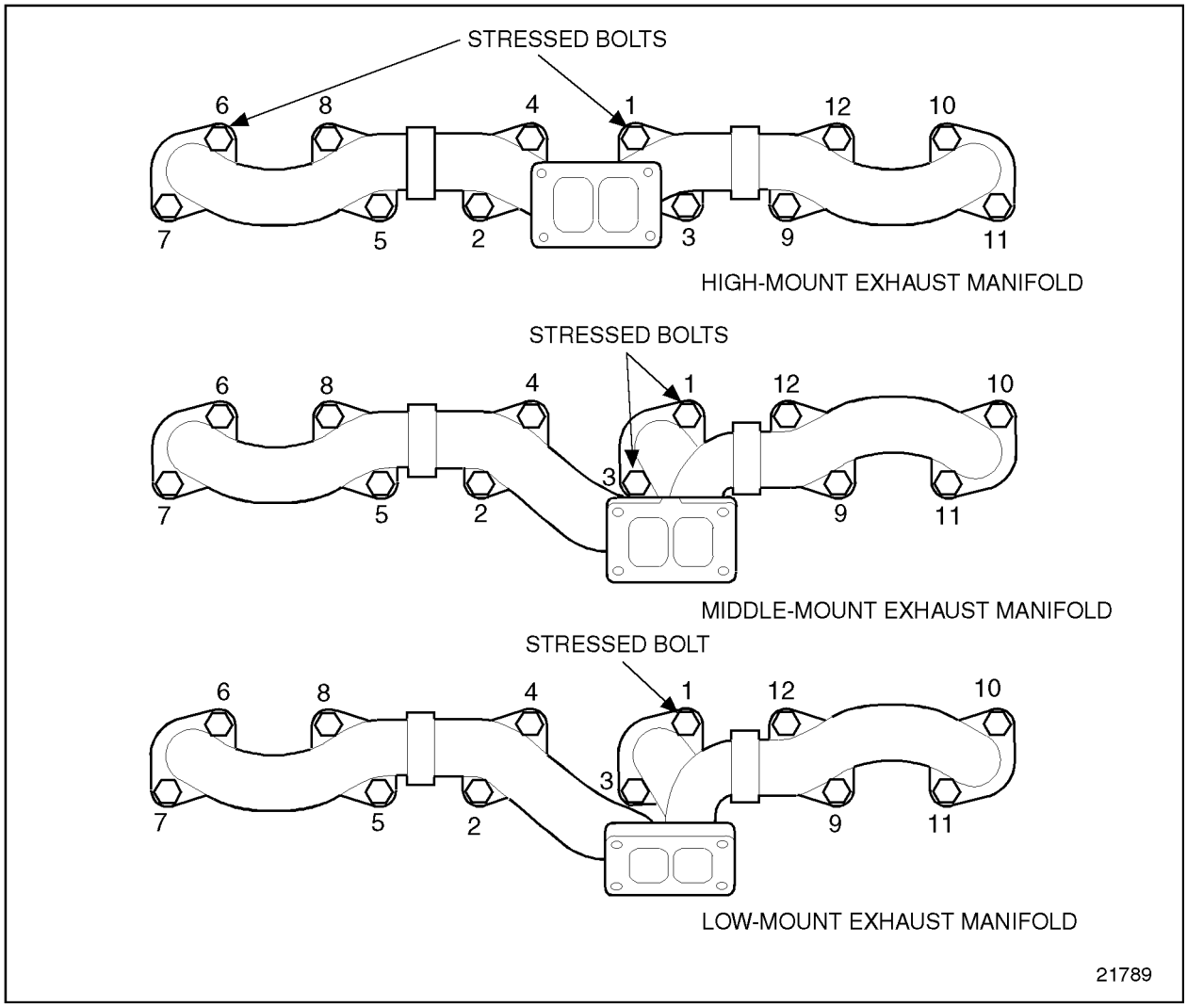

Numbers indicate bolt locations.

Figure 7-8 Exhaust Manifold Torque Sequence

(Rev. 2004) *All information subject to change without notice.*
6SE483 0401 Copyright © 2004 DETROIT DIESEL CORPORATION

3. Inspect manifold for leakage.
   [a] Check the three-piece manifold for fretting near the slip joints.
   [b] Joint leakage can be minimized by applying a high temperature, anti-seize sealant compound, DDC/Loctite® P/N 23509545 (or equivalent), to the inner and outer diameters of the joint surfaces before installation. See Figure 7-9.

   Loctite® is a registered trademark of the Loctite Corporation.

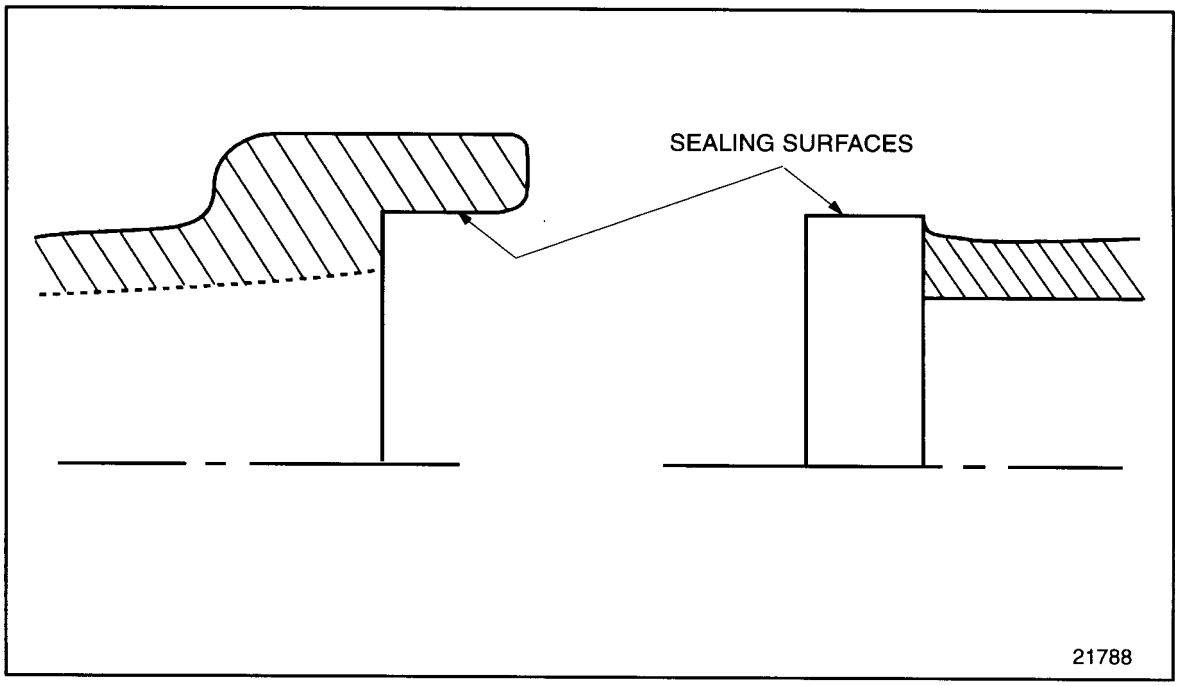

Figure 7-9 Exhaust Manifold Sealing Surfaces

4. Inspect #1 location manifold mounting bolt for damage. See Figure 7-10.
   [a] Check for broken or stressed bolt.
   [b] If bolt is excessively stretched, or if threads are excessively damaged, and complete manifold assembly replacement is required, three new exhaust manifold kits having center sections with reduced bolt hole boss at the #1 location, see Figure 7-10, are available. The new kits (23512896 - high mount, 23512897 middle mount, and 23513470 - low mount) also include bolts, studs, spacers, and special graphite-composition gaskets required for complete manifold replacement.

 Copyright © 2004 DETROIT DIESEL CORPORATION

[c] If bolt is excessively stretched, or if threads are excessively damaged, and if the exhaust manifold assembly is reusable, rework the center section reducing the height of the cast-in bolt hole boss, #1 location, on the center section, see Figure 7-10, by grinding it down to 22 mm (0.87 in.). An isolating washer will be installed in this location. Glass bead inner and outer diameters of the slip joints.

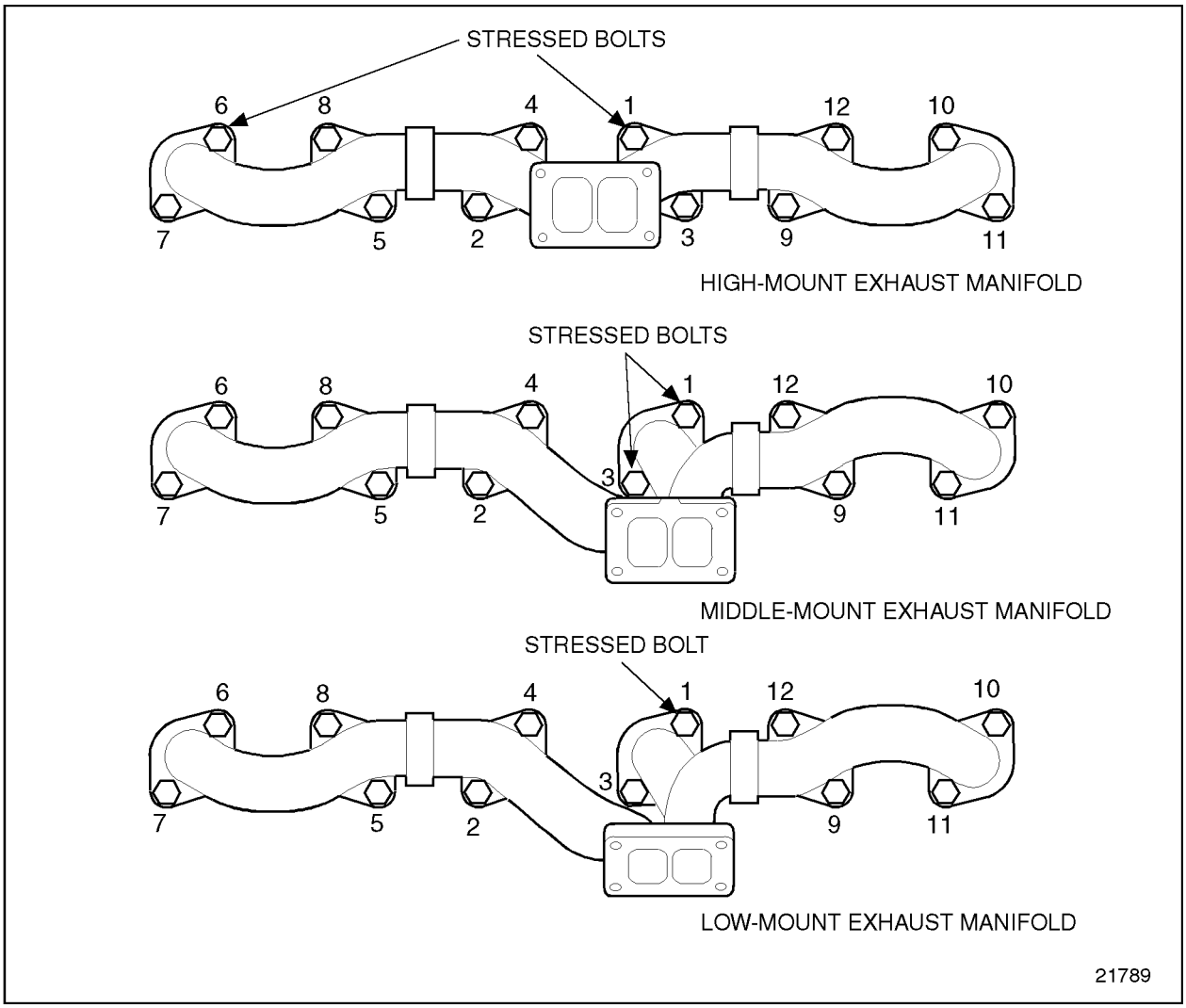

Numbers indicate bolt locations.

Figure 7-10 Exhaust Manifolds Showing Location of Stressed Bolt and Bolt Torque Sequence

(Rev. 2004) *All information subject to change without notice.*
6SE483 0401 Copyright © 2004 DETROIT DIESEL CORPORATION

5. Check one-piece, water-cooled exhaust manifold for cracks or obvious signs of coolant leakage and replace, if necessary.
6. Inspect exhaust pipe hangers for cracks. Replace as required. Refer to OEM guidelines for proper replacement procedure.
7. Inspect the flexible exhaust connection to ensure there is adequate flexibility to permit engine movement without stressing the turbocharger and exhaust manifold. Refer to OEM guidelines for proper flexibility specifications.
8. Ensure the exhaust pipe is adequately supported. Refer to OEM guidelines to verify that the exhaust pipe is adequately supported.

7.2.4 Installation of Three-Piece Exhaust Manifold

Install the exhaust manifold as follows:

1. If disassembled, reassemble the three pieces of the exhaust manifold.
2. Install four exhaust manifold guide studs, J 36107, into the cylinder head to hold the three exhaust manifold gaskets in the correct position, and facilitate manifold installation. For the modified bolt boss on the reusable center section, include one P.N. 23511667 exhaust manifold spacer under the bolts.

NOTE:
The bolt tightening pattern on cylinders 1, 2, and 3 reverses between middle-mount and high-mount exhaust manifolds. The exhaust gasket can be positioned either way. Ensure the guide studs and gaskets are positioned correctly for the manifold being installed.

3. Install the exhaust gaskets to the guide studs.
4. Install the assembled manifold to the guide studs.
5. Install eight of the bolts and spacers to the vacant holes. Finger-tighten the bolts.
6. Remove the four guide studs.
7. Install the remaining four manifold bolts and spacers to the holes from which the studs were removed.

 Copyright © 2004 DETROIT DIESEL CORPORATION

8. Torque the bolts to 58-73 N·m (43-54 lb·ft) using the tightening sequence. See Figure 7-10. For a wrapped exhaust manifold see Figure 7-11.

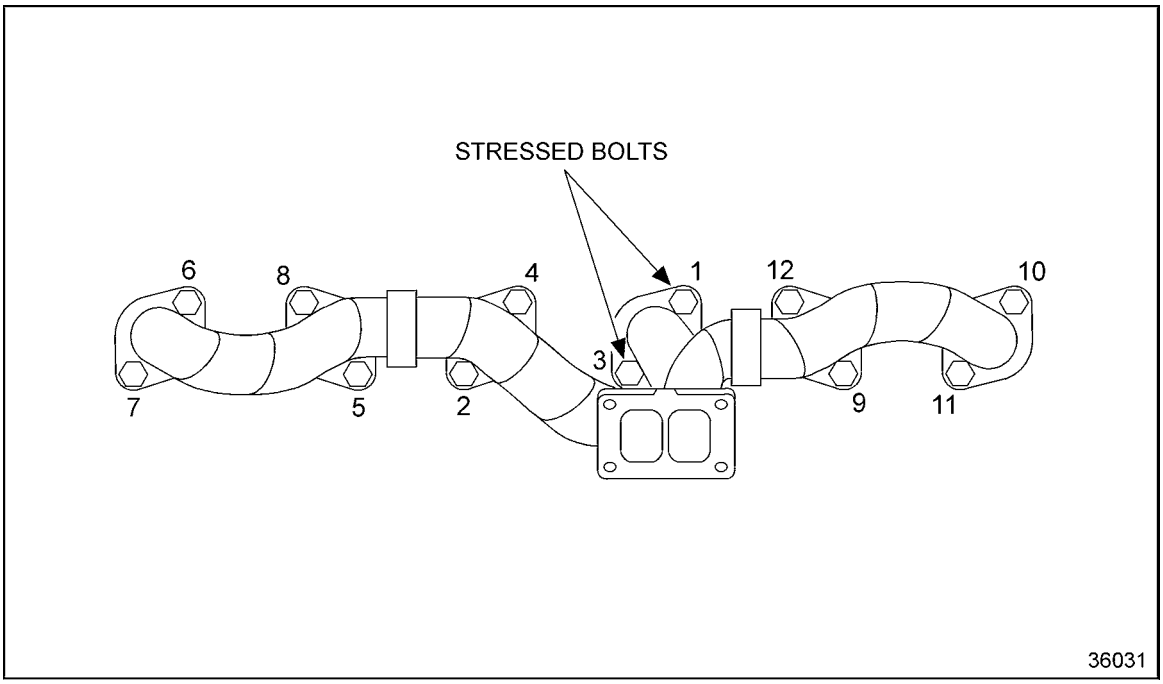

Figure 7-11 Wrapped Manifold Bolt Torque Sequence

9. Install the turbocharger assembly. Refer to section 6.6.7 (diesel) or refer to section 6.7.5 (gas).
10. Install any other equipment that was removed for this procedure.

⚠ CAUTION:

Diesel engine exhaust and some of its constituents are known to the State of California to cause cancer, birth defects, and other reproductive harm.

- ☐ **Always start and operate an engine in a well ventilated area.**
- ☐ **If operating an engine in an enclosed area, vent the exhaust to the outside.**
- ☐ **Do not modify or tamper with the exhaust system or emission control system.**

11. Start the engine and check for exhaust leaks.
12. Refer to section 11.3.6 for verification of proper exhaust manifold installation.

(Rev. 2004) *All information subject to change without notice.*
6SE483 0401 Copyright © 2004 DETROIT DIESEL CORPORATION

7.2.5 Installation of One-Piece Water-Cooled Exhaust Manifold

Install the one-piece water-cooled exhaust manifold as follows: (See Figure 7-12).

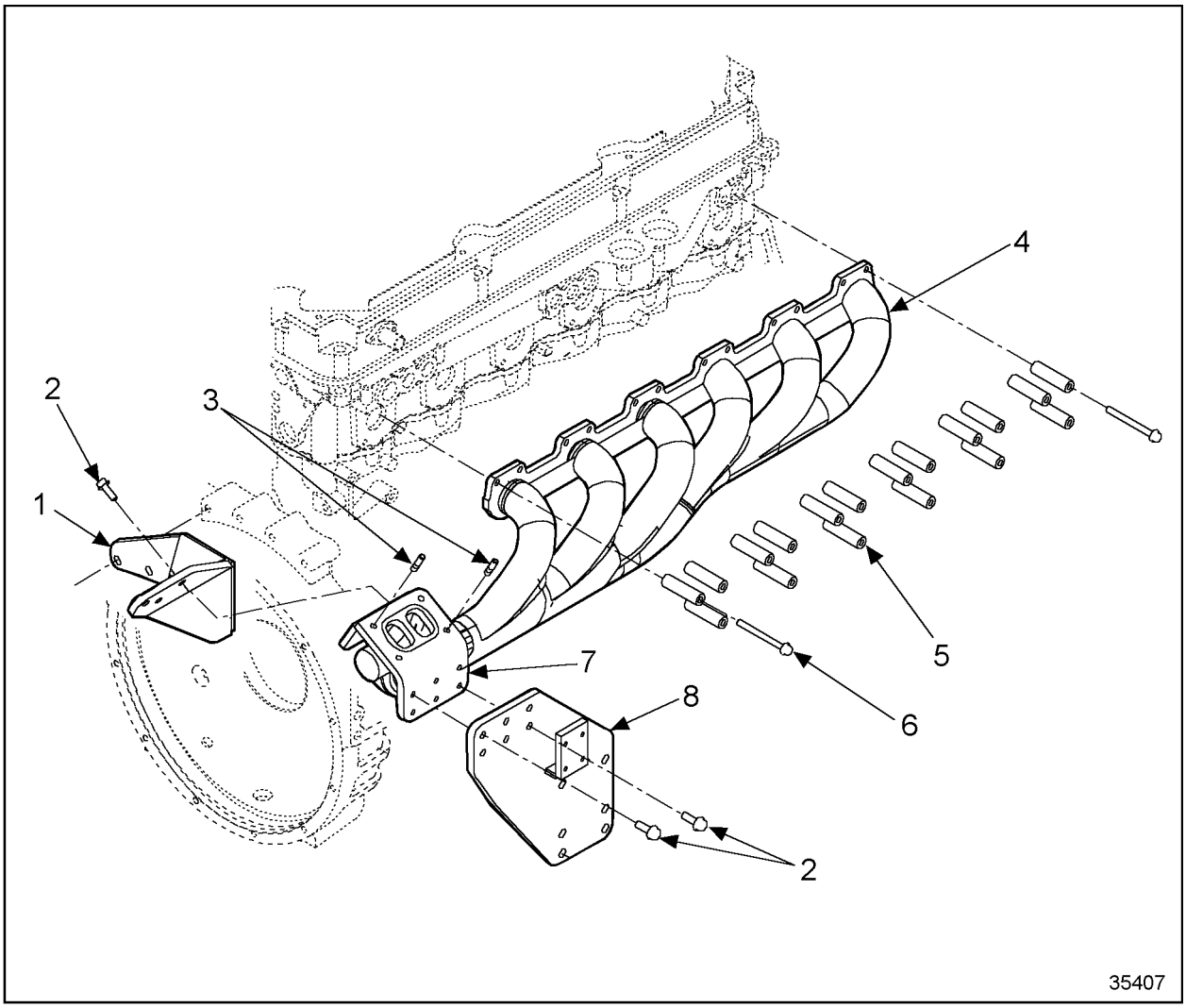

1. Bracket, Upper Manifold Support
2. Bolt
3. Stud
4. Exhaust Manifold
5. Spacer
6. Bolt
7. Turbo Mounting Flange (part of exhaust manifold)
8. Bracket, Turbo Mounting

Figure 7-12 One-Piece Water-Cooled Exhaust Manifold and Related Parts

1. Install six exhaust manifold guide studs, J 36107, into the cylinder head to hold the six exhaust manifold gaskets in the correct position and facilitate manifold installation.
2. Install the exhaust gaskets (3) to the guide studs.
3. Install the manifold to the guide studs.

 Copyright © 2004 DETROIT DIESEL CORPORATION

4. Install twelve of the bolts and spacers to the vacant holes. Finger-tighten the bolts.
5. Remove the six guide studs.
6. Install the remaining manifold bolts to the holes from which the studs were removed.
7. Torque the bolts to 58-73 N·m (43-54 lb·ft) using the tightening sequence. See Figure 7-13.

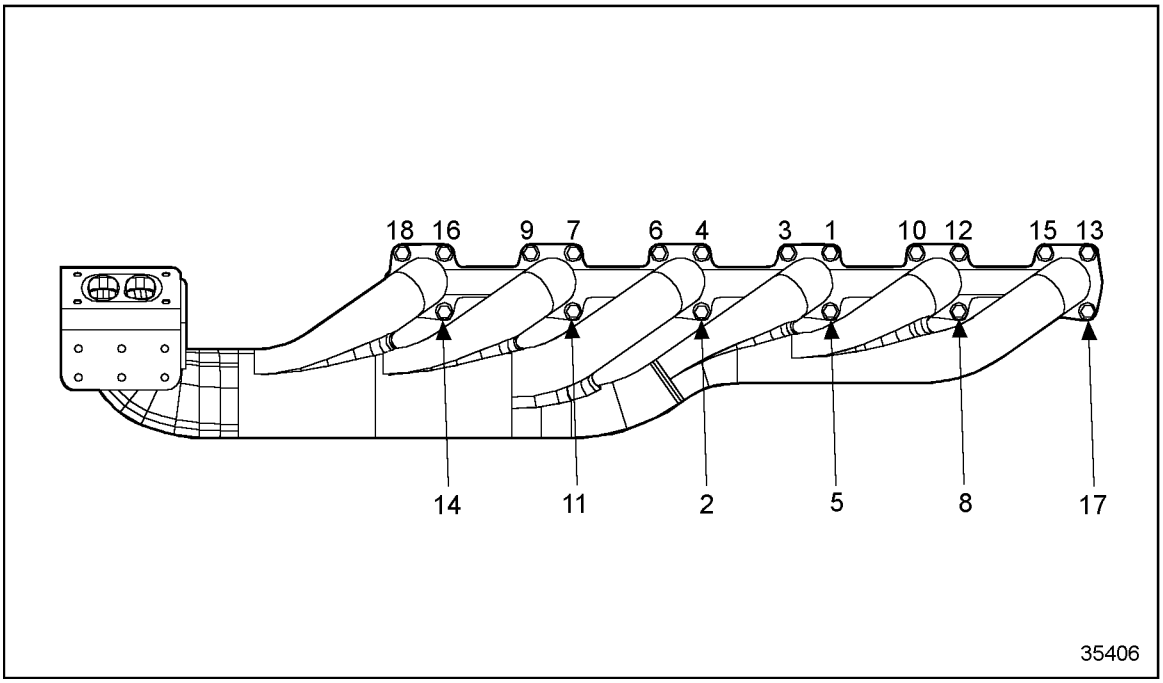

Figure 7-13 One-Piece Water-Cooled Exhaust Manifold Bolt Torque Sequence

8. Install coolant inlet and outlet elbows to the exhaust manifold and attach coolant lines.
9. Install the turbocharger assembly. Refer to section 6.6.7(diesel) or refer to section 6.7.5 (gas).
10. Install any other equipment that was removed for this procedure.
11. Refer to section 7.2.4 for the exhaust caution before preceeding. Start the engine and check for exhaust or coolant leaks.
12. Refer to section 11.3.6 for verification of proper exhaust manifold installation.

(Rev. 2004) *All information subject to change without notice.*
6SE483 0401 Copyright © 2004 DETROIT DIESEL CORPORATION

8 ELECTRICAL EQUIPMENT

Section		Page
8.1	OVERVIEW OF ELECTRICAL SYSTEM	8-3
8.2	BATTERY CHARGING ALTERNATOR	8-4
8.3	STORAGE BATTERY	8-26
8.4	CRANKING MOTOR	8-29
8.5	TACHOMETER DRIVE	8-35
8.6	DDEC III/IV ENGINE SENSOR HARNESS	8-41
8.7	DDEC II ENGINE SENSOR HARNESS	8-51
8.8	METRI-PACK 150 SERIES CONNECTORS	8-57
8.9	MICRO-PACK SERIES CONNECTORS	8-63
8.10	WEATHER PACK AND METRI-PACK 280 SERIES CONNECTORS	8-65
8.11	CONNECTOR TOOLS	8-69
8.12	SPLICING GUIDELINES	8-70
8.A	ADDITIONAL INFORMATION	8-75

 Copyright © 2004 DETROIT DIESEL CORPORATION

8.1 OVERVIEW OF ELECTRICAL SYSTEM

The electrical system consists of the following components:

- ☐ Starting motor
- ☐ Battery-charging generator (alternator)
- ☐ Transistorized voltage regulator (normally integral to the alternator)
- ☐ Storage battery(s)
- ☐ Ignition switch
- ☐ Starting motor relay

⚠ CAUTION:

To avoid injury from electrical shock, follow OEM furnished operating instructions prior to usage.

Detailed information on the maintenance and repair of the specific types of electrical equipment can be found in the service manuals and bulletins issued by the equipment manufacturer. Information regarding equipment manufactured by the Delco-Remy Division of General Motors Corporation may be obtained from their electrical equipment operation and service manuals. The manuals may be obtained from an AC-Delco service outlet, or from the Technical Literature Section, Delco-Remy Division of General Motors Corporation, Anderson, Indiana.

Information regarding equipment manufactured by the Robert Bosch Company N.A. may be obtained from their electrical equipment operation and service manuals. The manuals may be obtained from an authorized Bosch® automotive equipment service outlet.

In most instances, repairs and overhaul work on electrical equipment should be referred to an authorized repair station of the equipment manufacturer. With the exception of DDEC components, replacement parts for electrical equipment should be ordered through the equipment manufacturer's outlets, since these parts are not normally supplied with the engine. For electrical equipment manufactured by Delco-Remy Division, service and parts are available through AC-Delco branches and repair stations. For electrical equipment manufactured by Robert Bosch N.A., service and parts are available through Bosch automotive equipment service outlets.

Bosch® is a registered trademark of Robert Bosch N.A.

 Copyright © 2004 DETROIT DIESEL CORPORATION

8.2 BATTERY CHARGING ALTERNATOR

The battery charging alternator provides a source of electrical current for maintaining the storage battery in a charged condition and supplies sufficient current to carry any other electrical load requirements up to the rated capacity of the alternator.

(Rev. 2004) *All information subject to change without notice.*
6SE483 0401 Copyright © 2004 DETROIT DIESEL CORPORATION

The battery charging circuit consists of an alternator, with an integral voltage regulator, a battery(s) and the connecting wiring. See Figure 8-1 and see Figure 8-4, for parts of the battery charging alternator system.

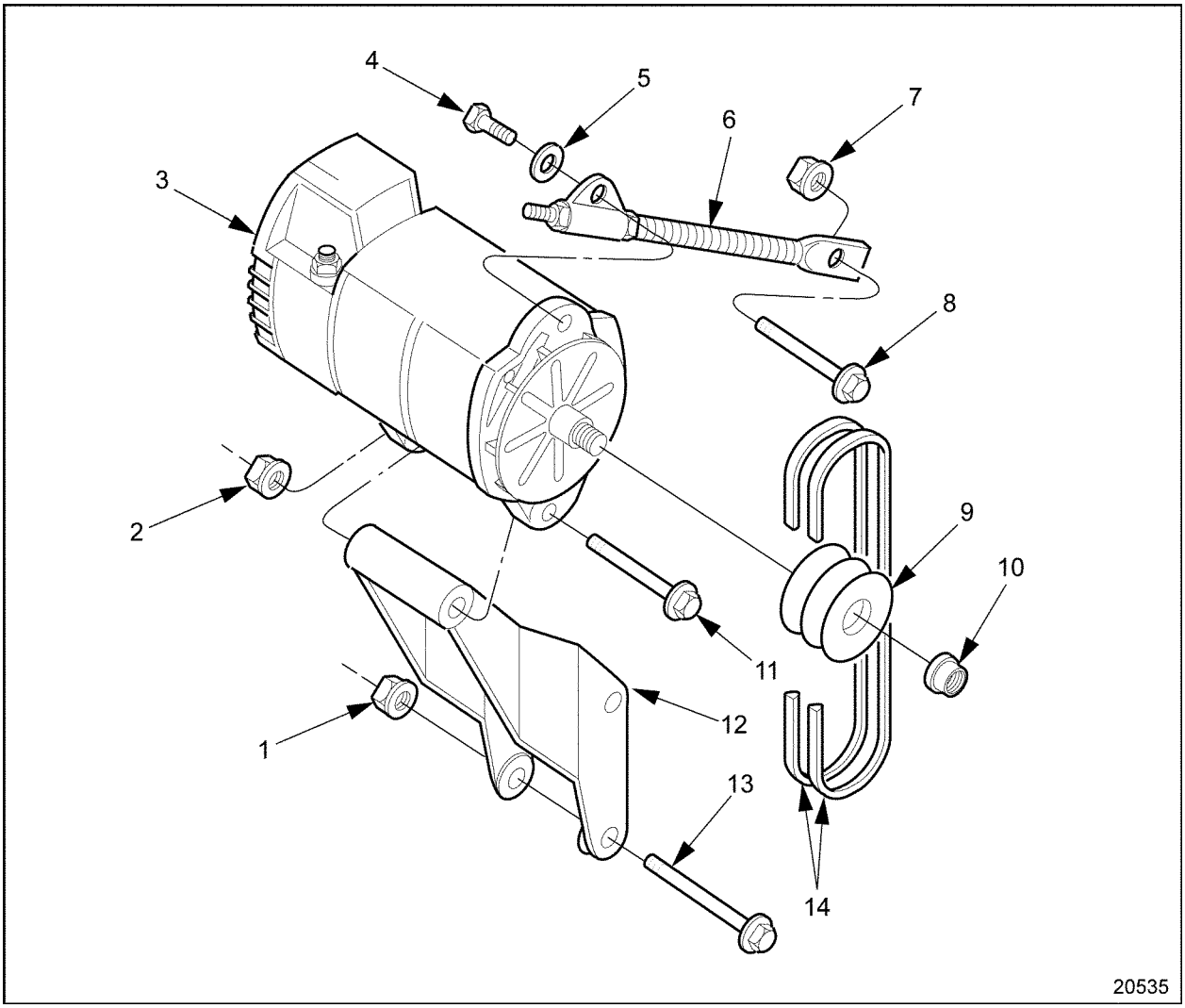

1. Nut (2)
2. Nut
3. Alternator
4. Bolt, Alternator-to-Adjusting Rod
5. Washer
6. Alternator Adjusting Rod
7. Nut
8. Bolt, Adjusting Rod-to-Engine
9. Pulley, Alternator Drive
10. Locknut
11. Bolt, Alternator-to-Mounting Bracket
12. Mounting Bracket
13. Bolt, Mounting Bracket-to-Engine (2)
14. Drive Belts

Figure 8-1 Typical Alternator and Related Parts — Trucks and Industrial

 Copyright © 2004 DETROIT DIESEL CORPORATION

Detroit Diesel has released a new alternator mounting bracket for the Series 60 2002 Engine, mounting bolt torque specifications remain standard. See Figure 8-2 and Figure 8-3.

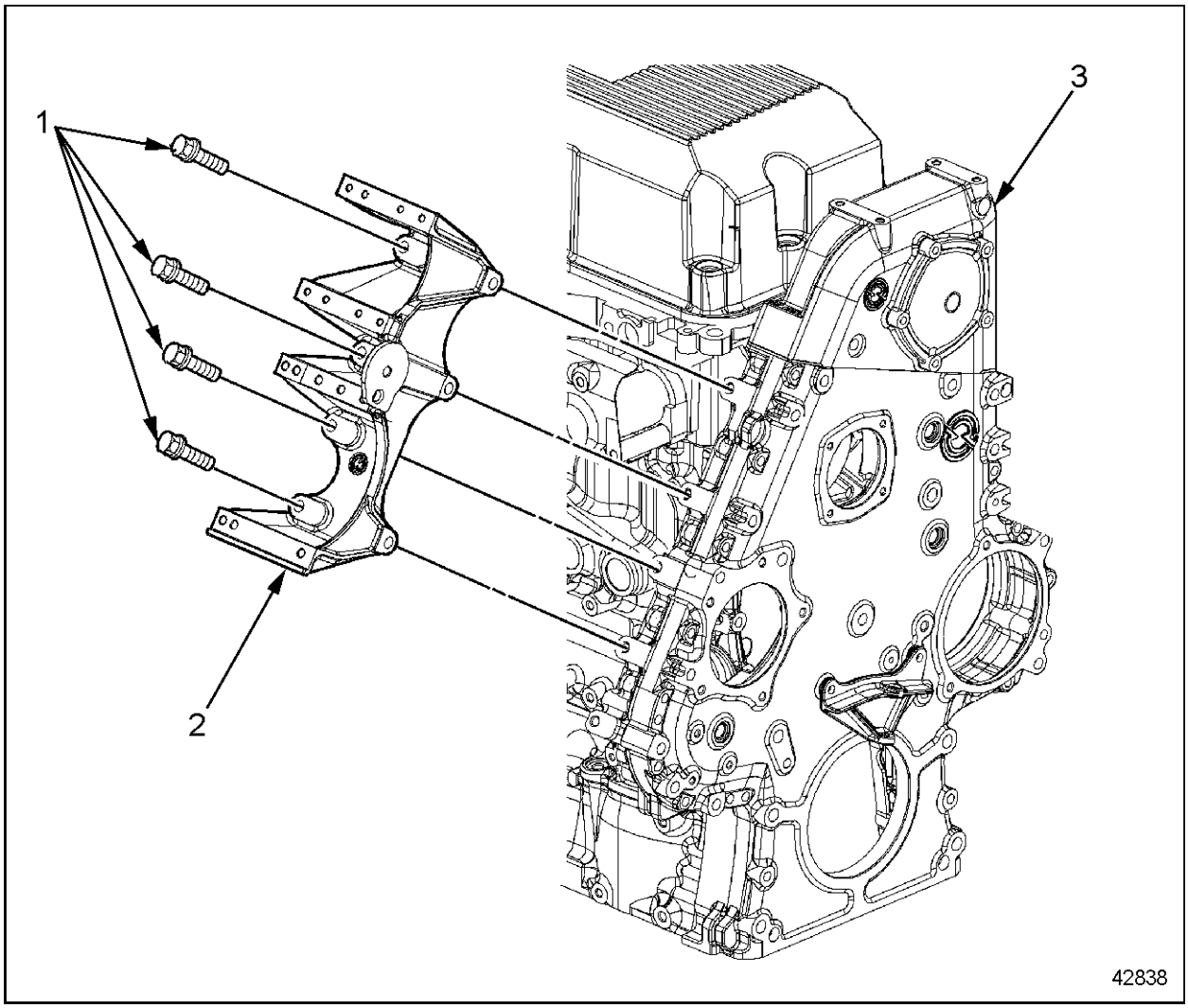

1. Bolts
2. Mounting Bracket
3. Gear Case

Figure 8-2 Alternator Mounting Bracket for Series 60 2002 Engine

(Rev. 2004) *All information subject to change without notice.*
6SE483 0401 Copyright © 2004 DETROIT DIESEL CORPORATION

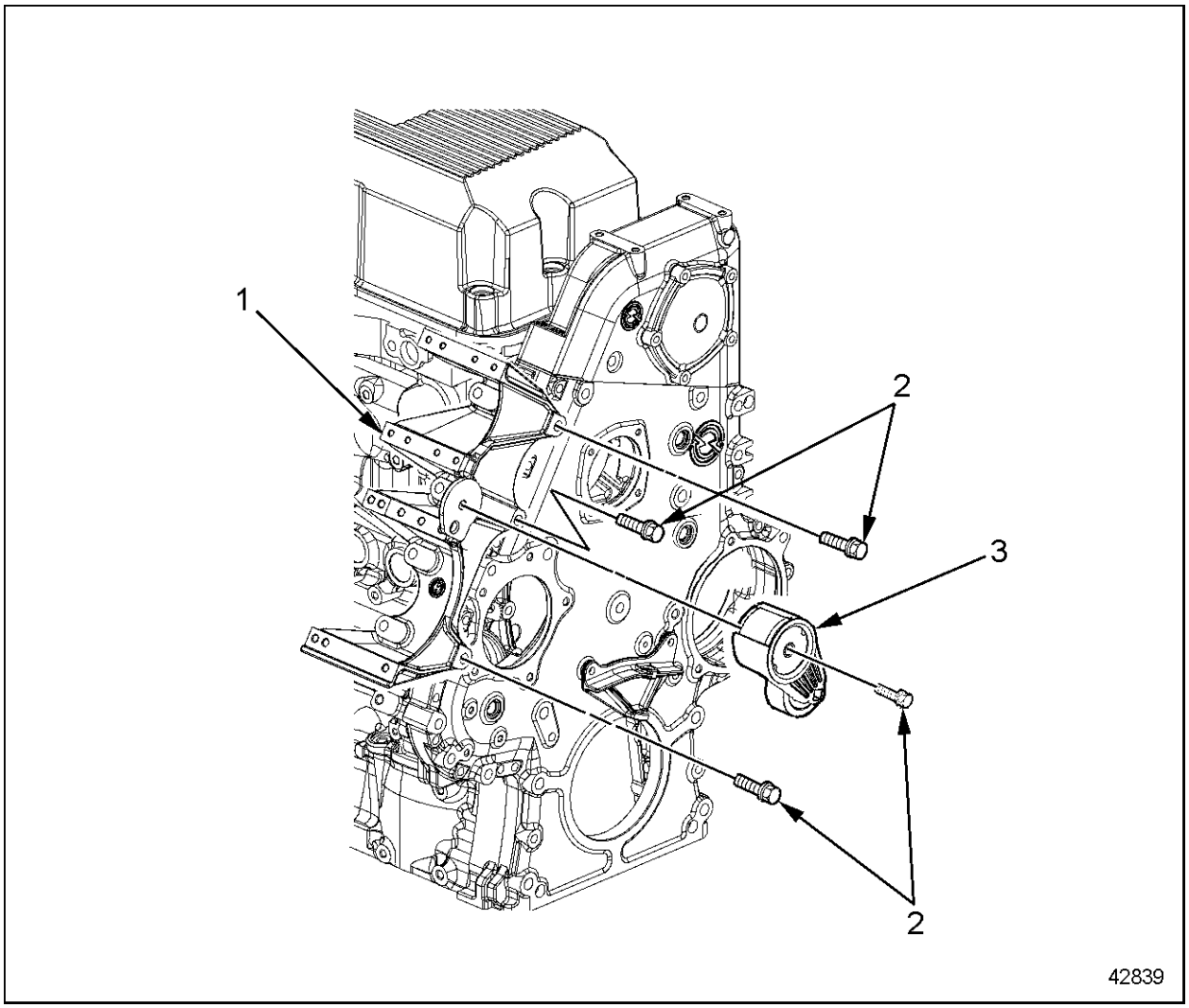

1. Alternator Bracket
2. Bolts
3. Tensioner

Figure 8-3 Tensioner and Related Parts Series 60 2002 Engine

 Copyright © 2004 DETROIT DIESEL CORPORATION

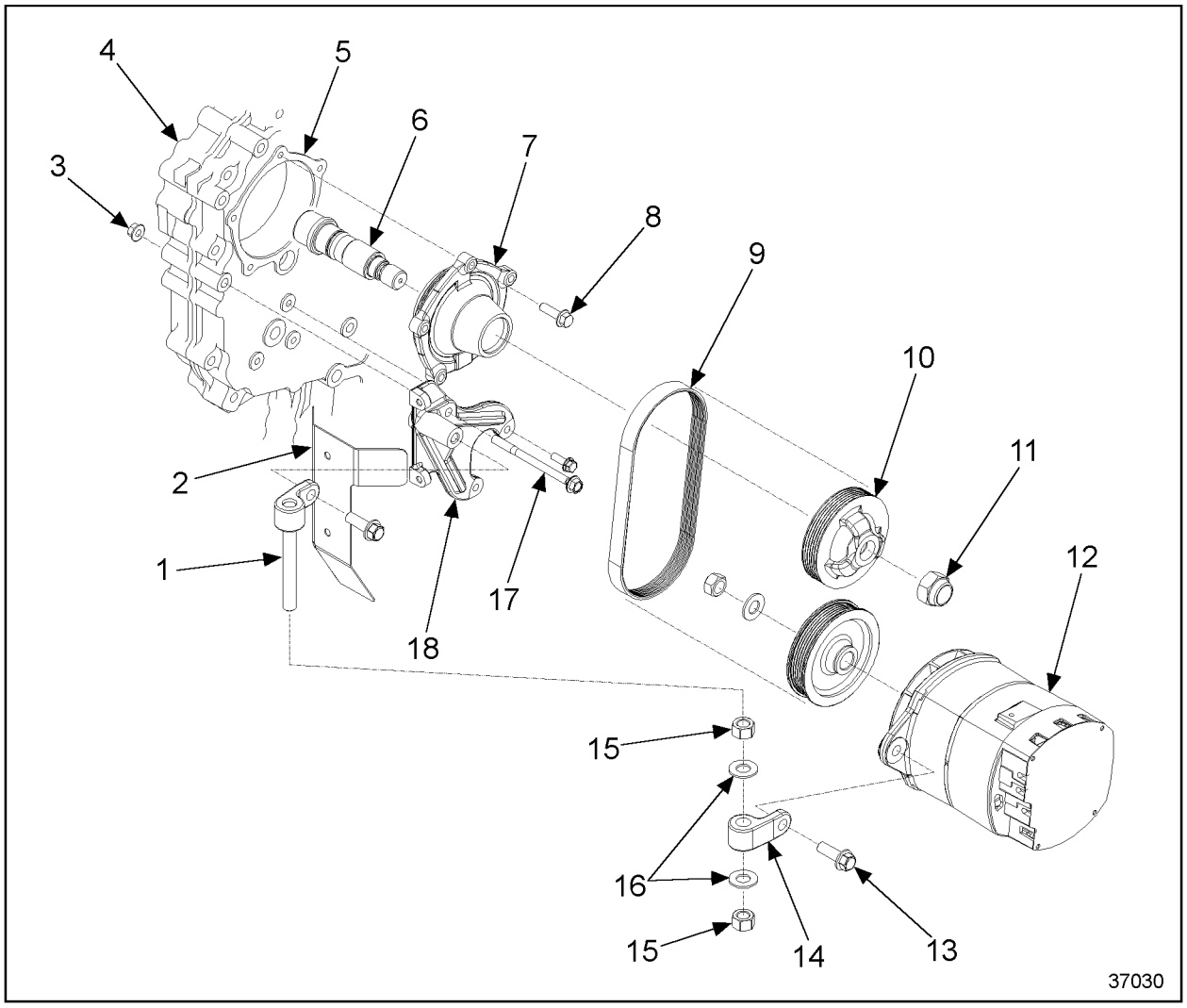

1. Belt Guard Support
2. Belt Guard
3. Nut
4. Gear Case Front Cover
5. Alternator Drive Gasket
6. Alternator Drive Shaft
7. Alternator Drive Bearing Housing
8. Alternator Drive Mounting Bolt
9. Drive Belt
10. Alternator Drive Pulley
11. Alternator Drive Pulley Nut
12. Alternator
13. Belt Guard Support Bracket Bolt
14. Belt Guard Support Bracket
15. Belt Guard Support Nut
16. Belt Guard SupportWasher
17. Alternator Support Bolt
18. Alternator Support

Figure 8-4 Typical Alternator and Related Parts — Heat Exchanger-Cooled Pleasure Craft Marine

(Rev. 2004) *All information subject to change without notice.*
6SE483 0401 Copyright © 2004 DETROIT DIESEL CORPORATION

The hinge mounted 25 - SI and 33 – SI alternators and the bracket mounted 50 DN alternator are alternating current (AC), self-rectifying units. See Figure 8-5.

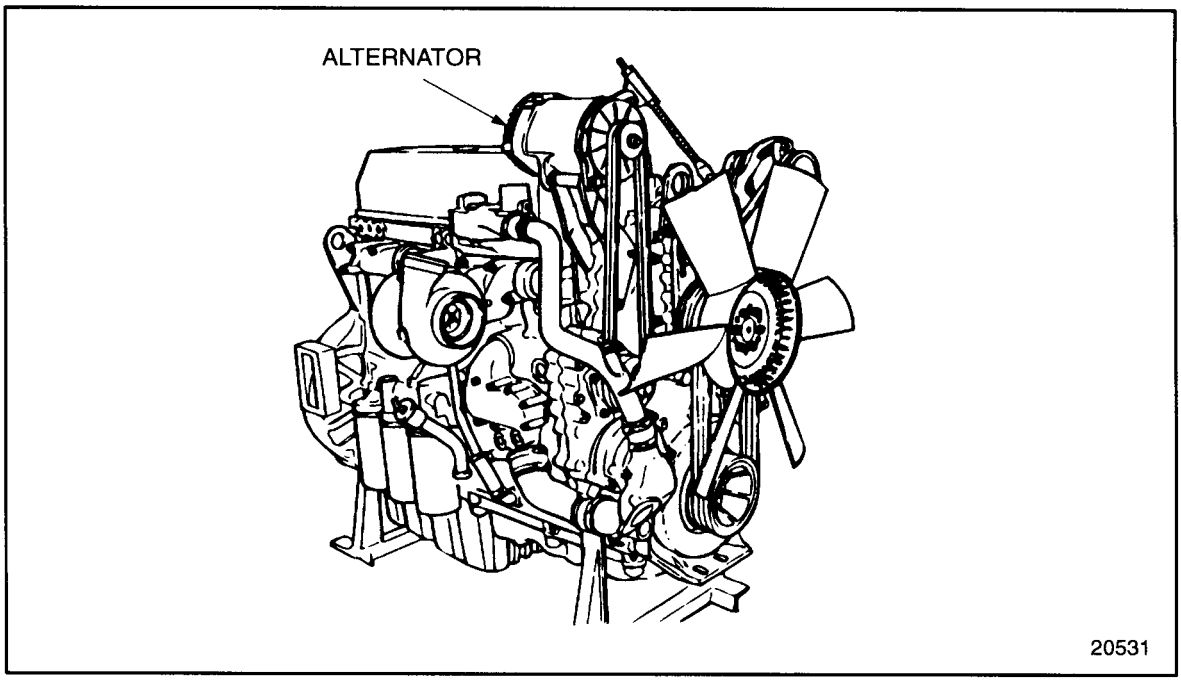

Figure 8-5 Alternator Mounting

On engines equipped with the SI series Delco-Remy alternators, the voltage regulator is typically electronic and is located inside the alternator. Refer to the appropriate manufacturer's service instructions for complete regulator and alternator servicing information.

The alternator is front mounted and belt driven using the accessory drive pulley. The accessory drive pulley is gear driven by the bull gear. Refer to section 1.29 for accessory drive information.

In 1995, the former 50 DN alternator drive system replaced the early 50 DN alternator drive system previously used on coach engines. The changes to the drive system took effect with the engine serial numbers listed in Table 8-1.

Change	Engine Serial Number	Build Date
Alternator Pulley	6R-274215	Nov. 27, 1995
Accessory Drive Asm.	6R-276579	Dec. 16, 1995
Tensioner/Support Plate/Adjusting Bolt	6R-277807	Dec. 20, 1996

Table 8-1 Effectivity of Improved 50 DN Alternator Drive System Changes

 Copyright © 2004 DETROIT DIESEL CORPORATION

The former 50 DN alternator drive system included a new tensioner assembly, support plate, tensioner adjusting bolt, alternator assembly and accessory drive assembly. The top pulley of the tensioner assembly is the same size as the bottom pulley (127 mm), and all pulleys in the system had front and back flanges to insure proper belt positioning during installation and improved belt tracking during engine operation.

The early and former tensioner assembly, support plate, and tensioner adjusting bolt are not separately interchangeable on a part-for-part basis and should not be used on an engine.

To simplify installation of the DN alternator drive belt and ensure proper running tension throughout drive belt life, an auto belt tensioner assembly replaced the former tensioner/support plate assembly on December 15, 1997, effective with engine serial number 6R392714. See Figure 8-6. Use of the auto tensioner eliminates the need for periodic belt tension inspection. Only the auto belt tensioner assembly is used on engines with 50 DN alternators.

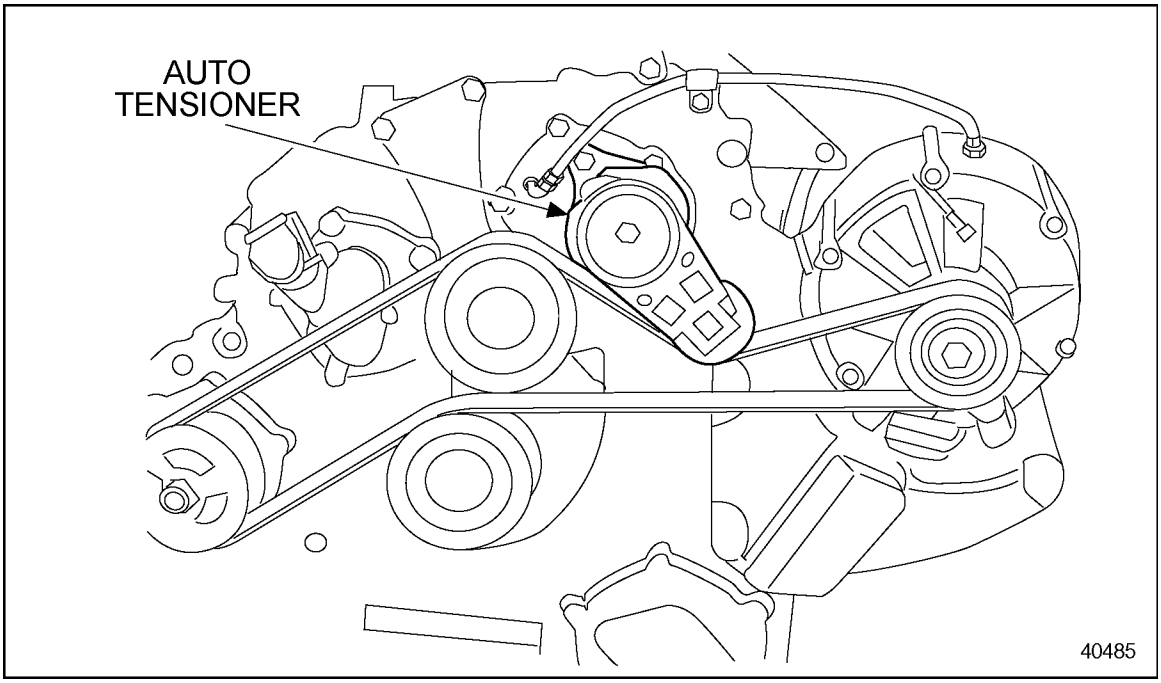

Figure 8-6 Auto Belt Tensioner Assembly with 50 DN Alternator

Effective June 2000, the No. 4 size vent hose on the 50DN alternator was replaced by a No. 6 braided hose to improve venting of the alternator and extend alternator life. In addition, the vent line connection point on the engine was moved from a tapped hole in the gear case to a tapped hole in the auto belt tensioner mounting plate.

(Rev. 2004) *All information subject to change without notice.*
6SE483 0401 Copyright © 2004 DETROIT DIESEL CORPORATION

8.2.1 Repair of Alternator

Refer to the OEM guidelines for alternator repair procedures.

8.2.2 Removal of Alternator

Precleaning is not necessary.

Remove the alternator as follows:

CAUTION:

To avoid injury from electrical shock, follow OEM furnished operating instructions prior to usage.

1. Disconnect the cables at the batteries. Tag each lead to ensure correct connection when the alternator is reinstalled.
2. If the alternator has more than the output cable lead, disconnect all other leads from the alternator, and tag each one to ensure correct installation.
3. Remove the alternator output cable.
4. Remove the drive belts. See Figure 8-1.
5. If an auto belt tensioner assembly is installed, use a breaker bar with a 3/4 inch drive to rotate the tensioner pulley upward to relieve belt tension.

CAUTION:

To avoid injury to hands and fingers from the spring-loaded auto belt tensioner violently snapping back, do not cut the belt to remove it.

6. If an auto belt tensioner assembly is not installed, loosen the alternator mounting bolts and adjusting rod nut to allow slack in the drive belts.
7. If an oil-cooled alternator is installed, disconnect the oil supply, return, and vent lines. Plug the ends of the oil lines and the oil inlet and outlet on the alternator to prevent the entrance of dirt.See Figure 8-7 for former or see Figure 8-8 for current.
8. If required remove bolt or bolts from auto belt tensioner and remove tensioner.

 Copyright © 2004 DETROIT DIESEL CORPORATION

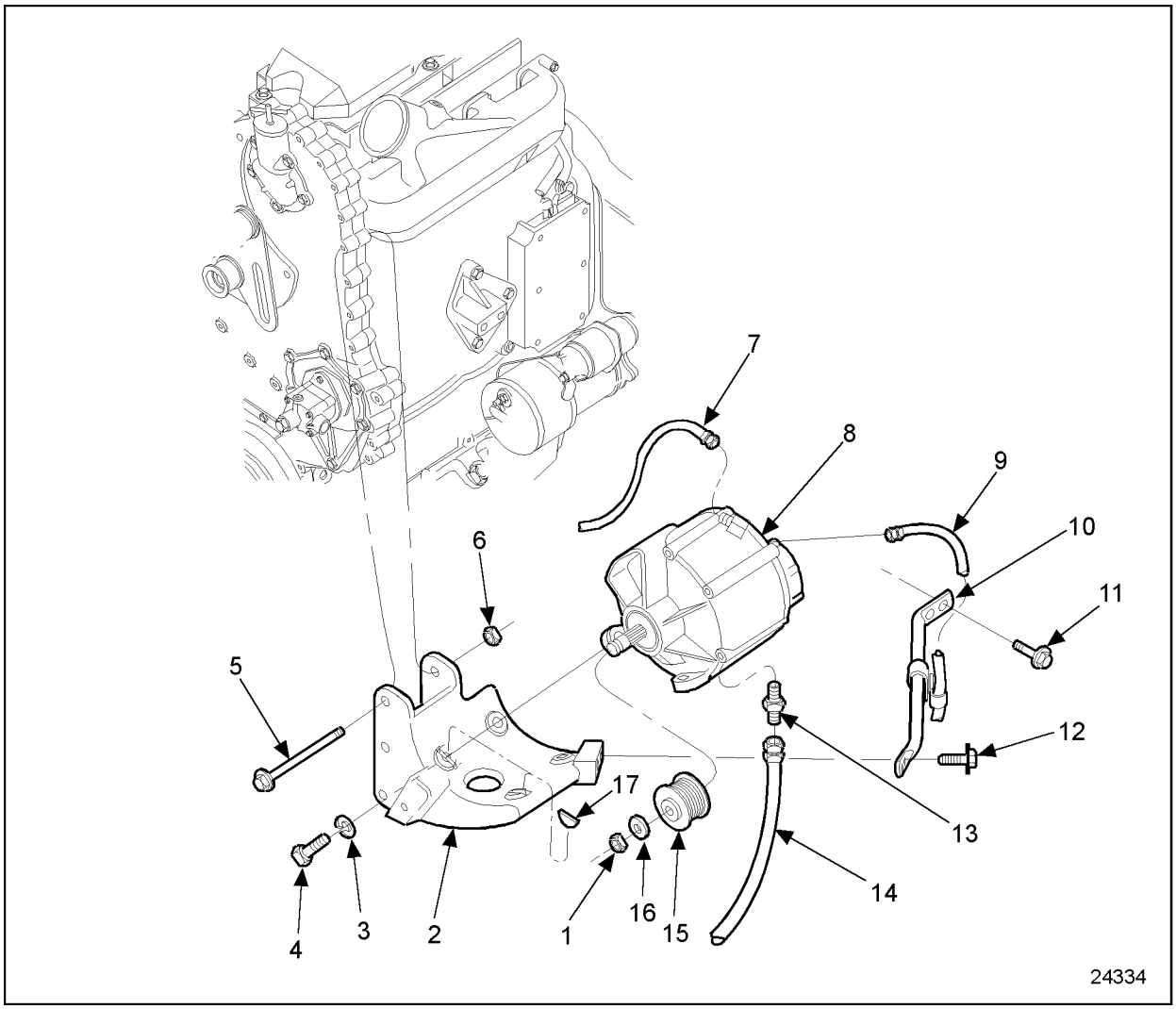

1. Pulley Nut
2. Alternator Mounting Bracket
3. Washer (4)
4. Bolt, Bracket to Alternator (4)
5. Bolt, Bracket to Front Cover (3)
6. Nut (3)
7. Alternator Vent Hose
8. Alternator
9. Oil Supply Tube
10. Alternator Bracket Support
11. Bolt, Support to Block (2)
12. Bolt, Bracket Support (2)
13. Oil Drain Tube Connector
14. Oil Drain Tube
15. Alternator Pulley
16. Washer
17. Woodruff Key (2)

Figure 8-7 Former Coach Alternator and Related Parts

(Rev. 2004) *All information subject to change without notice.*
6SE483 0401 Copyright © 2004 DETROIT DIESEL CORPORATION

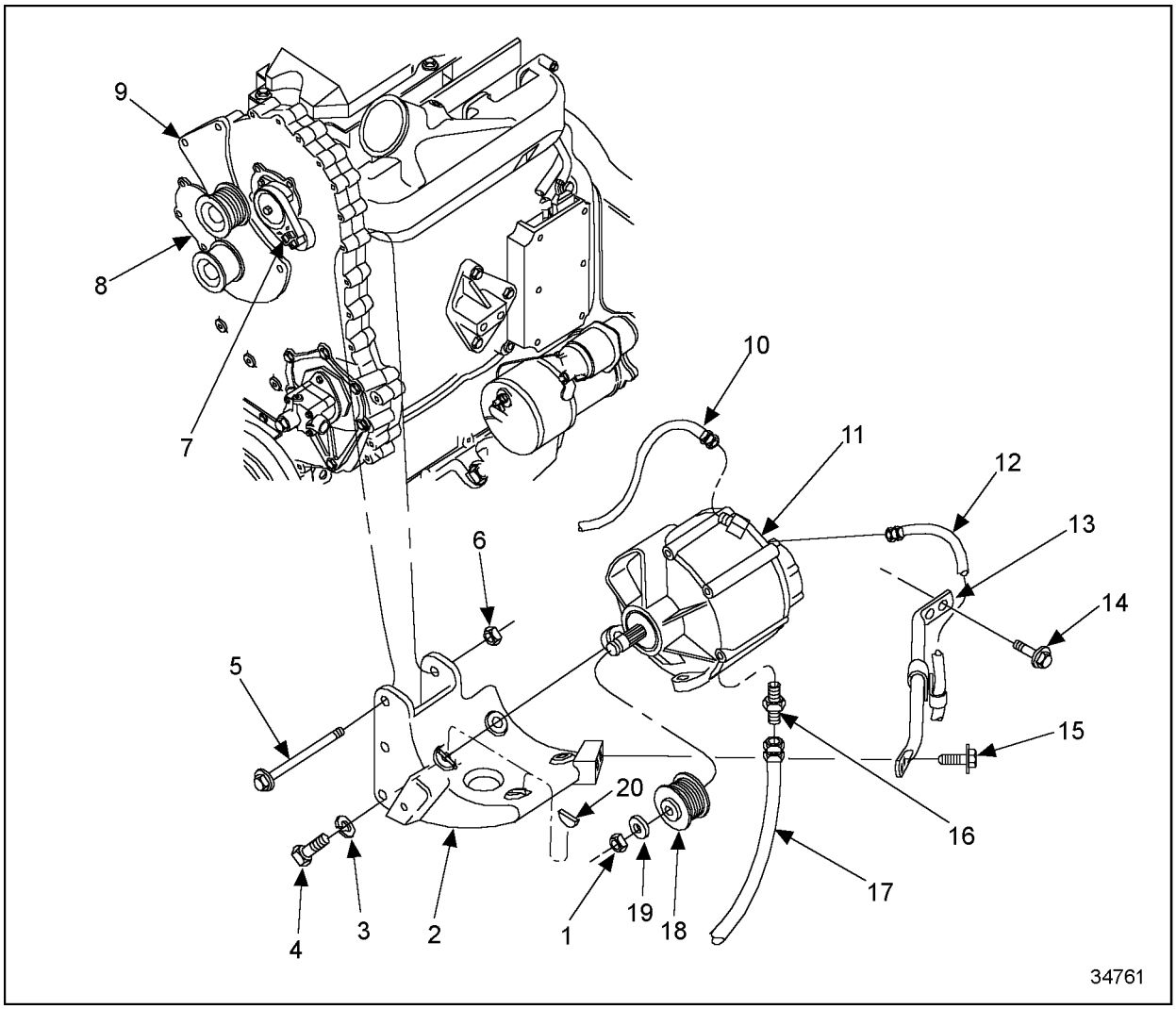

1. Pulley Nut
2. Alternator Mounting Bracket
3. Washer (4)
4. Bolt, Bracket to Alternator (4)
5. Bolt, Bracket to Front Cover (3)
6. Nut (3)
7. Auto Tensioner
8. Idler Assembly
9. Auto Tensioner Mount
10. Alternator Vent Hose
11. Alternator
12. Oil Supply Tube
12. Alternator Brace Bracket
14. Bolt, Support to Block (2)
15. Bolt, Bracket Support (2)
16. Oil Drain Tube Connector
17. Oil Drain Tube
18. Alternator Pulley
19. Washer
20. Woodruff Key (2)

Figure 8-8 Current Coach Alternator and Related Parts

 Copyright © 2004 DETROIT DIESEL CORPORATION

9. While supporting the alternator, remove the adjusting rod bolt and hardened washer. See Figure 8-1.
10. Remove the nut and washer at the rear alternator mounting flange.
11. While supporting the alternator, remove the alternator-to-bracket bolt to prevent it from falling. See Figure 8-1.
12. Remove the two woodruff keys, if equipped.
13. Remove and retain the alternator pulley locknut, alternator pulley, and fan from the unit. See Figure 8-1.

8.2.2.1 Inspection of Alternator

Refer to OEM guidelines for alternator inspection procedures.

8.2.3 Installation of Alternator

Install alternator as follows:

1. Install alternator mounting bracket to the gearcase, if it was removed. Torque the mounting bolts to 58–73 N·m (43–54 lb·ft). See Figure 8-1.
2. If a 50 DN alternator is used, install the pulley and locknut to the alternator (if removed). See Figure 8-8 for former or see Figure 8-7 for current. If an air cooled alternator is used, install the fan, drive pulley and locknut to the alternator (if removed). Torque the pulley retaining nut to 305 N·m (225 lb·ft).
3. If the pulley was not removed, check the retaining nut for proper torque. Torque the retaining nut to 305 N·m (225 lb·ft), as necessary.
4. If the pulley was removed during disassembly, install two woodruff keys in the mounting bracket.
5. Position the alternator on the mounting bracket, and align the holes in the alternator mounting flanges with the tube in the bracket support.

NOTE:
There are two holes in the front alternator end frame mounting flanges. One is threaded and one is not threaded. The threaded hole is positioned up and is used to secure the alternator to the adjusting rod.

6. Install the alternator-to-bracket bolt and locknut. Insert the adjusting rod bolt, with washer installed, through the adjusting rod bracket and into the threaded hole in the alternator end frame. Finger-tighten both bolts. See Figure 8-1.
7. If the alternator is oil-cooled, replace the oil supply, return, and vent lines and tighten fittings securely.
8. If removed install auto belt tensioner and secure with bolt or bolts. Torque center bolt to 30-38 N·m (22-28 lb·ft) and bracket bolt to 58-73 N·m (43-54 lb·ft) if required.

(Rev. 2004) *All information subject to change without notice.*
6SE483 0401 Copyright © 2004 DETROIT DIESEL CORPORATION

NOTICE:
Failure to properly orient the drive belt when installing it over the pulleys may result in belt damage at engine startup.

9. Depending on the application, install the belt(s) carefully over the pulleys on the crankshaft or alternator drive and the drive belt tensioner. If an auto belt tensioner is installed, use a breaker bar with a 3/4 inch drive to rotate the tensioner pulley upward for belt installation. Ensure the grooved and smooth faces of the belt are properly positioned on the pulleys before taking up slack. See Figure 8-9.

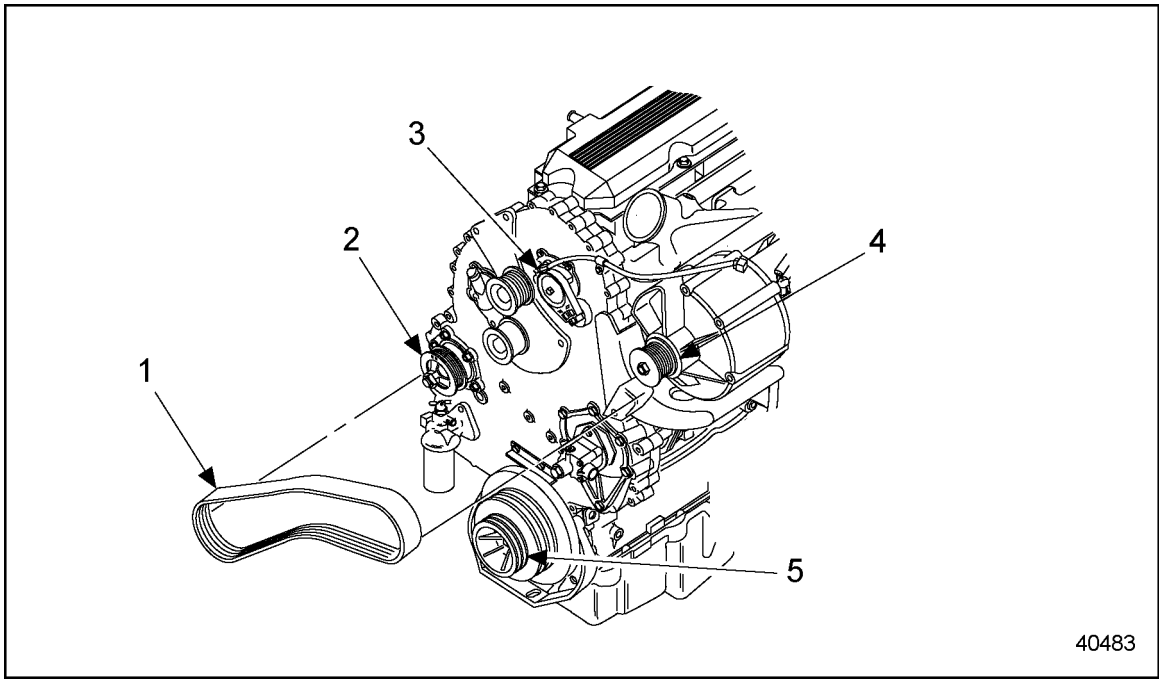

1. Poly-Vee Belt
2. Accesory Drive Pulley
3. Belt Adjusting Bracket
4. Alternator Pulley
5. Crankshaft Pulley

Figure 8-9 Coach Poly-Vee Belt Installation

10. If an auto belt tensioner assembly is not installed, adjust the alternator belt tension. For twin belt-driven alternator refer to section 8.2.3.1. For twin-vee belt-driven 50 DN alternator refer to section 8.2.3.1. For poly-vee belt-driven 50 DN alternator refer to section 8.2.3.2.
11. Torque the alternator-to-mounting bracket bolt and nut and the alternator-to-adjusting rod bracket bolt to 81-95 N·m (60-70 lb·ft).
12. Attach the wires and cables to the alternator. Ensure that each one is correctly installed in the location from which it was removed. Keep all connections clean and tight.

 Copyright © 2004 DETROIT DIESEL CORPORATION

8.2.3.1 Checking Twin-Vee Belt Driven Alternator Belt Tension

The recommended tension for new belts is 556 N (125 lb). However, because new belts lose tension rapidly during the first few minutes of operation, it is important to check the tension after running the engine for 10 to 15 minutes. To check belt tension, use the following procedure:

NOTICE:

Failure to properly orient the drive belt when installing it over the pulleys may result in belt damage at engine startup.

CAUTION:

To avoid injury before starting and running the engine, ensure the vehicle is parked on a level surface, parking brake is set, and the wheels are blocked.

1. Tension the new drive belts to 556 N (125 lb) using a belt tension tool, J 41251-B or equivalent.

CAUTION:

Diesel engine exhaust and some of its constituents are known to the State of California to cause cancer, birth defects, and other reproductive harm.

- ☐ **Always start and operate an engine in a well ventilated area.**
- ☐ **If operating an engine in an enclosed area, vent the exhaust to the outside.**
- ☐ **Do not modify or tamper with the exhaust system or emission control system.**

2. Start and run the engine from 10 to 15 minutes to allow the belts to warm up and seat in the pulley grooves.
3. Stop the engine, and allow it to cool for 10 to 15 minutes.
4. Measure belt tension:
   [a] If tension is 445 N (100 lb) or more, no tensioning is required.
   [b] If tension is less than 445 N (100 lb), retension the belt to 445 N (100 lb).
5. Check belt tension every 100 hours or 7,500 miles (12,000 km). Refer to section 13.13.10 and retension if necessary.

(Rev. 2004) *All information subject to change without notice.*
6SE483 0401 Copyright © 2004 DETROIT DIESEL CORPORATION

8.2.3.2 Checking 12-Rib Poly-Vee Belt-Driven 50 DN Alternator Belt Tension

If an auto belt tensioner assembly is installed, no further action is required as long as the belt has been properly positioned in the grooves of the pulleys. If a belt tensioner/support plate assembly is installed, the belt must be tightened to the required value as outline in the following.

The recommended tension for new poly-vee belt is 1558 N (350 lb). However, because a new belt loses tension rapidly during the first few minutes of operation, it is important to check the tension after running the engine for 10 to 15 minutes. To check belt tension, use the following procedure:

NOTICE:
Failure to properly orient the drive belt when installing it over the pulleys may result in belt damage at engine startup.

1. Tension the new drive belt to 1558 N (350 lb) using belt tension gage J 41251-B or equivalent.
2. Refer to section 8.2.3.1 for the exhaust caution before preceding. Start and run the engine for 10 to 15 minutes to allow the belt to warm up and seat in the pulley grooves.
3. Stop the engine, and allow it to cool for 10 to 15 minutes.
4. Measure belt tension:
   [a] If tension is 1112 N (250 lb) or more, no further tension is required.
   [b] If tension is less than 1112 N (250 lb), adjust belt tension to 1112 N (250 lb).
5. Check belt tension every month, every 100 hours, or every 7,500 miles (12,000 km). Refer to section 13.13.10and re-tension to 1112 N (250 lb), if necessary.

8.2.3.3 Checking Belt Tension on a Two-Groove Powerband® Alternator Drive Belt

The recommended tension for a new belt is 890 N (200 lb). However, because a new belt loses tension rapidly during the first few minutes of operation, it is important to check the tension after running the engine for 10 to 15 minutes. To check belt tension, use the following procedure:

NOTICE:
Failure to properly orient the drive belt when installing it over the pulleys may result in belt damage at engine startup.

1. Tension the new drive belts to 890 N (200 lb) using tension gage, BT-3386–WE-75–225–2N-1.1.3–31–R-P.
2. Refer to section 8.2.3.1 for exhaust caution before preceding. Start and run the engine for 10 to 15 minutes to allow the belts to warm up and seat in the pulley grooves.
3. Stop the engine, and allow it to cool for 10 to 15 minutes.

 Copyright © 2004 DETROIT DIESEL CORPORATION

4. Measure belt tension:
   [a] If tension is 667 N (150 lb) or more, no tensioning is required.
   [b] If tension is less than 667 N (150 lb), adjust the belt tension to 667 N (150 lb).
5. Check belt tension every 100 hours or every 12,000 km (7,500 miles). Refer to section 13.13.10 and re-tension 667 N (150 lb), if necessary.

Powerband® is a registered trademark of the Gates Rubber Company.

8.2.3.4 Checking Belt Tension on a 6 – Rib Poly-vee Alternator Drive Belt

The recommended tension for a new belt is 978 N (220 lb). However, because a new belt loses tension rapidly during the first few minutes of operation, it is important to check the tension after running the engine for 10 to 15 minutes. To check belt tension use the following procedure:

NOTICE:
Failure to properly orient the drive belt when installing it over the pulleys may result in belt damage at engine startup.

1. Tension the new drive belts to 978 N (220 lb) using tension gage, BT-3386–WE-75–225–2N-1.1.3–31–R-P, or equivalent.
2. Refer to section8.2.3.1 for exhaust caution before preceding. Start and run the engine for 10 to 15 minutes to allow the belts to warm up and seat in the pulley grooves.
3. Stop the engine, and allow it to cool for 10 to 15 minutes.
4. Measure belt tension:
   [a] If tension is 800 N (180 lb) or more, no tensioning is required.
   [b] If tension is less than 800 N (180 lb), adjust the belt tension to 800 N (180 lb).
5. Check belt tension every 100 hours or every 12, 000 km (7,500 miles). Refer to section 13.13.10 and re-tension to 800 N (180 lb), if necessary.

(Rev. 2004) *All information subject to change without notice.*
6SE483 0401 Copyright © 2004 DETROIT DIESEL CORPORATION

8.2.3.5 50 DN Alternator Vent Line

Delco 50DN alternators are oil cooled and require an oil supply line from a port on the side of the engine block, an oil drain line from the bottom of the alternator to the oil pan or block, and a vent line to keep the oil within the alternator at an acceptable level and avoid overheating. The original vent line was a No. 4 hose connected between the top of the alternator and a tapped hole in the back of the gear case. Effective June 2000, the former vent line was replaced by a No. 6 braided hose connected between the orifice on top of the alternator and a tapped hole in the mounting plate for the auto belt tensioner assembly. See Figure 8-10. The larger diameter hose provides improved venting and helps eliminate the potential for vent line plugging, which could lead to insufficient cooling of alternator components and shortened alternator life.

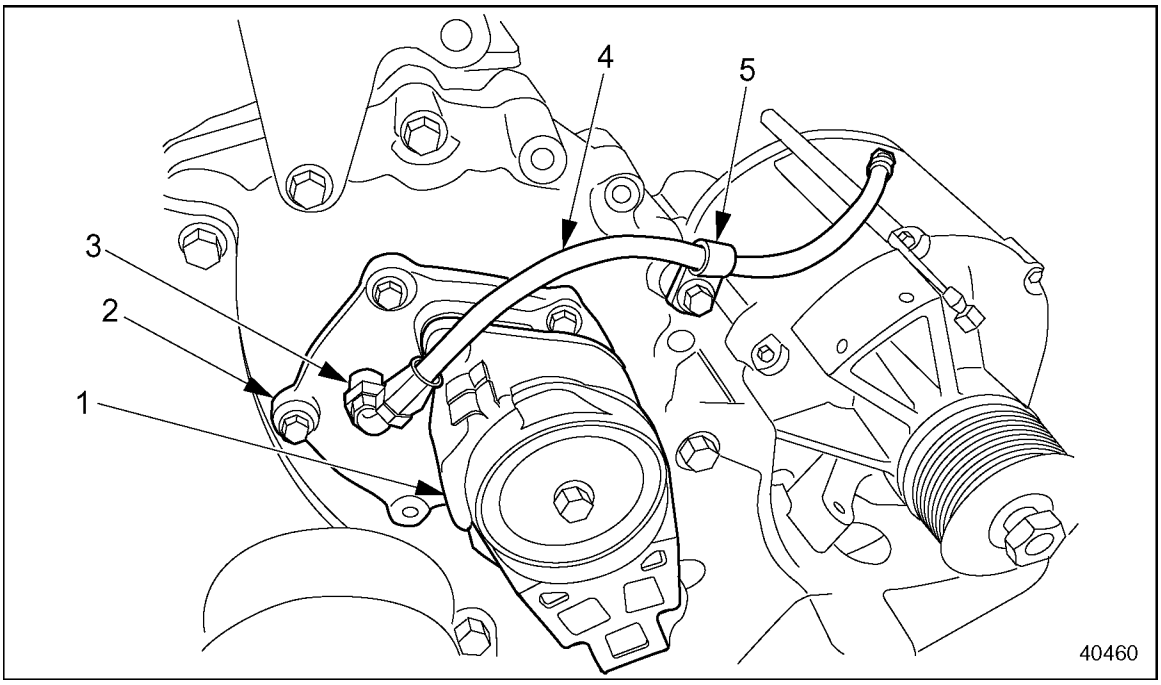

1. Auto Tensioner Assembly
2. Mounting Plate, Auto Tensioner Assembly
3. Connector, 3/8 in. flared to 1/4 in. NPTF, straight
4. Vent Line, Alternator
5. Clip, Hose

Figure 8-10 Vent Line Installed in Auto Tensioner Mounting Plate

 Copyright © 2004 DETROIT DIESEL CORPORATION

INSTALLATION OF THE IMPROVED VENT LINE

The improved vent line is installed between the alternator case and the drive belt auto-tensioner mounting plate on the gear case cover. Existing Series 60 engines with auto tensioner assemblies and engines with former manual drive belt tensioner assemblies may be modified to accept the improved vent line. Use the following procedures:

CAUTION:

To avoid injury from hot surfaces, allow engine to cool before removing any component. Wear protective gloves.

CAUTION:

To avoid injury from accidental engine startup while servicing the engine, disconnect/disable the starting system.

Installation of Vent Line in Drive Belt Auto Tensioner Assembly Mounting Plate

On engines with current drive belt auto tensioner assemblies, install the improved vent line between the alternator and the tensioner mounting plate as follows:

1. With the engine at ambient temperature and cool to the touch, remove and discard the former alternator vent line. Plug the vent line hole at the back of the gear case with a 1/4 in. NPTF square socket head pipe plug.
2. Remove the former vent fitting from the top of the alternator case.
3. Install the 3/8 in. flared to 1/4 in. NPTF, 90 degree elbow into the top of the alternator case.
4. Remove the alternator drive belt. Refer to section 8.2.2.
5. Remove the drive belt auto tensioner assembly from the mounting plate on the gear case cover.
6. Remove the mounting plate from the gear case cover.

(Rev. 2004) *All information subject to change without notice.*
6SE483 0401 Copyright © 2004 DETROIT DIESEL CORPORATION

7. Drill a 0.425 in. diameter hole on the left side of the mounting plate and thread with a 1/4 in. NPTF - 4FF tap. See Figure 8-11for hole location.

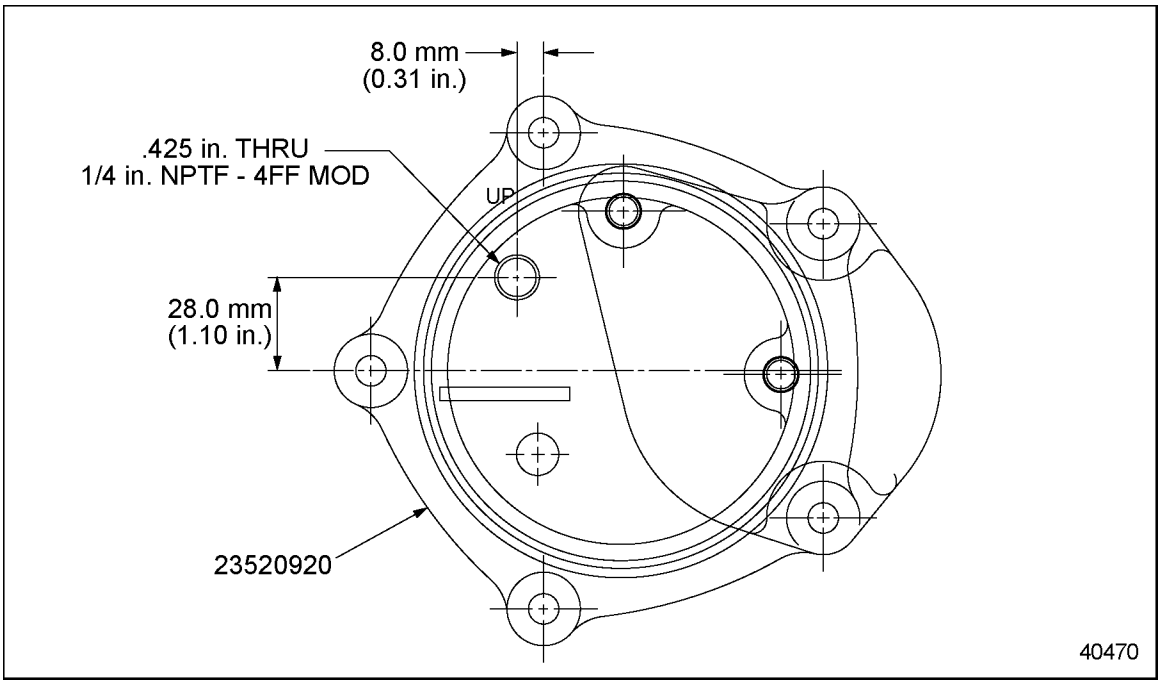

Figure 8-11 Location of Drilled and Tapped Vent Line Hole in Auto Tensioner Mounting Plate

8. Clean the plate carefully to remove all drill chaff.
9. Using a new gasket, install the plate onto the gear case cover.
10. Install the auto tensioner assembly onto the mounting plate.
11. Apply DDC®/Loctite® pipe sealant with Teflon® P/N 23509542, or equivalent, to the 3/8 in. flared to 1/4 in. NPTF straight fitting and install into the mounting plate. Attach the improved vent line and tighten securely.

 Copyright © 2004 DETROIT DIESEL CORPORATION

NOTICE:
Do not drill the engine lifter bracket to install a hose clip, since this will weaken the bracket.

NOTICE:
Do not fasten the hose clip to either of the engine lifter bracket mounting bolts. The hose clip **must** be attached to the bolt on the right side of the lifter bracket to ensure unrestricted air flow through the vent line.

12. To prevent sags and low points, secure the vent line with the hose clip. Remove the gear case cover mounting bolt on the right side of the lifter bracket (bolt No. 12 – see Figure 8-12). Attach the hose clip to the bolt, reinstall, and torque the bolt to 58–73 N·m (43–54 lb·ft).

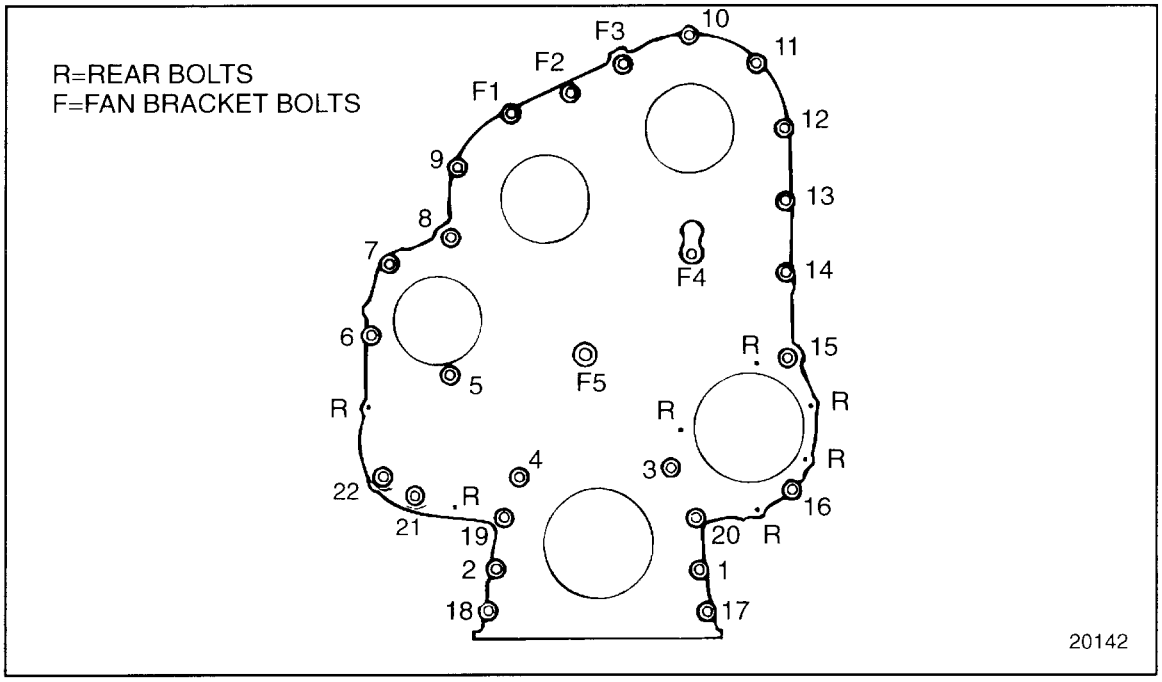

Figure 8-12 Gear Case Cover Mounting Bolt Locations

13. Install the alternator drive belt. Refer to section 8.2.3.
14. Refer to section8.2.3.1 for the exhaust caution before preceeding. Reconnect starting power, start the engine, and check for proper vent line operation.

(Rev. 2004) *All information subject to change without notice.*
6SE483 0401 Copyright © 2004 DETROIT DIESEL CORPORATION

Installation of Vent Line in Front Camshaft Cover on Engines with Former Manual Belt Tensioner Assembly

On engines equipped with the former manual belt tensioner assembly, the front camshaft cover is situated behind the tensioner assembly, requiring its removal. Install the improved vent line on these engines as follows:

CAUTION:

To avoid injury from hot surfaces, allow engine to cool before removing any component. Wear protective gloves.

CAUTION:

To avoid injury from accidental engine startup while servicing the engine, disconnect/disable the starting system.

1. With the engine at ambient temperature and cool to the touch, remove and discard the former alternator vent line. Plug the vent line hole at the back of the gear case with a 1/4 in. NPTF square socket head pipe plug.
2. Remove the former vent fitting from the top of the alternator case.
3. Install the 3/8 in. flared to 1/4 in. NPTF, 90 degree elbow into the top of the alternator case.
4. Remove the alternator drive belt. Refer to section 8.2.2.
5. Remove the manual belt tensioner assembly from the gear case cover.
6. Remove the front camshaft cover from the gear case cover.

 Copyright © 2004 DETROIT DIESEL CORPORATION

7. The center hole in the cover has a 1/8 in. NPTF thread which must be enlarged. Using a 0.425 in. drill bit, carefully drill out the tapped hole. Thread the hole with a 1/4 in. NPTF - 4FF tap. See Figure 8-13.

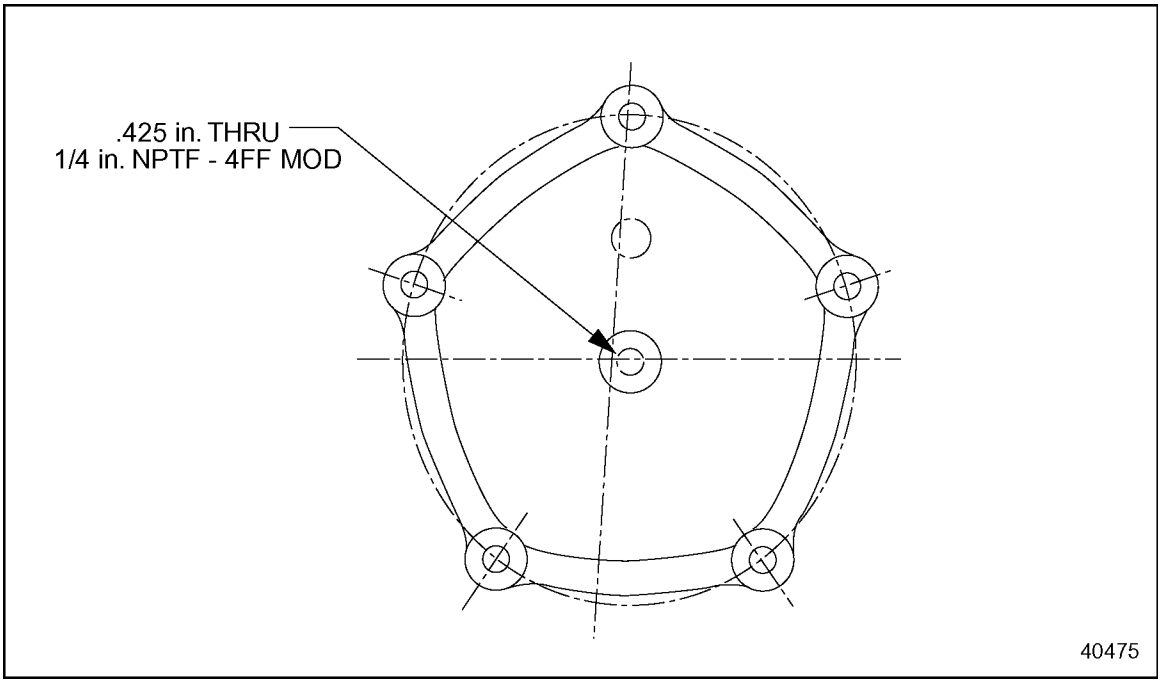

Figure 8-13 Drilled and Tapped Vent Line Hole in Front Camshaft Cover

8. Clean the cover carefully to remove all drill chaff.
9. Using a new gasket, install the front camshaft cover onto the gear case cover.
10. Apply DDC/Loctite® pipe sealant with Teflon P/N 23509542, or equivalent, to the 3/8 in. flared to 1/4 in. NPTF straight fitting and install into the cover. Attach the improved vent line and tighten securely.
11. Install the manual belt tensioner assembly.

(Rev. 2004) *All information subject to change without notice.*
6SE483 0401 Copyright © 2004 DETROIT DIESEL CORPORATION

NOTICE:
Do not drill the engine lifter bracket to install a hose clip, since this will weaken the bracket.

NOTICE:
Do not fasten the hose clip to either of the engine lifter bracket mounting bolts. The hose clip **must** be attached to the bolt on the right side of the lifter bracket to ensure unrestricted air flow through the vent line.

12. To prevent sags and low points, secure the vent line with the hose clip. Remove the gear case cover mounting bolt on the right side of the lifter bracket (bolt No. 12 – see Figure 8-12). Attach the hose clip to the bolt, reinstall, and torque the bolt to 58 –73 N·m (43–54 lb·ft).
13. Install the alternator drive belt. Refer to section 8.2.3.
14. Refer to section8.2.3.1 for the exhaust caution before preceeding. Reconnect starting power, start the engine, and check for proper vent line operation.

 Copyright © 2004 DETROIT DIESEL CORPORATION

8.3 STORAGE BATTERY

The lead-acid storage battery is an electro-chemical device for storing energy and converting chemical energy into electrical energy.

The battery has three major functions:

- ☐ It provides a source of current for starting the engine.
- ☐ It acts as a stabilizer to the voltage in the electrical system.
- ☐ It can, for a limited time, furnish current when the electrical demands exceed the output of the alternator.

⚠ CAUTION:

To avoid injury from battery explosion or contact with battery acid, work in a well-ventilated area, wear protective clothing, and avoid sparks or flames near the battery. Always establish correct polarity before connecting cables to the battery or battery circuit. If you come in contact with battery acid:

- ☐ **Flush your skin with water.**
- ☐ **Apply baking soda or lime to help neutralize the acid.**
- ☐ **Flush your eyes with water.**
- ☐ **Get medical attention immediately.**

If you come in contact with battery electrolyte:

1. Flush your skin with water.
2. Apply baking soda or lime to help neutralize the acid.
3. Flush your eyes with water for 10-15 minutes.
4. Get medical attention immediately.

(Rev. 2004) *All information subject to change without notice.*
6SE483 0401 Copyright © 2004 DETROIT DIESEL CORPORATION

In the selection of a replacement battery, it is always good practice to select one of an "electrical size" at least equal to the battery originally engineered for the particular equipment by the manufacturer. This information is listed in Table 8-2.

Series 60 Engine Family	System Voltage	Minimum Battery Rating [SAE Cold Cranking AMPS (CCA) at -17.8°C (0°F)]
11.1 Liter	12V	1875 CCA*
12.7 Liter	12V	1875 CCA*
12.7 Liter†	24V	950 CCA*

*Recommendation based on the use of Delco-Remy 42MT (or equivalent) cranking motor.

†Heat exchanger-cooled pleasure craft marine.

Table 8-2 Electrical Size of Engine Replacement Battery

8.3.1 Replacement of Storage Battery

Refer to the OEM for replacement procedure.

8.3.2 Removal and Cleaning of Storage Battery

Precleaning of the battery carrier may be necessary. Refer to OEM guidelines.

Remove storage battery as follows:

1. Disconnect grounded terminal of the battery.
2. Remove the cable clamps and felt washer.
3. Remove the battery.

8.3.2.1 Inspection of Storage Battery

Refer to OEM guidelines, for storage battery inspection procedure.

 Copyright © 2004 DETROIT DIESEL CORPORATION

8.3.3 Installation of Storage Battery

Install the battery as follows:

1. Seat the battery level in its carrier.

NOTICE:
Do not draw the hold-down clamps down too tightly or the battery case will become distorted or crack.

2. Tighten the hold-down clamps evenly until snug.
3. Attach the cable clamps after ensuring the cables and terminal clamps are clean and in good condition.
4. Place a new felt washer at the base of each terminal beneath the cable clamps, to make the cable connections as corrosion resistant as possible.
5. Coat the entire connection with a heavy general-purpose grease.

NOTE:
Ensure the ground cable is clean and tight at the engine block or frame.

NOTICE:
Connect the **grounded** terminal of the battery **last** to avoid short circuits, which will damage the battery.

6. Check the polarity to ensure the battery is not reversed with respect to the generating system.
7. Refer to section 11.1.8 for verification of proper storage battery installation.

(Rev. 2004) *All information subject to change without notice.*
6SE483 0401 Copyright © 2004 DETROIT DIESEL CORPORATION

8.4 CRANKING MOTOR

The cranking motor is bolted to the flywheel housing. See Figure 8-14.

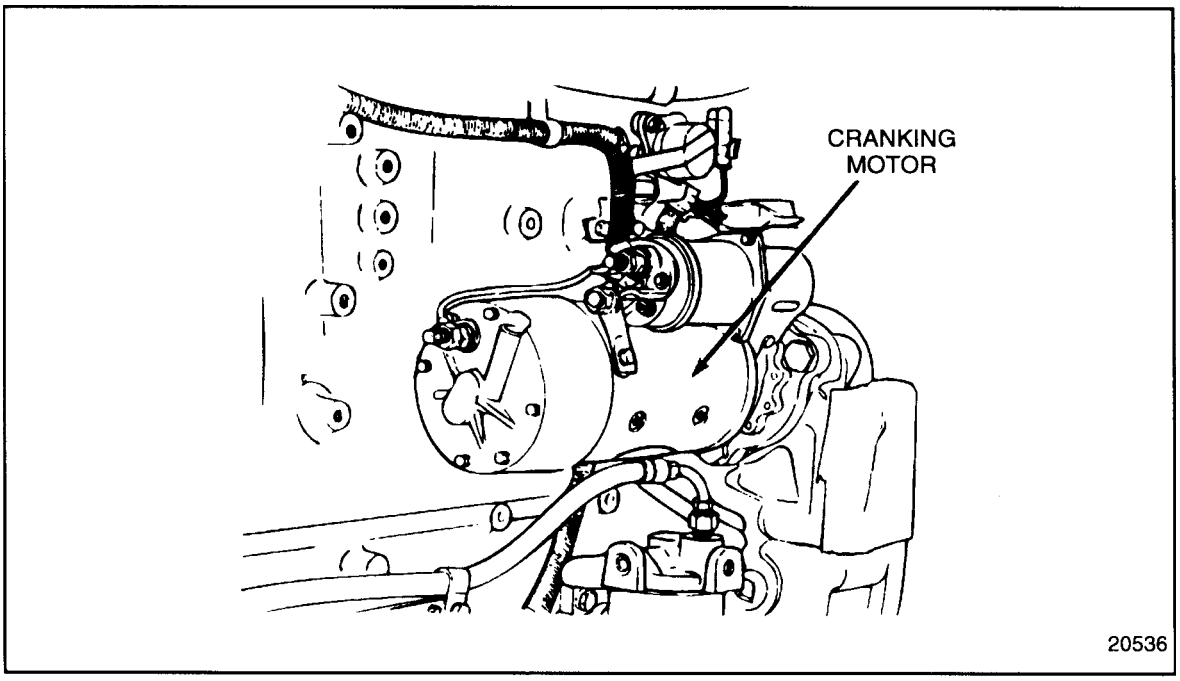

Figure 8-14 Cranking Motor Mounting

 Copyright © 2004 DETROIT DIESEL CORPORATION

NOTICE:

To prevent excessive overrun and damage to the drive and armature windings, the switch should be opened immediately when the engine starts. A cranking period should not exceed 15 seconds without stopping to allow the motor to cool for at least 15 seconds.

When the cranking circuit is closed, a drive pinion on the armature shaft engages with the teeth on the engine flywheel ring gear to crank the engine. When the engine starts, it is necessary to disengage the drive pinion to prevent the armature from overspeeding and damaging the cranking motor. To accomplish this, the cranking motor is equipped with an over-running clutch within the drive pinion. The cranking motor drive pinion and the engine flywheel ring gear must be matched to provide positive engagement and to avoid clashing of the gear teeth.

NOTE:
Some engines may be equipped with air starters. Contact starter manufacturer for operating characteristics and rebuilding procedures.

The 42 MT cranking motor typically used on the engine has a nose housing that can be rotated to obtain a number of different solenoid positions with respect to the mounting flange. The commutator end cap can be removed to inspect the brushes, in most cases, without removing the cranking motor from the vehicle.

NOTE:
The 50 MT cranking motor is used on heat exchanger-cooled pleasure craft marine engines.

(Rev. 2004) *All information subject to change without notice.*
6SE483 0401 Copyright © 2004 DETROIT DIESEL CORPORATION

The cranking motor armature is supported by three sintered bronze bearings located, one each, in the nose and intermediate housings, with one in the commutator end cap. See Figure 8-15.

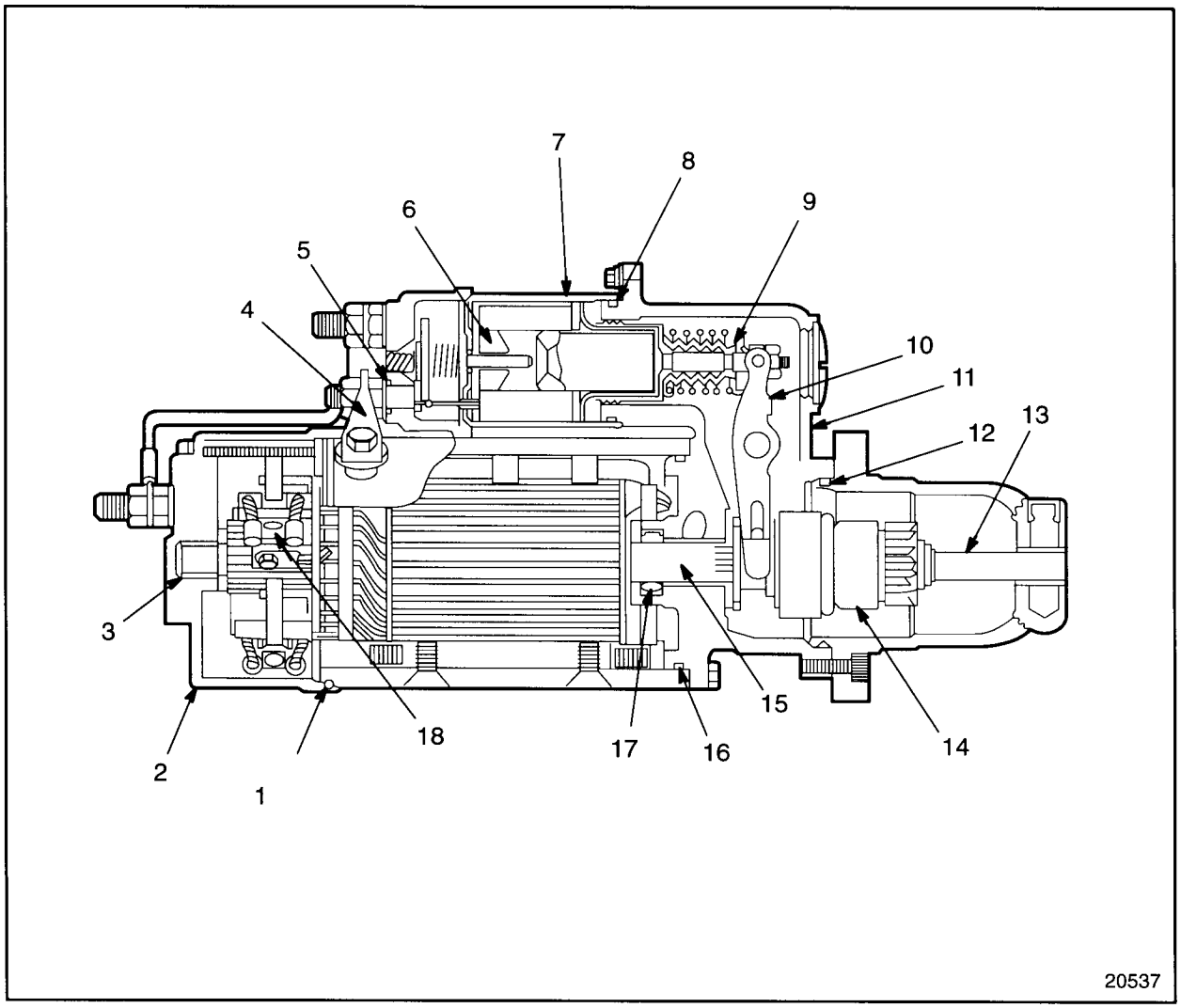

1. O-ring
2. End Cap (Removal for Inspection)
3. Bronze Bearing
4. Connector Strap
5. Gasket
6. Low Friction Bushing
7. Seamless, One-piece Solenoid Case
8. O-ring
9. Sealing Boot
10. Shift Mechanism (Totally Enclosed)
11. Two-piece Housing
12. O-ring
13. Shaft
14. Heavy-duty Drive Overrunning Clutch
15. Shaft
16. O-ring
17. Shaft Seal
18. One-piece Brush

Figure 8-15 Typical Cranking Motor Cross-section

 Copyright © 2004 DETROIT DIESEL CORPORATION

Sintered bronze bearings used in the current cranking motors have a dull finish, compared to the former machined, cast bronze bearings, which had a shiny finish.

The cranking circuit may contain a key start switch or push switch (or both), a relay, magnetic switches, solenoids, oil pressure switch, fuel pressure switch, and other protective devices. For the complete cranking circuit, refer to the vehicle manufacturer's wiring diagram.

For basic cranking circuit, see Figure 8-16.

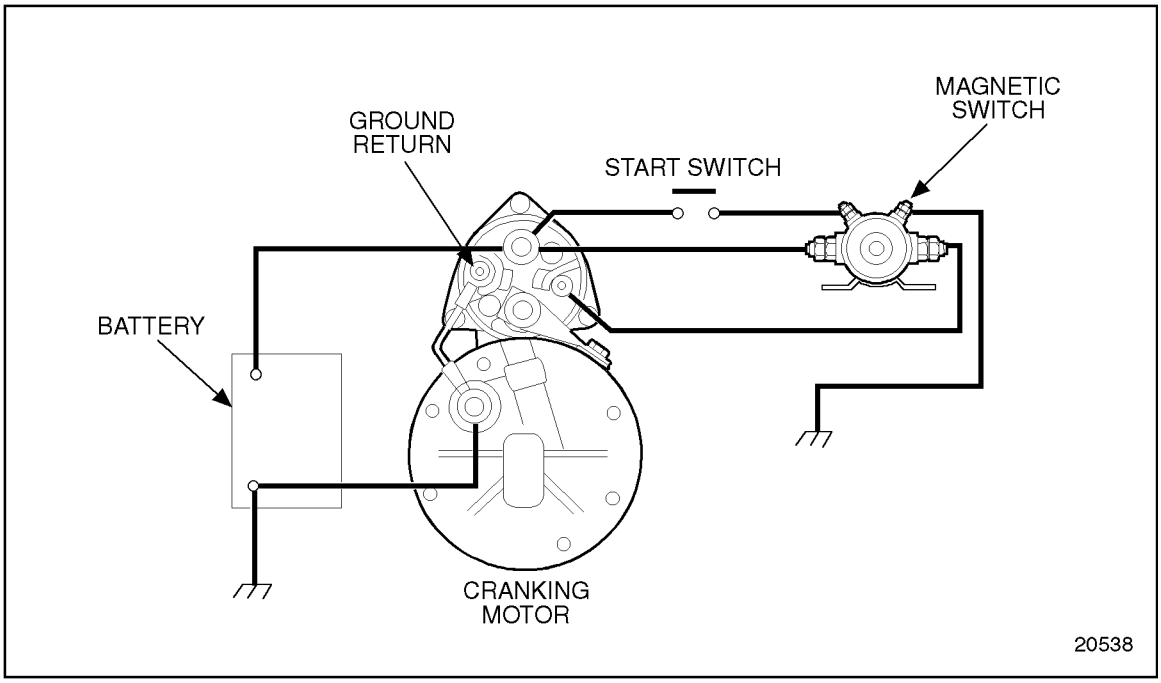

Figure 8-16 Basic Cranking Circuit

A solenoid, mounted on the cranking motor housing, operates the over-running clutch drive by linkage and a shift lever. When the start switch is closed, the magnetic switch contacts close, and the solenoid windings are connected to the battery. The resulting plunger and shift lever movement causes the pinion to engage the engine flywheel ring gear and the solenoid main contacts to close, and the cranking takes place.

(Rev. 2004) *All information subject to change without notice.*
6SE483 0401 Copyright © 2004 DETROIT DIESEL CORPORATION

8.4.1 Repair of Cranking Motor

Refer to the OEM guidelines for cranking motor repair procedures.

8.4.2 Removal of Cranking Motor

Precleaning is not necessary.

Remove the cranking motor as follows:

CAUTION:

To avoid injury from electrical shock, follow OEM furnished operating instructions prior to usage.

1. Remove the ground strap or negative cable(s) from the battery(s).
2. Tag each lead to ensure correct connections when the cranking motor is reinstalled.
3. Disconnect the cranking motor cables and solenoid wiring.
4. Support the motor, and remove the three bolts which secure it to the flywheel housing.
5. Pull the motor out to remove it from the flywheel housing.

If the nose housing requires relocation, perform the following steps:

NOTICE:

The solenoid should not be located below the centerline of the cranking motor. Dust, oil, moisture and foreign material can collect and cause solenoid failure.

1. Remove the six socket-head screws (one short and five long) and six neoprene plugs from the unused holes if a twelve-hole mounting flange is used.
2. Turn the nose housing to the required position.
3. Install the six socket-head screws, with the short screw in the shallow hole nearest the solenoid and six neoprene plugs, if a twelve hole mounting flange is used.
4. Torque the screws to 18-23 N·m (13-17 lb·ft).

 Copyright © 2004 DETROIT DIESEL CORPORATION

8.4.3 Installation of Cranking Motor

Install the cranking motor as follows:

CAUTION:

To avoid injury from electrical shock, follow OEM furnished operating instructions prior to usage.

1. Support the cranking motor, and install the three bolts that secure it to the flywheel housing.
2. Connect the cranking motor cables and the solenoid wiring.
3. Install the ground strap or negative cable(s) to the battery(s).
4. If an aluminum flywheel housing is used, torque the cranking motor attaching bolts to 187-209 N·m (138-154 lb·ft). If a cast iron flywheel housing is used, torque the cranking motor attaching bolts to 245-306 N·m (181-226 lb·ft).
5. If equipped with a 42 MT or 50 MT starting motor, install wiring terminal leads to the cranking motor and the solenoid switch.
6. Torque the smaller connections to 1.8-3.4 N·m (16-30 lb· in.). Torque the larger connections to 27-34 N·m (20-25 lb·ft).

NOTE:
Keep all of the electrical connections clean and tight.

7. Refer to section 11.2 for verification of proper cranking motor installation.

(Rev. 2004) *All information subject to change without notice.*
6SE483 0401 Copyright © 2004 DETROIT DIESEL CORPORATION

8.5 TACHOMETER DRIVE

The Series 60 engine can be configured with or without a mechanical tachometer drive. A camshaft drive gear access cover mounted to the gear case cover and a slotted head camshaft bolt must be used with the mechanical tachometer drive option. See Figure 8-17.

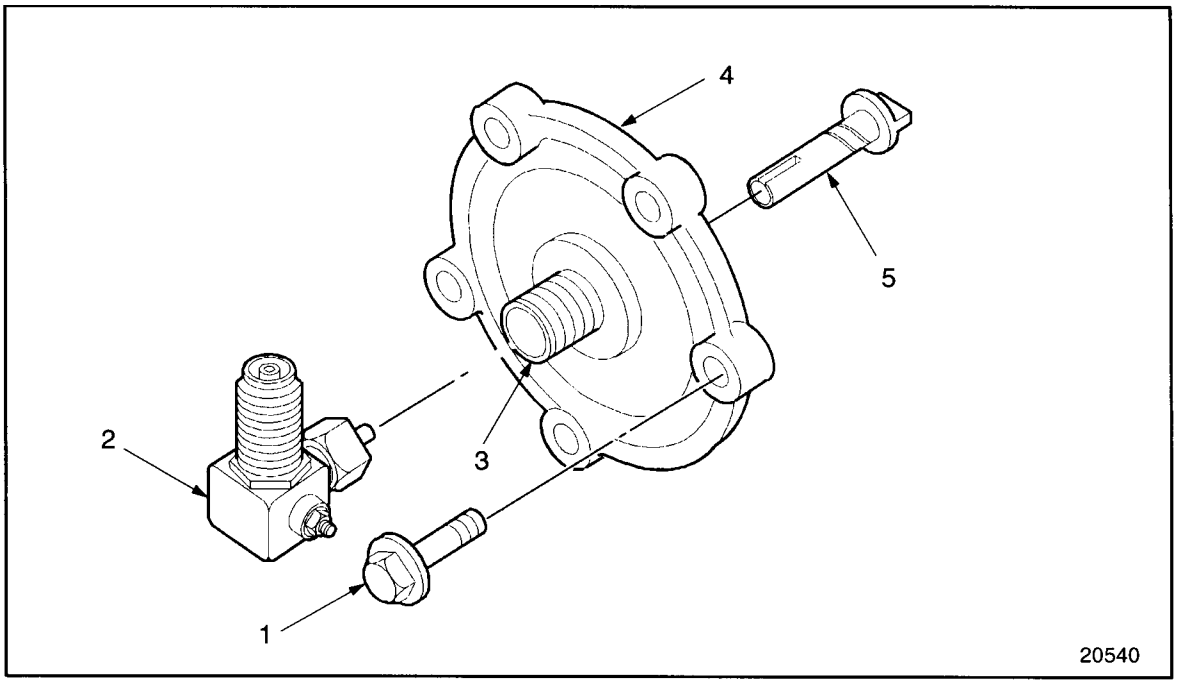

1. Attaching Bolts
2. Tachometer Drive Adaptor
3. Tachometer Drive Unit
4. Camshaft Drive Gear Access Cover
5. Tachometer Drive Shaft

Figure 8-17 Tachometer Drive and Related Parts

 Copyright © 2004 DETROIT DIESEL CORPORATION

The tachometer drive is driven off the head of the camshaft drive gear retaining bolt, which must be of the slotted configuration, and mates with the blade of the tachometer drive unit. The tachometer drive unit is driven at half crankshaft speed. A tachometer drive adaptor is attached to the drive. See Figure 8-18.

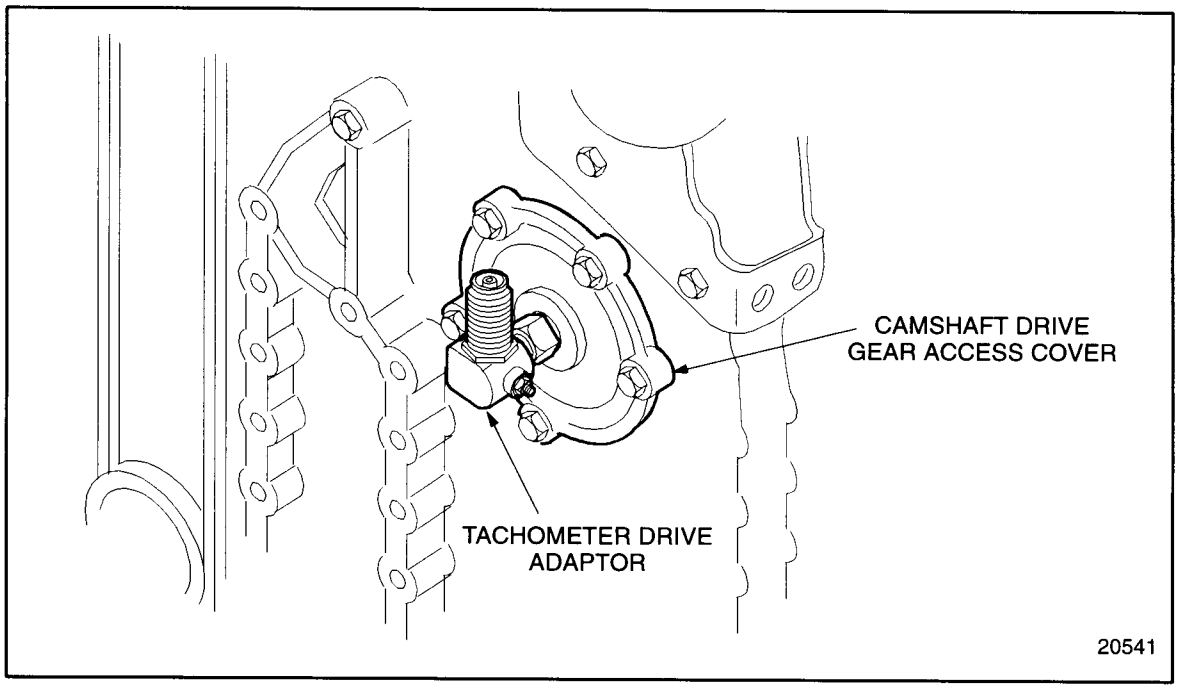

Figure 8-18 Tachometer Drive Adaptor

A grease fitting on the tachometer drive adaptor is supplied for lubrication. The tachometer drive adaptor should be greased any time the vehicle chassis is lubricated.

(Rev. 2004) *All information subject to change without notice.*
6SE483 0401 Copyright © 2004 DETROIT DIESEL CORPORATION

8.5.1 Repair or Replacement of Tachometer Drive

To determine if repair is possible or replacement is necessary, perform the following procedure. See Figure 8-19.

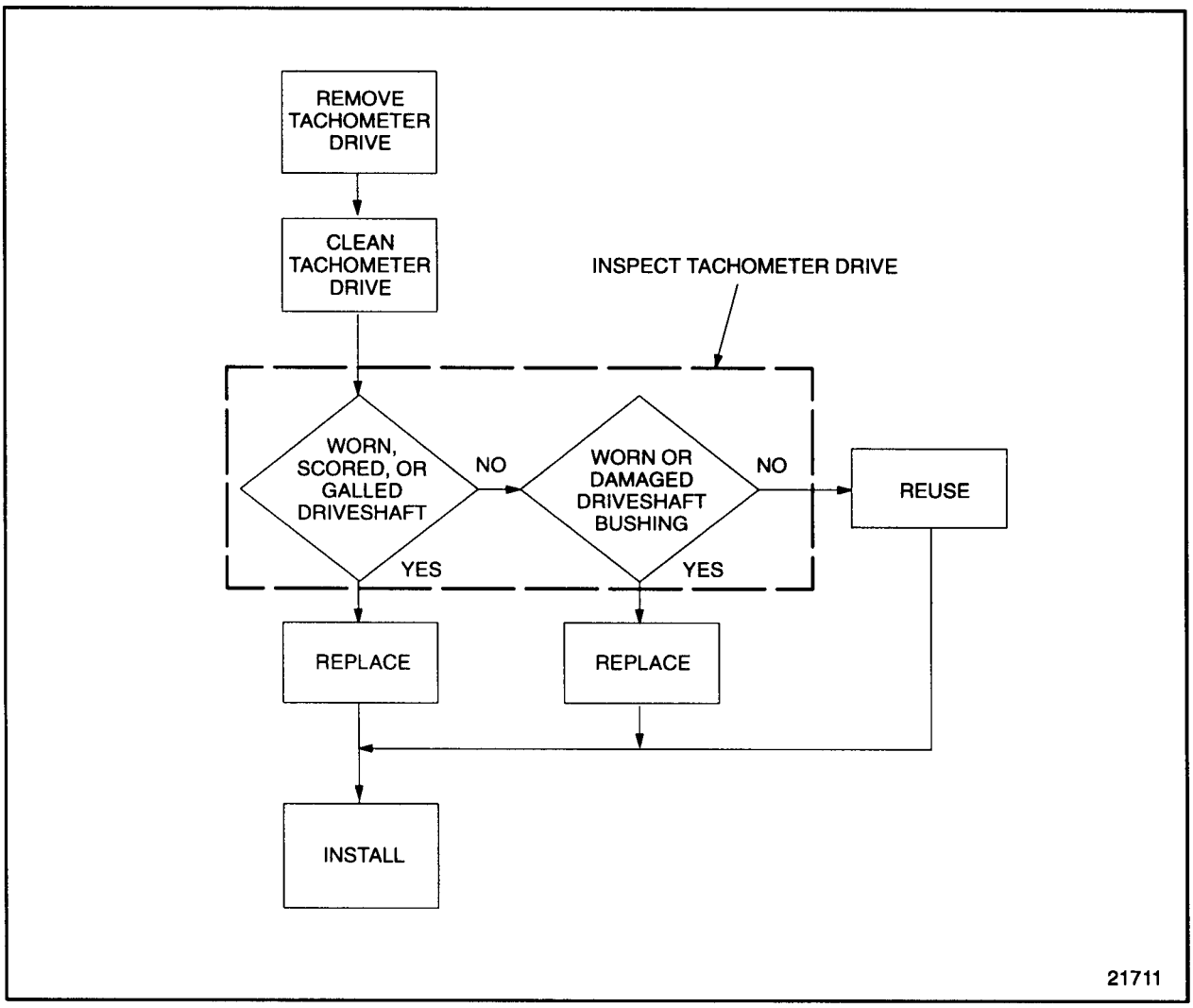

Figure 8-19 Flowchart for Repair or Replacement of Tachometer Drive

 Copyright © 2004 DETROIT DIESEL CORPORATION

8.5.2 Removal of Tachometer Drive Adaptor

Remove the tachometer drive adaptor as follows:

1. Disconnect the tachometer drive cable from the tachometer drive adaptor by unscrewing the bezel nut and pulling the cable straight out of the unit.
2. Unscrew the nut that retains the tachometer drive adaptor to the tachometer drive in the camshaft drive gear access cover.
3. Remove the tachometer drive adaptor.
4. Loosen and remove the five bolts that secure the camshaft drive gear access cover to the gear case cover.
5. Tap the cover with a rubber mallet or plastic hammer to break the gasket loose.
6. Remove the camshaft drive gear access cover/tachometer drive unit from the gear case.
7. Remove the tachometer drive shaft from the access cover.

8.5.3 Cleaning of Tachometer Drive Adaptor

Clean the tachometer drive prior to inspection.

Clean all of the gasket material from the mating surfaces of the camshaft drive gear access cover and the gear case.

8.5.3.1 Inspection of Tachometer Drive

Inspect the tachometer drive as follows:

1. Visually inspect the drive shaft for galling, scoring, or wear.
   [a] If the drive shaft is damaged or excessively worn, replace with new part. Refer to section 8.5.4.
   [b] If the drive shaft is not damaged, reuse part. Refer to section 8.5.4.
2. Inspect the tachometer drive shaft bushing for wear or damage.
   [a] If bushing is excessively worn or damaged, replace tachometer drive gear access cover assembly as a unit. Refer to section 8.5.4.
   [b] If bushing is not worn or damaged, reuse part. Refer to section 8.5.4.

(Rev. 2004) *All information subject to change without notice.*
6SE483 0401 Copyright © 2004 DETROIT DIESEL CORPORATION

8.5.4 Installation of Tachometer Drive

Install tachometer drive as follows:

1. Lubricate the drive shaft with clean engine lubricating oil.
2. Install the drive shaft into the bushing in the access cover.
3. Using a new gasket, install the camshaft drive gear access cover tachometer drive unit to the engine by indexing the tachometer drive blade with the slotted camshaft drive gear retaining bolt. See Figure 8-20.

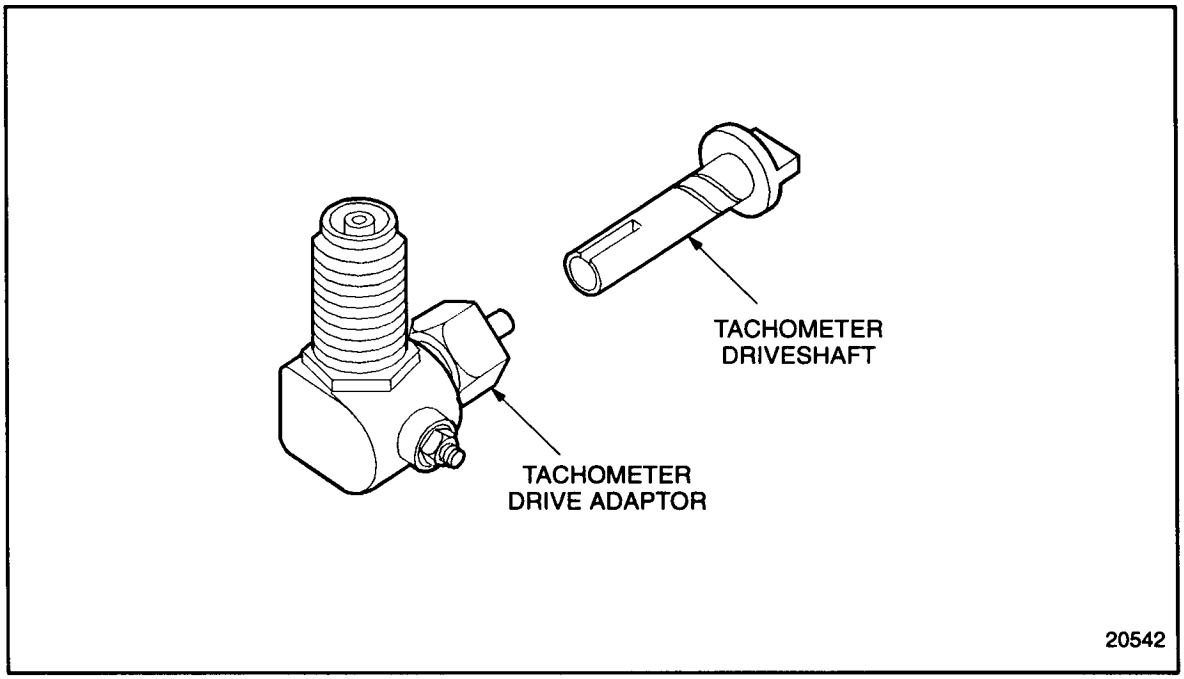

Figure 8-20 Tachometer Drive Unit Installation

 Copyright © 2004 DETROIT DIESEL CORPORATION

4. Install the camshaft drive gear access cover retaining bolts, and torque the bolts to 30-38 N·m (22-28 lb·ft) using the pattern as shown in the illustration. See Figure 8-21.

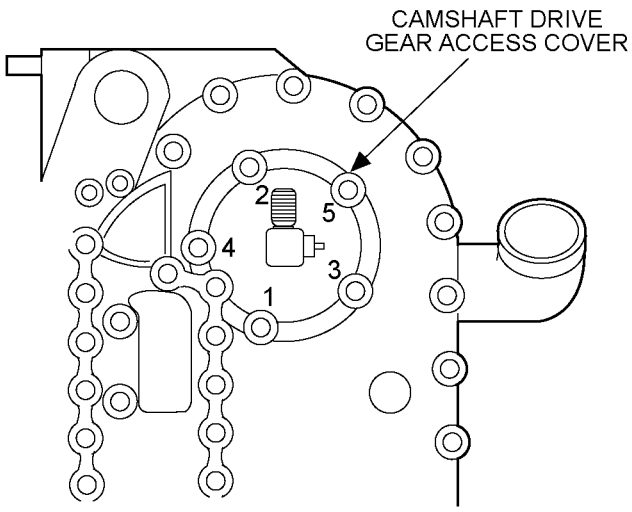

Figure 8-21 Camshaft Drive Gear Access Cover Bolt Tightening Sequence

5. Index the tachometer drive adaptor shaft with the drive shaft.
6. Install the tachometer drive adaptor to the drive. Torque the nut to 12-15 N·m (9-11 lb·ft).
7. Index the tachometer drive cable to the adaptor, and install the cable. Finger-tighten the bezel nut.

NOTICE:
Do not use a power grease gun when lubricating the tachometer drive. Over-lubrication can damage the drive. One shot of grease with a hand operated grease gun is sufficient.

8. Lubricate the tachometer drive unit at the grease fitting using chassis lube.
9. Refer to section 11.8 for verification of proper tachometer drive installation.

(Rev. 2004) *All information subject to change without notice.*
6SE483 0401 Copyright © 2004 DETROIT DIESEL CORPORATION

8.6 DDEC III/IV ENGINE SENSOR HARNESS

The DDEC III/IV engine sensor harness for vehicle engines was originally equipped with five metal retaining clips and was secured to the engine cylinder block with bolts. Effective with engines built in May of 1995, three of the metal clips were replaced by three plastic push-in clips. See Figure 8-22.

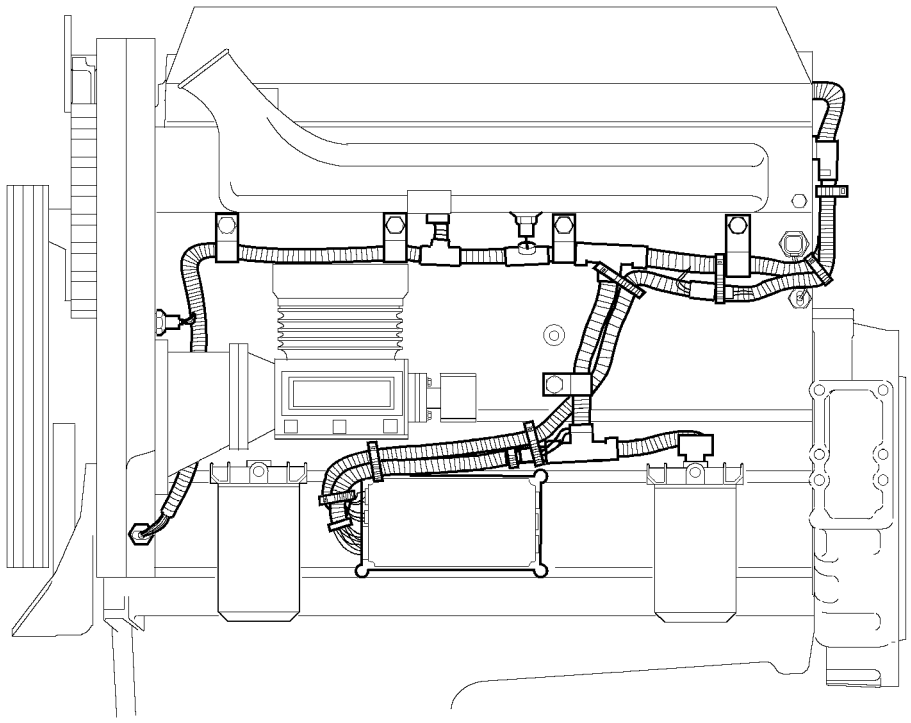

Figure 8-22 Typical DDEC III/IV Engine Sensor Harness

 Copyright © 2004 DETROIT DIESEL CORPORATION

Due to a hardware change made in October of 1995 to the DDEC® III ECM, a path to ground can arise during ECM powerdown which may allow unintended engine cranking.

Unintended engine cranking can occur if *all*of the following conditions exist:

- ☐ The engine has an ECM manufactured between October of 1995 and September of 1996.
- ☐ The engine is equipped with the Optimized Idle™ feature.
- ☐ The ignition remains turned on while battery power is removed from the ECM during servicing.

NOTE:
This condition will not occur on engines manufactured after September of 1996.

To address this concern and eliminate the potential for unintended engine cranking under the conditions listed above, an Optimized Idle Starter Relay Harness Overlay Service Kit was released for engines with ECM's manufactured between October of 1995 and September of 1996.

8.6.1 Diagnostic Procedures

Basic mechanical checks should be made beforehand to verify that the problem is definitely related to the electrical portion of the system. If the basic mechanical checks fail to locate the problem, refer to the *Detroit Diesel Single ECM Troubleshooting Manual,* (6SE497). Start by reading the "Basic Knowledge Required" section before attempting to diagnosis electrical faults.

(Rev. 2004) *All information subject to change without notice.*
6SE483 0401 Copyright © 2004 DETROIT DIESEL CORPORATION

8.6.2 Repair and Replacement of DDEC III/IV Engine Sensor Harnesses

To determine if repair is possible or replacement is necessary, perform the following procedure. See Figure 8-23.

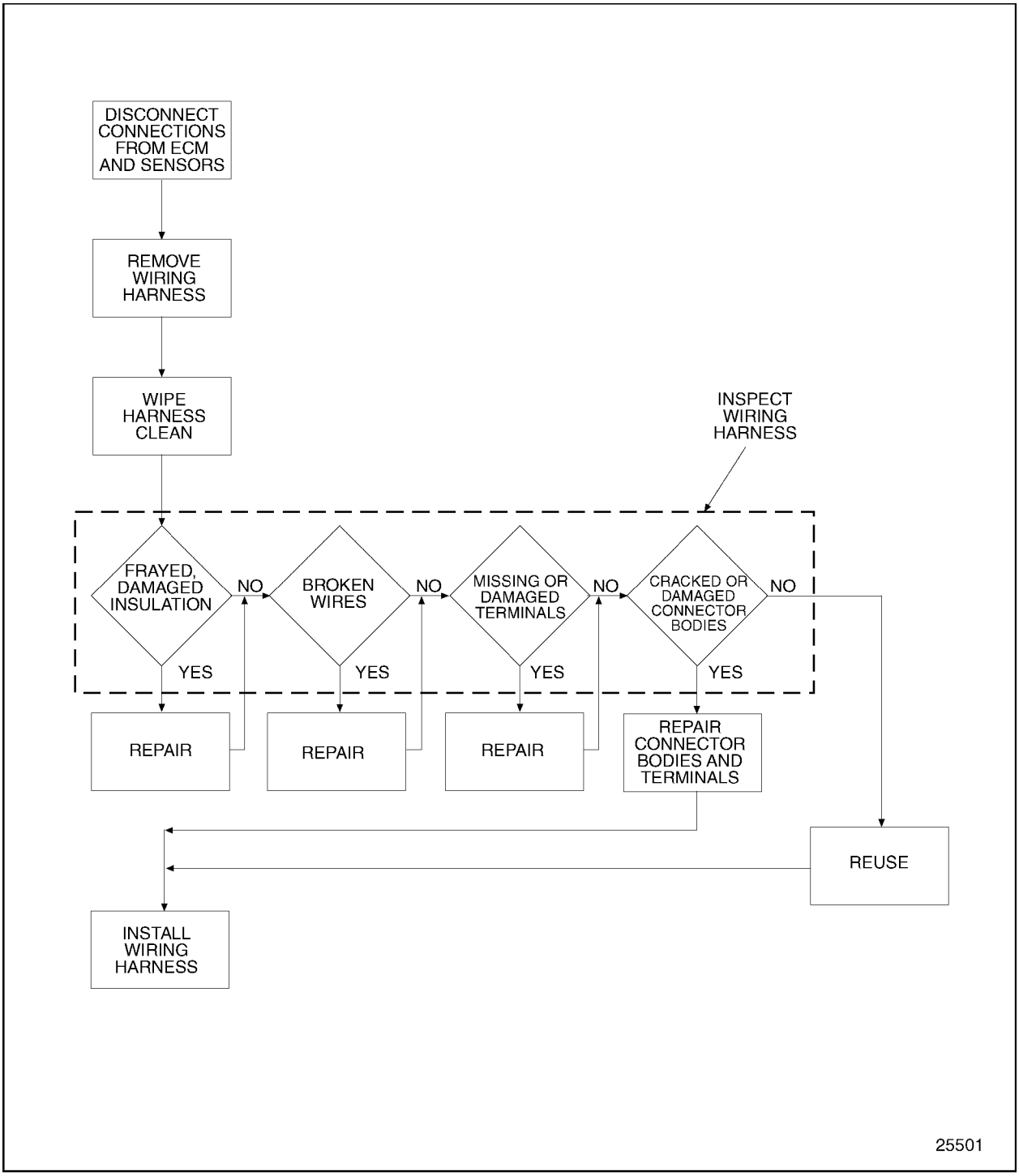

Figure 8-23 Flowchart for Repair or Replacement of Engine Sensor Harness

 Copyright © 2004 DETROIT DIESEL CORPORATION

8.6.3 Removal of DDEC III/IV Engine Sensor Harnesses

Remove the DDEC III/IV engine sensor harness as follows:

1. Disengage the locking tang on each individual sensor connector body. See Figure 8-24.

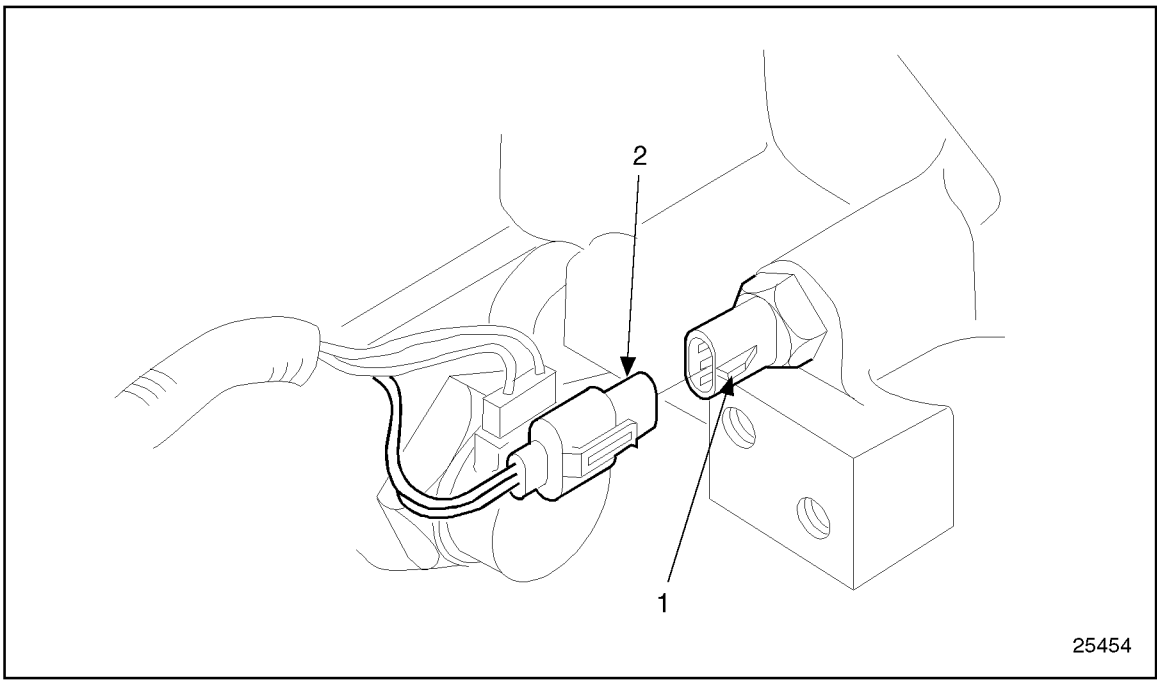

1. Locking Tang
2. Connecting Body

Figure 8-24 Typical Sensor Connector Locking Tang

2. Grasp the connector body and gently pull it from the sensor.
3. Install the harness clips:
   [a] Remove the bolts securing the metal harness clips to the engine.
   [b] Proceed to step 6.
4. If the engine has metal and plastic harness clips:
   [a] Remove the bolts securing the metal harness clips to the engine.
   [b] The plastic harness clips do not require removal from the engine. Open the clips by inserting a tool such as a flat blade screwdriver into the slot on the side and twist to unhook the clip.

(Rev. 2004) *All information subject to change without notice.*
6SE483 0401 Copyright © 2004 DETROIT DIESEL CORPORATION

NOTICE:
Do not attempt to remove the plastic harness clips from the engine by pulling or forcing them out with a flat tool. This will damage the clip threads, which may make them unusable.

5. If removal of the plastic harness attaching clips from the engine is required, unscrew them from the block by rotating them in a counterclockwise direction.
6. Remove the 30-pin connector from the ECM by loosening the connector attaching bolt. Carefully pull the connector from the ECM and remove the harness from the engine.

8.6.4 Installation of DDEC III/IV Engine Sensor Harness

Install the DDEC III/IV engine sensor harness as follows:

1. Install the 30-pin connector to the ECM, and torque the connector body attaching bolt to 0.79-1.47 N·m (7-13 lb· in.).
2. If removal of the plastic harness attaching clips from the engine is required, unscrew them from the bolt holes in the block by rotating in a counterclockwise direction.
3. If the engine has five metal harness clips:
   [a] Install the five bolts securing the metal harness clips to the engine. Torque bolts to 30-38 N·m (22-28 lb·ft).
   [b] Proceed to step 5
4. If the engine has two metal and three plastic harness clips:
   [a] Install the two bolts securing the metal harness clips to the engine. Torque bolts to 30-38 N·m (22-28 lb·ft).
   [b] Install new clips by pressing the threaded clip base into the appropriate block bolt hole, as required.
   [c] Place the harness into the open plastic clips and snap the clips shut to retain the harness.

NOTE:
To ensure proper engine sensor harness support, all missing and damaged plastic harness clips must be replaced.

5. Carefully plug the two-pin and three-pin harness connectors into the appropriate sensors.
6. If the engine ECM is programmed with the Optimized Idle option, a starter relay harness overlay kit may be installed. Refer to section 8.6.4 and refer to section 8.6.5.

 Copyright © 2004 DETROIT DIESEL CORPORATION

8.6.5 Installation of Starter Relay Harness Overlay Service Kit

Install starter relay harness overlay service kit on an Optimized Idle option-equipped vehicle engine as follows:

NOTE:
Optimized idle is not available on industrial or marine engines.

8.6.5.1 Qualifying the ECM for Use with the Starter Relay Harness Overlay Kit

Before installing the starter relay harness overlay service kit, the ECM *must* be qualified for use with the kit and replaced, if necessary. Qualify the ECM for use as follows:

Refer to the DDEC III/IV ECM serial number/model number label located on top of the ECM.

If the second letter of the ECM *serial number*is "D," "E," or "F" and the last three characters of the *model number* are "A01", "A02", "A03", or "A04", the ECM *must* be replaced before the kit can be installed. Following is an example of an ECM that must be replaced:

ECM Serial Number S E 600KZM ***/ ECM Model Number*** 6DD2368 A03

If the second letter of the ECM *serial number*is "A" through "C" or any letter from "G" onward *and* the last three characters of the *model number* are "C01" through "C03" or "A05" and later alpha-numeric designations, the ECM *does not* require replacement before the kit can be installed. Following are examples of ECMs that do not require replacement:

ECM Serial Numbers SC 6005QM **/** ***ECM Model Number*** 6DD2296CO3 or 6DD2296AO5.

A summary of this procedure is listed in Table 8-3.

If Second Letter of ECM Serial Number Is:	And Last 3 Characters of ECM Model Number Are:	Disposition of ECM
"D", "E", or "F"	A02, A03, or A04	Replace ECM
"A-C", "G" and later letters	C01-C03, A05 and later alpha-numeric designations	Use ECM

Table 8-3 Qualifying ECM for Use with Optimized Idle Overlay Kit

8.6.6 Preparation of Engine for Installation of Optimized Idle Starter Relay Harness Overlay Kit

Prepare engine for installation of optimized idle starter relay harness overlay kit as follows:

1. Place the transmission in neutral, set the parking brake, stop the engine, block the vehicle wheels, and close the hood/cab.
2. Turn ignition to the *On*position, but do not start the engine.

(Rev. 2004) *All information subject to change without notice.*
6SE483 0401 Copyright © 2004 DETROIT DIESEL CORPORATION

3. Locate Optimized Idle starter relay. See Figure 8-25.

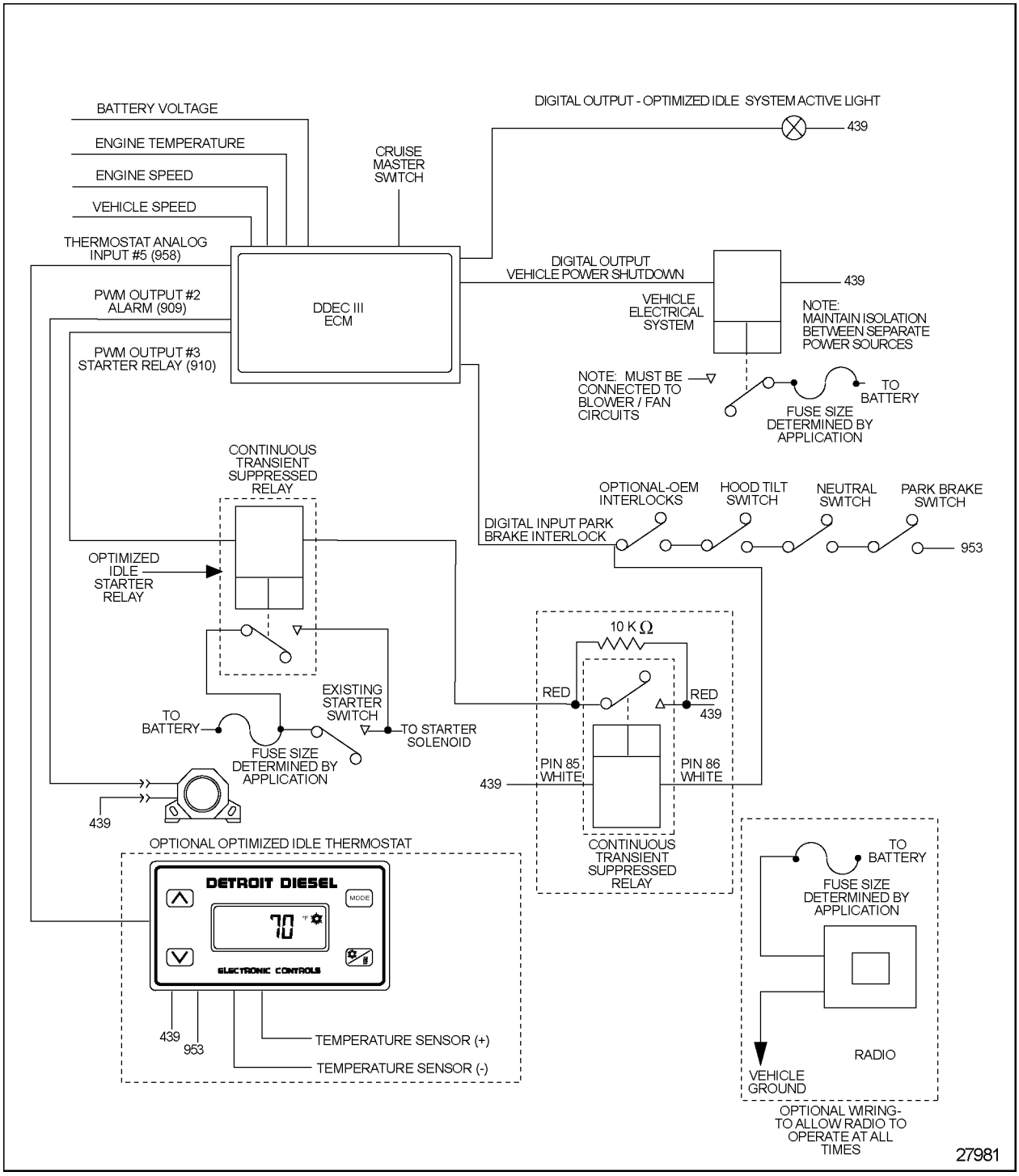

Figure 8-25 Optimized Idle System Overview

 Copyright © 2004 DETROIT DIESEL CORPORATION

4. Remove starter relay from relay block (Note: The *Check Engine Light* will illuminate once the relay is removed from the relay block, and a code 63 [PWM driver #3 Open Circuit] will be logged).
5. Measure the voltage between pin 85 of the relay block and a good ground and note the voltage.
   [a] If the voltage is *less than* 4 VDC, pin 85 is PWM # 3. Mark the wire as "PWM # 3" and mark the wire attached to pin 86 of the relay coil as "power".
   [b] If the voltage is *greater than* 4 VDC, pin 85 is the power side of the relay. Mark the wire as "power" and mark the wire attached to pin 86 of the relay coil as "PWM # 3".
6. Open the hood/cab.
7. Using the DDR (diagnostic data reader) select "Calibration Configuration," then select ECM inputs and outputs.
8. Arrow through the selections to find the pin position configured for "Park Brake Interlock."
9. Locate the appropriate wire in the 30-pin connector and label it "Park Brake Interlock."
10. Turn off the ignition.

CAUTION:

To avoid injury from battery explosion or contact with battery acid, work in a well-ventilated area, wear protective clothing, and avoid sparks or flames near the battery. If you come in contact with battery acid:
- ☐ **Flush your skin with water.**
- ☐ **Apply baking soda or lime to help neutralize the acid.**
- ☐ **Flush your eyes with water.**
- ☐ **Get medical attention immediately.**

11. Remove negative (-) battery cables.

(Rev. 2004) *All information subject to change without notice.*
6SE483 0401 Copyright © 2004 DETROIT DIESEL CORPORATION

8.6.7 Installation of Optimized Idle Starter Relay Harness Overlay Kit Components

Install optimized idle starter relay harness overlay kit components as follows:

1. Mount relay supplied in kit near Optimized Idle starter relay. See Figure 8-25.
2. Cut the wire labeled "power" from the previous section, refer to step 5.
3. Route both of the red wires from the overlay harness to the cut wire.
4. Cut off any excess wire and strip the insulation.
5. Splice one of the red wires to the one side of the cut wire.
6. Splice the other red wire to the other side of the cut wire.
7. Splice the pink wire (439) to DDEC wire 439.
8. Route the white wire from the overlay harness through the fire wall to the Optimized Idle park brake interlock input wire located in previous section, refer to step 9
9. Cut off any excess wire and strip the insulation from the white overlay harness wire.
10. Splice the white wire into the wire labeled "Digital Input" from the previous section, refer to step 9, approximately 6 inches from the ECM 30-pin connector.
11. Install conduit on the section of the white wire in the engine compartment.
12. Secure conduit.
13. Close hood/cab.
14. Replace the starter relay into the relay block.

 Copyright © 2004 DETROIT DIESEL CORPORATION

8.6.8 Verify Installation of Service Kit

Verify installation of service kit as follows:

⚠ CAUTION:

To avoid injury from battery explosion or contact with battery acid, work in a well-ventilated area, wear protective clothing, and avoid sparks or flames near the battery. If you come in contact with battery acid:
- ☐ **Flush your skin with water.**
- ☐ **Apply baking soda or lime to help neutralize the acid.**
- ☐ **Flush your eyes with water.**
- ☐ **Get medical attention immediately.**

1. Reconnect the battery negative (-) cables.
2. Turn ignition to ON position and wait through bulb check. If "Check Engine" light remains on, check the codes. If a code 63 (PWM driver #3 Open Circuit) is logged, refer to the troubleshooting procedure included below. Otherwise, refer to the *Detroit Diesel Single ECM Troubleshooting Manual* (6SE497).

⚠ CAUTION:

Diesel engine exhaust and some of its constituents are known to the State of California to cause cancer, birth defects, and other reproductive harm.
- ☐ **Always start and operate an engine in a well ventilated area.**
- ☐ **If operating an engine in an enclosed area, vent the exhaust to the outside.**
- ☐ **Do not modify or tamper with the exhaust system or emission control system.**

3. Start the engine.
4. Toggle the "Cruise" on/off switch from *off* to *on*. The "Optimized Idle" light should flash.
5. After the engine shuts down, turn the thermostat on by pressing any button. Press *up* or *down* arrow until the heat or cool symbol begins to flash.
   [a] If the engine starts, repairs are complete.
   [b] If the engine does not start, refer to the *Detroit Diesel Single ECM Troubleshooting Manual,* (6SE497).

(Rev. 2004) *All information subject to change without notice.*
6SE483 0401 Copyright © 2004 DETROIT DIESEL CORPORATION

8.7 DDEC II ENGINE SENSOR HARNESS

An improved vehicle engine sensor harness which virtually eliminates the potential for wire chafing damage has replaced the former harness on all Detroit Diesel Series 60 DDEC II engines. This change took effect approximately October 30, 1992. See Figure 8-26.

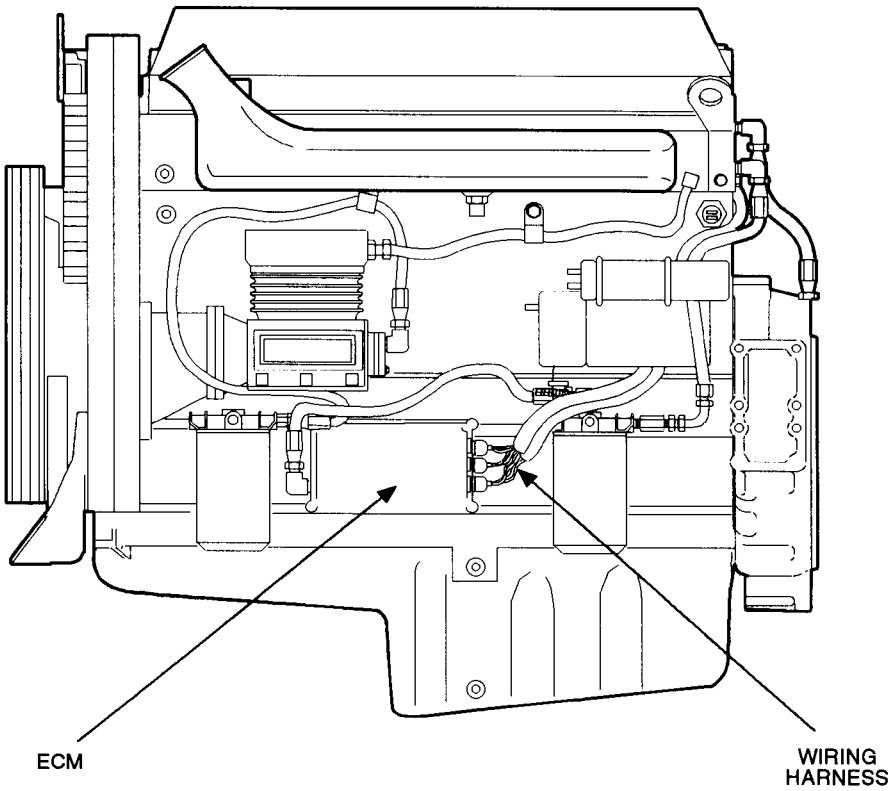

Figure 8-26 Typical DDEC II Engine Sensor Harness

 Copyright © 2004 DETROIT DIESEL CORPORATION

Detroit Diesel has found instances of chafing on the sensor connector harness (part number 8929468) used on DDEC II engines. The chafing can occur at the end of the plastic tee-coupling where the wires from the 30-way connector enter the coupling. See Figure 8-27. The chafing results from the absence of abrasion-resistant, convoluted tubing around the wires. Installing convoluted tubing is impractical due to the shortness of the wires at this point. With no abrasion-resistant material surrounding the wires, the rough plastic ridges inside the leg of the tee-coupling can cut through the wire coatings, exposing the wires to moisture and potential shorting. Shorting can result in the logging of false DDEC trouble codes.

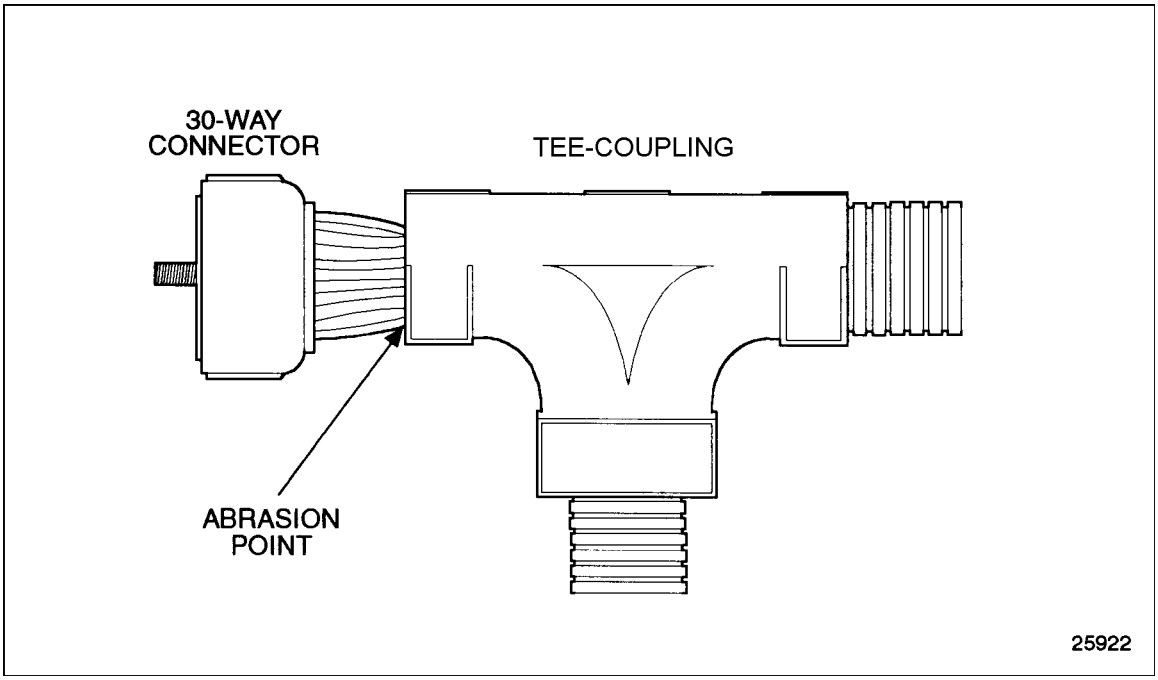

Figure 8-27 Former Engine Sensor Harness Showing Abrasion Point

(Rev. 2004) *All information subject to change without notice.*
6SE483 0401 Copyright © 2004 DETROIT DIESEL CORPORATION

To eliminate this concern, engine sensor harness 8929468 has been improved. The improved harness is identical to the former harness, except that abrasion-resistant tape is now wrapped around the short length of 30-way connector wires where they enter the tee-coupling. See Figure 8-28. This reduces the potential for wire damage caused by abrasion.

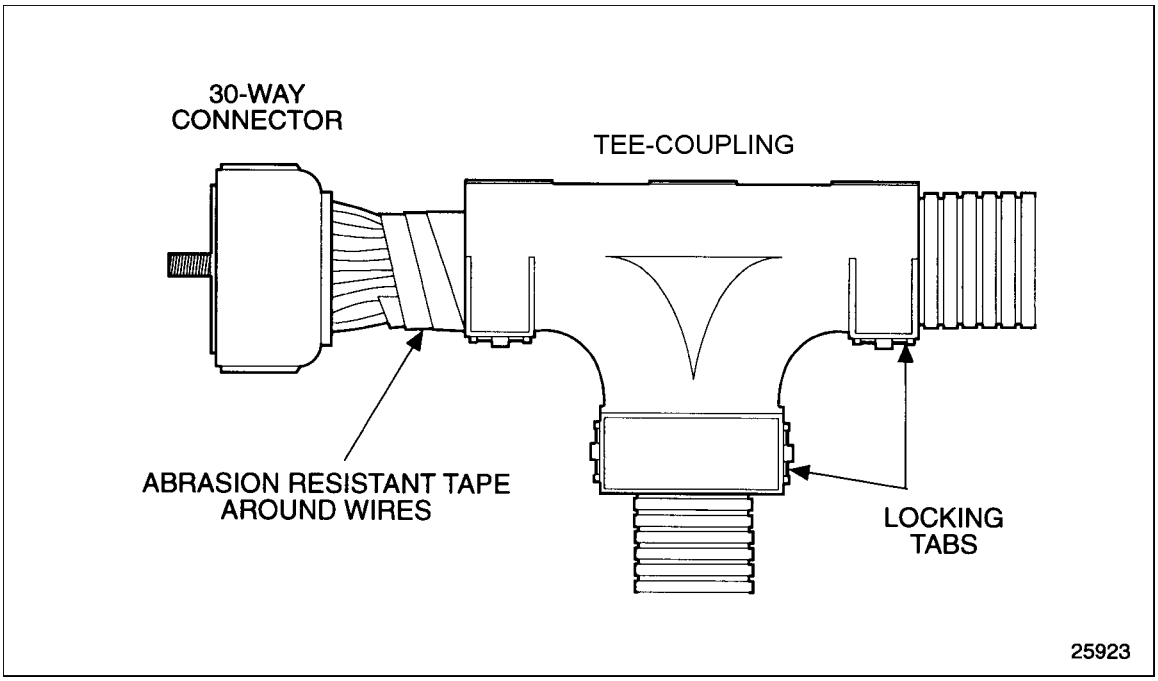

Figure 8-28 Improved Engine Sensor Harness with Abrasion-resistant Tape

8.7.1 Diagnostic Procedures

Basic mechanical checks should be made beforehand to verify that the problem is definitely related to the electrical portion of the system. If the basic mechanical checks fail to locate the problem, refer to the *Detroit Diesel Single ECM Troubleshooting Manual,* (6SE497). Start by reading the "Basic Knowledge Required" section before attempting to diagnosis electrical faults.

The DDEC II ECM provides the following electrical connections:

- ☐ One 6-way connection at the ECM for battery power and ground.
- ☐ Two 5-way connections at the ECM for the injectors.
- ☐ A 30-way connection at the ECM for all engine electrical connections. (Engine Sensor Harness)
- ☐ A 30-way connection at the ECM for all cab electrical connections. (Vehicle Interface Harness)

 Copyright © 2004 DETROIT DIESEL CORPORATION

8.7.2 Repair and Replacement of DDEC II Engine Sensor Harnesses

To determine if repair is possible or replacement is necessary, perform the following procedure. See Figure 8-29.

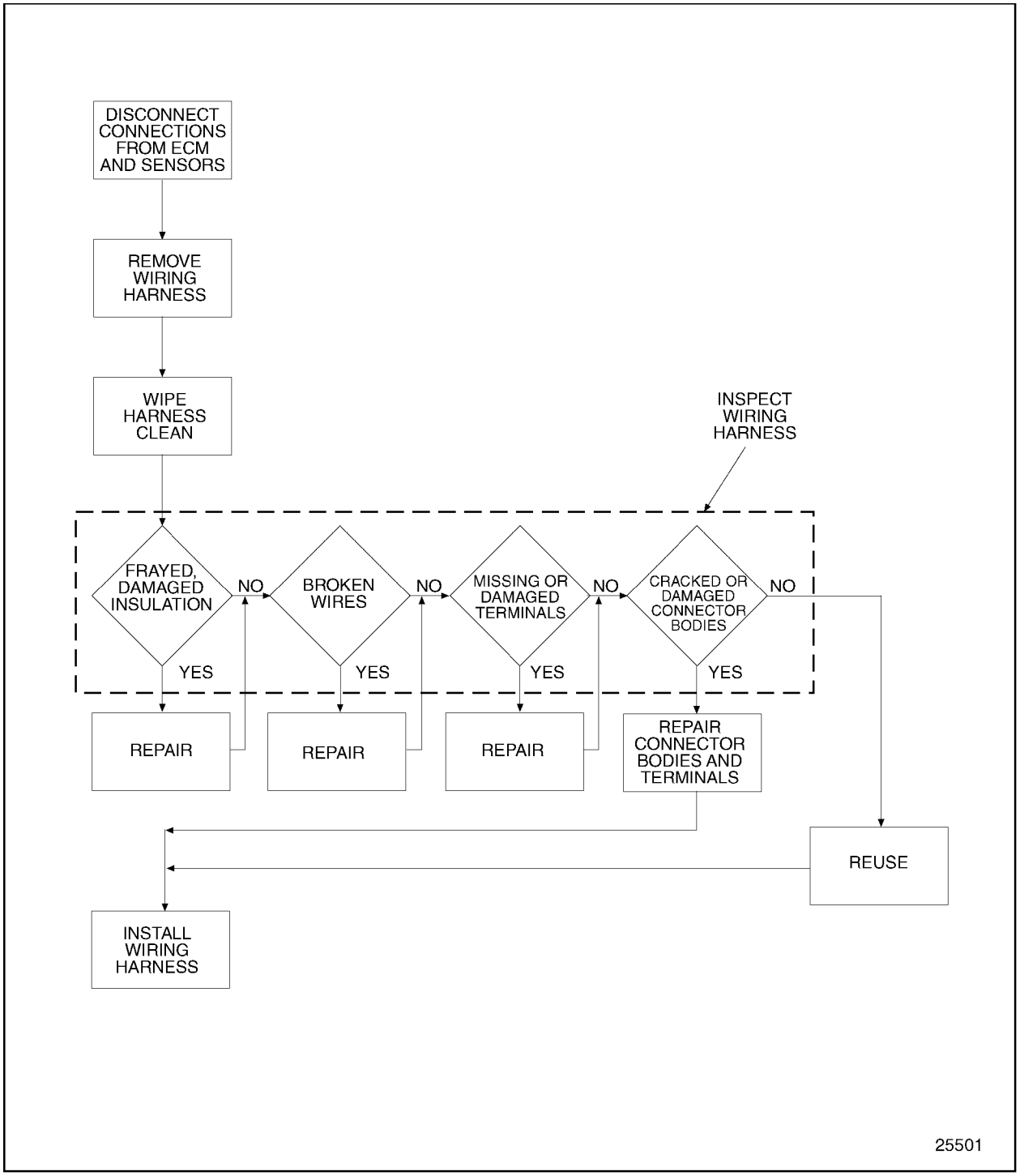

Figure 8-29 Flowchart for Repair or Replacement of Engine Sensor Harness

(Rev. 2004) *All information subject to change without notice.*
6SE483 0401 Copyright © 2004 DETROIT DIESEL CORPORATION

8.7.3 Removal of DDEC II Engine Sensor Harnesses

Remove the DDEC II engine sensor harness as follows:

1. Disengage the locking tang on each individual sensor connector body. See Figure 8-30.

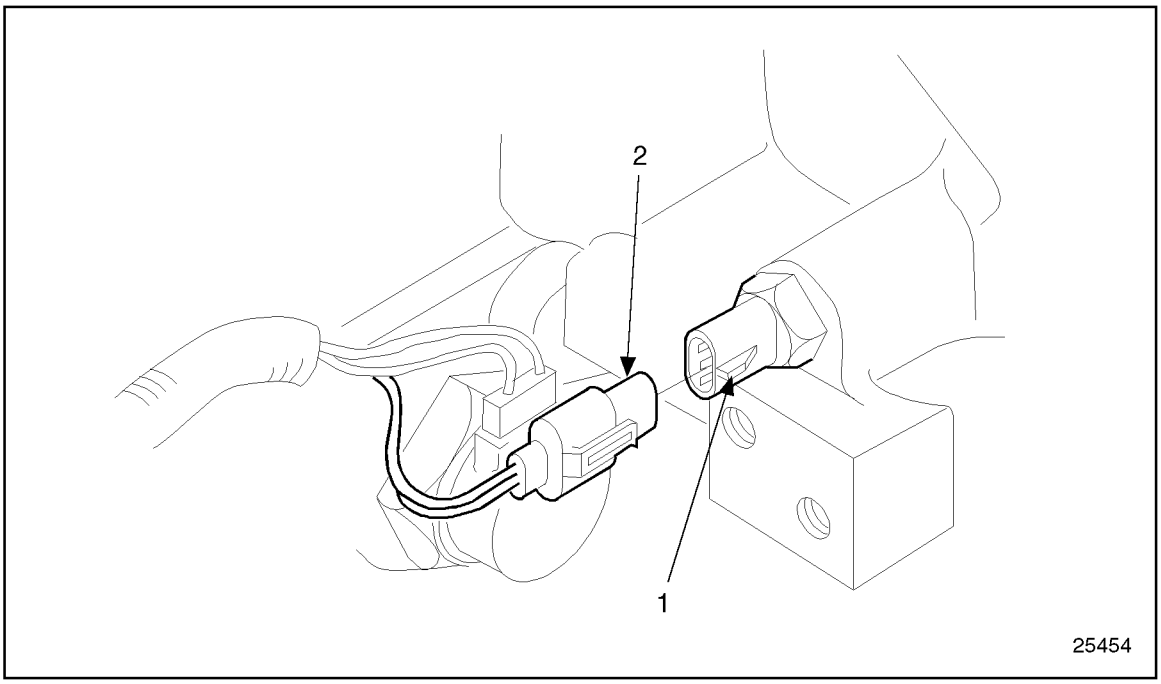

1. Locking Tang
2. Connecting Body

Figure 8-30 Typical Sensor Connector Locking Tang

2. Grasp the connector body and gently pull it from the sensor.
3. Remove the five bolts securing the metal harness clips to the engine.
4. Remove the 30-pin connector from the ECM by loosening the connector attaching bolt. Carefully pull the connector from the ECM and remove the harness from the engine.

 Copyright © 2004 DETROIT DIESEL CORPORATION

8.7.3.1 Inspection of DDEC II Engine Sensor Harness

Inspect the engine sensor harness for the following damage:

- ☐ Frayed or damaged insulation, repair as necessary. Refer to section 8.12.2.
- ☐ Broken wires, repair as necessary. Refer to section 8.12.5.
- ☐ Missing or damaged terminals, repair as necessary. Refer to section 8.9.2.
- ☐ Cracked or damaged connector bodies require removal and replacement. Refer to section 8.9.2 and refer to section 8.9.3.

If the 30-way connector wires do not have a protective covering at the tee, Detroit Diesel recommends wrapping abrasion-resistant tape around the 30-way connector wires where the tee-coupling end clamps onto them, using the following procedure:

1. With the harness on or off the engine, open the plastic tee-coupling by disengaging the locking tabs (two on each side). See Figure 8-28. Remove the coupling.
2. Apply two or three wraps of abrasion-resistant tape such as Polyken 266 Black Tape*, or equivalent, around the 30-way connector wires where the tee-coupling clamps onto them. See Figure 8-28. This reduces the potential for wire damage caused by abrasion.
3. Reinstall the tee-coupling on the harness and check to make sure the tape extends a minimum of 1/2 inch outside the arm of the tee. Add an additional wrap of tape, if necessary.
4. Secure the tee-coupling in place by engaging the locking tabs.

NOTE:
* Polyken 267 Black Tape is available from the following supplier in a 1 in. (25.4 mm) wide, 100 foot (30.5 m) long roll: Eliot Tape, 1902 Rochester Industrial Highway, Rochester Hills, MI 48309 Phone: (248) 652-4010 Fax: (248) 652-6591

8.7.4 Installation of DDEC II Engine Sensor Harness

Install the DDEC II engine sensor harness as follows:

1. Install the 30-pin connector to the ECM, and torque the connector body attaching bolt to 0.79-1.47 N·m (7-13 lb·in.) torque.
2. If removal of the harness attaching clips from the engine is required, unscrew and remove them from the cylinder block by rotating in a counterclockwise direction.
3. Install the bolts securing the harness clips to the engine. Torque to 30-38 N·m (22-28 lb·ft).

NOTE:
To ensure proper engine sensor harness support, all missing and damaged harness clips must be replaced.

4. Carefully plug the two-pin and three-pin harness connectors into the appropriate sensors.

(Rev. 2004) *All information subject to change without notice.*
6SE483 0401 Copyright © 2004 DETROIT DIESEL CORPORATION

8.8 METRI-PACK 150 SERIES CONNECTORS

Metri-Pack 150 series connectors are "pull-to-seat" connectors. Each wire must be pushed through the connector prior to crimping the terminal. Cable seals are inserted into the shell of the connector and hold many wires.

8.8.1 Repair and Replacement of Metri-Pack 150 Series Connectors

Repairs to Metri-Pack 150 series connectors are not possible. Remove the defective or damaged connector and replace. Refer to section 8.8.2.

8.8.2 Removal of Metri-Pack 150 Series Connectors

A tang on the terminal locks into a tab molded into the plastic connector to retain the cable assembly. Remove and repair Metri-Pack 150 terminals using the following instructions.

1. Insert the removal tool into the cavity of the connector, placing the tip of the tool between the locking tang of the terminal and the wall of the cavity. See Figure 8-31.

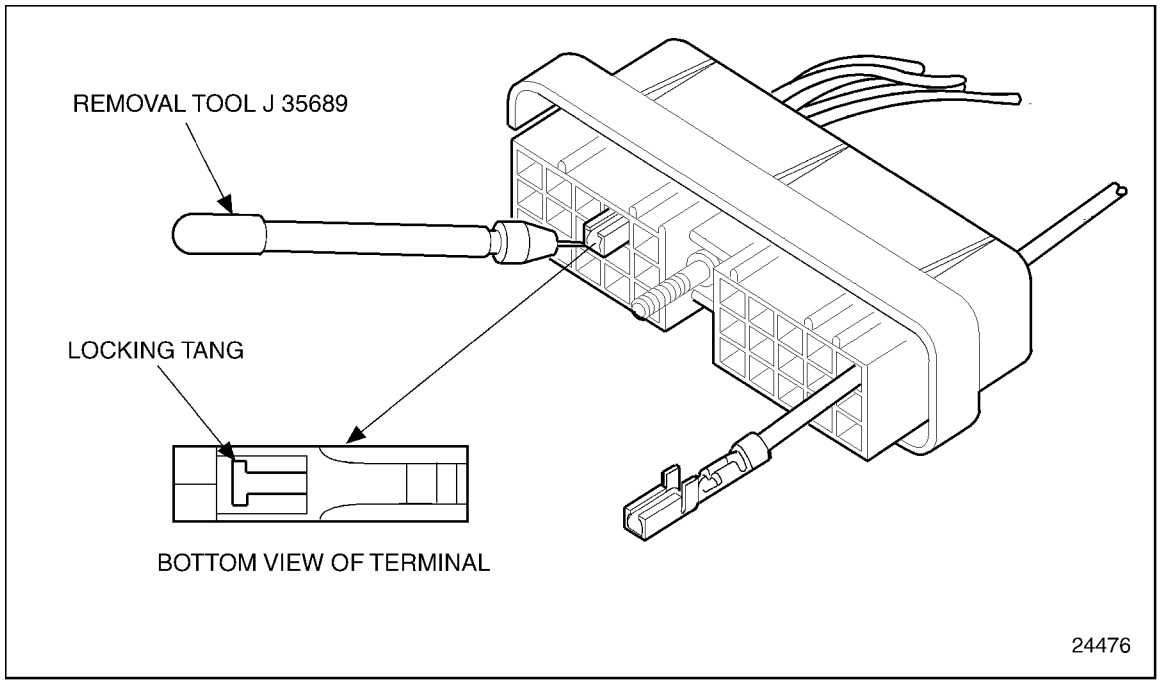

Figure 8-31 Terminal Removal

2. Depress the tang of the terminal to release it from the connector.
3. Push the cable forward through the terminal until the complete crimp is exposed.
4. Cut the cable immediately behind the damaged terminal to repair it.
5. Follow the installation instructions for crimping the terminal and inserting it into the connector.

 Copyright © 2004 DETROIT DIESEL CORPORATION

8.8.3 Installation of Metri-Pack 150 Series Connectors

Metri-Pack 150 connectors are of the "pull-to-seat" type. Each cable must be pushed through the seal and connector prior to crimping the terminal. Cable seals are inserted into the shell of the connector and hold many wires. Use the following instructions for terminal installation:

1. Push the cable through the correct cavity of the seal and connector. See Figure 8-32.

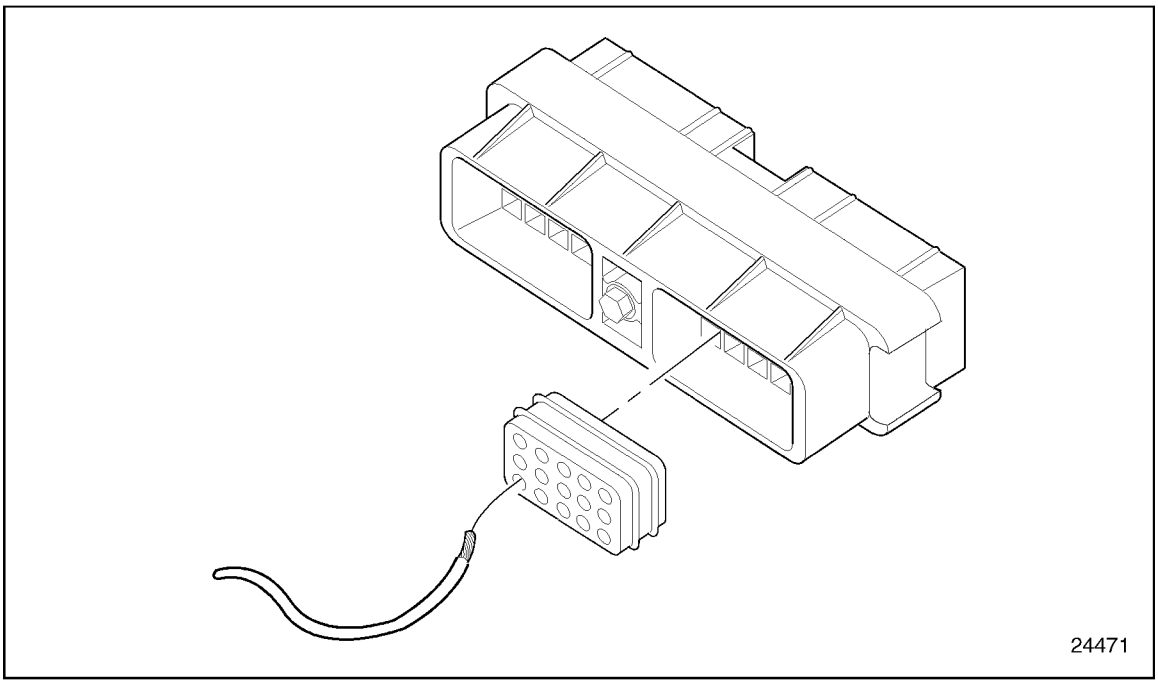

Figure 8-32 Inserting Wire Connector

2. Strip the end of the cable using wire strippers to leave 5.0 mm (0.20 in.) (± 0.5 mm ± 0.02 in.) of bare conductor.
3. Squeeze the handles of the crimping tool together firmly to cause the jaws to automatically open.
4. Hold the "wire side" facing you.

(Rev. 2004) *All information subject to change without notice.*
6SE483 0401 Copyright © 2004 DETROIT DIESEL CORPORATION

5. Insert the terminal until the wire attaching portion of the terminal rests on the 20-22 anvil. Ensure the wire core wings and the insulation wings of the terminal are pointing toward the upper jaw of the crimping tool. See Figure 8-33.

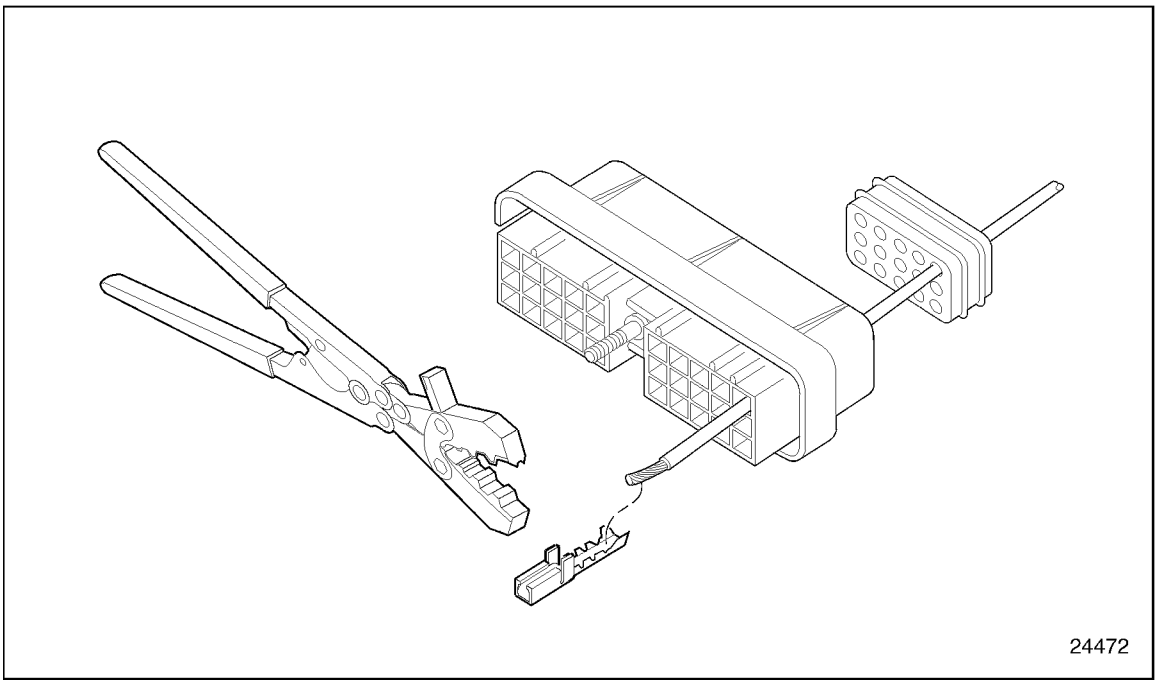

Figure 8-33 Terminal and Crimping Tool Position

 Copyright © 2004 DETROIT DIESEL CORPORATION

6. Insert the cable into the terminal until the stripped portion is positioned in the wire core wings, and the insulation portion ends just forward of the insulation wings. See Figure 8-34.

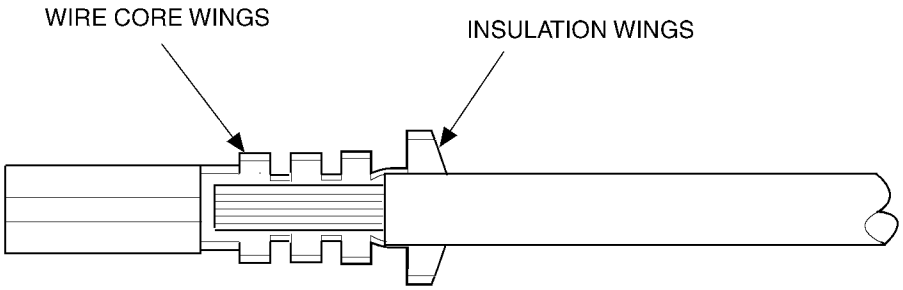

Figure 8-34 Cable to Terminal Alignment

(Rev. 2004) *All information subject to change without notice.*
6SE483 0401 Copyright © 2004 DETROIT DIESEL CORPORATION

7. Compress the handles of the crimping tool until the ratchet automatically releases and the crimp is complete.

NOTE:
For faster, more efficient crimping operation, a bracket or bench rest may be used to cradle one handle of the tool. The operator can apply the terminals by grasping and actuating only one handle of the tool. See Figure 8-35.

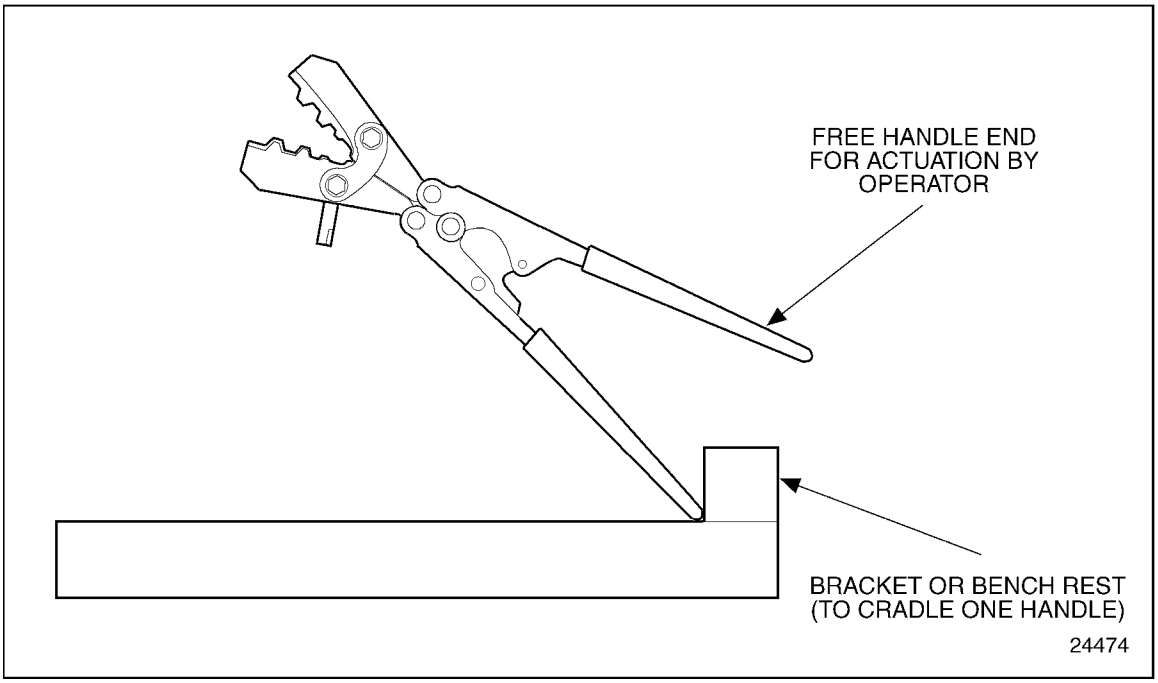

Figure 8-35 Crimping Operation

8. Release the crimping tool with the lock lever located between the handles, in case of jamming.
9. Align the locking tang of the terminal with the lettered side of the connector.

 Copyright © 2004 DETROIT DIESEL CORPORATION

10. Pull the cable back through the connector until a click is heard. See Figure 8-36. Position the seal into the connector.

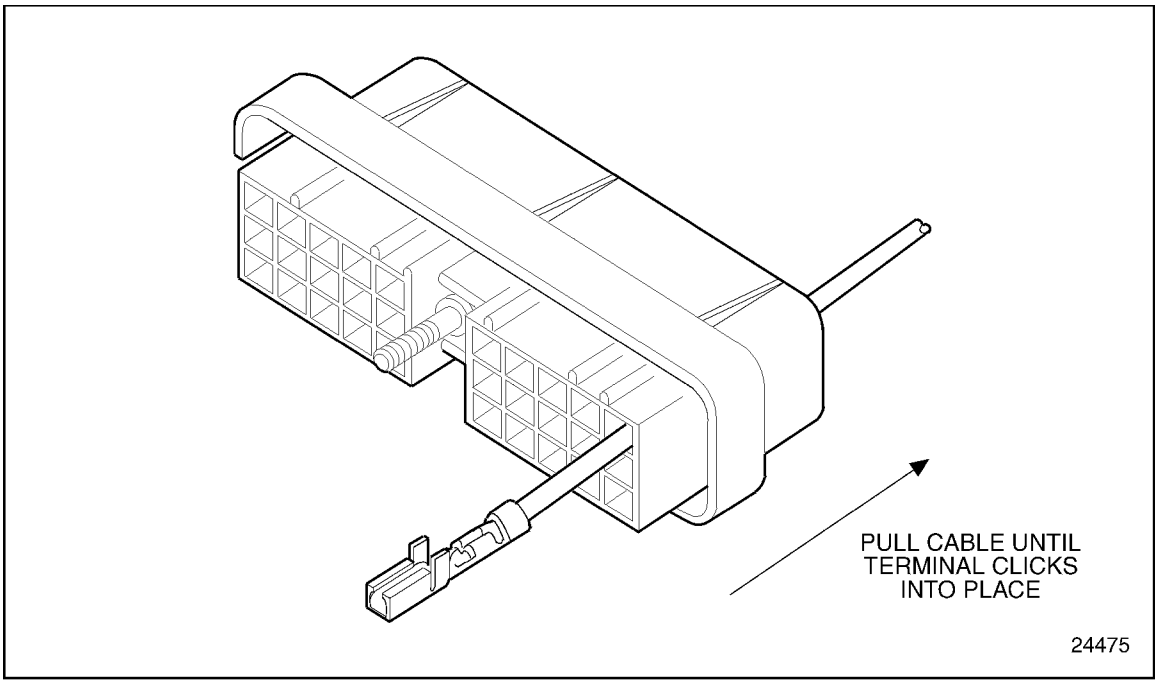

Figure 8-36 Pulling the Terminal to Seat

NOTE:
For ECM 30-pin connectors, put locking tang opposite lettered side.

(Rev. 2004) *All information subject to change without notice.*
6SE483 0401 Copyright © 2004 DETROIT DIESEL CORPORATION

8.9 MICRO-PACK SERIES CONNECTORS

Micro-Pack series connectors are push-to-seat connectors. Each wire must be crimped into the terminal before it is inserted into the connector. All terminals require 18 gage GXL wire.

8.9.1 Repair and Replacement of Micro-Pack Connectors

Repairs to Micro-Pack connectors are not possible. Remove the defective or damaged connector and replace. Refer to section 8.9.2.

8.9.2 Removal of Micro-Pack Connectors

To remove the connector:

1. Cut the cable immediately behind the damaged terminal.
2. Install a fresh connector. Refer to section 8.9.3.

8.9.3 Installation of Micro-Pack Connectors

Micro-Pack series connectors are of the push-to-seat design. The terminal is crimped on the wire before it is inserted into the connector.

Use the following instructions for terminal installation:

NOTICE:
The cable should be stripped of insulation *before* it is inserted through the connector body.

1. Strip the end of the cable using wire strippers to leave 5.0 mm (0.20 in.) (± 0.5 mm ± 0.02 in.) of bare conductor.
2. Insert the terminal into the locating hole of the crimping tool. Check the gage of the cable to locate the proper hole.

 Copyright © 2004 DETROIT DIESEL CORPORATION

3. Insert the cable into the terminal until the stripped portion is positioned in the cable core wings, and the insulated portion of the cable is in the insulation wings. See Figure 8-37.

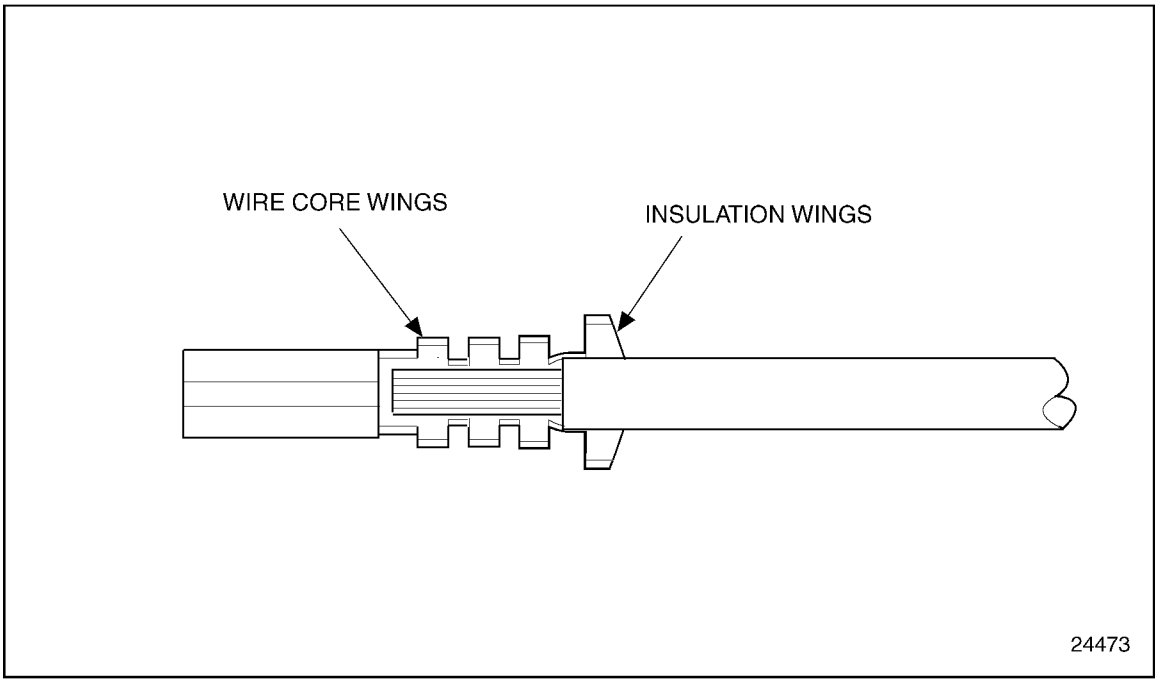

Figure 8-37 Cable to Terminal Alignment

4. Compress the handles of the crimping tool until the crimp is complete.

NOTE:
For faster, more efficient crimping operation, a bracket or bench rest may be used to cradle one handle of the tool. The operator can then apply the terminals by grasping and actuating only one handle of the tool.

5. Release the crimping tool with the lock lever located between the handles, in case of jamming.
6. Push the crimped terminal into the connector until it clicks into place. Gently tug on the cable to make sure it is secure.

(Rev. 2004) *All information subject to change without notice.*
6SE483 0401 Copyright © 2004 DETROIT DIESEL CORPORATION

8.10 WEATHER PACK AND METRI-PACK 280 SERIES CONNECTORS

Weather Pack and Metri-Pack 280 series connectors are push-to-seat. The terminal is crimped onto each wire before it is inserted into the connector. A cable seal is crimped on each wire at the same time the terminal is crimped onto the wire. Weather Pack connectors use a secondary lock on both male and female connector bodies and the lock snaps into place over the cable seals after installation. Some Metri-Pack connectors have secondary locks as well.

8.10.1 Repair and Replacement of Weather Pack and Metri-Pack 280 Series Connectors

Repairs to Weather Pack and Metri-Pack 280 series connectors are not possible. Remove the defective or damaged connector and replace. Refer to section 8.10.2.

8.10.2 Removal of Weather Pack and Metri-Pack 280 Series Connectors

Two locking tangs are used on the terminals to secure them to the connector body. Use the following instructions for removing terminals from the connector body.

1. Grasp the cable to be removed and push the terminal to the forward position.
2. Insert the removal tool straight into the front of the connector cavity until it rests on the cavity shoulder. See Figure 8-38.

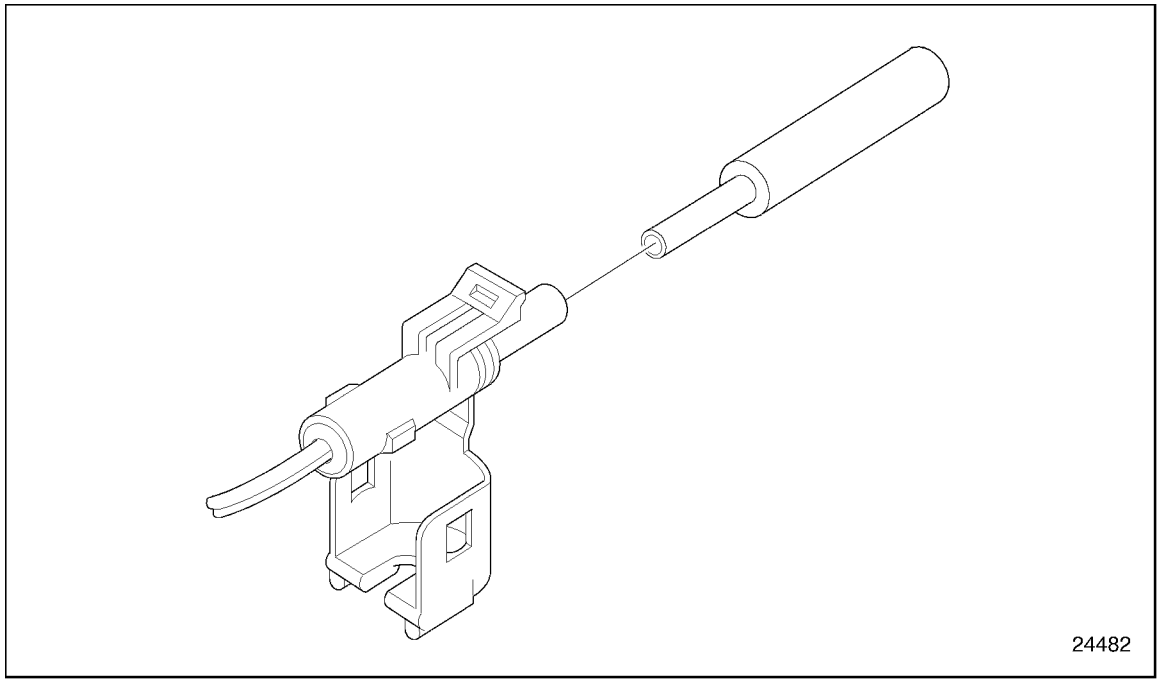

Figure 8-38 Removal Tool Procedure

3. Grasp the cable and push it forward through the connector cavity into the tool while holding the tool securely in place. The tool will depress the locking tangs of the terminal.

 Copyright © 2004 DETROIT DIESEL CORPORATION

4. Pull the cable rearward (back through the connector).
5. Remove the tool from the connector cavity.
6. Cut the wire immediately behind the cable seal.
7. Follow the installation instructions for crimping the terminal and inserting it into the connector.

8.10.3 Installation of Weather Pack and Metri-Pack 280 Series Connectors

Use the following instructions for terminal installation:

1. Slip the cable seal onto the wire.
2. Strip the end of the cable using strippers to leave 5.0 mm 0.20 in. (± 0.5 ± 0.02 in.) of bare connector.
3. See Figure 8-39 to position the cable seal.

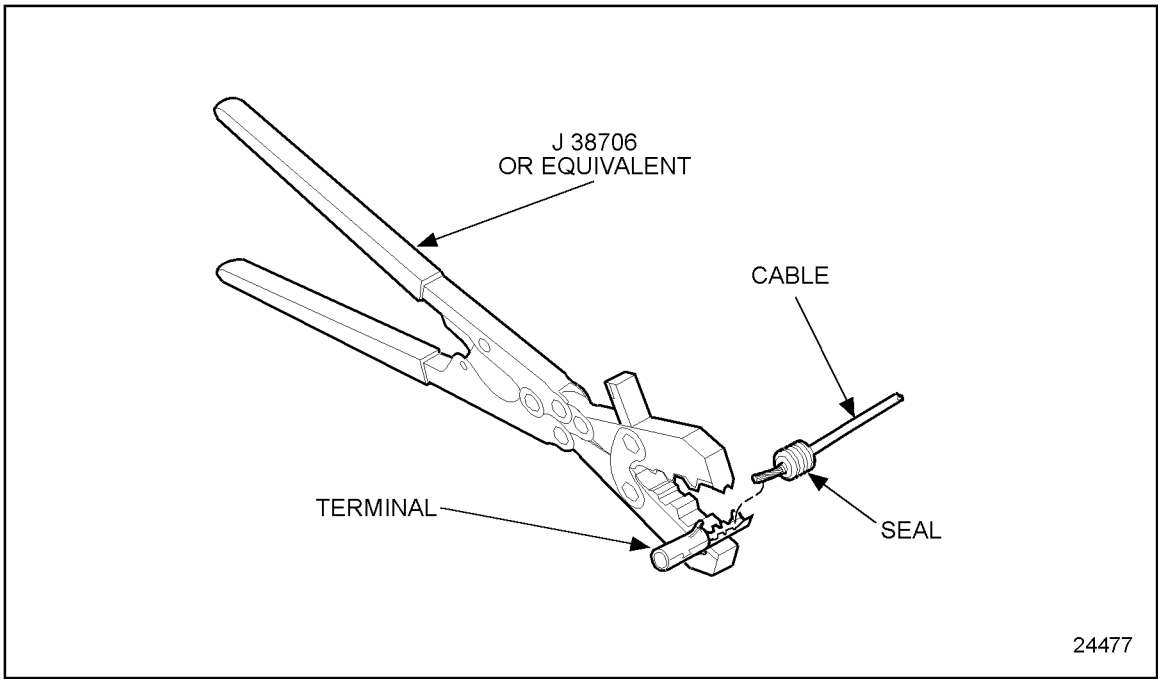

Figure 8-39 Terminal Position

4. Insert the terminal into the locating hole of the crimping tool using the proper hole according to the gauge of the cable to be used. See Figure 8-40.
5. Insert the cable into the terminal until the stripped portion is positioned in the cable core wings, and the seal and insulated portion of the cable are in the insulation wings. See Figure 8-40.

(Rev. 2004) *All information subject to change without notice.*
6SE483 0401 Copyright © 2004 DETROIT DIESEL CORPORATION

6. Compress the handles of the crimping tool until the ratchet automatically releases and the crimp is complete. See Figure 8-40 for a properly crimped terminal.

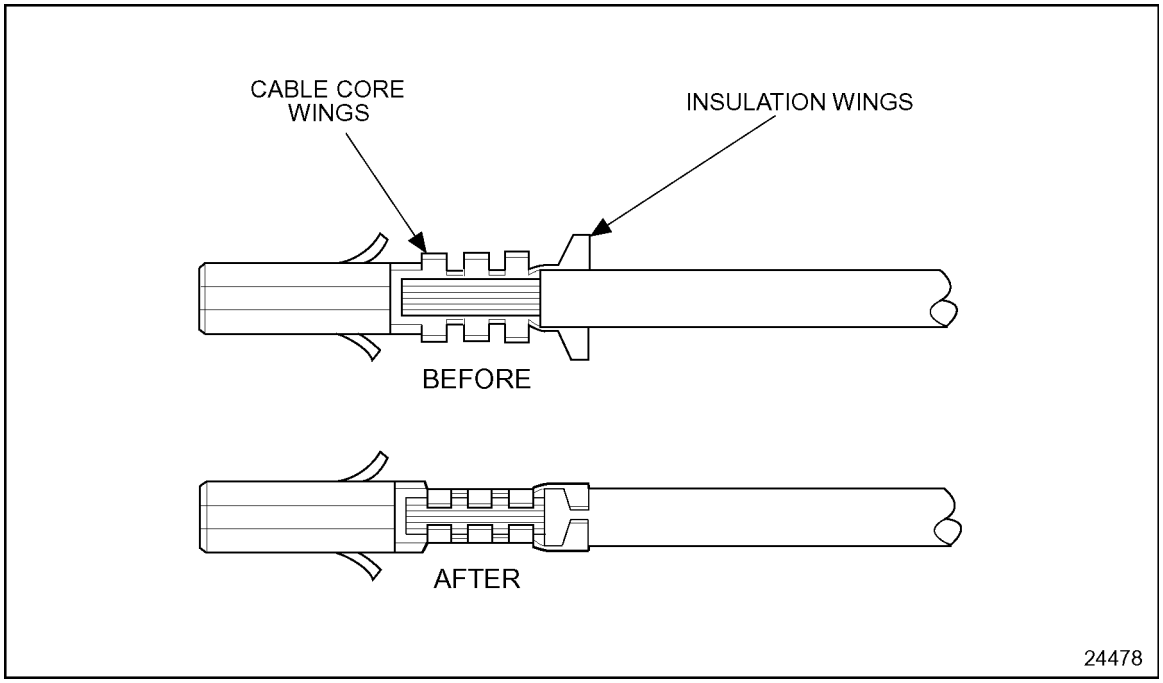

Figure 8-40 Cable and Terminal Position Before and After Crimping

7. Release the crimping tool with the lock lever located between the handles, in case of jamming.

 Copyright © 2004 DETROIT DIESEL CORPORATION

8. Push the crimped terminal into the connector until it clicks into place. Gently tug on the cable to make sure it is secure. See Figure 8-41.

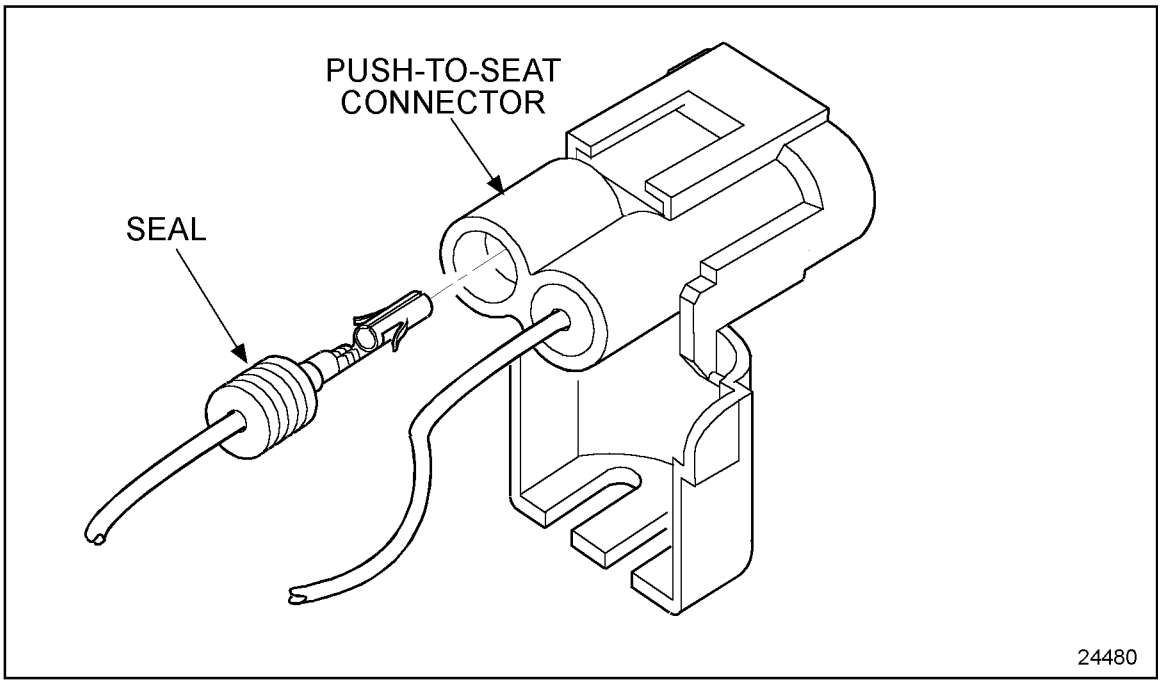

Figure 8-41 Inserting Terminal in Connector

(Rev. 2004) *All information subject to change without notice.*
6SE483 0401 Copyright © 2004 DETROIT DIESEL CORPORATION

8.11 CONNECTOR TOOLS

Crimp tools and connector removing tools can be purchased from Kent-Moore:

The tools listed in Table 8-4 are used with the connectors associated with the DDEC III/IV Systems.

Connector	Tool	Kent-Moore Part No.
Micro-Pack	Crimp Tool	J 38125-6
Micro-Pack	Removal Tool	J 38125-12
Weather-Pack	Removal Tool	J 36400-5
Metri-Pack 150 Series	Crimp Tool	J 35123
Metri-Pack 150 Series	Removal Tool	J 35689
Metri-Pack 280 Series	Crimp Tool	J 38125-6
Metri-Pack 280 Series	Removal Tool	J 33095

Table 8-4 Terminal Replacement Tools

 Copyright © 2004 DETROIT DIESEL CORPORATION

8.12 SPLICING GUIDELINES

The following are guidelines which may be used for splices. The methods described are not the only acceptable methods. Any method should produce a high quality, tight splice with durable insulation which can be expected to last the life of the vehicle.

The selection of crimpers and splice connectors is optional. Select a high quality crimper equivalent to Kent-Moore tool J 38706 and commercially available splice clips.

8.12.1 Splicing Tools

The following is a list of tools required for splicing wires:

- ☐ Soldering iron
- ☐ Rosin core solder
- ☐ Wire strippers
- ☐ Heat shrink tubing
- ☐ Splice clips
- ☐ Crimp pliers

8.12.2 Straight Leads

To splice straight leads:

1. Locate broken wire
2. Remove insulation as required; ensure exposed wire is clean and not corroded.
3. Slide a sleeve of shrink wrap on the wire long enough to cover the splice and overlap the wire insulation, about 1/4 inch on both sides.
4. Insert one wire into splice clip (P/N: 0597428 or equivalent) and crimp.

(Rev. 2004) *All information subject to change without notice.*
6SE483 0401 Copyright © 2004 DETROIT DIESEL CORPORATION

5. Insert the other wire into splice clip and crimp. See Figure 8-42.

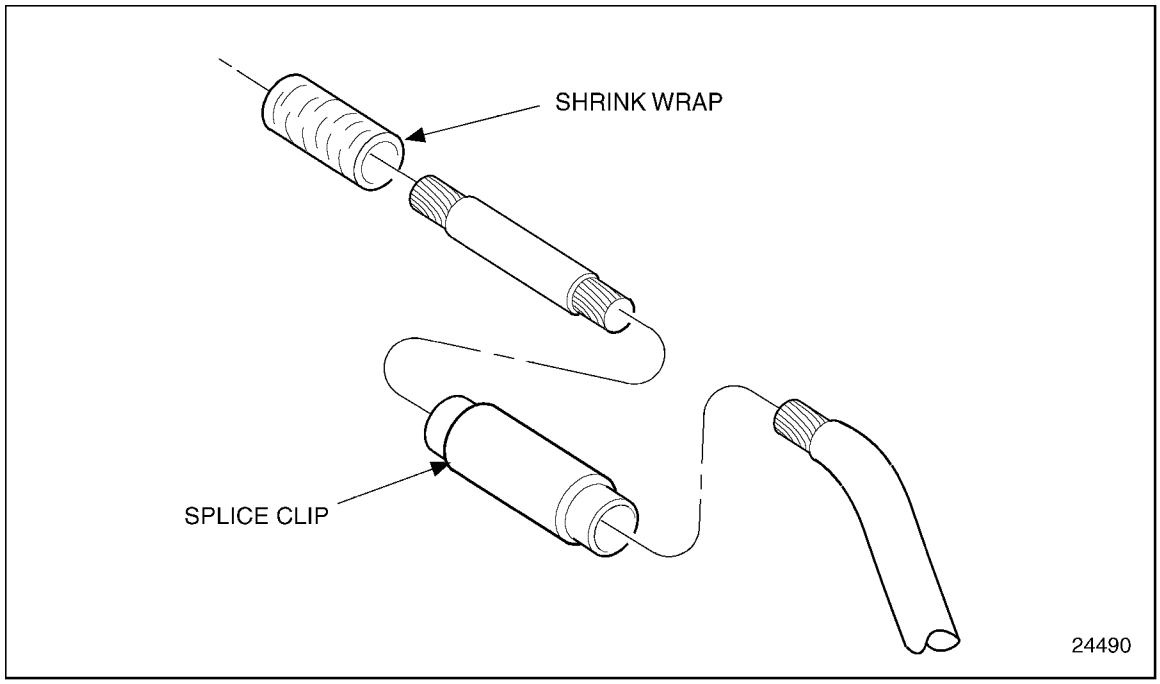

Figure 8-42 Spliced Wire

8.12.3 Solder

Soldering splice connectors is optional. To solder splice connectors:

1. You *must* use rosin core solder.
2. Check the exposed wire before the splice is crimped in its connector. The exposed wire *must* be clean before the splice is crimped.
3. Use a suitable electronic soldering iron to heat the wires. Apply the solder to the heated wire (not to the soldering iron), allowing sufficient solder flow into the splice joint.
4. Pull on connection to assure crimping and soldering integrity.

 Copyright © 2004 DETROIT DIESEL CORPORATION

8.12.4 Shrink Wrap

Shrink wrap is required. Alpha FIT-300, Raychem TAT-125 or any equivalent heat shrink, dual wall, epoxy encapsulating adhesive polyolefin is required. For information on this product contact the companies listed in Table 8-5.

Alpha Wire Corporation	Raychem Corporation, Thermofit Division
711 Lidgerwood Ave.	300 Constitution Drive
P.O. Box 711	Building B
Elizabeth, New Jersey 07207-0711	Menlo Park, CA 94025
1-800-522-5742	415-361-3860

Table 8-5 Addresses

To heat shrink wrap a splice:

1. Select the correct diameter to allow a tight wrap when heated. The heat shrink wrap *must* be long enough to overlap the wire insulation about 6.35 mm (0.25 in.) on both sides of the splice.
2. Heat the shrink wrap with a heat gun; do not concentrate the heat in one location, but play the heat over the entire length of shrink wrap until the joint is complete.

(Rev. 2004) *All information subject to change without notice.*
6SE483 0401 Copyright © 2004 DETROIT DIESEL CORPORATION

8.12.5 Multiple Broken Wires

To splice multiple broken wires:

1. Stagger the position of each splice. See Figure 8-43.
2. You *must* stagger positions to prevent a large bulge in the harness and to prevent the wires from chafing against each other.

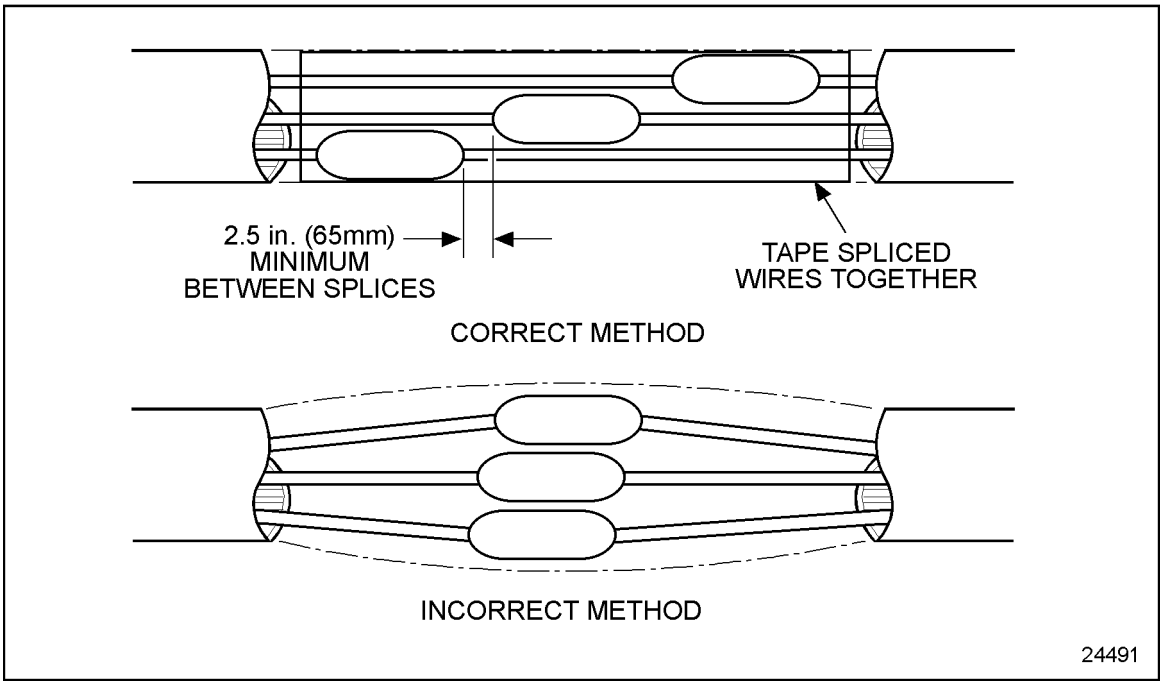

Figure 8-43 Multiple Splices

 Copyright © 2004 DETROIT DIESEL CORPORATION

8.12.6 Three-Wire Splice

Three-way splice connectors are commercially available to accommodate three-wire splices. The technique is the same as a single butt splice connector. See Figure 8-44.

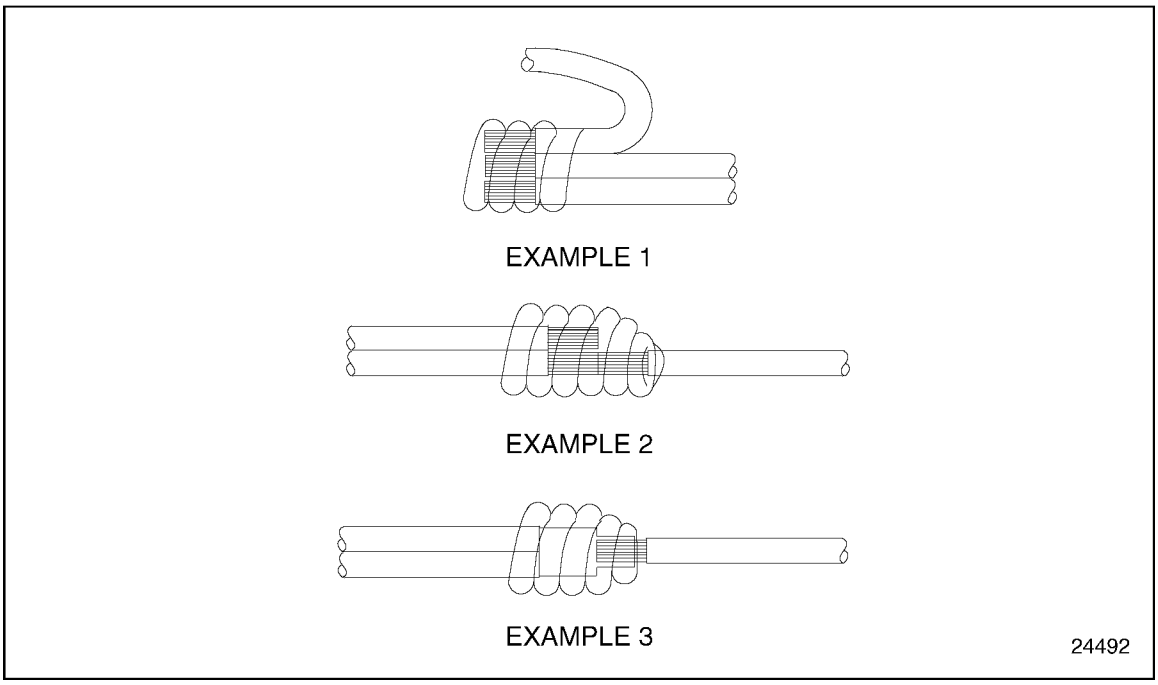

Figure 8-44 Three-Way Splice

(Rev. 2004) *All information subject to change without notice.*
6SE483 0401 Copyright © 2004 DETROIT DIESEL CORPORATION

8.A ADDITIONAL INFORMATION

Description **Page**

SPECIFICATIONS 8-76
Torque Specification Exceptions - Fasteners 8-76

 Copyright © 2004 DETROIT DIESEL CORPORATION

SPECIFICATIONS

This section contains the exceptions to the fastener torque specifications.

Torque Specification Exceptions - Fasteners

The proper bolt and nut torque is dependent on its size. The proper torque for metric nuts and bolts are listed in Table 8 in the "General Information". Standard (nonmetric) nut and bolt torque specifications are listed in Table 7 in the "General Information" section. The exceptions to this rule are listed in Table 8-6.

Fastener	Torque, N · m	Torque, lb · ft
Bolt, Alternator Mounting Bracket	58-73	43-54
Nut, Drive Pulley	95-108	70-80
Bolt, Alternator-to-Mounting Bracket	81-95	60-70

Table 8-6 Exceptions - Metric Fastener Torque Specifications

(Rev. 2004) *All information subject to change without notice.*
6SE483 0401 Copyright © 2004 DETROIT DIESEL CORPORATION

9 POWER TAKE-OFF

Section **Page**

9.1 FRONT MOUNTED POWER TAKE-OFF 9-3

9.2 REAR ENGINE POWER TAKE-OFF (REPTO) ASSEMBLY 9-8

 Copyright © 2004 DETROIT DIESEL CORPORATION

9.1 FRONT MOUNTED POWER TAKE-OFF

Detroit Diesel Corporation (DDC) has a front mounted PTO, for use on the Series 60 vehicle engines. See Figure 9-1.

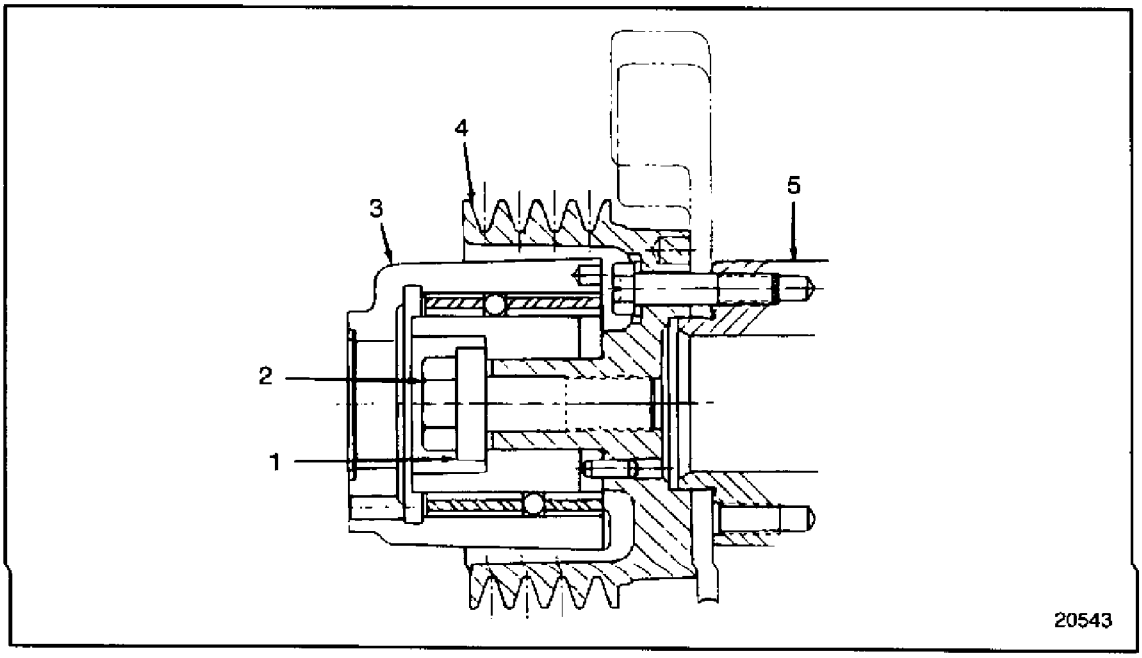

1. Retainer
2. Bolt
3. Hub Assembly
4. Pulley Assembly
5. Crankshaft

Figure 9-1 Front Mounted Power Take-off Components

 Copyright © 2004 DETROIT DIESEL CORPORATION

This PTO is available in two different models, adaptable to Spicer 1310 and Spicer 1350 drive shafts depending on the torque and horsepower requirements. Maximum torque and horsepower for the two PTO assemblies are listed in Table 9-1.

Power Take-off Models	Engine Speed	Torque	Horsepower
Spicer 1310	1800 r/min	162.7 N·m (120 lb·ft)	30.6 kW (41 hp)
Spicer 1310	2100 r/min	158.7 N·m (117 lb·ft)	29.8 kW (40 hp)
Spicer 1350	1800 r/min	261.7 N·m (193 lb·ft)	57.4 kW (77 hp)
Spicer 1350	2100 r/min	253.6 N·m (187 lb·ft)	56.0 kW (75 hp)

Table 9-1 Torque and Horsepower for the Front Mounted Power Take-off Assemblies

NOTE:
These torque and horsepower values are the maximum available taken at three degrees shaft angle. Any increase in the shaft angle has a direct negative effect on the amount of available torque and horsepower, as well as shaft life.

Also, any new application must have a "Torsional Analysis" performed by the DDC Engineering Department.

The PTO drive shaft must be purchased through Spicer Universal Joint Division, Dana Corporation.

If a PTO adaptor kit is to be installed on an engine that has been in service, it will be necessary to remove the standard pulley configuration and replace it with one of the PTO adaptor kits.

Perform the following steps to install the new PTO assembly:

1. Remove the six bolts that retain the standard crankshaft pulley: refer to section 1.13.2.
2. Install the new PTO pulley; refer to section 1.13.3. Use the new bolts and washer provided with the PTO adaptor kit.
3. Install the new hub insulator assembly inside the new pulley assembly ensuring that the slot on the backside of the hub fits over the dowel in the pulley.
4. Install the new 1 in. - 14 x 3.50 in. long bolt and retainer after coating the bolt threads and underside of the bolt head with International Compound #2®. Torque the bolt to 610 N·m (450 lb·ft).

(Rev. 2004) *All information subject to change without notice.*
6SE483 0401 Copyright © 2004 DETROIT DIESEL CORPORATION

9.1.1 Repair and Replacement for the Front Mounted Power Take-off Assembly

The front mounted power take-off assembly is a nonserviceable component; tag for remanufacture.

9.1.2 Removal of Front Mounted Power Take-off

Perform the following steps to remove the PTO assembly:

1. Remove the inspection plug in the bottom of the flywheel housing and install the J 36375–A ; see Figure 9-2.

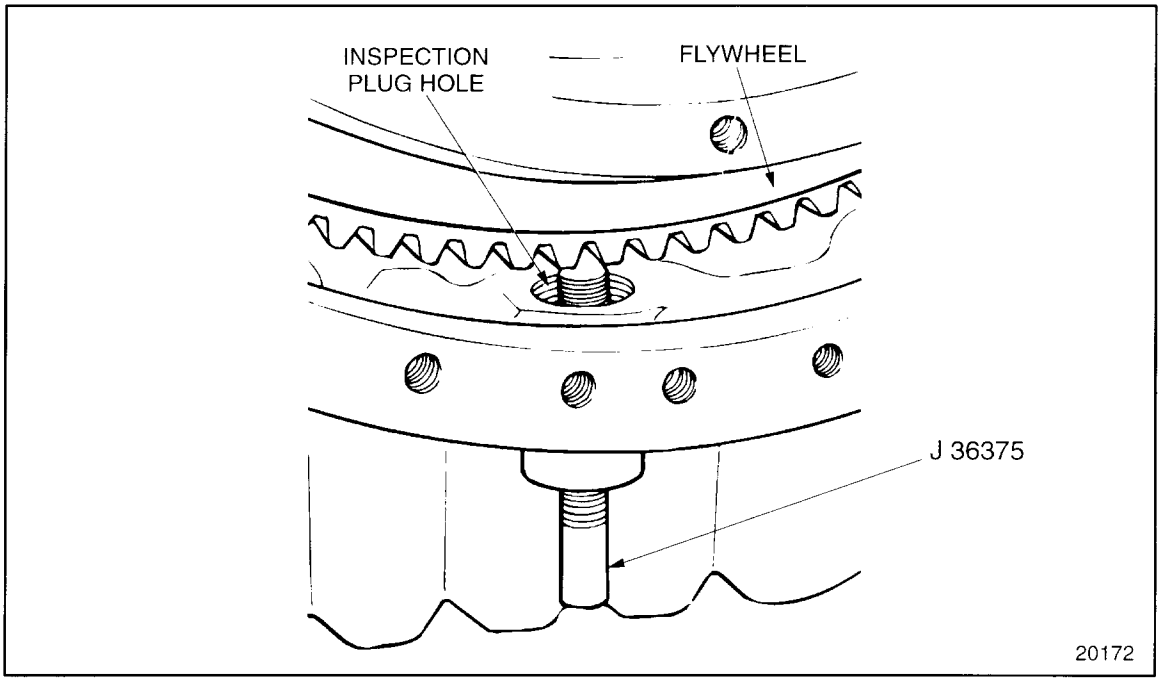

Figure 9-2 Flywheel Lock

 Copyright © 2004 DETROIT DIESEL CORPORATION

2. Thread the center screw of the J 36375–A into the flywheel housing until the tip of the tool rests between two teeth of the flywheel ring gear. Finger-tighten the knurled knob; see Figure 9-3.

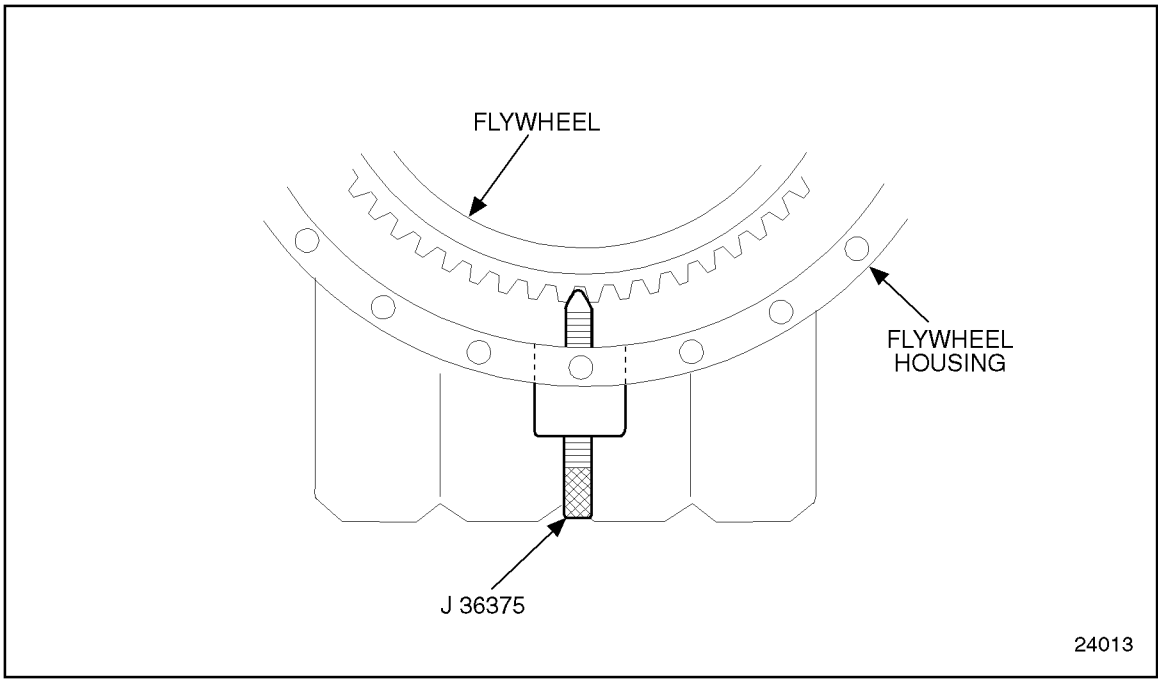

Figure 9-3 Flywheel Lock Location

NOTE:
It may be necessary to bar the engine over so that the tool center screw is exactly between two teeth.

3. Remove the PTO hub assembly attaching bolt and retainer.
4. Remove the PTO hub assembly.
5. Remove the PTO/crankshaft pulley; refer to section 1.13.2.

(Rev. 2004) *All information subject to change without notice.*
6SE483 0401 Copyright © 2004 DETROIT DIESEL CORPORATION

9.1.2.1 Inspection of Front Mounted Power Take-off

Visually inspect the PTO hub contact surfaces for galling or burrs. To correct surfaces that have damage, smooth these surfaces with emery cloth or a stone.

9.1.3 Installation of Front Mounted Power Take-off

Perform the following steps to install the PTO assembly:

1. If removed, install J 36375–A, to the inspection plug hole in the bottom of the flywheel housing; see Figure 9-2.
2. Install the PTO/crankshaft pulley; refer to section 1.13.3.
3. Install the PTO hub assembly inside of the PTO/crankshaft pulley ensuring the slot on the backside of the hub fits over the dowel in the pulley.
4. Install the PTO hub assembly attaching bolt and retainer after coating the bolts threads and underside of the bolt head with International Compound #2® or equivalent. Torque the bolt to 610 N·m (450 lb·ft).

 Copyright © 2004 DETROIT DIESEL CORPORATION

9.2 REAR ENGINE POWER TAKE-OFF (REPTO) ASSEMBLY

The REPTO (Rear Engine Power Take Off) is an aluminum SAE #1 flywheel housing mounted against the rear of the cylinder block, it takes the place of a standard flywheel housing. It provides a cover for the flywheel and serves as a support for the cranking motor and the transmission.

The aluminum flywheel housing has an internal idler gear that is driven off the rear of the crankshaft. Those gears drive an output yoke that faces the rear of the vehicle. The output yoke is located at the one o'clock position and has four different yoke configurations. It provides up to 300 hp intermittent and 240 hp continuous PTO power.

A rear oil seal, which is pressed into the housing, may be removed or installed without removing the housing. Refer to section 1.8.2.

The output yoke and its oil seals can be serviced. If there is any internal failure, the REPTO should be removed and replaced as an assembly.

9.2.1 Repair and Replacement for the Rear Engine Power Take-Off Assembly

The REPTO assembly currently is a nonserviceable component; if there are internal problems with the REPTO it must be replaced as an assembly.

(Rev. 2004) *All information subject to change without notice.*
6SE483 0401 Copyright © 2004 DETROIT DIESEL CORPORATION

To determine if repair is possible or replacement is necessary, perform the following procedure. See Figure 9-4.

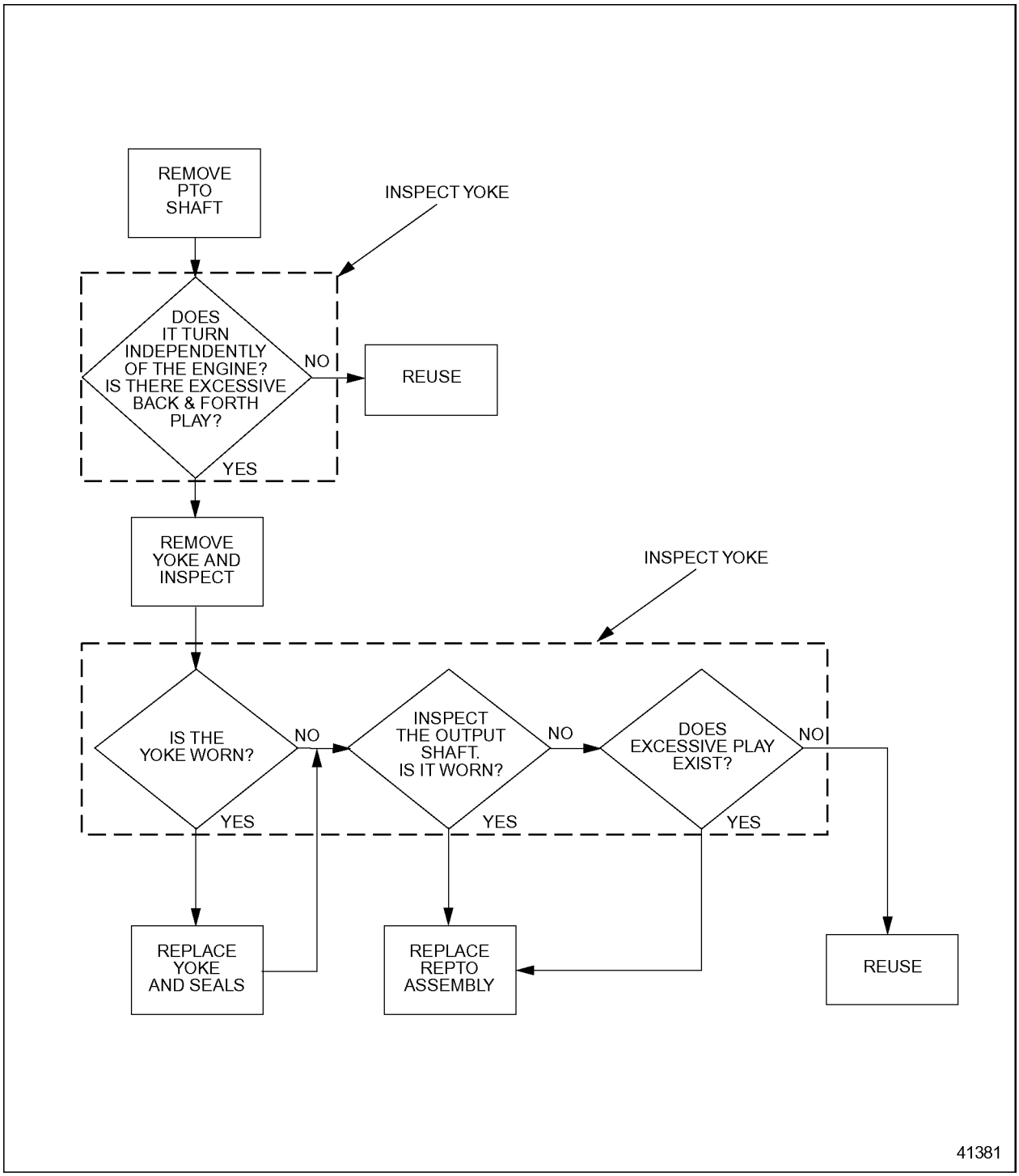

Figure 9-4 Flowchart for Repair or Replacement of REPTO Assembly

 Copyright © 2004 DETROIT DIESEL CORPORATION

9.2.2 Removal of Rear Engine Power Take-off Assembly

Remove the REPTO assembly as follows:

1. Disconnect battery power. Refer to section 8.3.2.
2. Remove cranking motor from the REPTO flywheel housing. Refer to section 8.4.2.
3. Remove transmission and PTO driveshaft and any other parts attached to the housing.
4. Remove the flywheel as follows:
   [a] Remove two adjacent flywheel bolts.
   [b] Insert two flywheel guide studs, J 36235 into the crankshaft. See Figure 9-5.

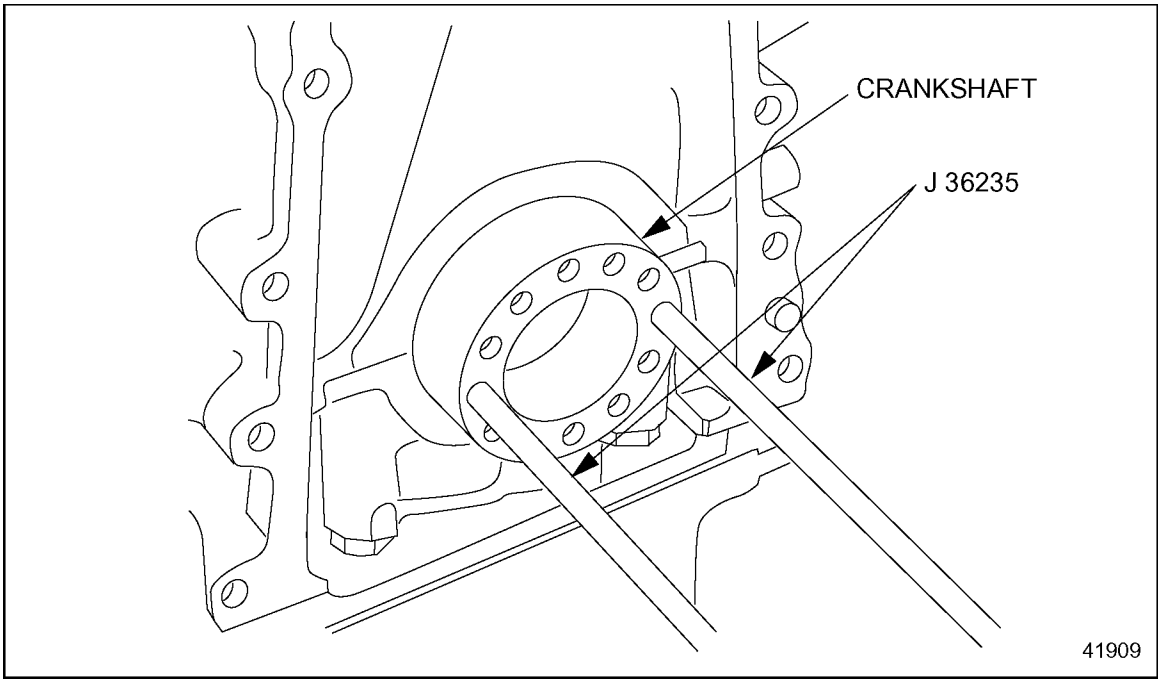

Figure 9-5 Flywheel Guide Studs

   [c] Remove the remaining flywheel bolts.
5. Drain oil pan housing by removing the plug at the bottom of the housing. Remove the oil line from the cooler.

(Rev. 2004) *All information subject to change without notice.*
6SE483 0401 Copyright © 2004 DETROIT DIESEL CORPORATION

6. Remove three plugs to gain access to bolts securing the housing to the block. See Figure 9-6
7. Remove the three bolts being careful not to drop them into the housing.

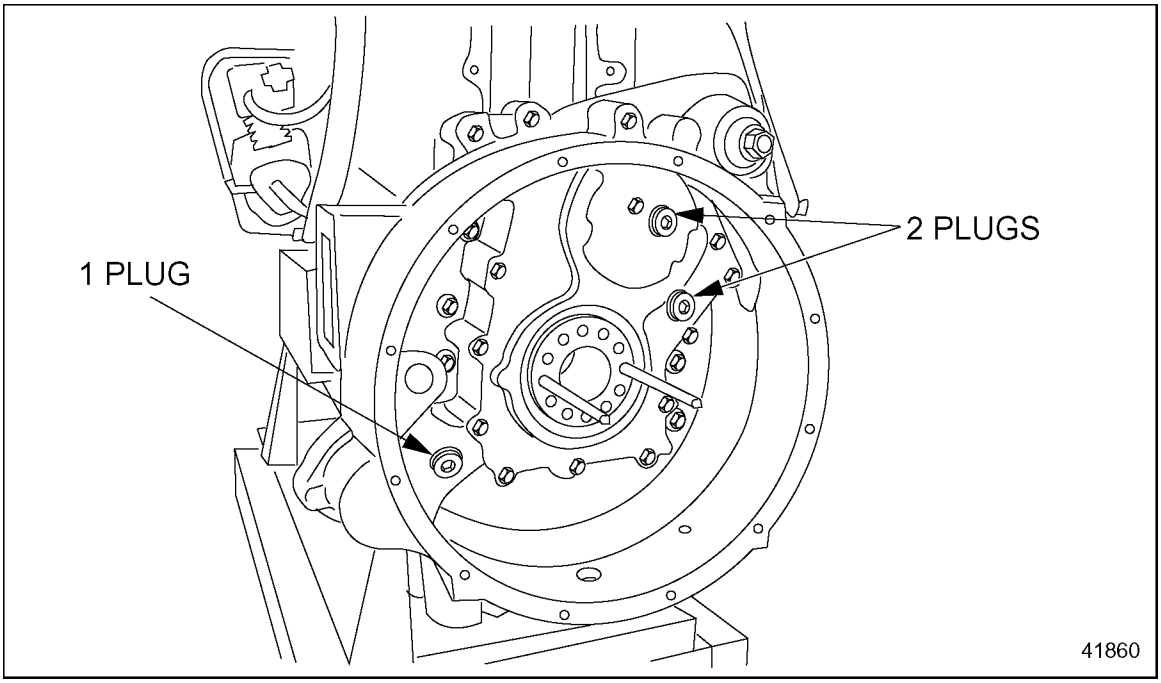

Figure 9-6 Pipe Plugs on the Gear Set Cover Plate

 Copyright © 2004 DETROIT DIESEL CORPORATION

NOTICE:
Do not drop the bolt or washer into the gear set. Engine or REPTO damage will occur.

8. Remove the remaining eight bolts.

⚠ CAUTION:
To avoid injury from a falling component while using a lifting device, never stand beneath a suspended load.

9. Attach a suitable sling or use a floor jack to support the flywheel housing, which weighs about 120 lbs. Gently tap the backside of the flywheel housing with a rubber mallet to loosen it from the block. Remove the housing.
10. Remove Gasket Eliminator®, Kent-Moore® part number or equivalent PT 7276 from the flywheel housing and block at this time. See Figure 9-7.

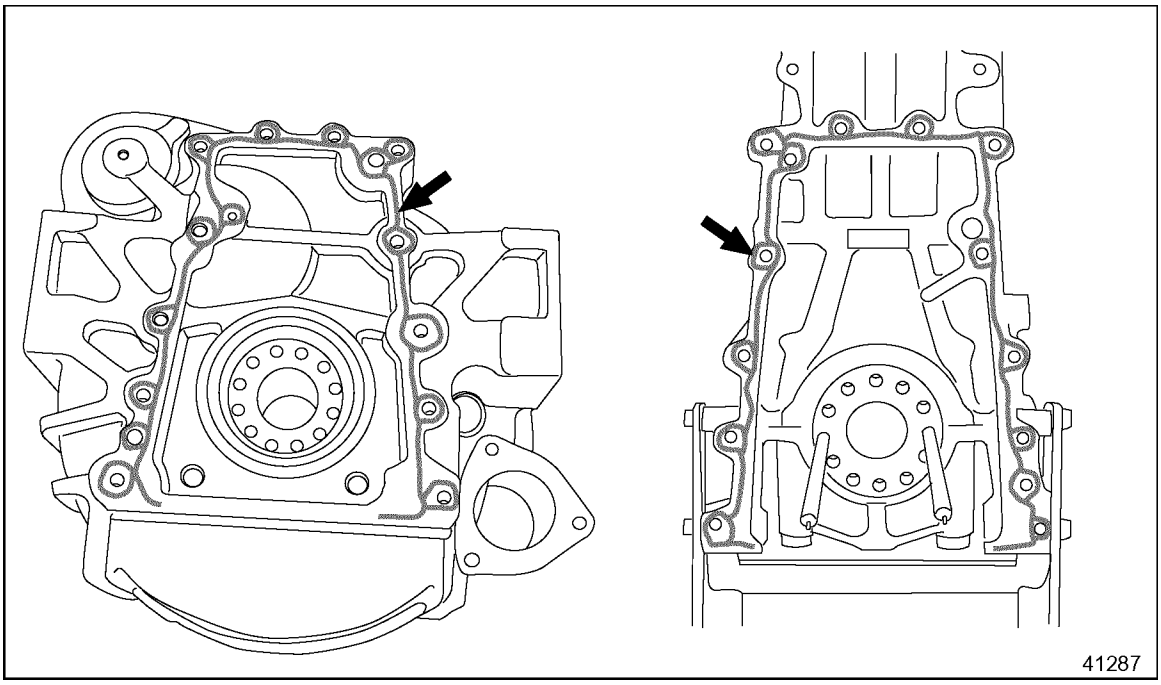

Figure 9-7 Removal of Gasket Eliminator®

(Rev. 2004) *All information subject to change without notice.*
6SE483 0401 Copyright © 2004 DETROIT DIESEL CORPORATION

⚠ CAUTION:

To avoid injury from flying sealant. Do not use an impact gun on plugs with white sealant.

11. Remove all sealing material from the block and housing. Refer to Section on “Cleaning” in the “General Information Section”.

9.2.3 Cleaning of Rear Engine Power Take-off Assembly

Clean the REPTO as follows:

1. Clean any residue from the end of the crankshaft and inside wall of the REPTO mounting hub.
2. Clean any residue from the yoke sealing surface, washer and nut.

9.2.3.1 Inspection of Rear Engine Power Take-off Assembly

Inspect the REPTO assembly as follows:

1. Inspect the flywheel. Refer to section 1.14.2.1.
2. Inspect flywheel housing for cracks and any other damage.
   [a] If sealing surface is damaged, repair with emery cloth.
   [b] If cracked, repair is not possible.
3. Inspect the crankshaft where the rear oil seal makes contact. Refer to section1.8.
   [a] Check for groove in crankshaft.
   [b] If crankshaft is grooved, install a wear sleeve over the crankshaft end. An oversized I.D. rear oil seal must be used with the rear sleeve. Refer to section 1.8.7.
4. Inspect the bottom of the yoke.
   [a] If burrs are found on the surface of the yoke, replace the component.
   [b] If no damage is found, reuse part.
5. Inspect the rubber yoke seal.
   [a] If any defects are found, replace the seal.
   [b] If no damage is found, reuse the seal.

9.2.4 Installation of Rear Engine Power Take-off Assembly

Install the REPTO as follows:

 Copyright © 2004 DETROIT DIESEL CORPORATION

1. Apply a lubricant like white grease to the end of the crankshaft and inside the wall of the REPTO mounting hub. See Figure 9-8.

NOTE:
If installing a new REPTO housing, ensure that all 11 plastic shipping plugs are removed from the housing.

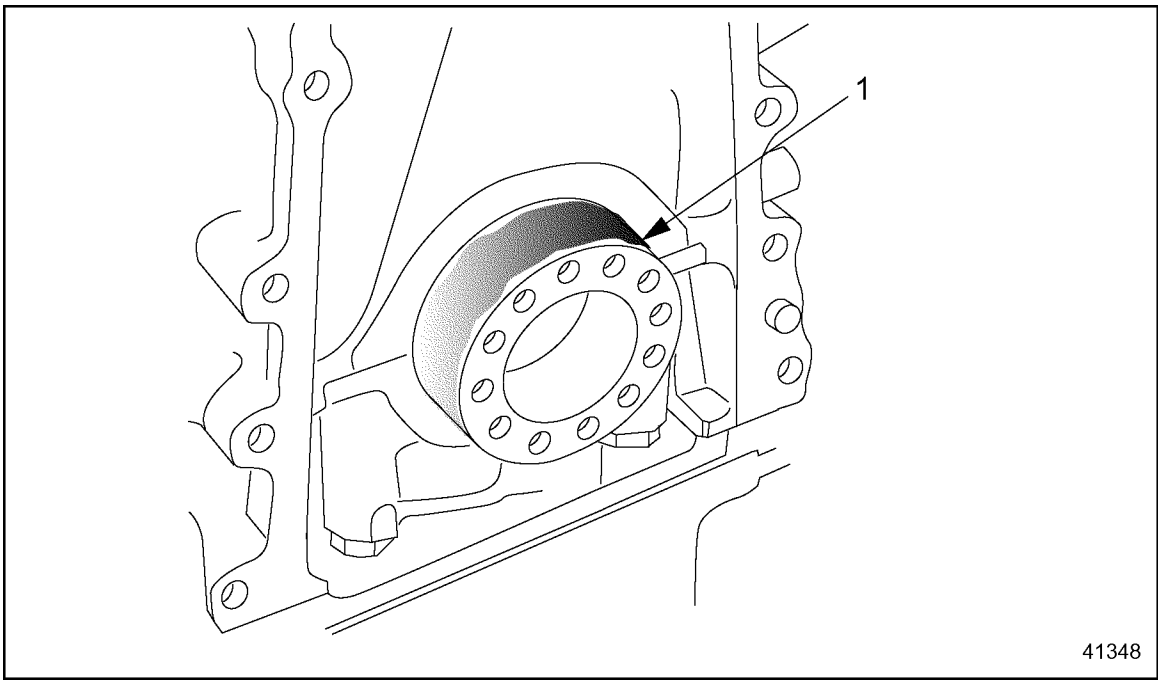

1. Crankshaft .

Figure 9-8 Application of Lubricant

(Rev. 2004) *All information subject to change without notice.*
6SE483 0401 Copyright © 2004 DETROIT DIESEL CORPORATION

2. If installing a new REPTO housing:

CAUTION:

To avoid injury from flying sealant. Do not use an impact gun on plugs with white sealant.

[a] Install the pipe plug above the cranking motor mount on the REPTO flywheel housing. See Figure 9-9.

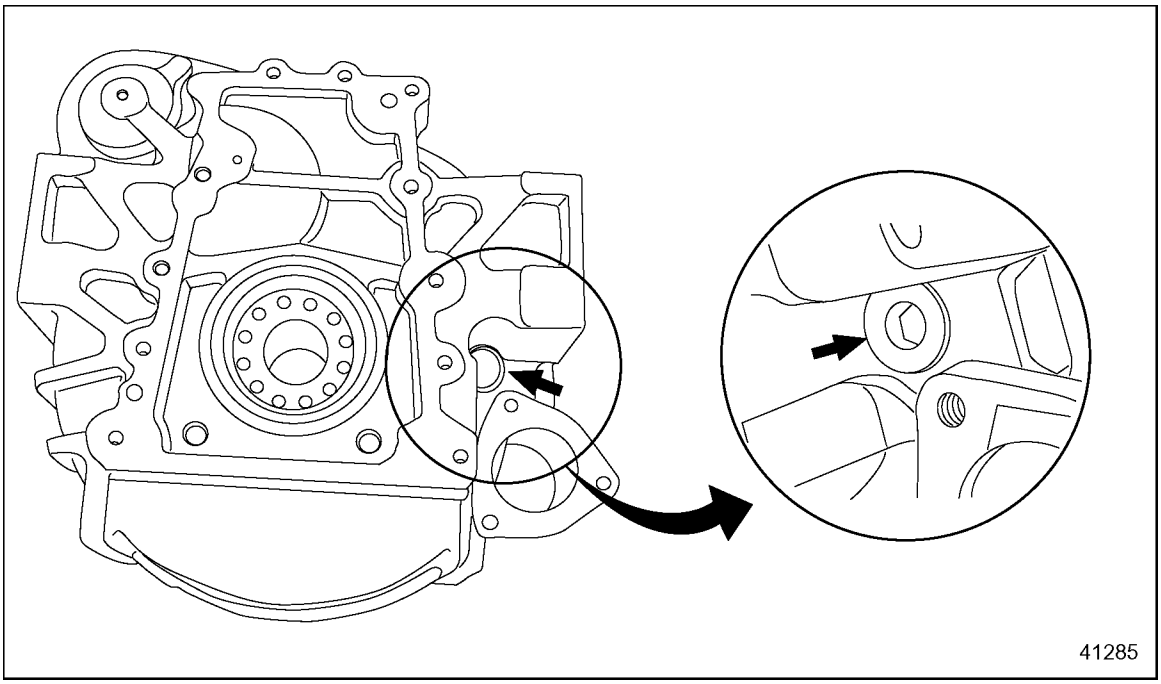

Figure 9-9 Installation of Pipe Plug Above Cranking Motor Mount

 Copyright © 2004 DETROIT DIESEL CORPORATION

[b] Install the bottom pipe plug located in the 6 o'clock position on the REPTO flywheel housing. See Figure 9-10.

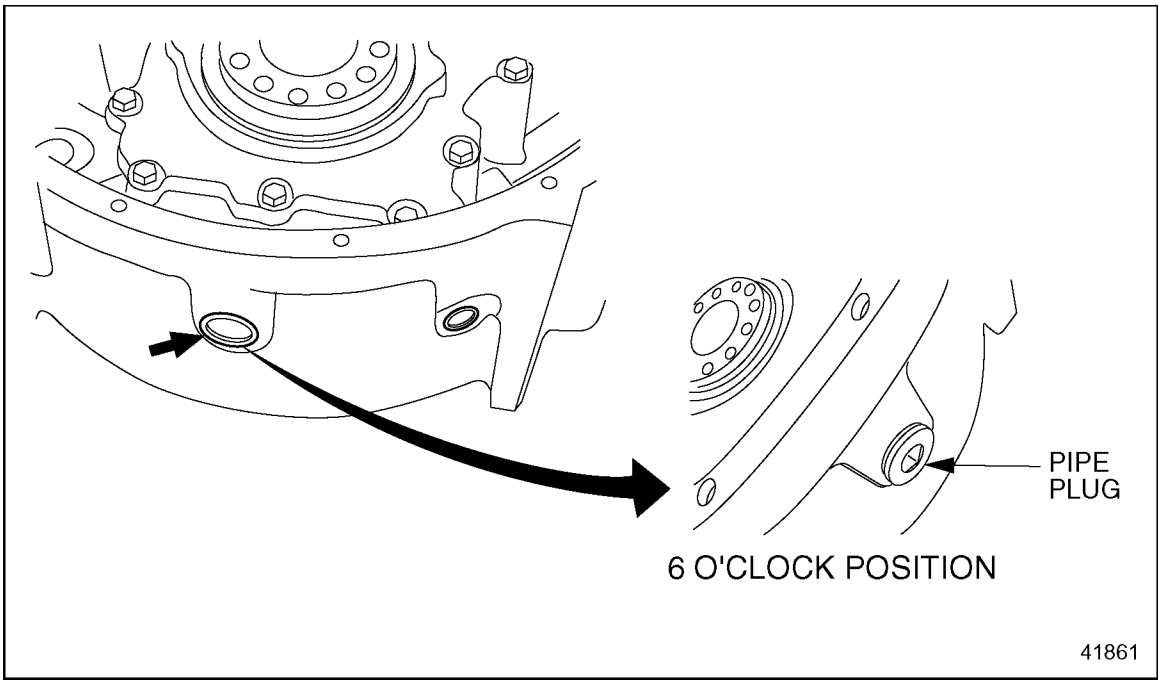

Figure 9-10 Installation of Pipe Plug in the 6 o'clock Position

(Rev. 2004) *All information subject to change without notice.*
6SE483 0401 Copyright © 2004 DETROIT DIESEL CORPORATION

[c] Install the pipe plug with a copper washer located in the 5 o'clock position on the REPTO flywheel housing. See Figure 9-11.

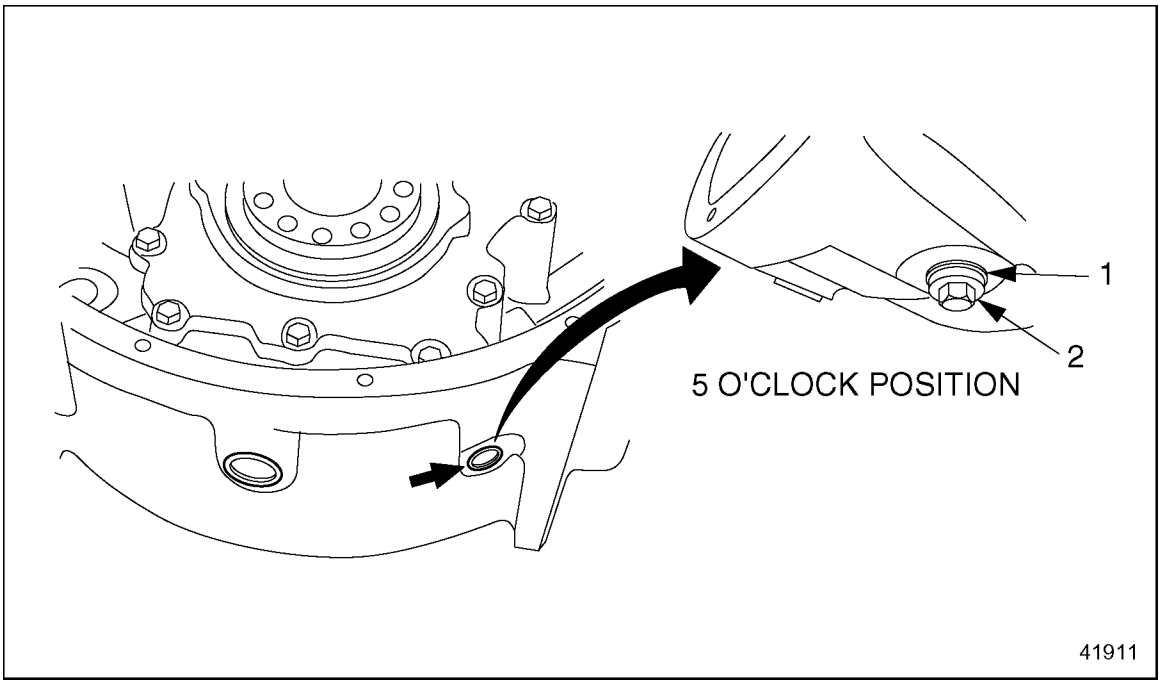

1. Copper Washer
2. Pipe Plug

Figure 9-11 Installation of Pipe Plug in the 5 o'clock Position

 Copyright © 2004 DETROIT DIESEL CORPORATION

NOTE:
Do not install any plugs in the two holes below the crankshaft on the back lower face (even though they are threaded), they are oil drain holes back to sump. See Figure 9-12.

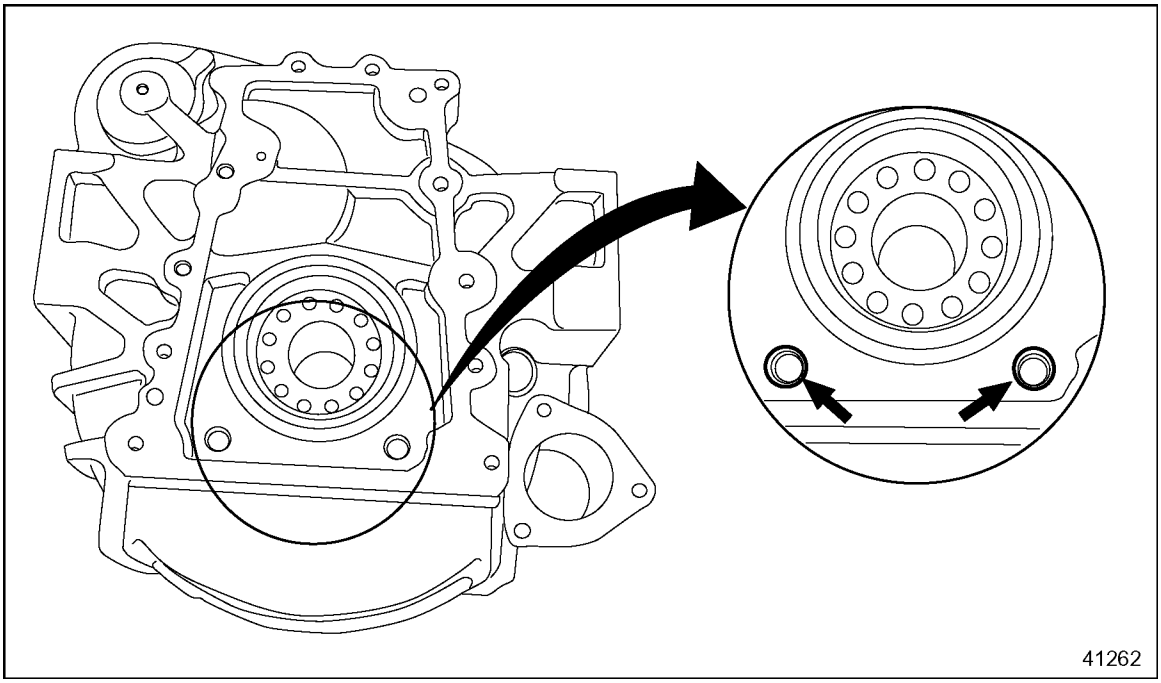

Figure 9-12 No Pipe Plug in these Two Threaded Holes

(Rev. 2004) *All information subject to change without notice.*
6SE483 0401 Copyright © 2004 DETROIT DIESEL CORPORATION

3. Apply Gasket Eliminator®, Kent-Moore® part number or equivalent PT 7276, to sealing surface of the flywheel housing or the block whichever is easier. See Figure 9-13.

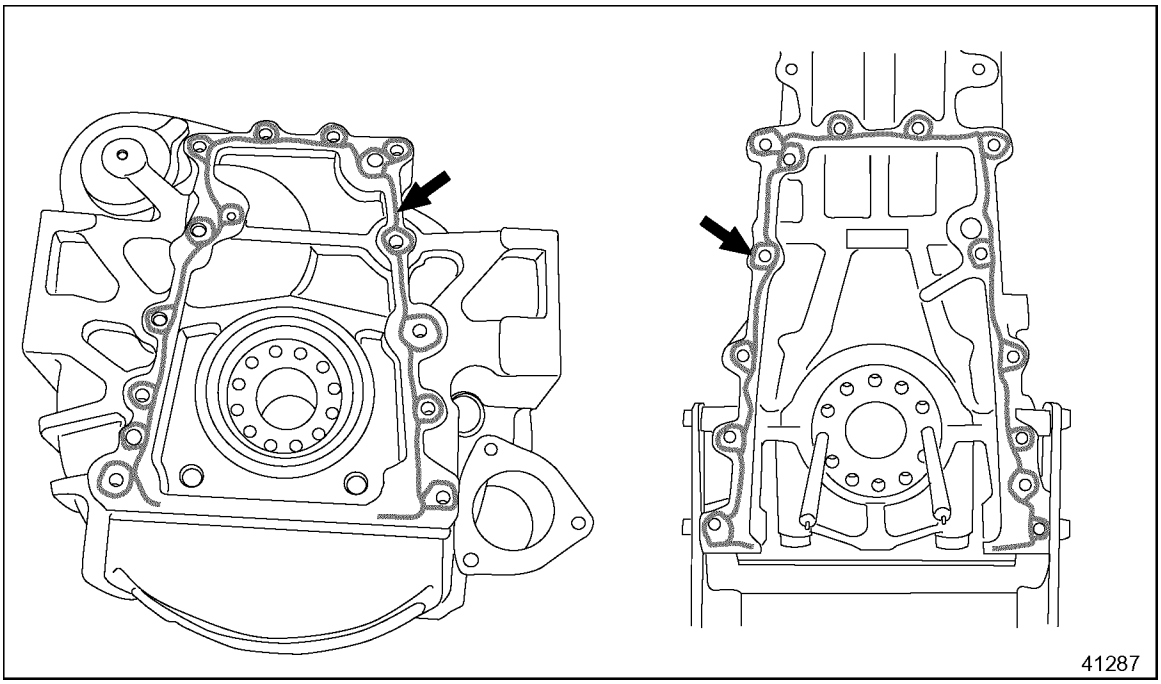

Figure 9-13 Application of Gasket Eliminator®

 Copyright © 2004 DETROIT DIESEL CORPORATION

4. Install oil fitting on back of flywheel housing. See Figure 9-14.

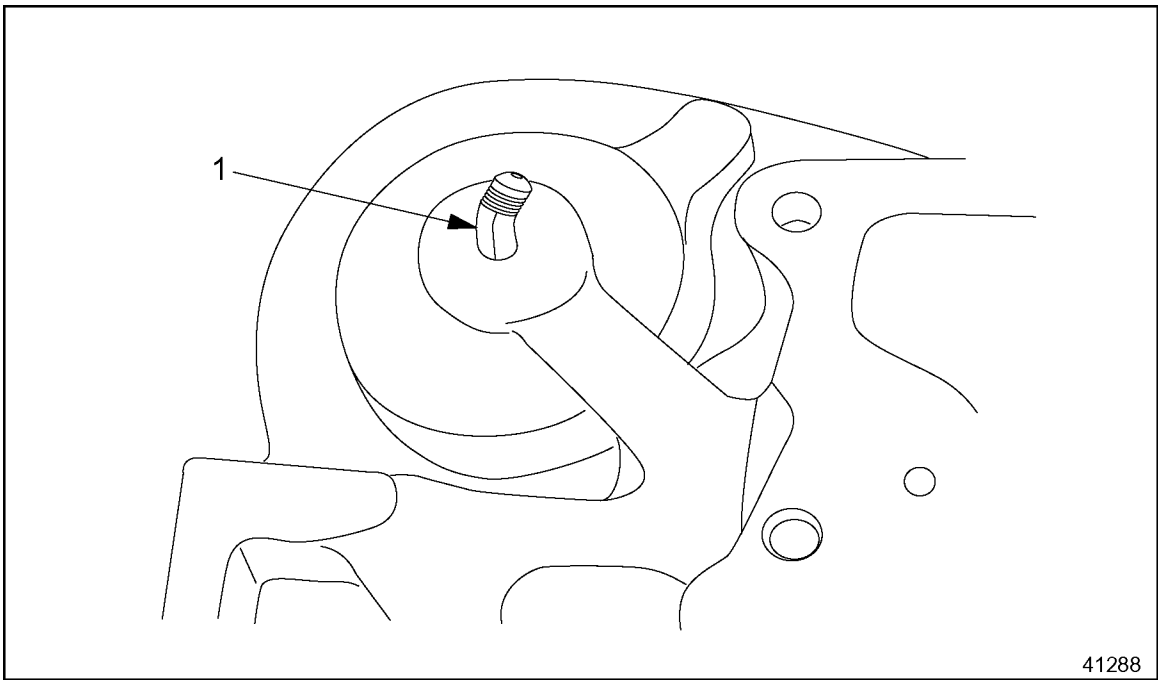

1. Oil Fitting .

Figure 9-14 Installation of Oil Fitting

5. Insert two flywheel guide studs, J 36235 into the crankshaft. See Figure 9-15.

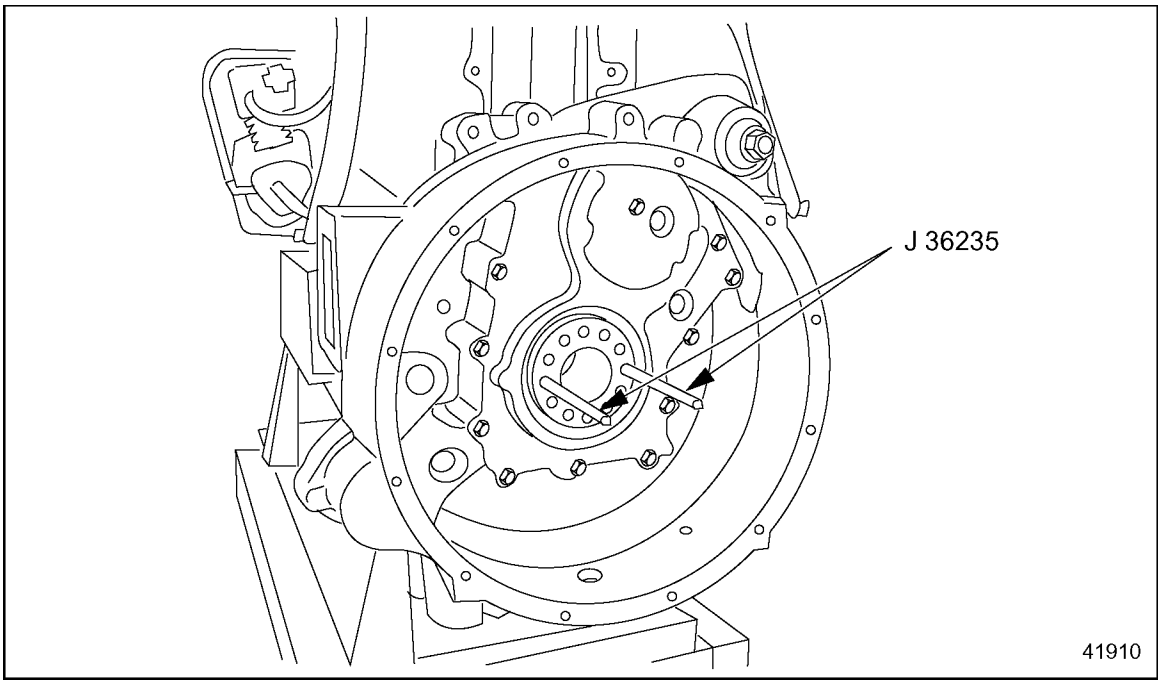

Figure 9-15 Flywheel Guide Studs

(Rev. 2004) *All information subject to change without notice.*
6SE483 0401 Copyright © 2004 DETROIT DIESEL CORPORATION

CAUTION:

To avoid injury from a falling component while using a lifting device, never stand beneath a suspended load.

6. Use a hoist to carefully slide the REPTO flywheel housing into position onto the guide studs. See Figure 9-16.

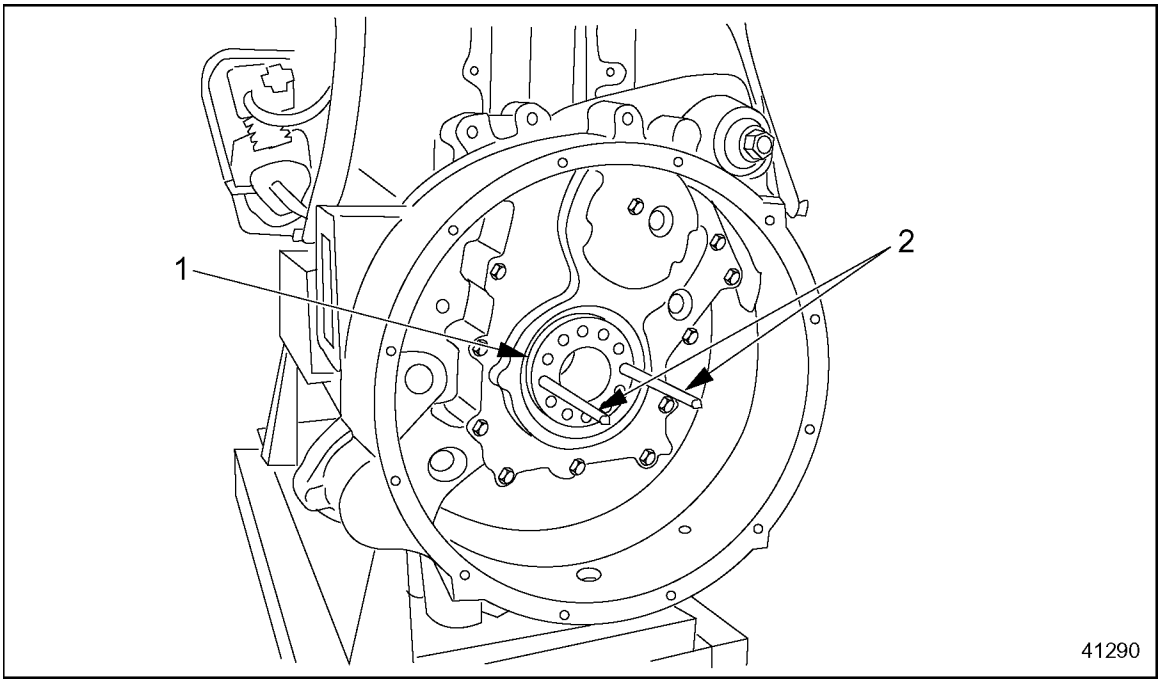

1. Crankshaft
2. Guide Studs J 36235

Figure 9-16 Installation of REPTO Flywheel Housing

 Copyright © 2004 DETROIT DIESEL CORPORATION

NOTICE:
Do not drop the bolt or washer into the gear set. Engine or REPTO damge will occur.

7. Using a magnetic socket, install and torque all eleven flywheel housing mounting bolts in sequence to 112–126 N·m (83–93 lb·ft.) for 12 mm bolts or 160–200 N·m (118–148 lb·ft.) for 14 mm bolts. See Figure 9-17.

NOTE:
Ensure that the three bolts behind plugs are not overlooked in this step.

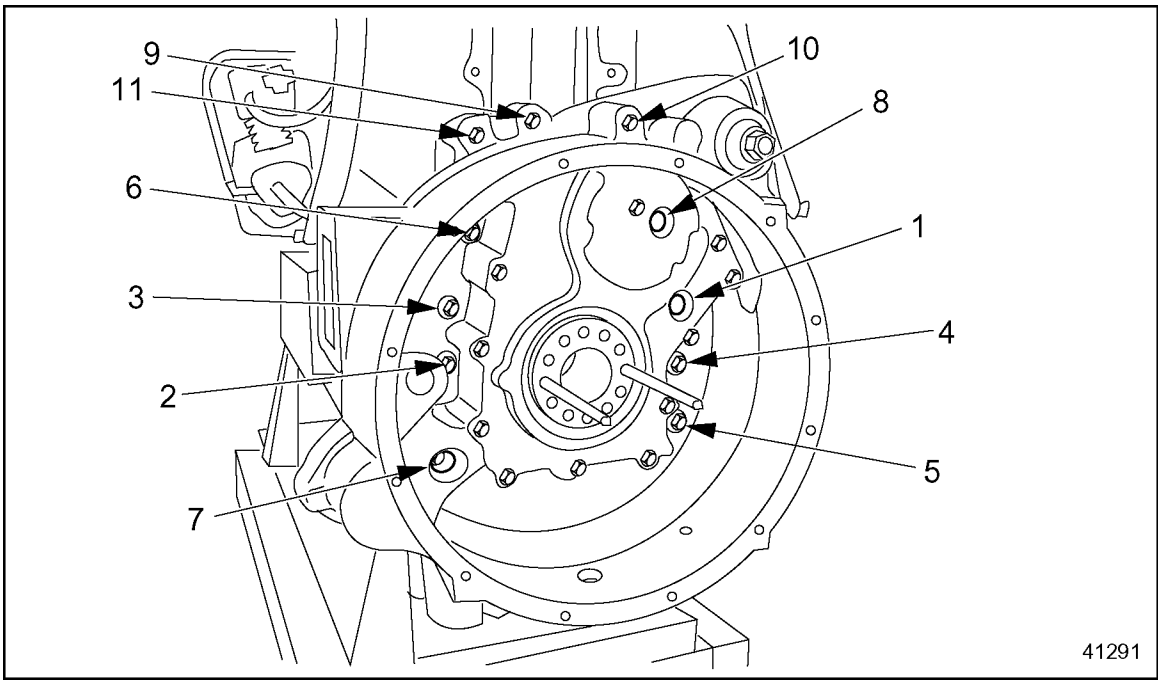

Figure 9-17 Flywheel Housing Bolt Location and Torque Sequence

(Rev. 2004) *All information subject to change without notice.*
6SE483 0401 Copyright © 2004 DETROIT DIESEL CORPORATION

8. Install the two pipe plugs located on the gear set cover plate and plug next to the cranking motor. See Figure 9-18.

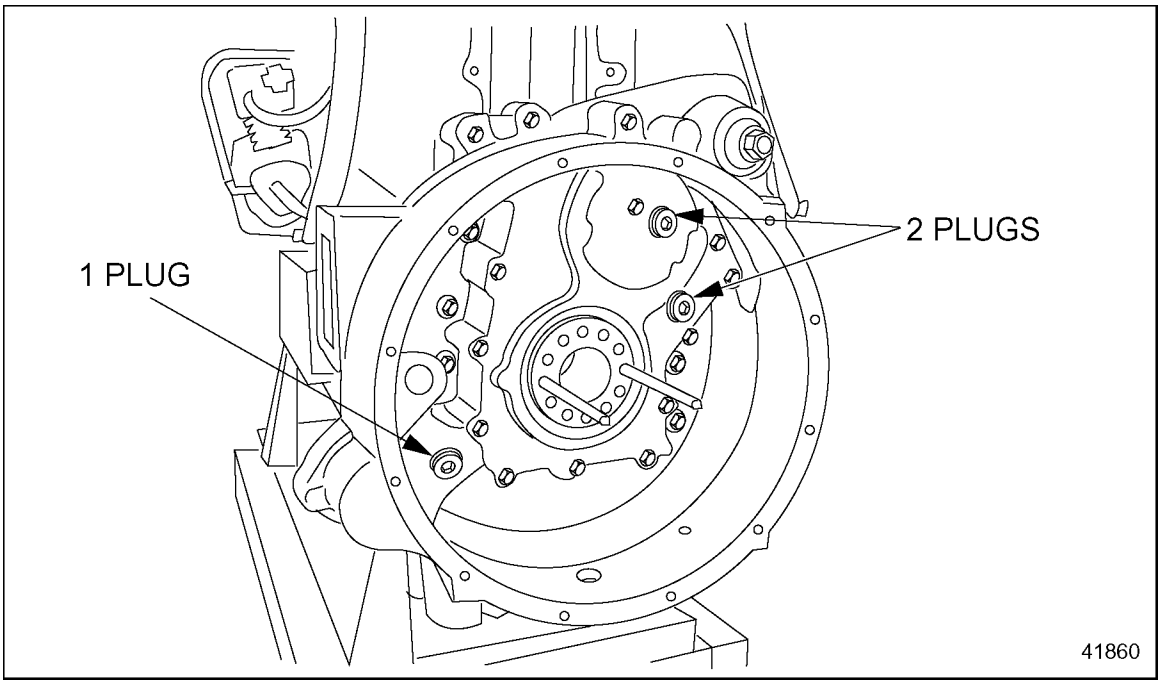

Figure 9-18 Pipe Plugs on the Gear Set Cover Plate

 Copyright © 2004 DETROIT DIESEL CORPORATION

9. Set crankshaft endplay as follows:

NOTICE:
Setting crankshaft end play must be done whenever the REPTO housing is installed to prevent crankshaft from damaging crankshaft thrust washers upon initial engine startup.

[a] Bolt the flywheel to the unit using six flywheel bolts.

[b] Torque the flywheel bolts to 102 N·m (75 ft·lb).

[c] Remove the flywheel. (This is necessary to remove the gap between the crankshaft and REPTO drive hub.)

[d] Attach driver handle, J 8092, onto the setting tool, J 42722–1. See Figure 9-19.

[e] Stack approximately 0.100 in. of shims, J 42722–4, onto the nose of the setting tool. See Figure 9-19.

[f] Add or remove shims until 0.005 in. gap is measured at four points (90 degrees apart) with a feeler gage. See Figure 9-19.

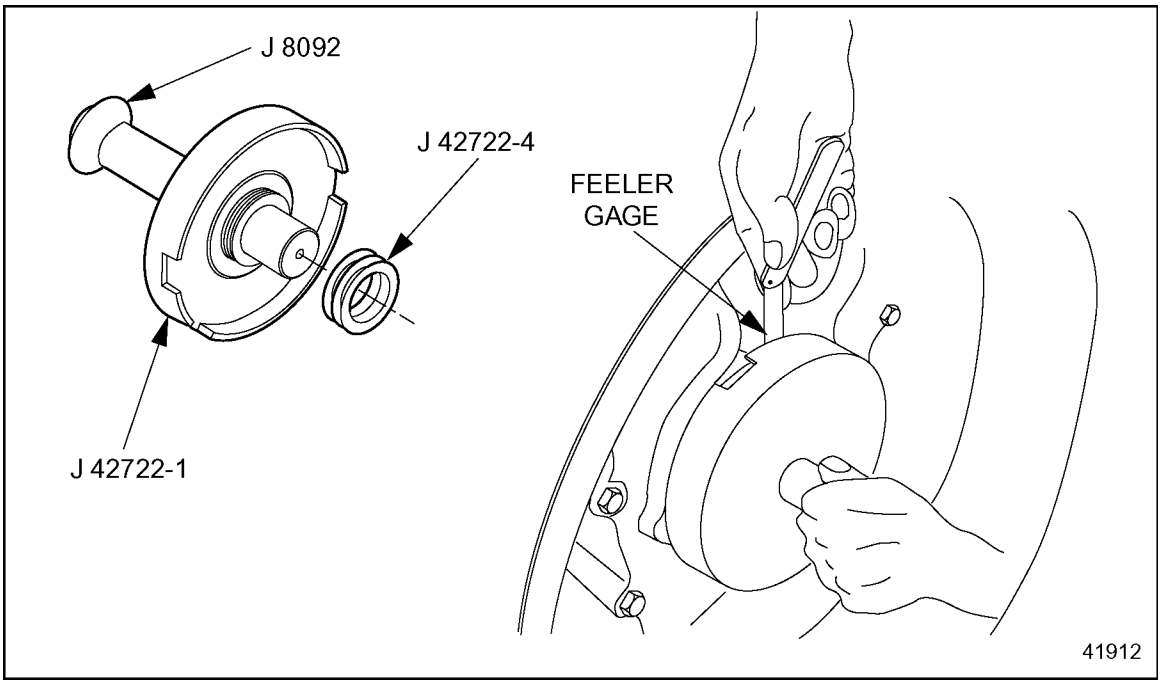

Figure 9-19 Installation of Shims

(Rev. 2004) *All information subject to change without notice.*
6SE483 0401 Copyright © 2004 DETROIT DIESEL CORPORATION

NOTE:
Tool must be held firmly in place and perpendicular to the housing.

[g] Hold the setting tool firmly against the drive hub; with a large hammer, hit the driver handle two to four times to set the gap between the crank and thrust washer. See Figure 9-20.

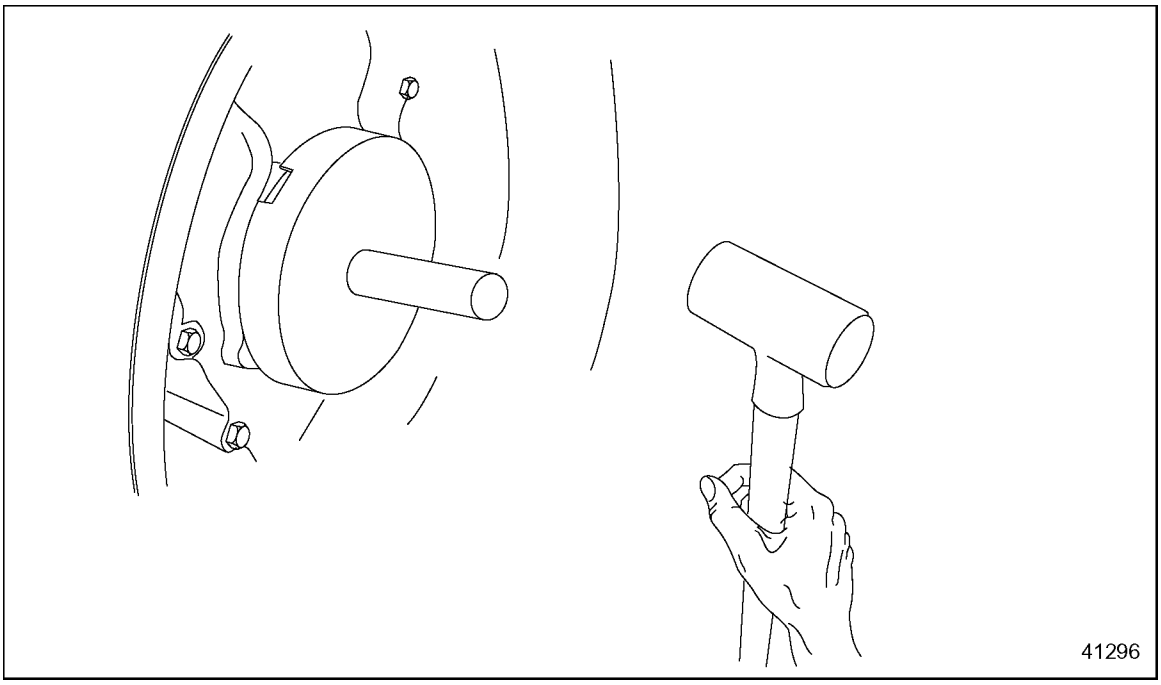

Figure 9-20 Installation of Shims

[h] Remove the tool, ensuring no shims remain stuck to the hub.

10. Bar the engine over from the front of the crankshaft. It should turn slightly harder than without the REPTO housing installed.
11. Install flywheel and torque bolts. Refer to section 1.14.3.
12. Install cranking motor assembly. Refer to section 8.4.3.

NOTE:
Crankshaft endplay is set and there is no further need to check if this procedure was done correctly.

 Copyright © 2004 DETROIT DIESEL CORPORATION

13. Install oil supply line.

NOTE:
Ensure the oil supply line is connected to the port next to the turbo oil supply line and not to the oil cooler assembly.

14. Test for REPTO Flywheel Housing Bore Concentricity as follows:
    [a] Attach the base post onto the crankshaft palm.
    [b] Assemble the dial indicators onto the base post.
    [c] Position the dial indicator square with the flywheel housing inside bore of the bell. Ensure the indicator has adequate travel in each direction. See Figure 9-21.

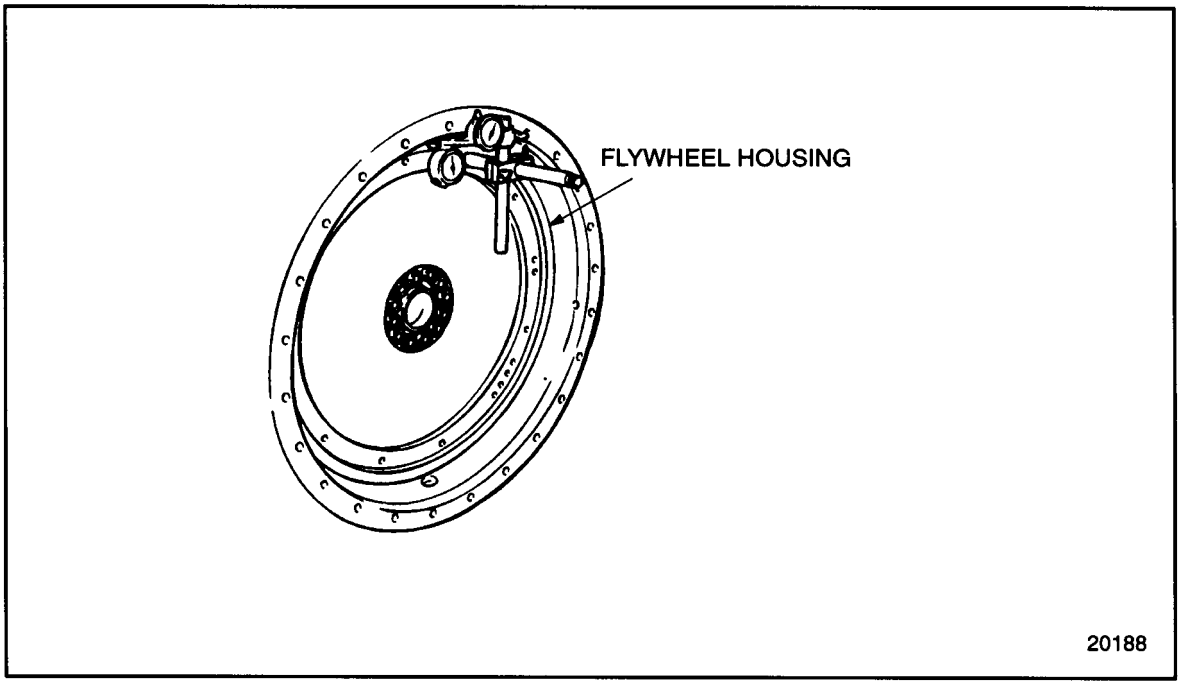

Figure 9-21 Measuring Flywheel Housing Bore Concentricity

    [d] Adjust each dial indicator to read zero at the twelve o'clock position.

(Rev. 2004) *All information subject to change without notice.*
6SE483 0401 Copyright © 2004 DETROIT DIESEL CORPORATION

[e] Bar the engine and rotate the crankshaft one complete revolution, taking readings at 90 degree intervals (four readings each for the bore). See Figure 9-22.

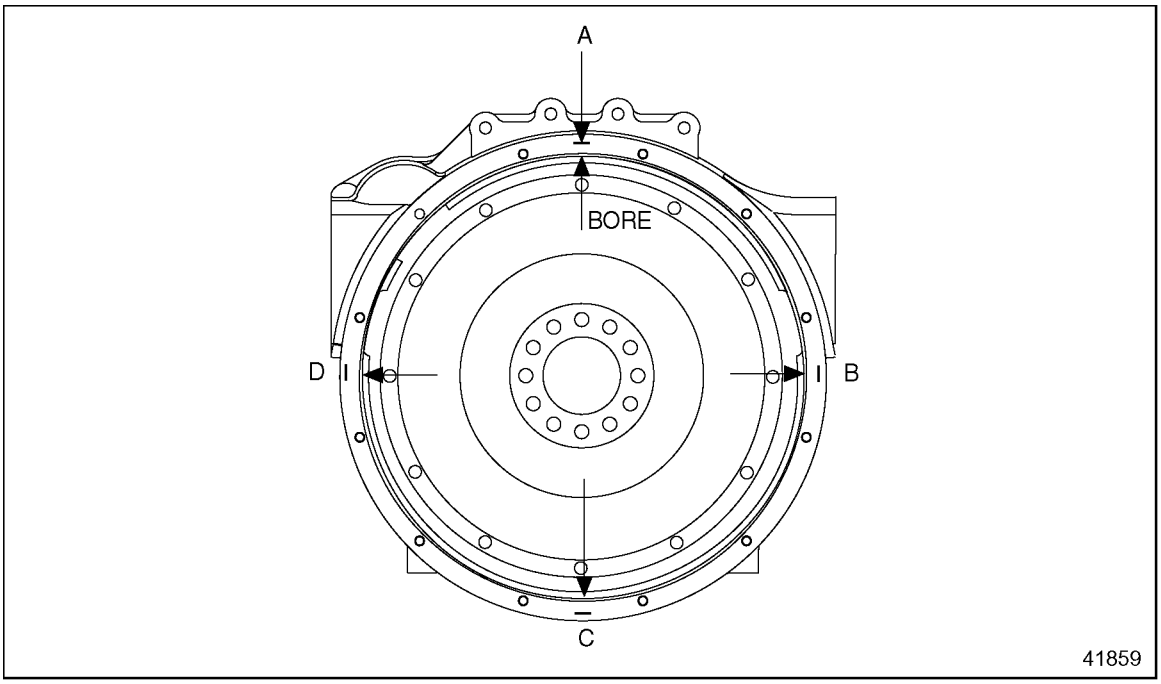

Figure 9-22 Flywheel Housing

[f] Remove the wrench or cranking bar before recording each reading to ensure accuracy.

NOTE:
The maximum total indicator reading must not exceed 0.33 mm (0.013 in.).

[g] If the run-out exceeds the maximum limits, check for dirt of foreign material between the flywheel housing and the cylinder block or oil pan.

[h] Clean the mating surfaces once again. Refer to section "General Information, Cleaning" in the beginning of this manual.

[i] Install REPTO Flywheel Housing. Refer to section 9.2.4.

[j] Check run-out again.

 Copyright © 2004 DETROIT DIESEL CORPORATION

15. Install transmission. Refer to OEM.
16. Apply lube to the yoke seal surface and slide it onto the PTO spline. See Figure 9-23.
17. Apply Loctite® 565 or equivalent to both sides of the large washer and hand start nut. See Figure 9-23.

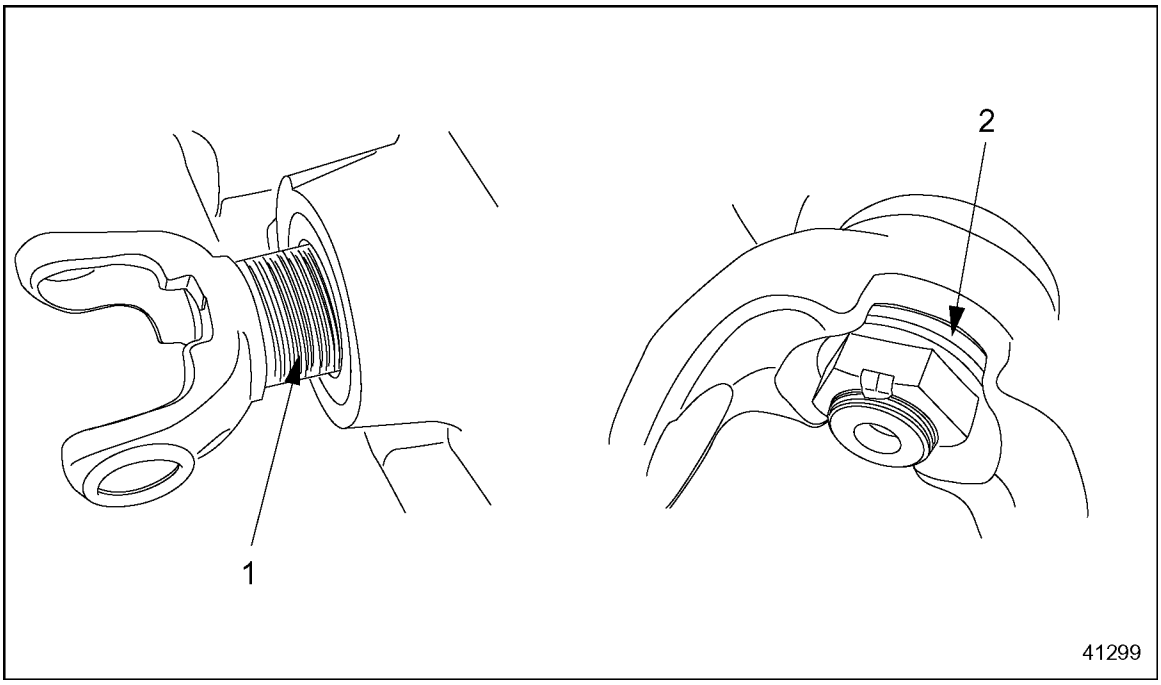

1. Yoke
2. Washer

Figure 9-23 Apply Lube to Yoke Seal and Loctite® 565 to Both Sides of Washers

18. Insert a 3/4 in. drive wrench in the front pulley to stop crank from turning.
19. Install the nut to the spline and torque to 474–542 N·m (350–400 ft lbs).

(Rev. 2004) *All information subject to change without notice.*
6SE483 0401 Copyright © 2004 DETROIT DIESEL CORPORATION

NOTE:
All cranking motors assembled to the REPTO housings should be installed with a new gasket.

20. Install cranking motor. Refer to section 8.4.3 .

NOTICE:
Do not connect to the wrong port. Connecting to the wrong port will allow coolant to be fed to the gears and the engine will fail.

21. Install the oil supply line to the brass fitting on the housing and the opened port.
22. Install oil pan. Refer to section 3.11.4.
23. Fill engine with clean lube oil. Refer to section 5.2.
24. Install engine into vehicle.
25. Start and run engine for verification of proper engine operation.

 Copyright © 2004 DETROIT DIESEL CORPORATION

(Rev. 2004) *All information subject to change without notice.*
6SE483 0401 Copyright © 2004 DETROIT DIESEL CORPORATION

10 SPECIAL EQUIPMENT

Section		Page
10.1	AIR COMPRESSOR (VEHICLE APPLICATIONS ONLY)	10-3
10.2	AIR COMPRESSOR DRIVE HUB	10-19
10.3	AIR COMPRESSOR/RAW WATER PUMP DRIVE ASSEMBLY	10-24
10.4	KIM HOT START STARTING AID SYSTEM (MARINE)	10-50
10.A	ADDITIONAL INFORMATION	10-51

 Copyright © 2004 DETROIT DIESEL CORPORATION

10.1 AIR COMPRESSOR (VEHICLE APPLICATIONS ONLY)

The original Series 60 air compressor is mounted to the rear of the gear case on the left side of the engine. See Figure 10-1.

NOTE:
Genset and marine engines do not have air compressors.

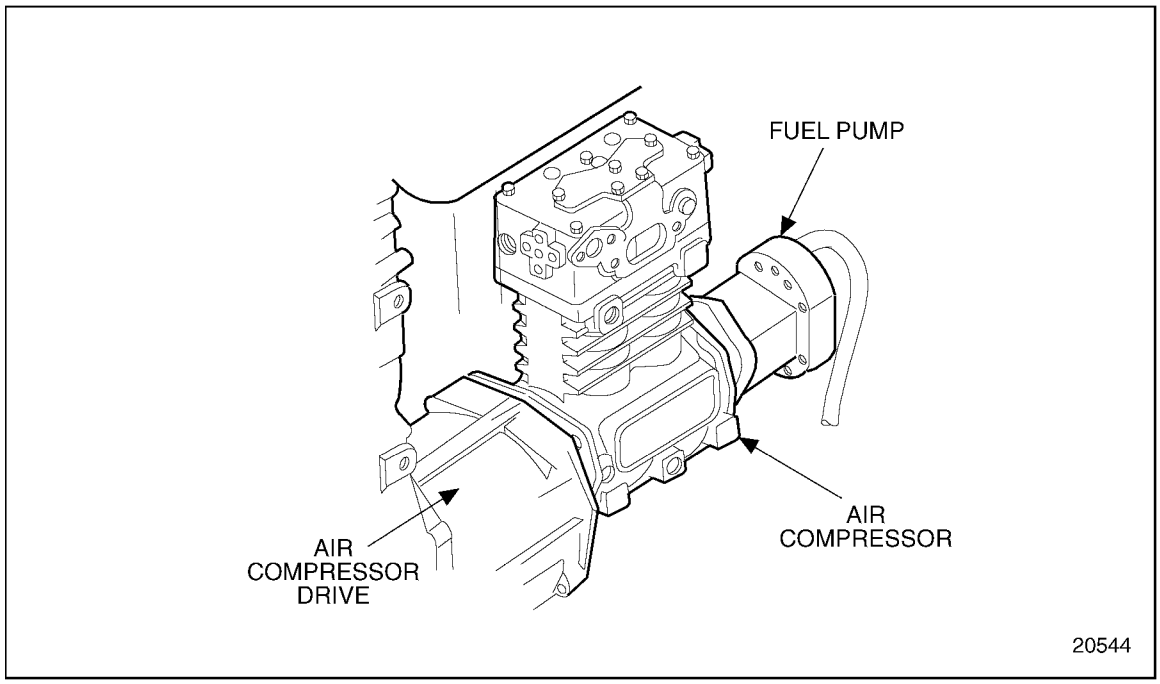

Figure 10-1 Original Air Compressor Mounting

The original air compressor drives the engine fuel pump which is bolted to the rear end of the compressor. The air compressor is designed to accept a drive coupling placed between the air compressor and fuel pump.

 Copyright © 2004 DETROIT DIESEL CORPORATION

Certain applications, and all Series 60 engines built before 1990, do not use the air compressor to drive the engine fuel pump. The air compressor is mounted in the same place on these units, but the engine fuel pump is mounted to the fuel pump drive assembly. The fuel pump drive assembly is bolted to the gear case above the air compressor and is driven by the bull gear. See Figure 10-2.

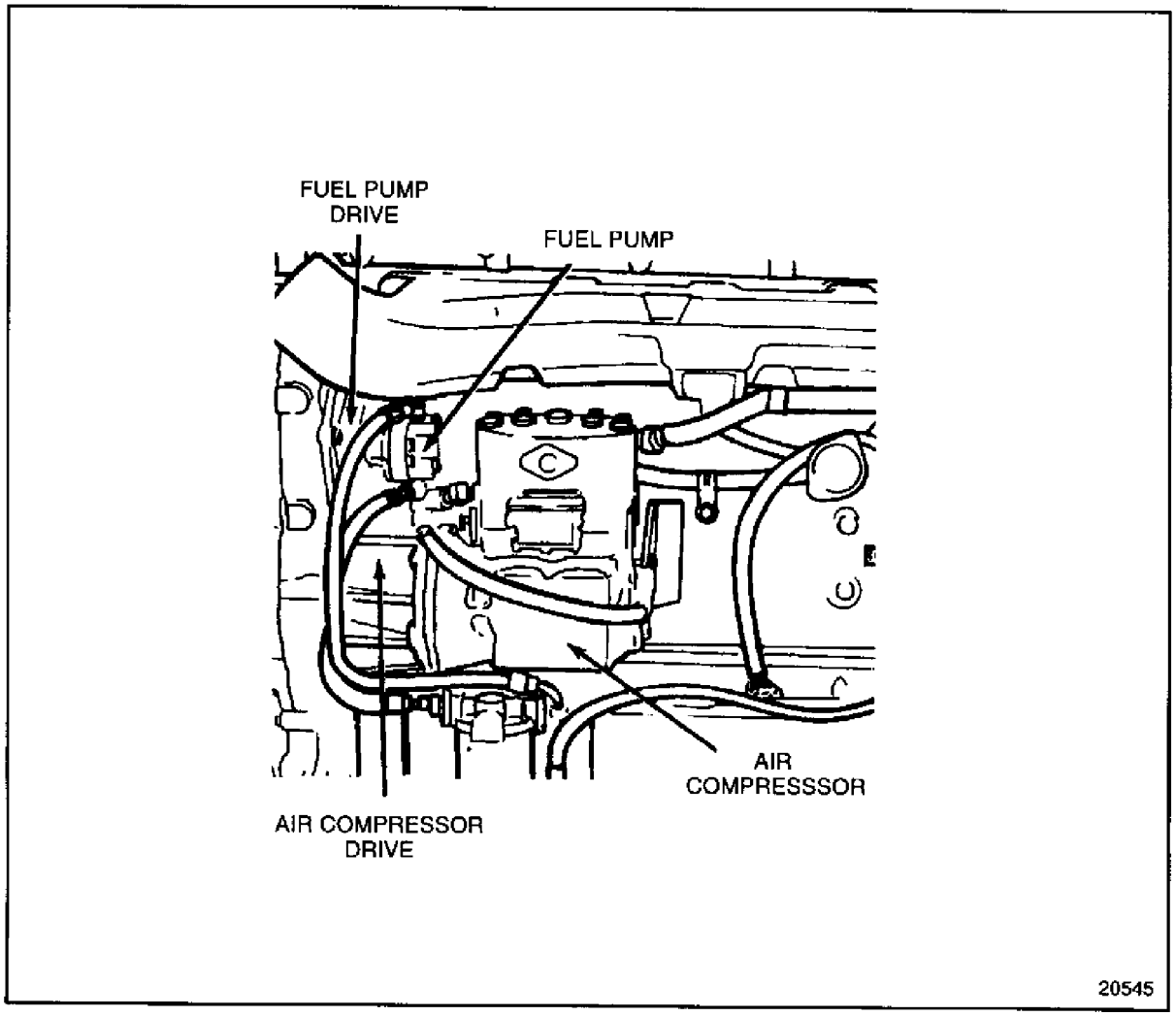

Figure 10-2 Original Air Compressor with Flange Mounted Fuel Pump

(Rev. 2004) *All information subject to change without notice.*
6SE483 0401 Copyright © 2004 DETROIT DIESEL CORPORATION

The original air compressor is driven by the bull gear and water cooled. Engine coolant is fed to the compressor through a flexible hose tapped into the engine block water jacket and connected to the front of the compressor. Coolant returns from the rear of the compressor through a flexible hose to the engine cylinder head. Lubricating oil is supplied to the compressor by a line from the cylinder block oil gallery that connects to the air compressor. Lubricating oil returns to the engine crankcase through the air compressor drive assembly.

NOTE:
An air compressor oil test card (DD5524) is available to test engine-mounted air compressors for excessive oil leakage. Contact an authorized Detroit Diesel service outlet for details.

The current adaptorless air compressors have replaced the original air compressors and adaptors on the majority of Series 60 on-highway engines. This change took effect with unit serial number 6R210293, built November 30, 1994. The original compressor and adaptor are available on certain on-highway and industrial models due to customer preference.

An optional 28 cfm, twin-cylinder air compressor has replaced the former optional 31 cfm, four-cylinder air compressor, starting with model year 1999. The 28 cfm, high output air compressor is a naturally aspirated design that requires the intake air to be plumbed from the clean air side of the air filter.

Both high-output air compressors require the engine-driven fuel pump to be mounted to the gear case above the air compressor.

For Series 60 2002 Exhaust Gas Recirculation (EGR) engine a naturally aspirated single cylinder reciprocating compressor with a rated displacement of 13 cubic feet per minute at 1250 RPM is used. The engine provides a continuous supply of oil to the compressor. Oil is routed from the oil passage in the gear case to the compressor oil inlet.

 Copyright © 2004 DETROIT DIESEL CORPORATION

Current adaptorless air compressors are similar to the original compressors, except that their mounting flanges have been redesigned to permit direct installation of the compressor onto the gear case. The drive gear stackup on this compressor has been modified to eliminate the need for a drive adaptor. See Figure 10-3.

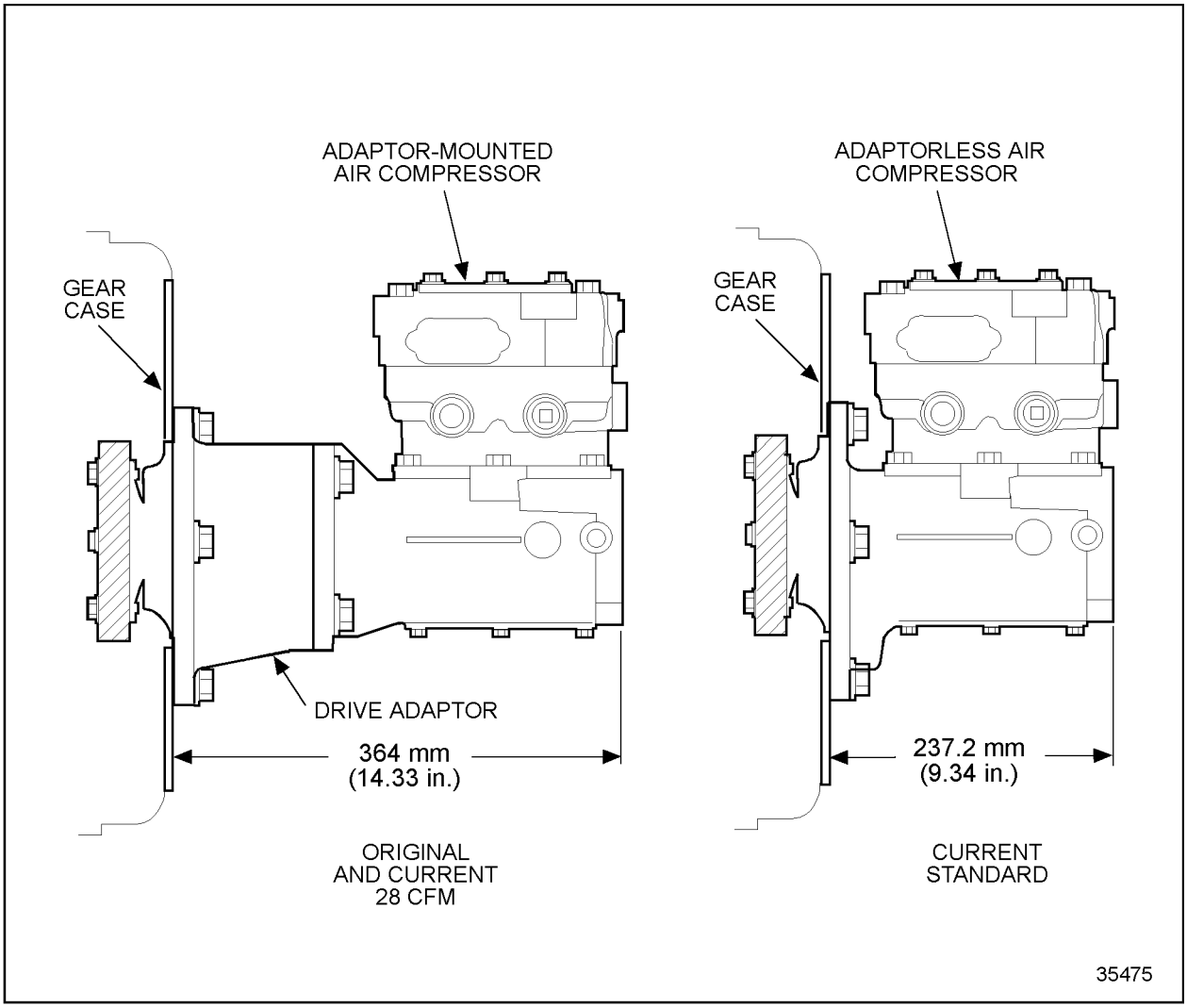

Figure 10-3 Original Adaptor, Current 28 CFM-mounted, and Current Adaptorless Air Compressor

NOTE:
If information is required to service an original air compressor, refer to section 10.1.8.

(Rev. 2004) *All information subject to change without notice.*
6SE483 0401 Copyright © 2004 DETROIT DIESEL CORPORATION

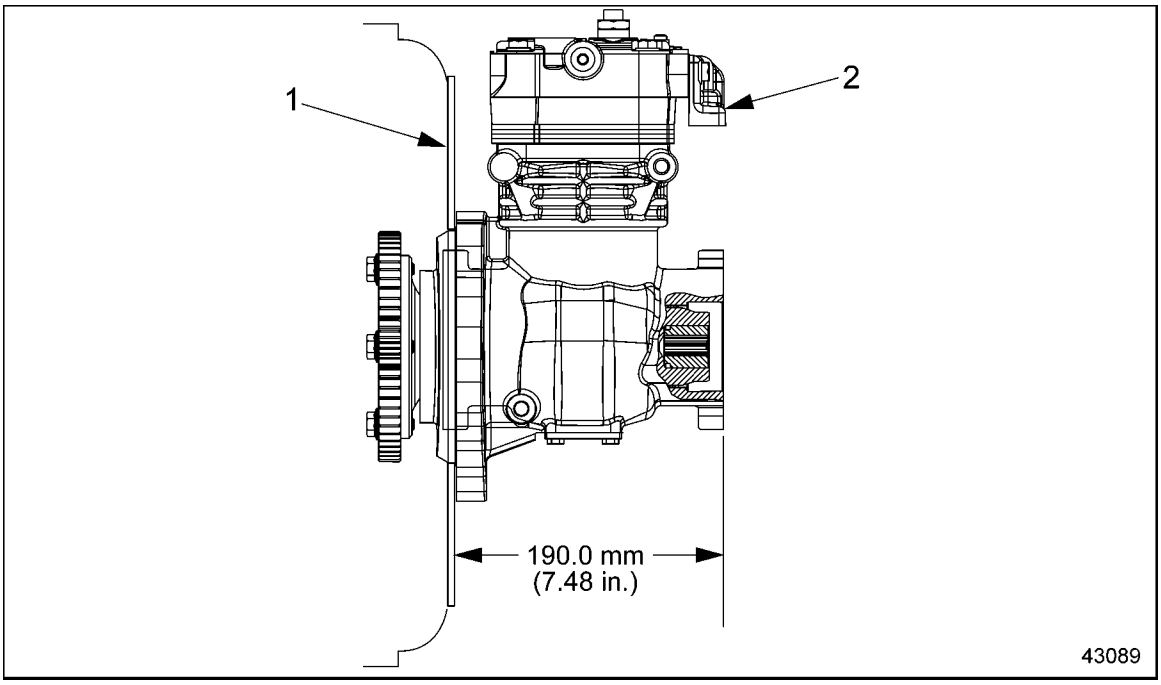

1. Gear Case
2. Single Cylinder Air Compressor 13 CFM

Figure 10-4 Series 60 2002 Single Cylinder Air Compressor 13 CFM

 Copyright © 2004 DETROIT DIESEL CORPORATION

The current Series 60 adaptorless air compressor is flange-mounted to the rear of the gear case, located on the left side of the engine. See Figure 10-5.

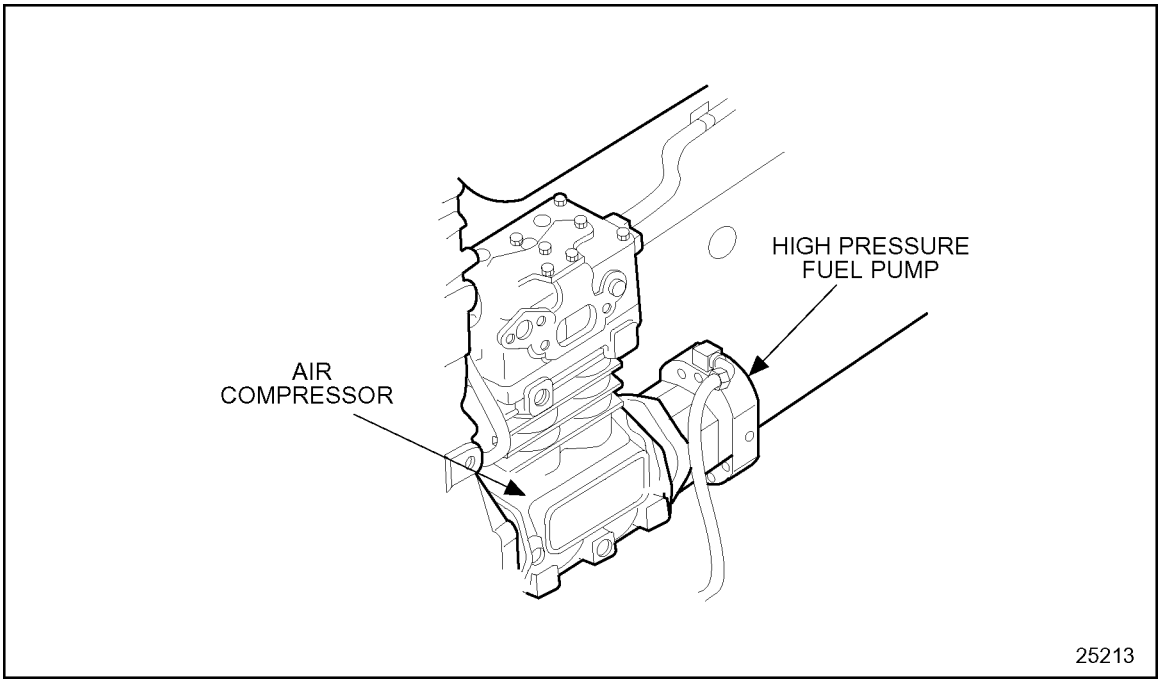

Figure 10-5 Adaptorless Air Compressor Mounting

Current adaptorless air compressors also drive the engine fuel pump which is bolted to the rear end of the compressor. The compressor crankshaft is designed to accept a drive coupling placed between the compressor and fuel pump.

(Rev. 2004) *All information subject to change without notice.*
6SE483 0401 Copyright © 2004 DETROIT DIESEL CORPORATION

10.1.1 Replacement of Adaptorless Air Compressor

Detroit Diesel does not service the adaptorless air compressor. Service of an adaptorless air compressor should be referred to an authorized service center of the original equipment manufacturer.

To replace the adaptorless air compressor, perform the following procedure. See Figure 10-6.

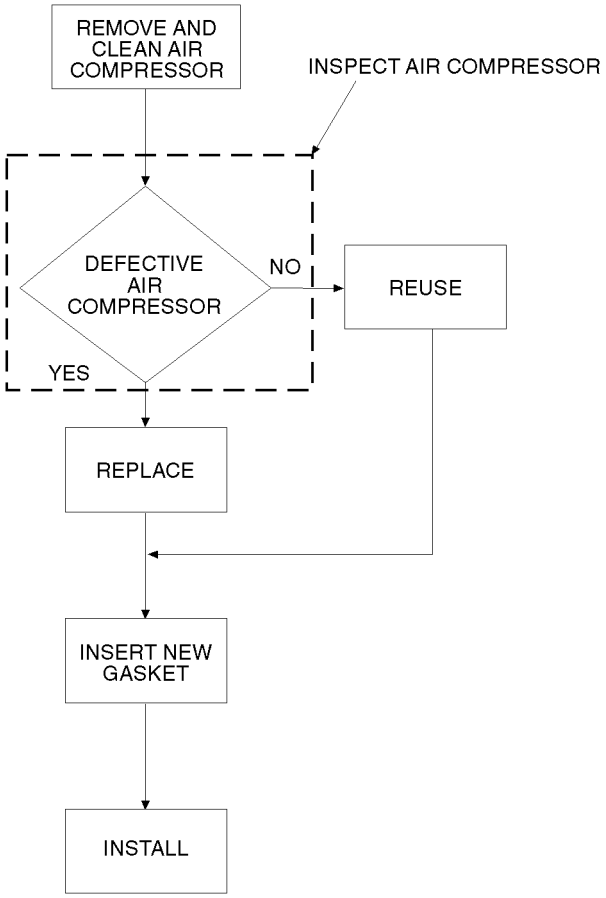

Figure 10-6 Flowchart for Replacement of Adaptorless Air Compressor

 Copyright © 2004 DETROIT DIESEL CORPORATION

10.1.2 Cleaning and Removal of Adaptorless Air Compressor

Precleaning is not necessary.

Remove the adaptorless air compressor as follows:

1. Disconnect the air lines to and from the compressor.
2. Disconnect the fuel pump lines.
3. Remove the fuel pump and drive coupling. Refer to section 2.8.2.
4. Drain the cooling system. Refer to section 13.13.4.
5. Disconnect and drain the coolant supply and return lines at the air compressor.
6. Disconnect the lubricating oil supply line from the compressor.
7. Remove the bolts securing the air compressor support bracket to the cylinder block and air compressor.
8. Remove the support bracket.

NOTE:
Due to the cylinder block and compressor configuration, the upper inside air compressor-to-air compressor drive bolt is difficult to reach with standard tools. Compressor Wrench J 35948 will facilitate removal and installation of this bolt.

9. Remove the five bolts and one nut that secure the air compressor to the gear case.
10. For Series 60 2002 EGR Single Cylinder Air Compressor remove the five bolts that secure the air compressor to the gear case.
11. Slide the air compressor rearward to disengage the hub from the coupling.

10.1.2.1 Inspection of Adaptorless Air Compressor

Refer to OEM guidelines to determine if the air compressor needs to be repaired or replaced.

(Rev. 2004) *All information subject to change without notice.*
6SE483 0401 Copyright © 2004 DETROIT DIESEL CORPORATION

10.1.3 Installation of Adaptorless Air Compressor

Install the adaptorless air compressor as follows:

1. Clean all gasket material from the mating surfaces of the air compressor and the gear case.
2. Align the reference mark on the fuel pump drive coupling to the nine o'clock position. This will set the air compressor piston at top dead center and will help to ease the process of checking gear lash.
3. Using a new gasket and bolts and nut previously removed, install the air compressor to its original location on the gear case.

NOTE:
The shorter bolt is installed in the two o'clock position and the nut is installed in the twelve o'clock position.

 Copyright © 2004 DETROIT DIESEL CORPORATION

4. For torquing sequence, see Figure 10-7. Use compressor wrench J 35948 to torque the upper inside bolt. Using the bolt and nut torquing sequence, torque five bolts and one nut to 58–73 N·m (43–54 lb·ft).

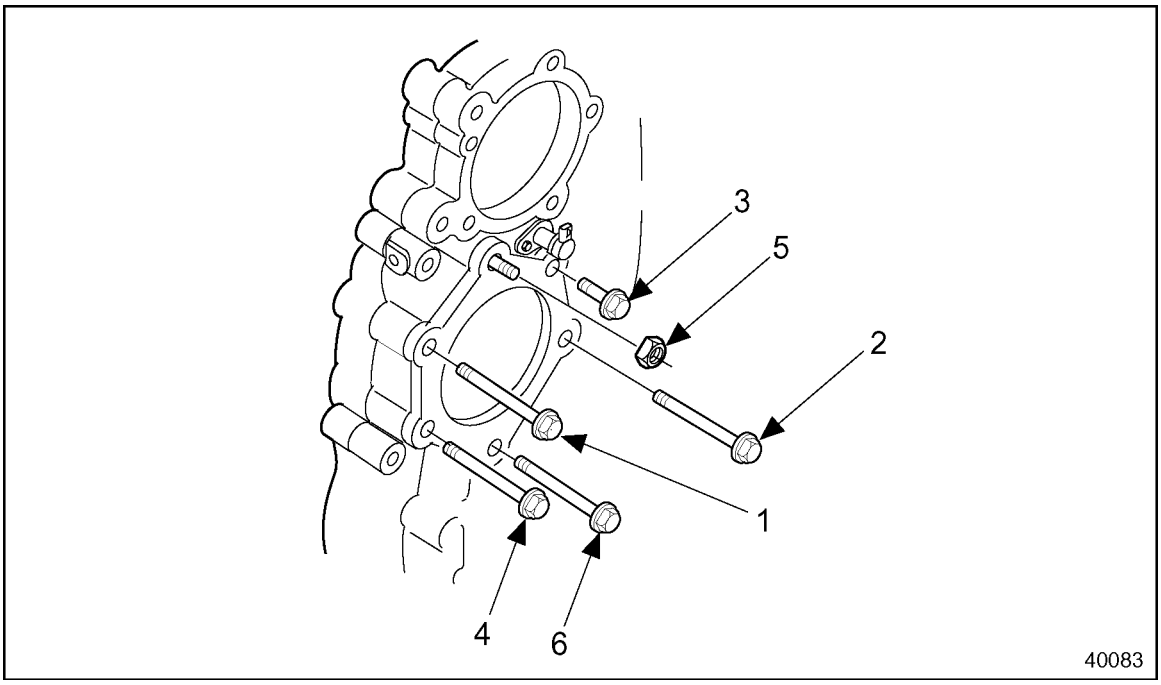

Figure 10-7 Bolt Torque Sequence

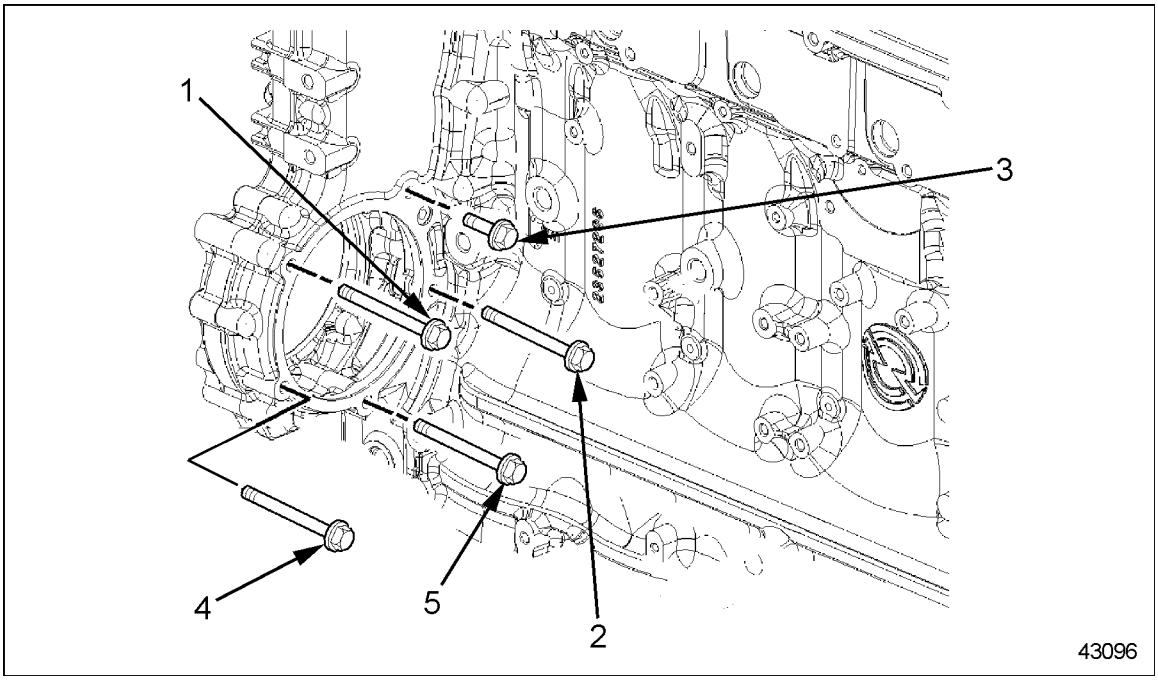

Figure 10-8 Bolt Torque Sequence Series 60 2002 Single Cylinder Air Compressor

(Rev. 2004) *All information subject to change without notice.*
6SE483 0401 Copyright © 2004 DETROIT DIESEL CORPORATION

5. For torque sequence for Series 60 2002 EGR Single Cylinder Air Compressor see Figure 10-8. Torque five bolts to 58-73 N·m (43-54 lb·ft).
6. Refer to section 1.22.2.1 step 16 and check the bull gear-to-air compressor drive gear lash measurement.
7. Refer to section 1.22.2.1 step 16 and install the power steering pump drive coupling, power steering pump, and cover assembly to the gear case cover.
8. Install the improved air compressor support bracket to the compressor and cylinder block as follows:
   [a] Tighten the support bracket-to-air compressor bolts. For 25 mm long bolts, use a torque of 41 - 52 N·m (30 - 38 lb·ft). For 20 mm long bolts, use a torque of 30–38 N·m (22–28 lb·ft).
   [b] Torque the support bracket-to-cylinder block bolts to 58 - 73 N·m (43 - 54 lb·ft).

⚠ CAUTION:

To avoid injury from flying parts when working with components under spring tension, wear adequate eye protection (face shield or safety goggles).

9. Install the hose clamps onto the hoses. Install the coolant supply and return lines and connect them to the air compressor.
10. Install the lubricating oil supply line to the air compressor.
11. Install the air lines to and from the compressor.
12. Refer to section 2.8.6 and install the air compressor-driven fuel pump.
13. Refer to section 13.13.4 and fill the cooling system.

⚠ CAUTION:

Diesel engine exhaust and some of its constituents are known to the State of California to cause cancer, birth defects, and other reproductive harm.

- ☐ **Always start and operate an engine in a well ventilated area.**
- ☐ **If operating an engine in an enclosed area, vent the exhaust to the outside.**
- ☐ **Do not modify or tamper with the exhaust system or emission control system.**

14. Start the engine and check for leaks.

 Copyright © 2004 DETROIT DIESEL CORPORATION

10.1.4 Replacement of the Original-type Air Compressor

Detroit Diesel does not service the original-type air compressor. Service of the original-type air compressors should be referred to an authorized service center of the original equipment manufacturer.

To replace the original-type air compressor, perform the following procedure. See Figure 10-9.

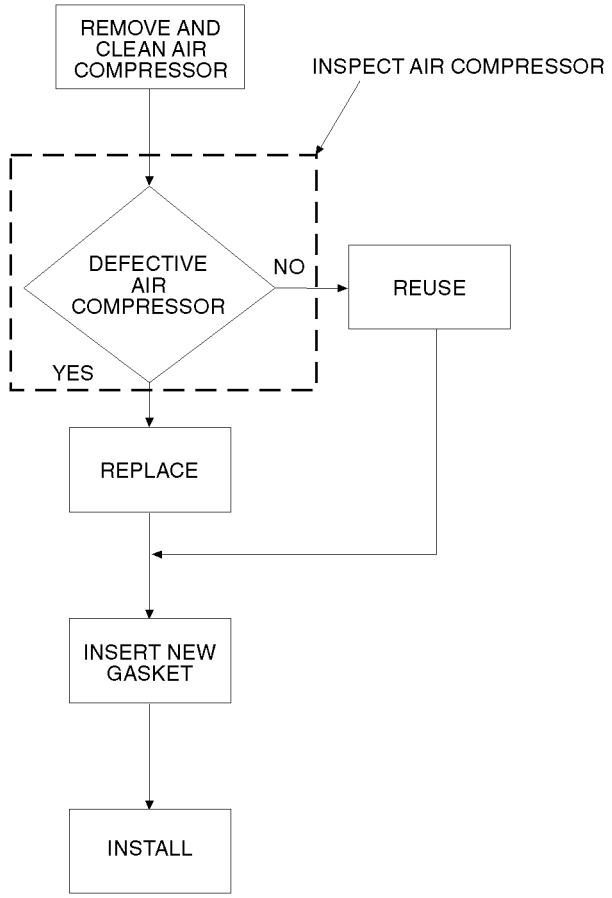

Figure 10-9 Flowchart for Replacement of the Original-type Air Compressor

(Rev. 2004) *All information subject to change without notice.*
6SE483 0401 Copyright © 2004 DETROIT DIESEL CORPORATION

10.1.5 Cleaning and Removal of the Original-type Air Compressor

Precleaning is not necessary.

Remove the air compressor as follow:

1. Disconnect the air lines to and from the compressor.
2. Disconnect the fuel pump lines.
3. Remove the fuel pump and drive coupling. Refer to section 2.8.2.
4. Drain the cooling system. Refer to section 13.13.4.
5. Disconnect and drain the coolant supply and return lines at the air compressor.
6. Disconnect the lubricating oil supply line from the compressor.
7. Remove the bolts securing the air compressor support bracket to the cylinder block and air compressor.
8. Remove the support bracket.

NOTE:
Due to the cylinder block and compressor configuration, the upper inside air compressor-to-air compressor drive bolt is difficult to reach with standard tools. Compressor Wrench,J 35948, will facilitate removal and installation of this bolt.

9. Remove the five bolts that secure the air compressor to the air compressor drive assembly.
10. Slide the air compressor rearward to disengage the hub from the coupling.

10.1.6 Inspection of Former Air Compressor

Refer to OEM guidelines to determine if the air compressor needs to be repaired or replaced.

 Copyright © 2004 DETROIT DIESEL CORPORATION

10.1.7 Pressure Relief Installation

Use the following procedure to install the air compressor pressure relief valve:

CAUTION:

To avoid injury before starting and running the engine, ensure the vehicle is parked on a level surface, parking brake is set, and the wheels are blocked.

1. Disconnect the battery terminals to prevent accidental engine start-up.
2. Carefully relieve air compressor system pressure by slowly opening the air storage tank drain valve or by loosening an air line. Allow all pressure to drain from the system.
3. Remove an unused compressor discharge port plug on the top or side of the compressor head. See Figure 10-10.

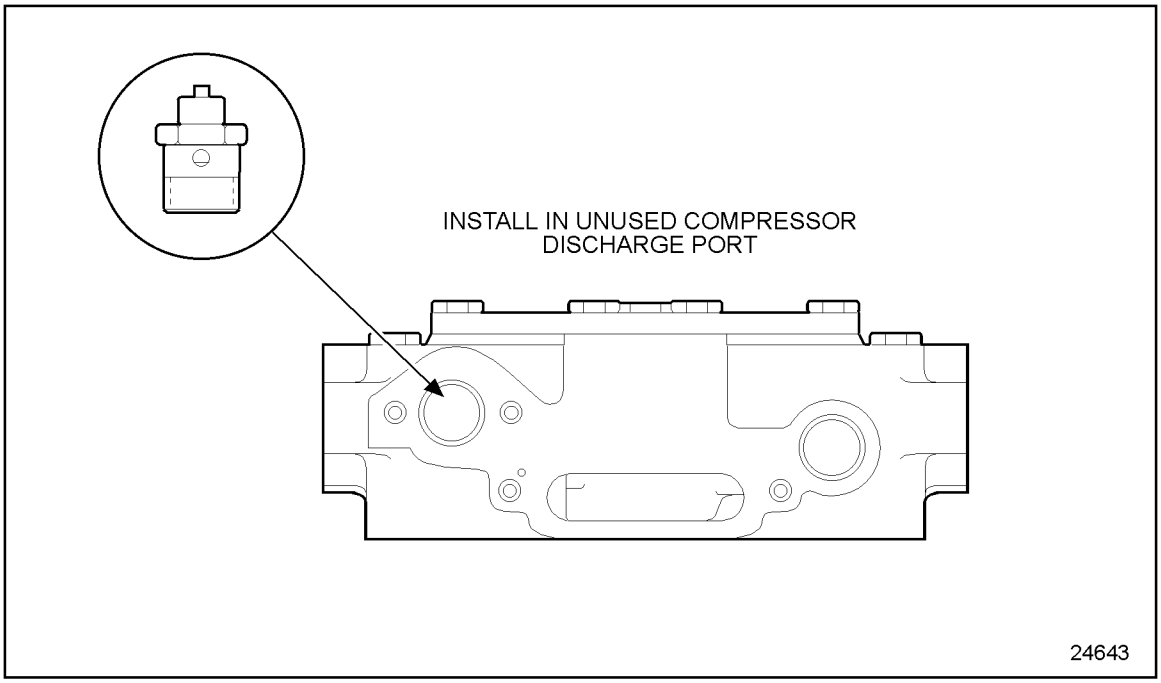

Figure 10-10 Location of Bendix Air Compressor Pressure Relief Valve

(Rev. 2004) *All information subject to change without notice.*
6SE483 0401 Copyright © 2004 DETROIT DIESEL CORPORATION

NOTICE:
To prevent possible damage to the valve, do not install with a crescent wrench or locking pliers and do not exceed required torque.

4. Threads on the pressure relief valve are precoated with sealant; so no additional sealant is required. Install the valve into the compressor port and, using a 7/8 in. (No. 14 metric) deep socket, carefully torque the valve to 23-31 N·m (17-23 lb·ft).
5. Close the air tank drain valve or retighten the air supply line, if previously loosened.
6. Refer to section 10.1.3 for the exhaust caution before preceeding. Reconnect the battery terminals, start the engine, and check for leaks.

10.1.8 Installation of Former Air Compressor

Install the air compressor as follows:

1. Clean all gasket material from the mating surfaces of the air compressor and air compressor drive.
2. Using a new gasket, install the air compressor to the air compressor drive. Refer to section 10.3.1 for air compressor drive assembly replacement procedure. Mate the internal teeth of the drive hub with the external teeth of the coupling.
3. Align the bolt holes of the two components and install the air compressor-to-air compressor drive bolts. Torque the bolts to 101-126 N·m (75-93 lb·ft). Use compressor wrench J 35948 to tighten the upper-inside bolt.
4. Install the air compressor support bracket to the compressor and cylinder block. Torque the support bracket-to-air compressor bolts to 18-23 N·m (13-17 lb·ft).
5. Torque the support bracket-to-cylinder block bolts to 58-73 N·m (43-54 lb·ft).

 Copyright © 2004 DETROIT DIESEL CORPORATION

CAUTION:

To avoid injury from flying parts when working with components under spring tension, wear adequate eye protection (face shield or safety goggles).

6. Install the coolant supply and return lines from the cylinder block and connect to the air compressor using four spring type hose clamps.
7. Install the lubricating oil supply line to the compressor.

CAUTION:

The air inlet manifold contains combustible gas. To avoid injury from explosion, do not connect the air inlet manifold to any devices or lines external to the manifold.

8. Install the air lines to and from the compressor.
9. If the unit has a compressor-driven fuel pump, install the fuel pump. Refer to section 2.8.6.
10. Refer to section 13.13.4 to fill the cooling system.

(Rev. 2004) *All information subject to change without notice.*
6SE483 0401 Copyright © 2004 DETROIT DIESEL CORPORATION

10.2 AIR COMPRESSOR DRIVE HUB

The air compressor crankshaft will turn while removing or tightening the drive hub retaining nut unless some provision is made to hold it. One method is to weld a modified drive coupling to a support or base which can be anchored to the mounting flange of the compressor.

A Series 71 or 92 flywheel housing cover that matches the flange of the compressor makes an ideal base for the modified coupling. When positioned, the exterior splines of the coupling mesh with the internal splines of the drive hub and the assembly is secured to the compressor housing. The shaft is then kept from rotating when the nut is loosened or tightened, by the hub and key.

10.2.1 Replacement of Air Compressor Drive Hub

To replace the air compressor drive hub, perform the following procedure. See Figure 10-11.

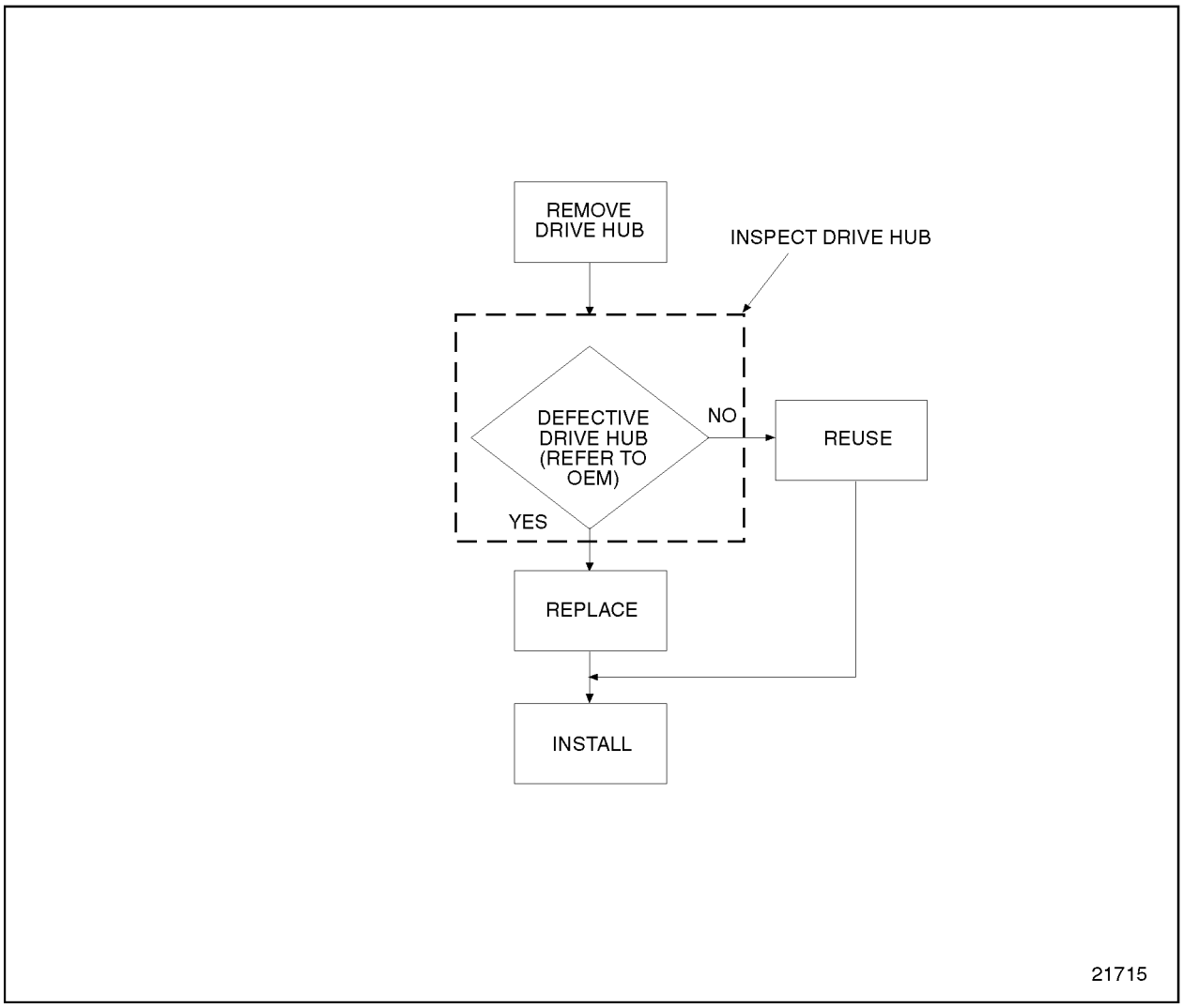

Figure 10-11 Flowchart for Replacement of Air Compressor Drive Hub

 Copyright © 2004 DETROIT DIESEL CORPORATION

10.2.2 Removal of Air Compressor Drive Hub

To keep the shaft from rotating, perform the following:

To properly position the cover and coupling with the drive hub, four collars, 19 mm O.D. and 12.7 mm I.D., 19 mm long (3/4 in. O.D. and 1/2 in. I.D., 3/4 in. long), and two pieces of bar stock 19 mm x 19 mm x 102 mm (3/4 in. x 3/4 in. x 4 in.) must be fabricated and welded to the flywheel housing cover at the positions shown in the next illustration. See Figure 10-12.

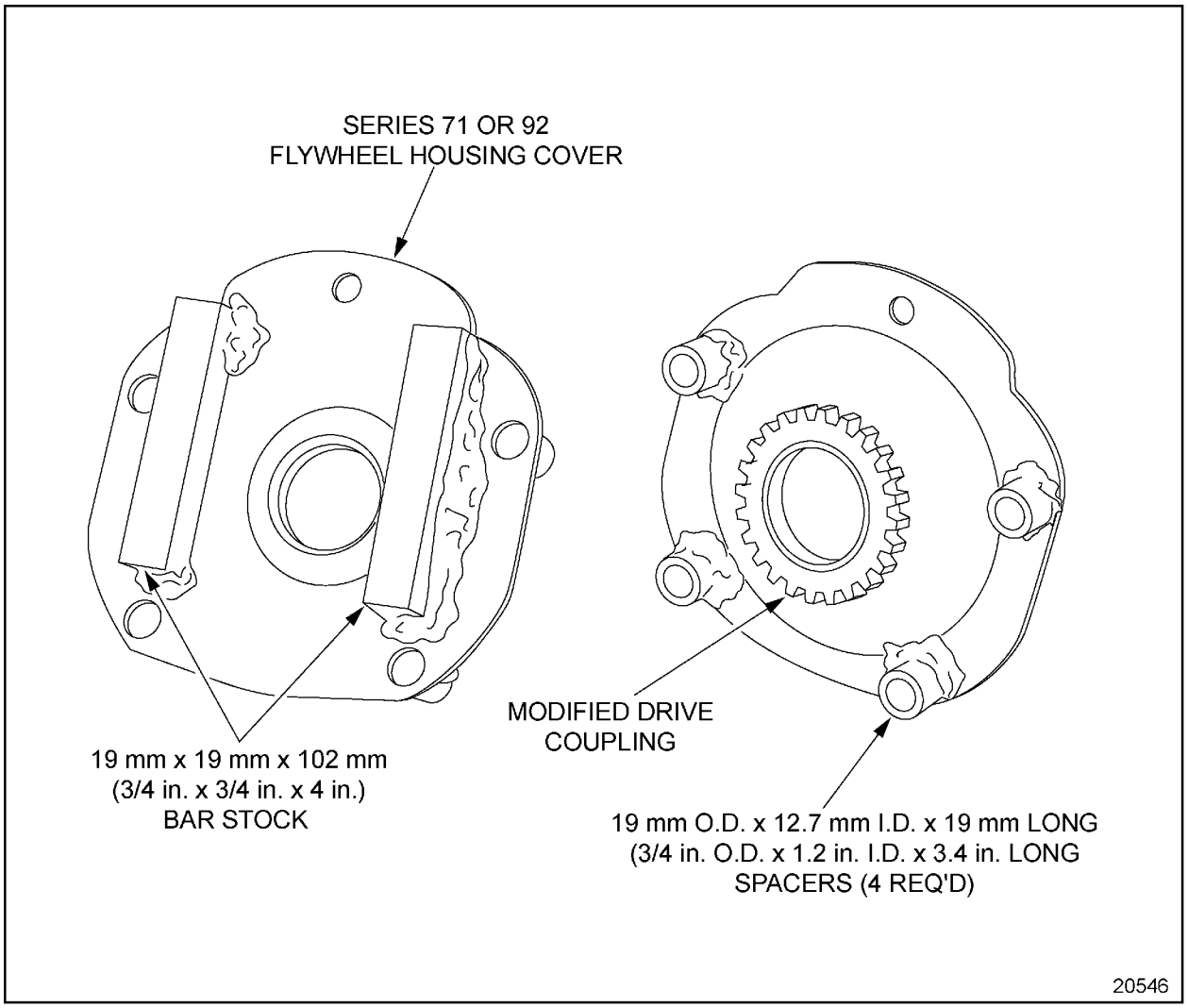

Figure 10-12 Holding Fixture

Position the coupling into the drive hub. Lay the flywheel housing cover over the coupling, center the collars over the compressor housing bolt holes, and tack weld the cover to the coupling.

The diameter of the cover hole must be opened up to the same diameter as the coupling inside diameter to permit access to the drive hub retaining nut. Two bolts will secure the base to the compressor during the operation.

(Rev. 2004) *All information subject to change without notice.*
6SE483 0401 Copyright © 2004 DETROIT DIESEL CORPORATION

Remove the air compressor drive hub as follows:

1. Install the holding fixture to the flange of the air compressor, engaging the coupling with the internal teeth of the drive hub. Install two bolts to secure the fixture to the compressor. See Figure 10-13.

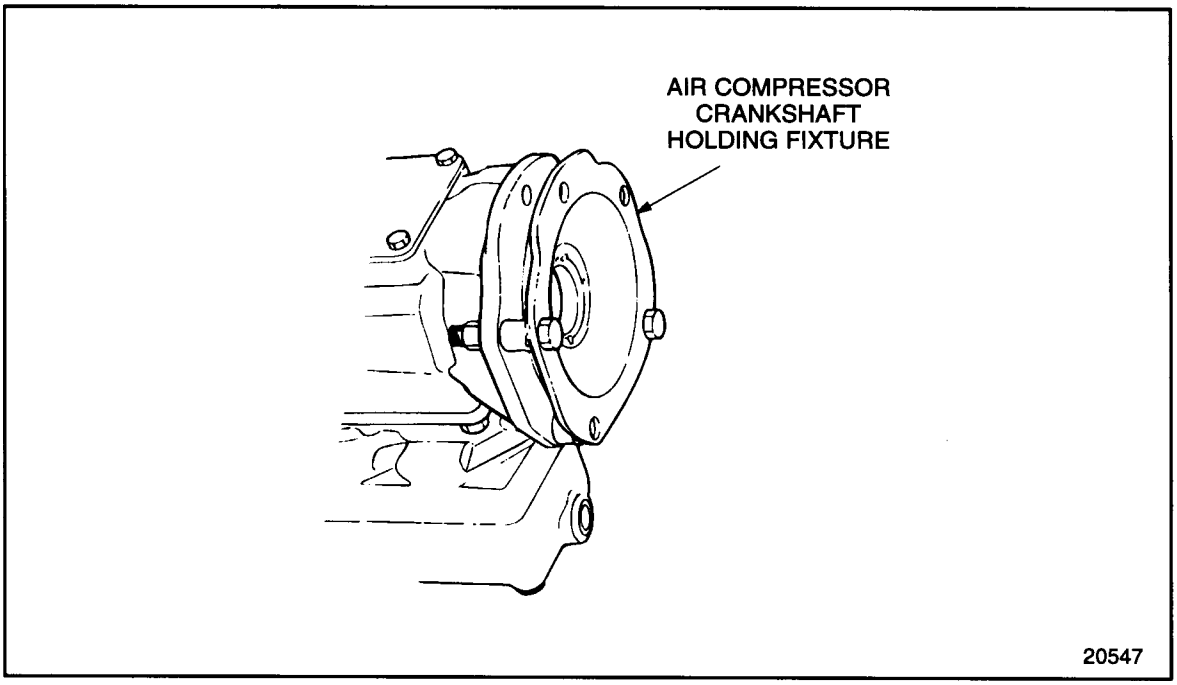

Figure 10-13 Air Compressor Crankshaft Holding Fixture Installation

2. Loosen and remove the drive hub retaining nut.
3. Remove the drive hub from the air compressor by lifting the hub off the shaft.

10.2.3 Inspection of Air Compressor Drive Hub

Refer to OEM guidelines to determine if the air compressor drive hub needs to be repaired or replaced.

 Copyright © 2004 DETROIT DIESEL CORPORATION

10.2.4 Installation of Air Compressor Drive Hub

Install the air compressor drive hub as follows:

NOTICE:
The drive hub and nut on the Series 60 engine have a unique configuration. Only the correct part numbers should be used.

1. Install the hub to the shaft as far as it will go by hand. Do not cock or jam the hub. See Figure 10-14.

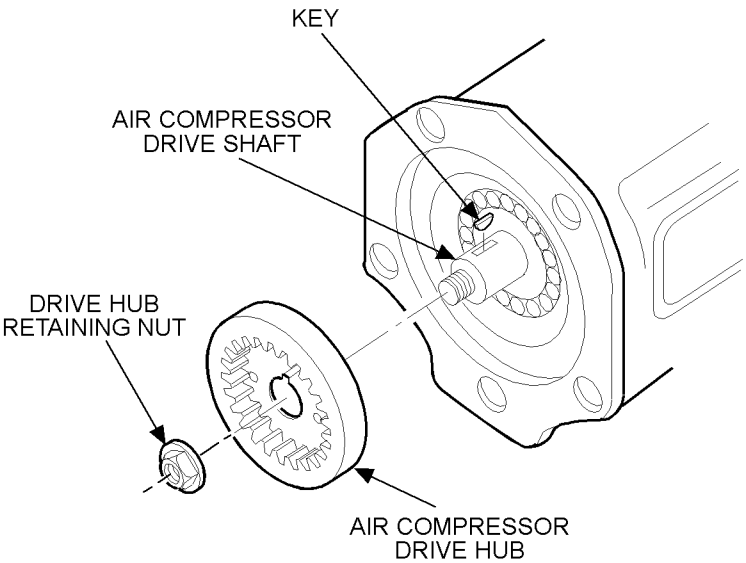

Figure 10-14 Air Compressor Drive Hub Assembly

2. Install the drive holding fixture to the flange of the air compressor, engaging the coupling with the internal teeth of the drive hub. Install two bolts to secure the fixture to the compressor. See Figure 10-13.

(Rev. 2004) *All information subject to change without notice.*
6SE483 0401 Copyright © 2004 DETROIT DIESEL CORPORATION

3. Torque the air compressor drive hub retaining nut to 300-345 N·m (220-255 lb·ft). See Figure 10-15.

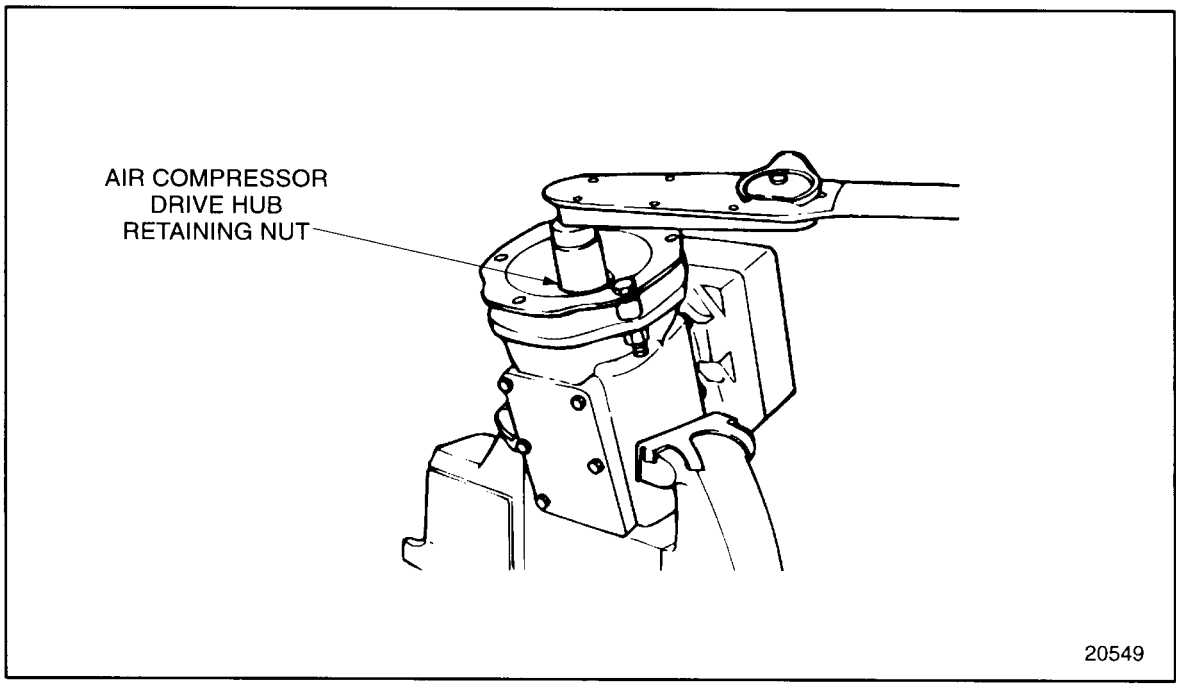

Figure 10-15 Torquing Drive Hub Retaining Nut

4. Loosen the two bolts that retain the holding fixture to the compressor flange, and remove the holding fixture.

 Copyright © 2004 DETROIT DIESEL CORPORATION

10.3 AIR COMPRESSOR/RAW WATER PUMP DRIVE ASSEMBLY

The air compressor/marine engine raw water pump drive assembly mounts to the rear of the gear case on the intake side of the engine. See Figure 10-16.

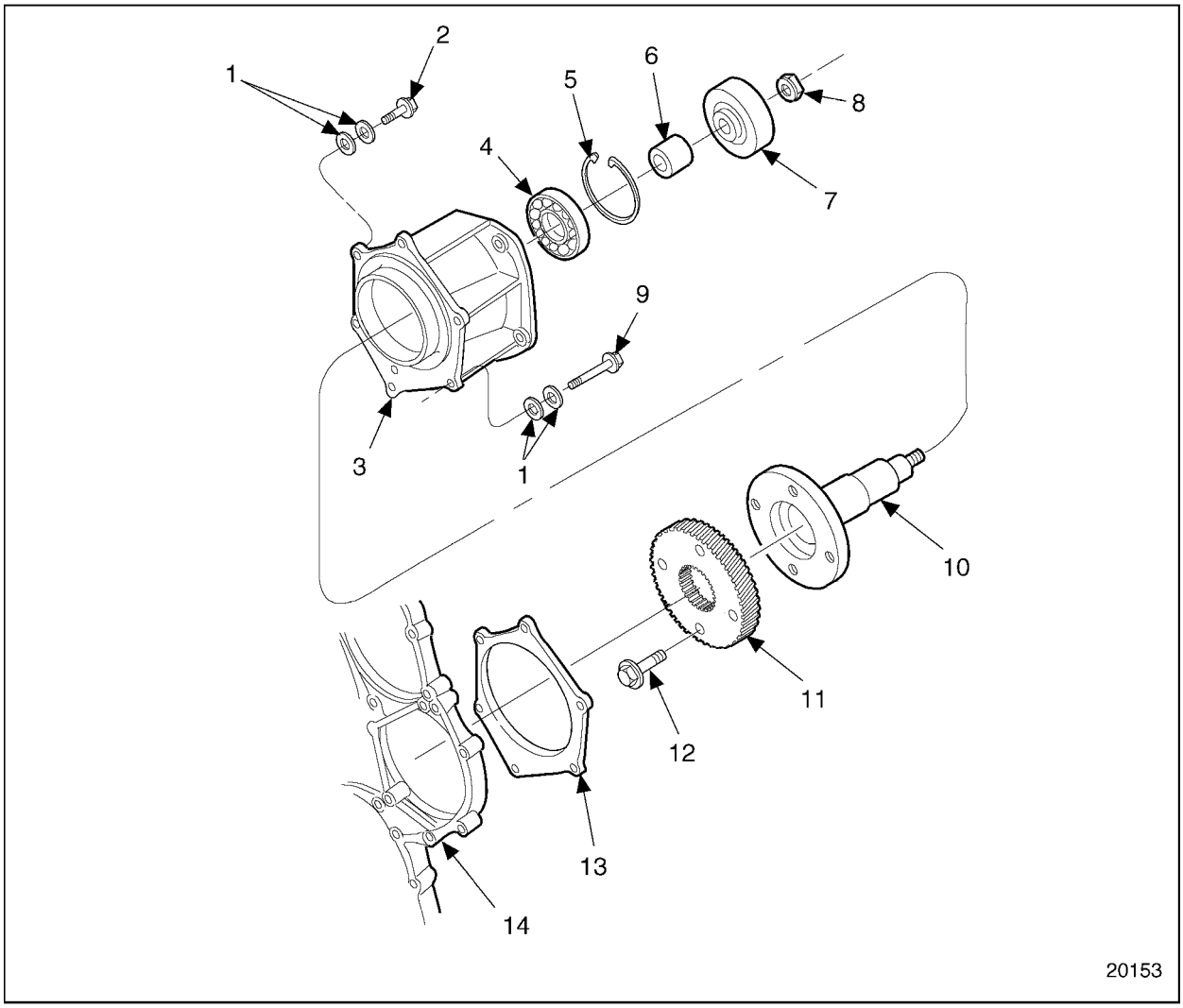

1. Plain Washers (Shims)
2. Short Bolt (1)
3. Housing, Drive
4. Ball Bearing, Air Compressor Drive
5. Snap Ring
6. Spacer
7. Hub, Drive
8. Flange Nut, Drive Hub
9. Long Bolt, Drive Housing
10. Shaft, Drive
11. Gear, Drive
12. Bolt, Drive Gear
13. Gasket
14. Gear Case

Figure 10-16 Air Compressor/Raw Water Pump Drive Detail and Location of Parts

(Rev. 2004) *All information subject to change without notice.*
6SE483 0401 Copyright © 2004 DETROIT DIESEL CORPORATION

A drive gear meshes with the bull gear and is driven at a ratio of 1.19:1.

The drive gear is bolted to the air compressor /raw water pump drive shaft. A drive hub is installed onto the opposite end of the air compressor drive shaft, and is used to drive the air compressor or raw water pump. On vehicles with power steering, a short splined coupling connects the drive gear to the power steering pump. The coupling is inserted in the splined center of the air compressor drive gear.

Two composition gaskets are used, one to seal the air compressor drive housing to the gear case, and one to seal the air compressor or raw water pump to the drive housing.

Two air compressor drives have been used on Series 60 engines. The current drive assembly, see Figure 10-16, differs from the former, see Figure 10-17, in that it does not have an external oil supply, and only one bearing assembly is used to support the drive shaft.

 Copyright © 2004 DETROIT DIESEL CORPORATION

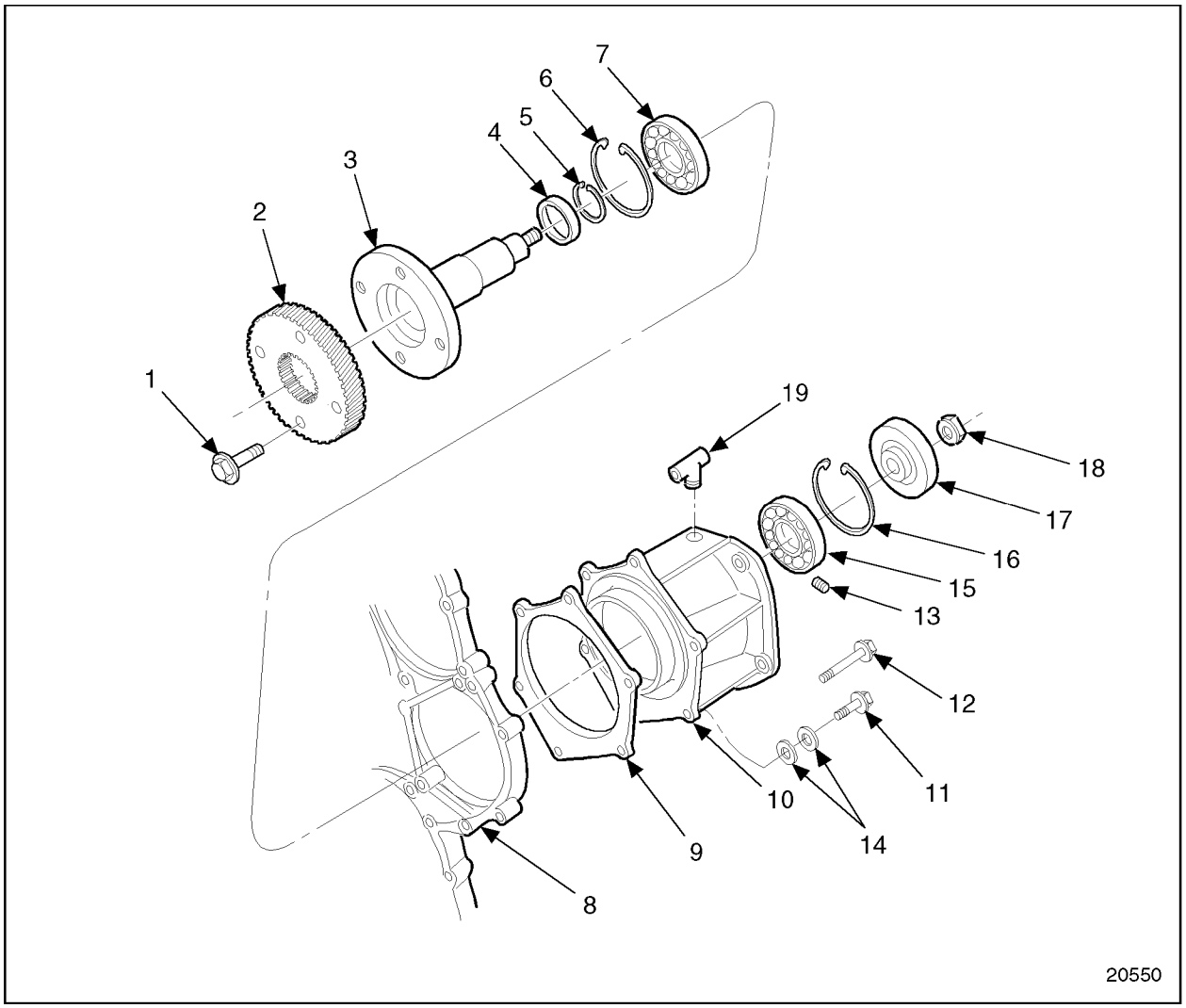

1. Bolt, Air Compressor Drive Gear
2. Gear, Air Compressor Drive
3. Shaft, Air Compressor Drive
4. Inner Race Bearing
5. Small Snap Ring
6. Large Snap Ring
7. Front Roller Bearing
8. Gear Case
9. Gasket
10. Housing, Air Compressor Drive
11. Short Bolt (1)
12. Long Bolt, Air Compressor Drive Housing
13. Plug, Air Compressor Housing
14. Plain Washers (Shims)
15. Rear Roller Bearing
16. Large Snap Ring
17. Hub, Air Compressor Drive
18. Flange Nut, Air Compressor Drive Hub
19. "T" Fitting

Figure 10-17 Former Air Compressor Drive Detail and Location of Parts

Disassembly and assembly of the two drives are similar. Differences in the disassembly and assembly procedures are detailed in this section.

(Rev. 2004) *All information subject to change without notice.*
6SE483 0401 Copyright © 2004 DETROIT DIESEL CORPORATION

10.3.1 Replacement of Air Compressor/Raw Water Pump Drive Assembly

To replace the air compressor/raw water pump drive assembly, perform the following procedure. See Figure 10-18.

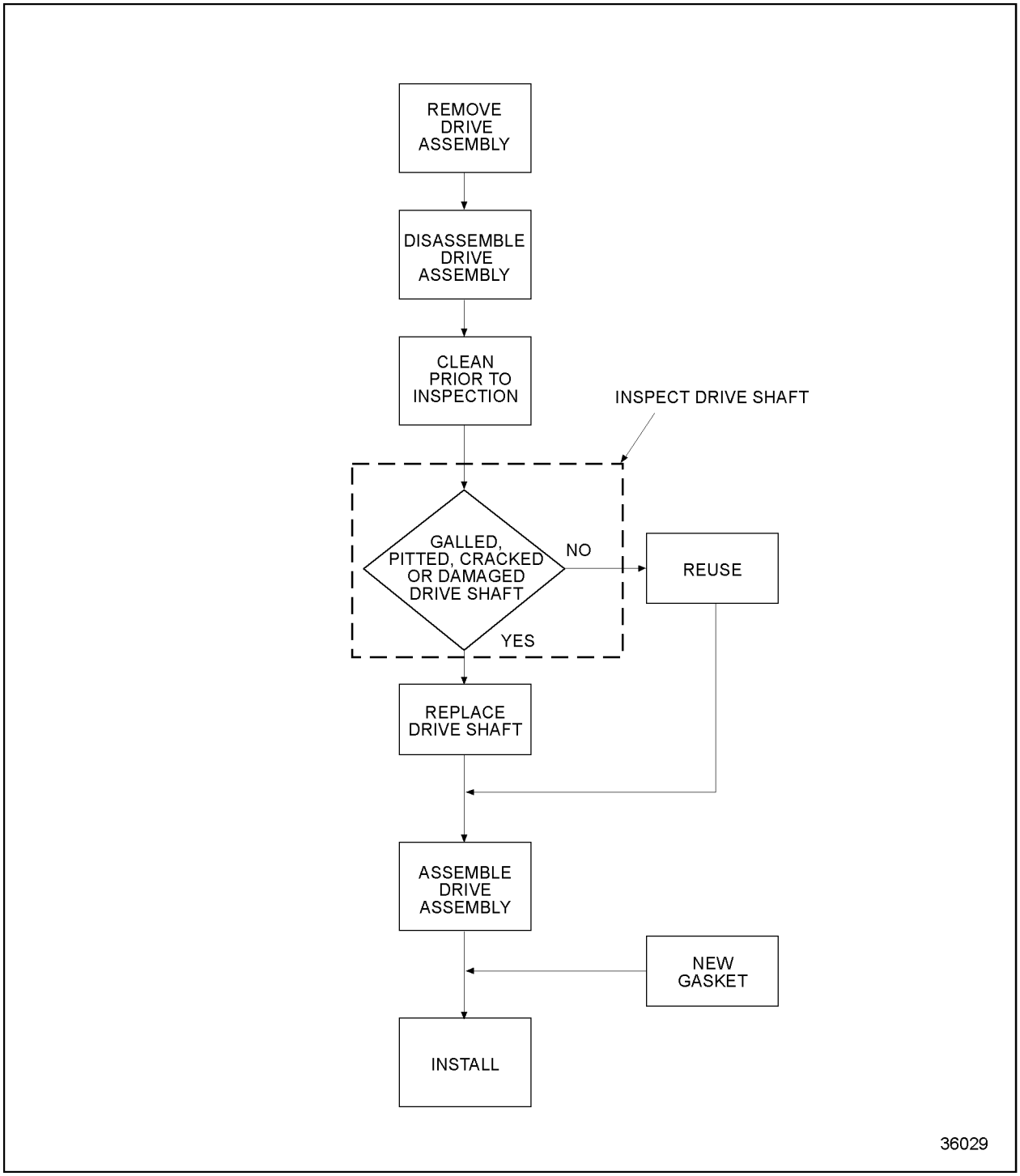

Figure 10-18 Flowchart for Replacement of Air Compressor/Raw Water Pump Drive Assembly

 Copyright © 2004 DETROIT DIESEL CORPORATION

10.3.2 Removal of Air Compressor/Raw Water Pump Drive Assembly

Remove the drive assembly as follows:

1. If equipped, remove the air compressor or raw water pump. Refer to section 10.1.5 and refer to section 4.4.
2. If equipped with power steering, loosen and remove the five bolts securing the power steering pump and cover assembly to the gear case cover.
3. Remove the pump and cover assembly.
4. Remove the power steering drive coupling from the air compressor /raw water pump drive gear.
5. Disconnect the oil supply lines from the "T" fitting, if applicable, at the top of the air compressor /raw water pump drive housing. See Figure 10-17.
6. Remove the six bolts that secure the drive assembly to the gear case.
7. Remove the assembly by pulling it straight out of the gear case.

10.3.3 Disassembly of Air Compressor/Raw Water Pump Drive Assembly

Disassemble the drive assembly as follows:

1. Secure the holding fixture, see Figure 10-12, in a suitable vise with the drive coupling facing up. See Figure 10-19.

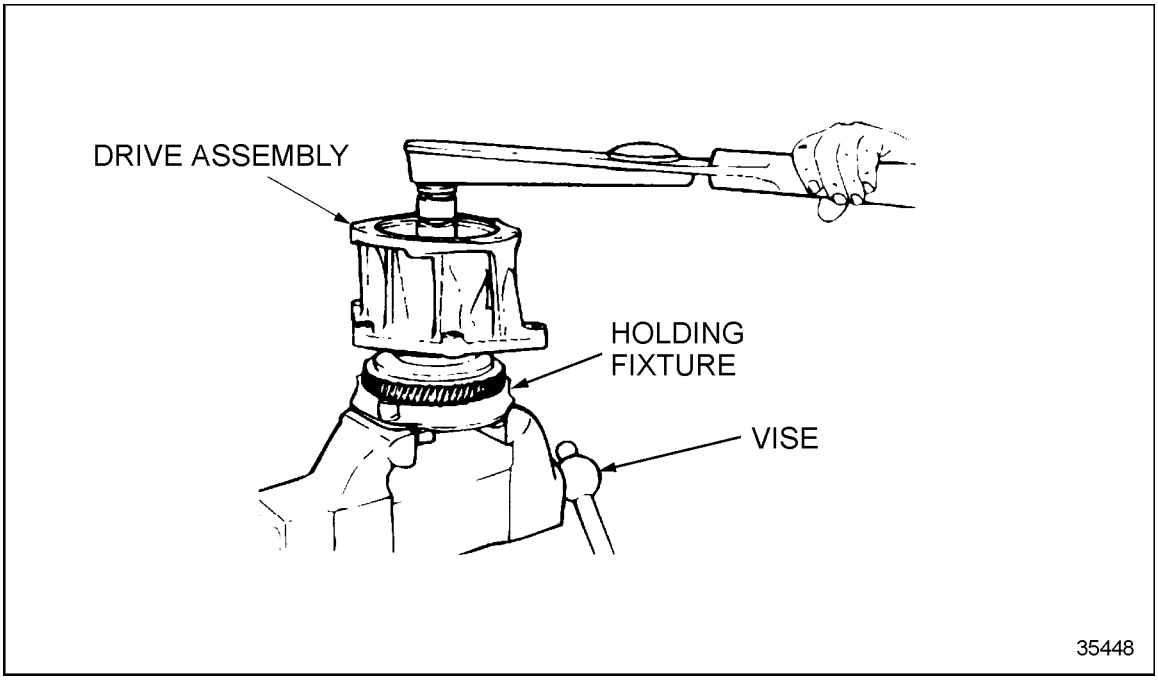

Figure 10-19 Air Compressor/Raw Water Pump Drive Hub Disassembly

(Rev. 2004) *All information subject to change without notice.*
6SE483 0401 Copyright © 2004 DETROIT DIESEL CORPORATION

2. Position the drive assembly onto the holding fixture, engaging the internal teeth of the drive gear with the coupling on the holding fixture.
3. Loosen and remove the flanged nut retaining the drive hub to the drive shaft.
4. Remove the drive hub from the drive assembly.
5. Remove the spacer from the drive shaft (current air compressor/raw water pump drive only).
6. Remove the drive assembly from the holding fixture and place on bench.
7. Remove the four bolts that secure the drive gear to the drive shaft flange and remove gear.
8. Use the air compressor and fan drive service tool set, J 36310-A, for disassembly. See Figure 10-20.

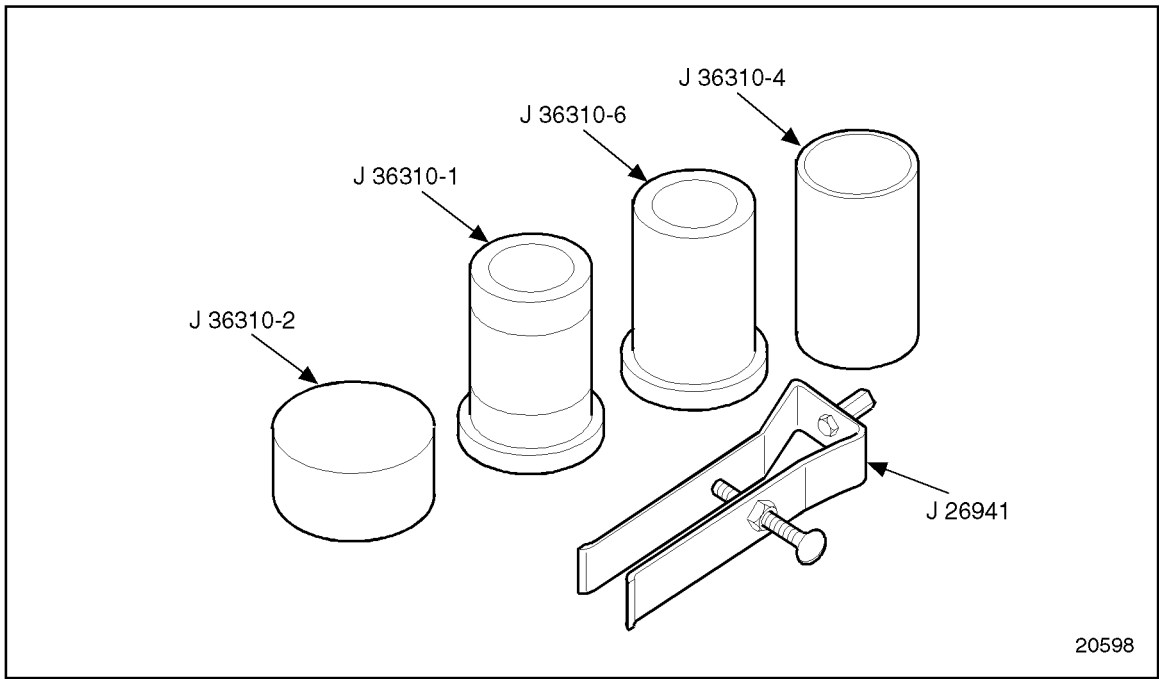

Figure 10-20 Air Compressor and Fan Drive Service Tool Set

9. Support the air compressor/raw water pump drive housing on press plates with the drive hub side facing up.
10. Press the drive shaft out of the drive housing.

NOTE:
Whenever the drive shaft is removed from the housing, the ball bearing assembly must be replaced.

 Copyright © 2004 DETROIT DIESEL CORPORATION

11. Remove the large snap ring retaining the ball bearing in the drive hub housing using snap ring pliers. See Figure 10-21.

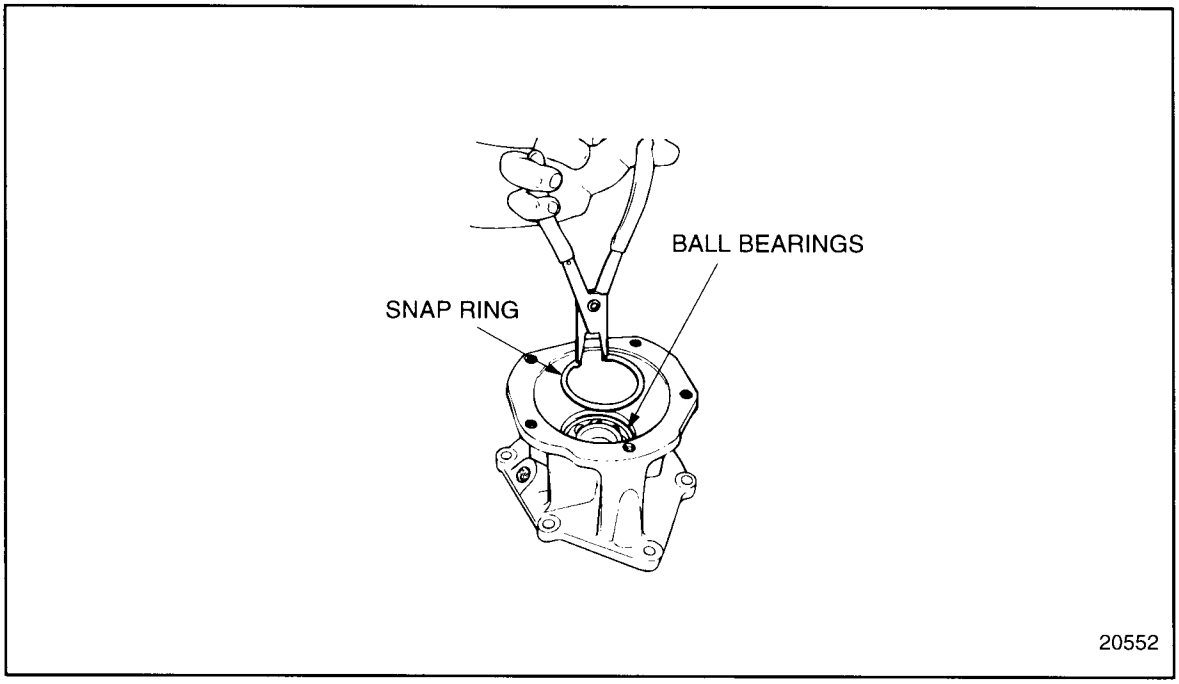

Figure 10-21 Roller Bearing Snap Ring Removal

12. On current design drive only, turn the drive housing over and support it on the press bed.
13. Using the narrow end of J 36310-6 part of J 36310–A, against the bearing, press the bearing from the housing.
14. Discard the bearing.

NOTE:
The next seven steps apply only to the former design air compressor drive.

(Rev. 2004) *All information subject to change without notice.*
6SE483 0401 Copyright © 2004 DETROIT DIESEL CORPORATION

15. Using the snap ring pliers, turn the drive assembly over, and remove the large snap ring retaining the roller bearing in the air compressor drive housing. See Figure 10-22.

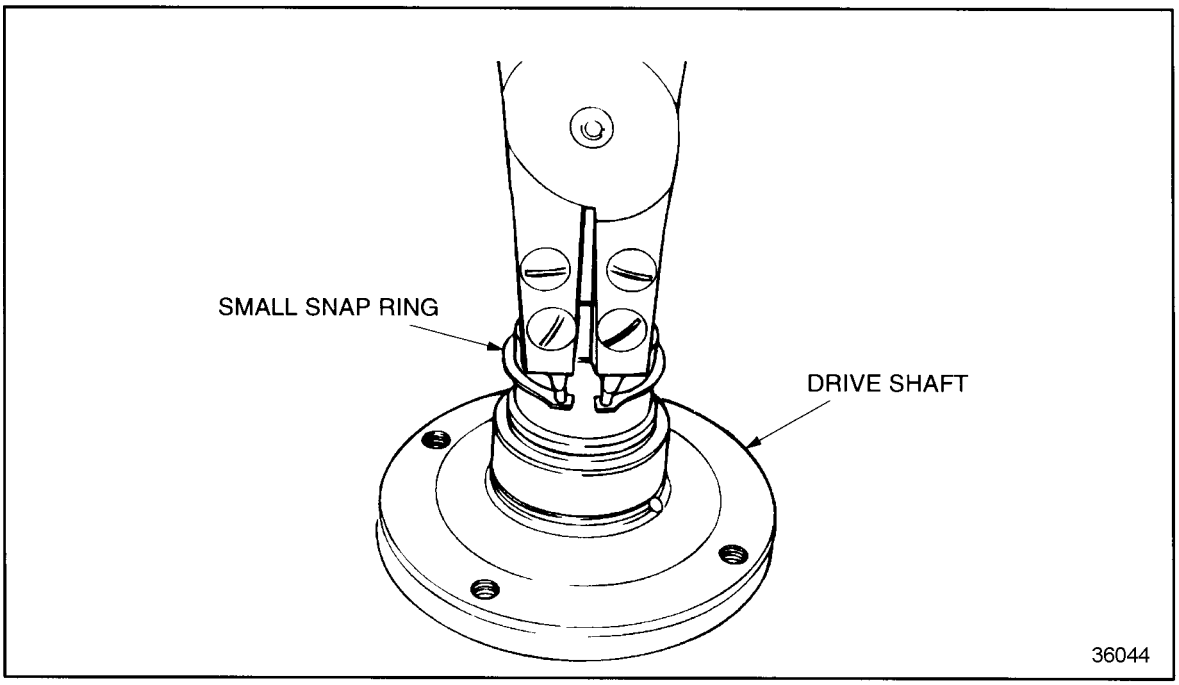

Figure 10-22 Ball Bearing Snap Ring Removal

NOTE:
Whenever the bearings are removed from the housing, the bearing assemblies must be replaced.

 Copyright © 2004 DETROIT DIESEL CORPORATION

16. Install J 26941, under the bearing. See Figure 10-23.

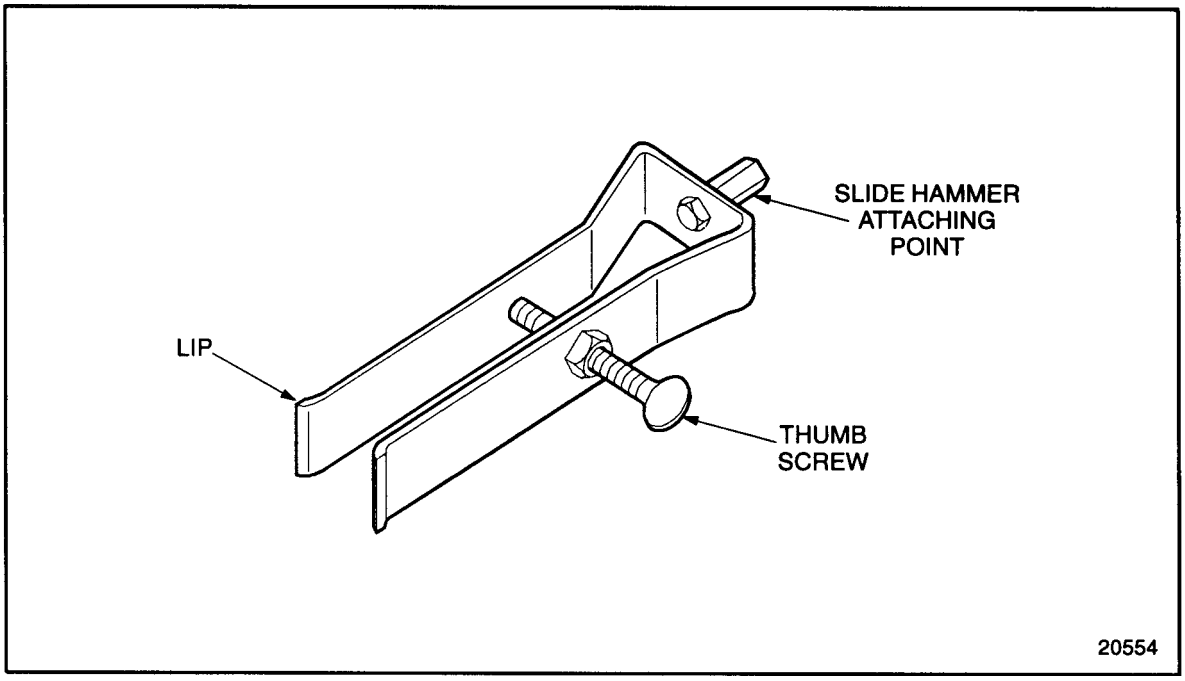

Figure 10-23 Bearing Remover

17. Tighten the thumb screw on the bearing remover until it is snug against the bearing.
18. Install a suitable slide hammer to the top of the bearing remover. Remove the bearing.
19. Repeat this procedure to remove the other bearing from the housing.

(Rev. 2004) *All information subject to change without notice.*
6SE483 0401 Copyright © 2004 DETROIT DIESEL CORPORATION

20. Using snap ring pliers, remove the small snap ring retaining the roller bearing inner race on the air compressor drive shaft. See Figure 10-24.

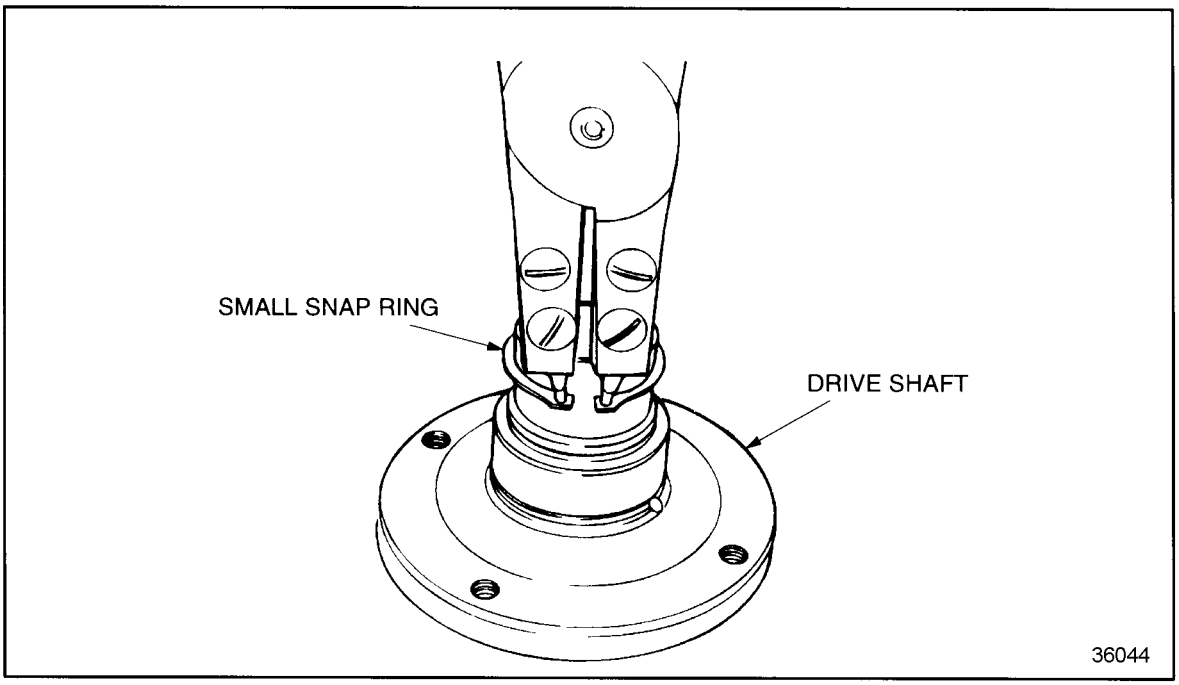

Figure 10-24 Roller Bearing Inner Race Snap Ring Removal

 Copyright © 2004 DETROIT DIESEL CORPORATION

21. Using a punch and hammer, work through the two access holes to drive the roller bearing inner race from the air compressor drive shaft. See Figure 10-25.

NOTE:
Whenever the roller bearing inner race is removed from the shaft, the roller bearing assembly must be replaced.

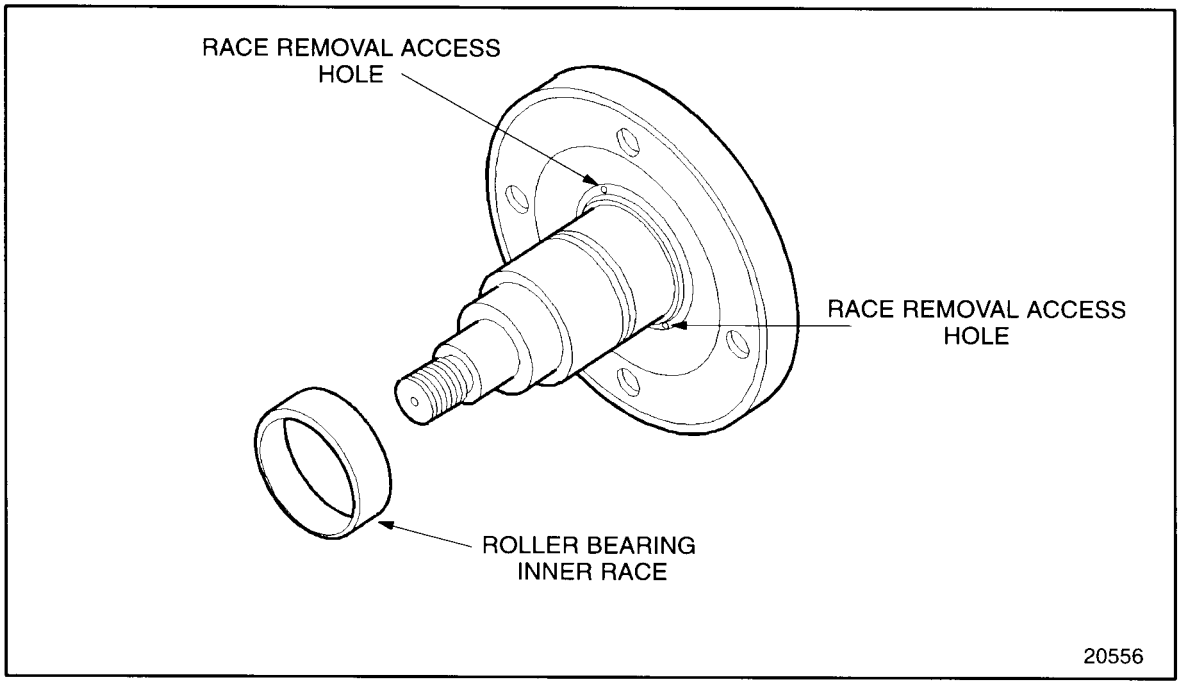

Figure 10-25 Bearing Inner Race Removal

10.3.4 Cleaning of Air Compressor/Raw Water Pump Drive Assembly

Clean the air compressor/raw water pump drive assembly prior to inspection as follows:

1. Clean all of the parts with clean fuel oil.

⚠ CAUTION:

To avoid injury from flying debris when using compressed air, wear adequate eye protection (face shield or safety goggles) and do not exceed 40 psi (276 kPa) air pressure.

2. Dry with compressed air.

(Rev. 2004) *All information subject to change without notice.*
6SE483 0401 Copyright © 2004 DETROIT DIESEL CORPORATION

10.3.4.1 Inspection of the Air Compressor Drive Assembly

Inspect the air compressor drive assembly as follows:

1. Visually inspect the drive shaft for galling, pitting, cracks, or other damage.
   [a] If drive shaft has galling, pitting, cracks, or other damage, replace with new part.
   [b] If drive shaft has no damage, reuse part.

10.3.5 Assembly of Air Compressor/Raw Water Pump Drive Assembly

Assemble the air compressor/raw water pump drive assembly as follows:

NOTE:
The first four steps apply to the former air compressor drive assembly only. If rebuilding a current design air compressor/raw water pump drive assembly, begin with step 5.

1. Install the roller bearing inner race to the air compressor drive shaft using a press and J 36310-4, part of J 36310–A. See Figure 10-26.

NOTE:
The identification numbers on the race must face the installer. Be sure the race is firmly seated against the shoulder on the drive shaft.

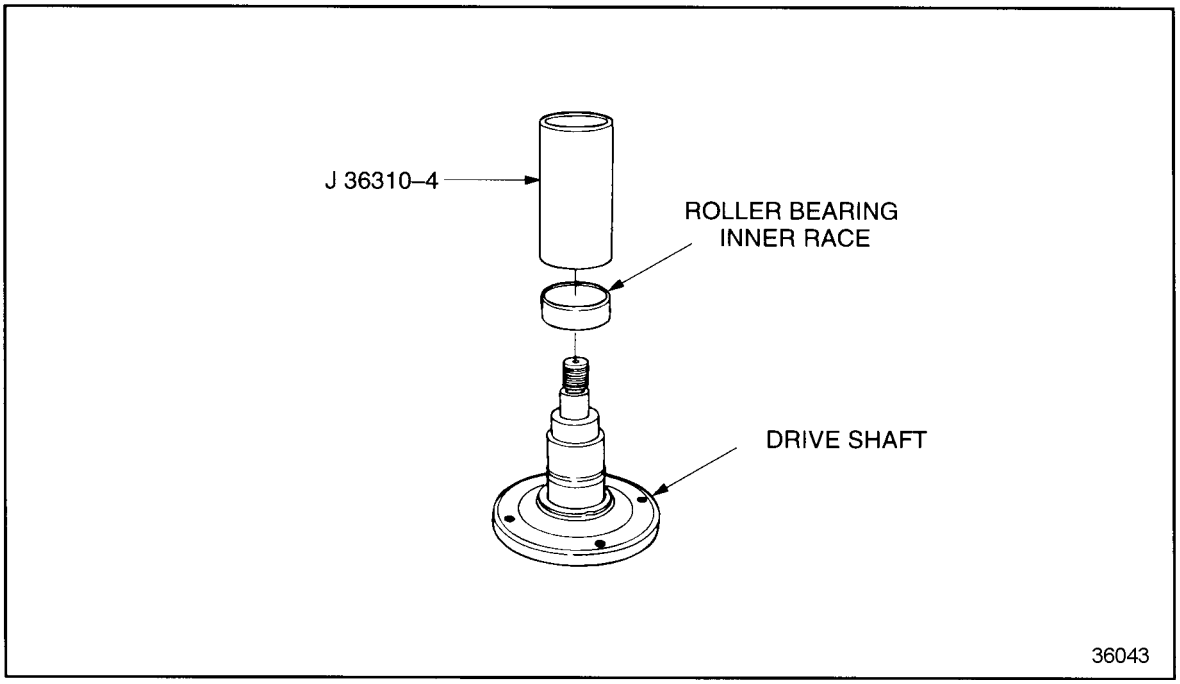

Figure 10-26 Bearing Inner Race Installer

 Copyright © 2004 DETROIT DIESEL CORPORATION

2. Install the small snap ring to the drive shaft using snap ring pliers.

NOTE:
Ensure the snap ring is fully seated in its groove on the drive shaft. See Figure 10-27.

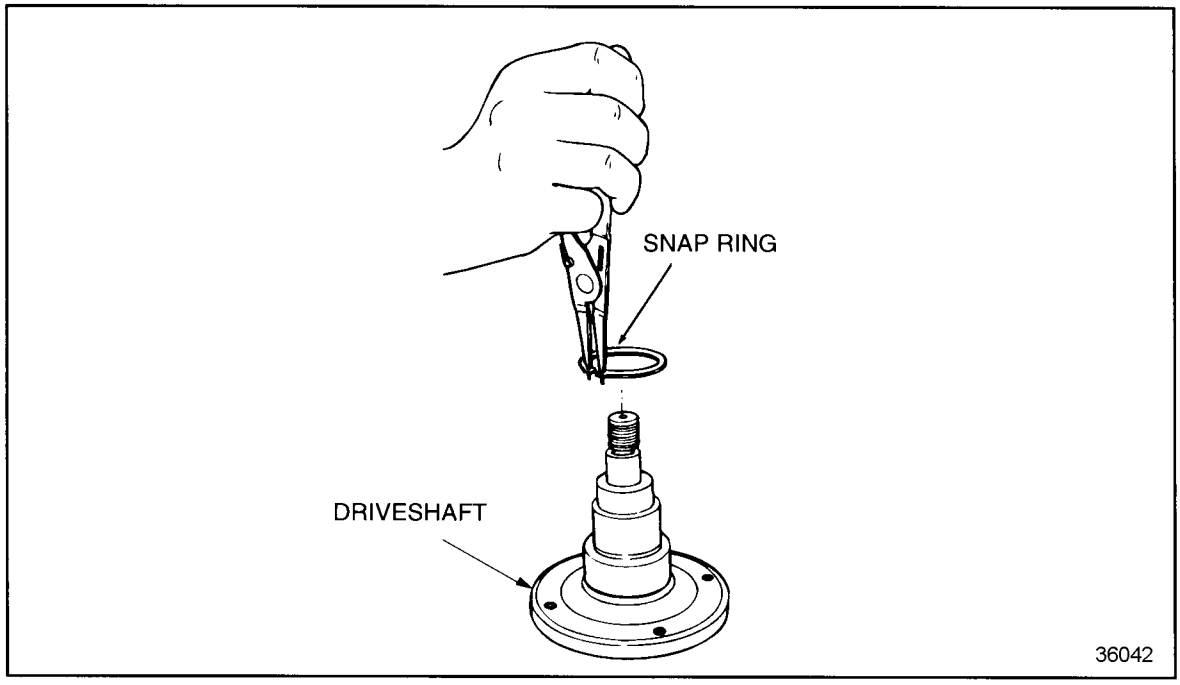

Figure 10-27 Bearing Inner Race Snap Ring Installation

(Rev. 2004) *All information subject to change without notice.*
6SE483 0401 Copyright © 2004 DETROIT DIESEL CORPORATION

3. Install the roller bearing in the air compressor drive housing using J 36310-2, part of J 36310–A . Ensure that the bearing is fully seated in the housing far enough for the snap ring to be installed. See Figure 10-28.

NOTE:
The bearing identification numbers must face the installer.

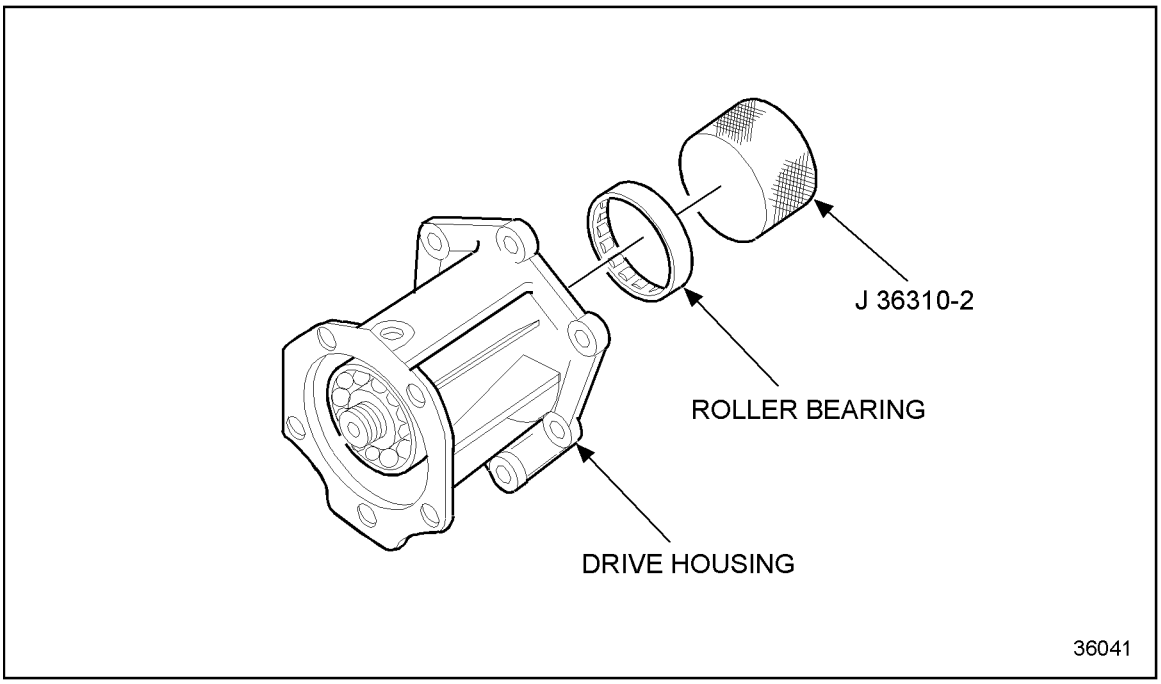

Figure 10-28 Roller Bearing Installation

 Copyright © 2004 DETROIT DIESEL CORPORATION

4. Install the snap ring retaining the roller bearing in the drive housing using snap ring pliers. See Figure 10-29.

NOTE:
Ensure the snap ring is fully seated in its groove in the housing.

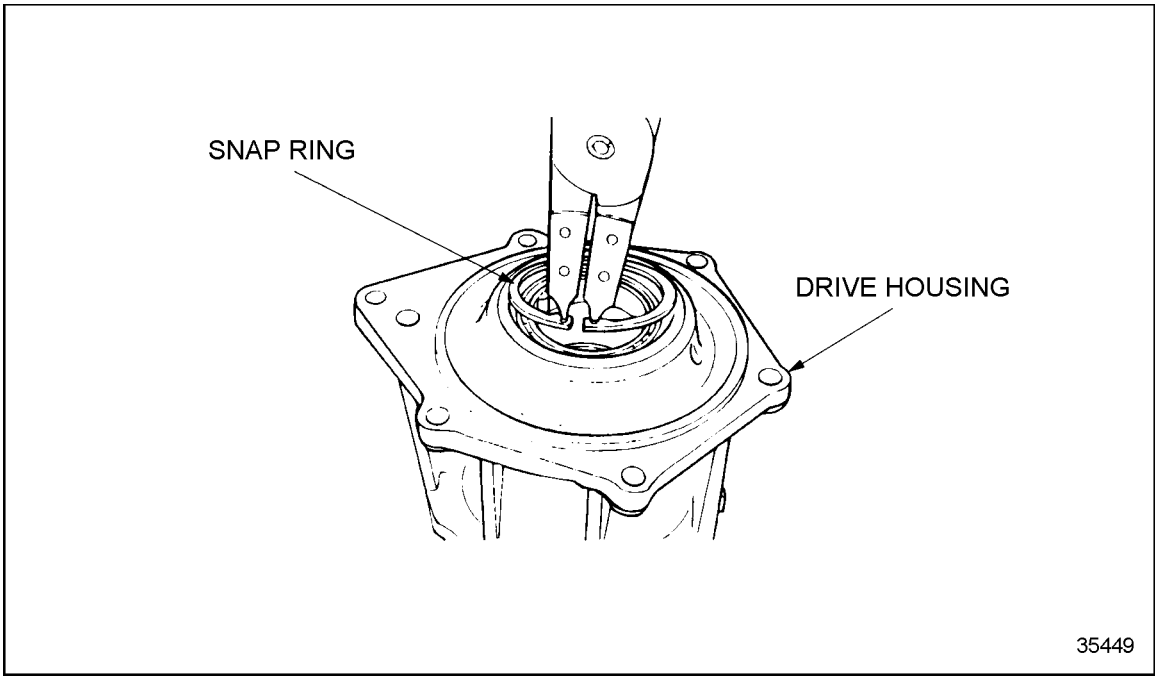

Figure 10-29 Snap Ring Installation

NOTE:
The first four steps apply to the former air compressor drive assembly only. If rebuilding a current design air compressor/raw water pump drive assembly, begin with the following step.

5. Turn the housing over.
6. Install the ball bearing in the drive housing using a press and the large end of the ball bearing installer, pressing only on the outer race of the bearing. See Figure 10-30.

NOTE:
There is a plastic sleeve in the current design ball bearing which must not be removed when installing the bearing. The sleeve will be pushed out when the drive shaft is installed.

(Rev. 2004) *All information subject to change without notice.*
6SE483 0401 Copyright © 2004 DETROIT DIESEL CORPORATION

7. Be sure the bearing is fully seated against the shoulder in the housing for the snap ring to be installed. See Figure 10-30.

NOTE:
The bearing identification numbers must face the installer when installing the bearing.

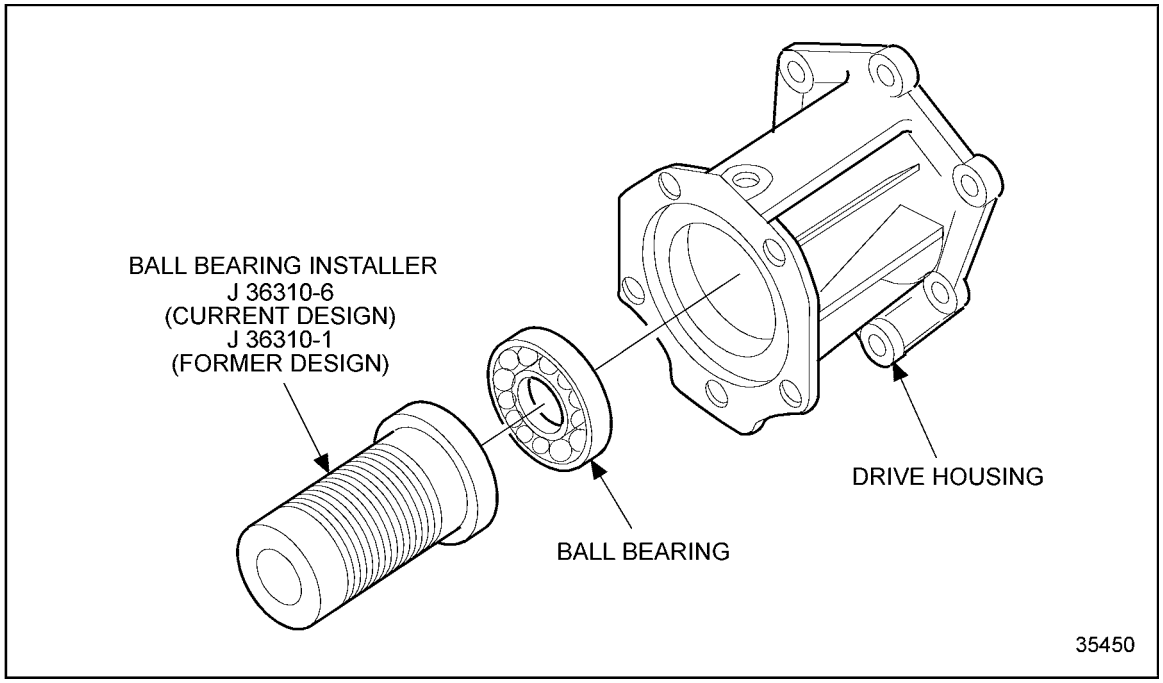

Figure 10-30 Ball Bearing Installation

 Copyright © 2004 DETROIT DIESEL CORPORATION

8. Install the snap ring retaining the ball bearing in the housing using snap ring pliers. See Figure 10-31.

NOTE:
Ensure the snap ring is fully seated in its groove in the housing.

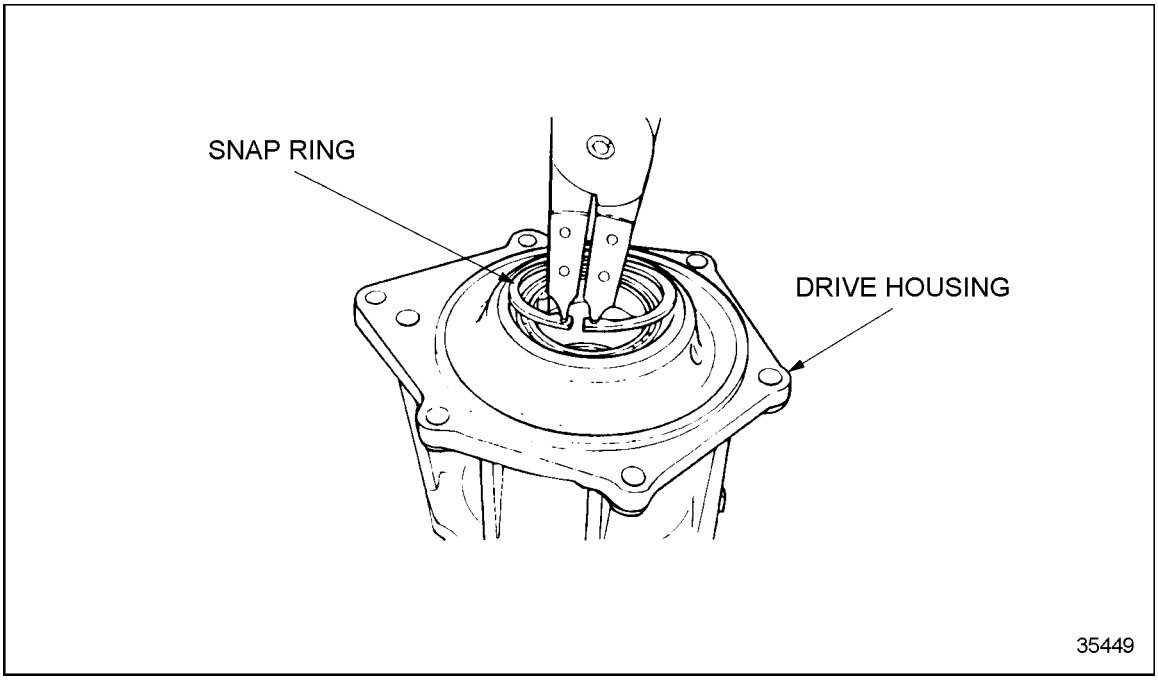

Figure 10-31 Snap Ring Installation

(Rev. 2004) *All information subject to change without notice.*
6SE483 0401 Copyright © 2004 DETROIT DIESEL CORPORATION

9. Lubricate the roller bearing inner race with clean engine oil. See Figure 10-32.

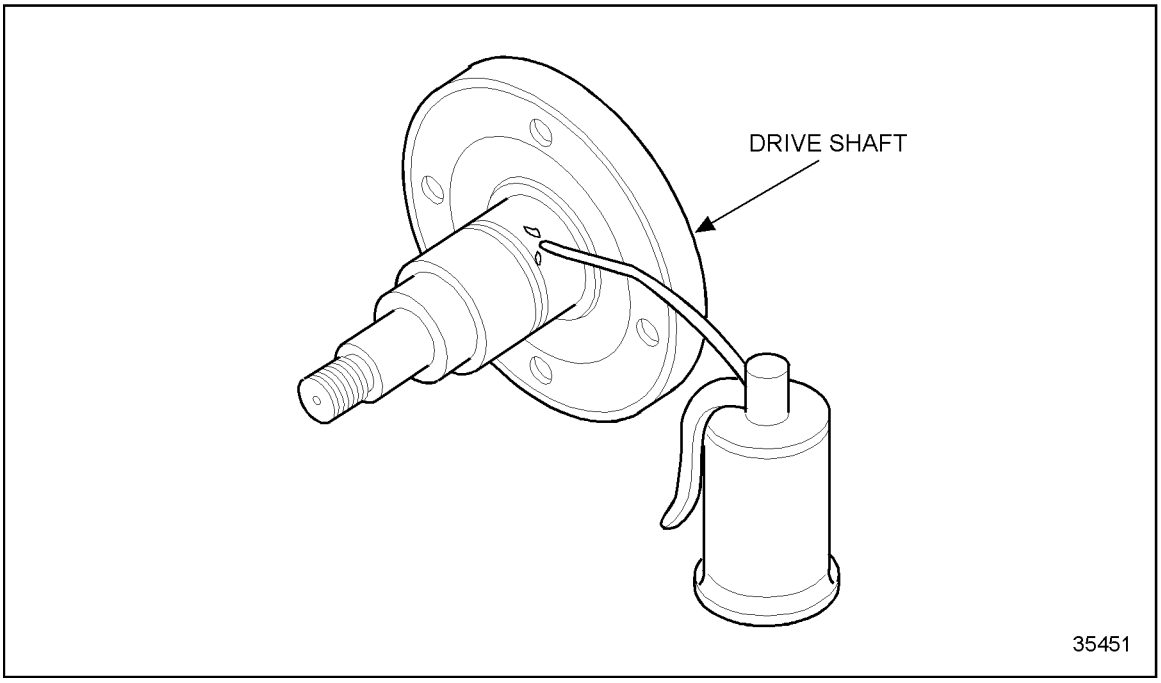

Figure 10-32 Bearing Inner Race Lubrication

10. Place the drive shaft, flange side down, on a press bed.
11. Carefully position the drive housing over the shaft, and lower the housing down as far as it will go without forcing it.

 Copyright © 2004 DETROIT DIESEL CORPORATION

12. Place the small end of the ball bearing installer, J 36310-1 part of J 36310–A, against the ball bearing inner race. Press the ball bearing and housing down onto the drive shaft until the ball bearing inner race is firmly seated against the shoulder of the drive shaft. See Figure 10-33.

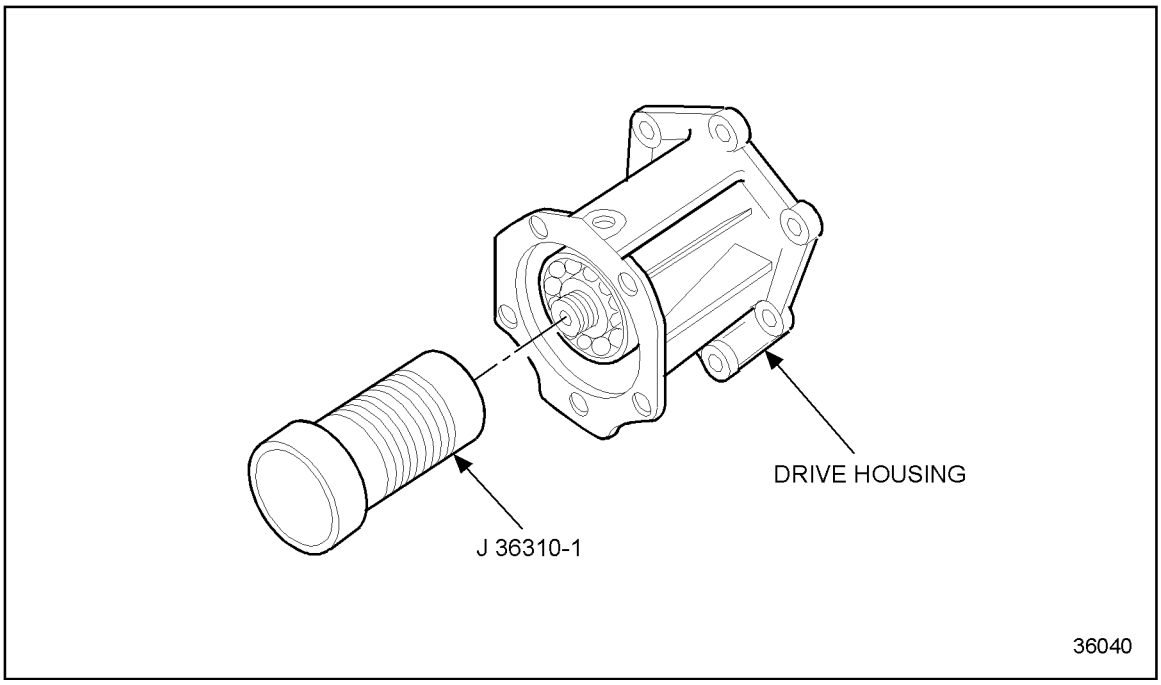

Figure 10-33 Air Compressor Drive Shaft Installation (Former Design)

NOTE:
The previous four steps apply to the former design air compressor drive only. If assembling a current design air compressor/raw water pump drive, go to the next step.

(Rev. 2004) *All information subject to change without notice.*
6SE483 0401 Copyright © 2004 DETROIT DIESEL CORPORATION

13. Place wide end of ball bearing installer, J 36310-6, part of J 36310–A, on press bed. See Figure 10-34.

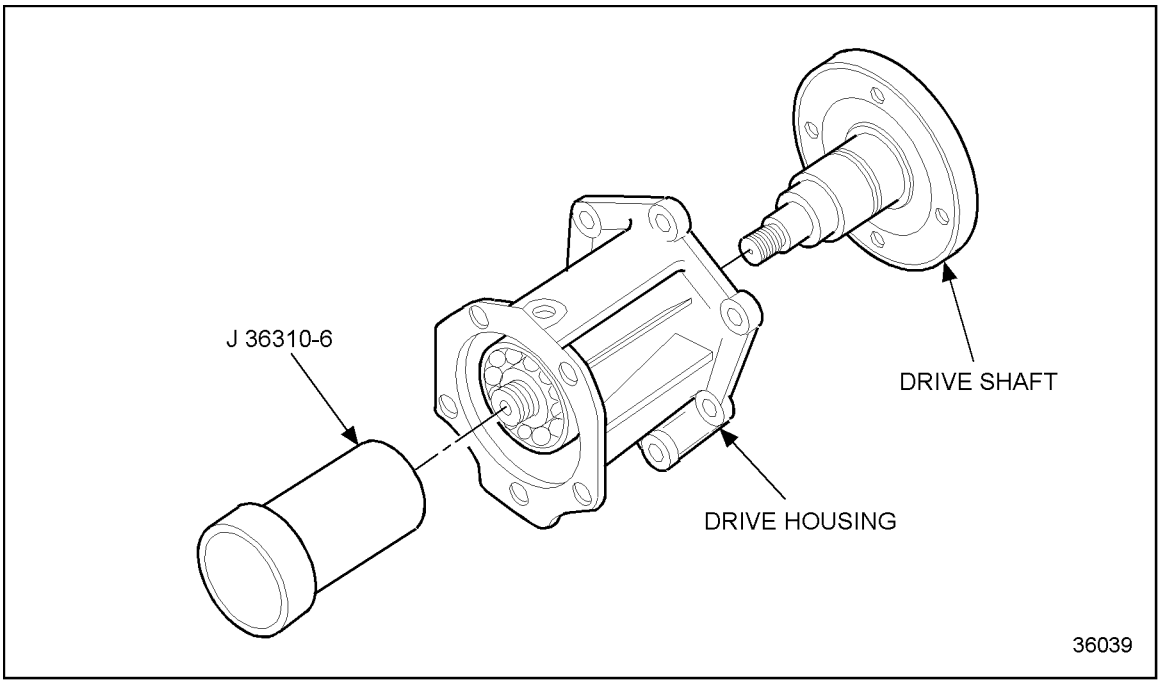

Figure 10-34 Air Compressor/Raw Water Pump Drive Shaft Installation (Current Design)

14. Place the drive housing on the bearing installer, ensuring that the installer is centered on the bearing inner race.
15. Position the drive shaft in the bearing inner race.
16. Press the drive shaft into the bearing and housing assembly until the shaft shoulder is seated against the bearing inner race.
17. Remove the drive assembly from the tool, and remove the plastic sleeve from inside the tool.
18. Discard the plastic sleeve.

 Copyright © 2004 DETROIT DIESEL CORPORATION

19. Install the drive gear to the shaft. See Figure 10-35.

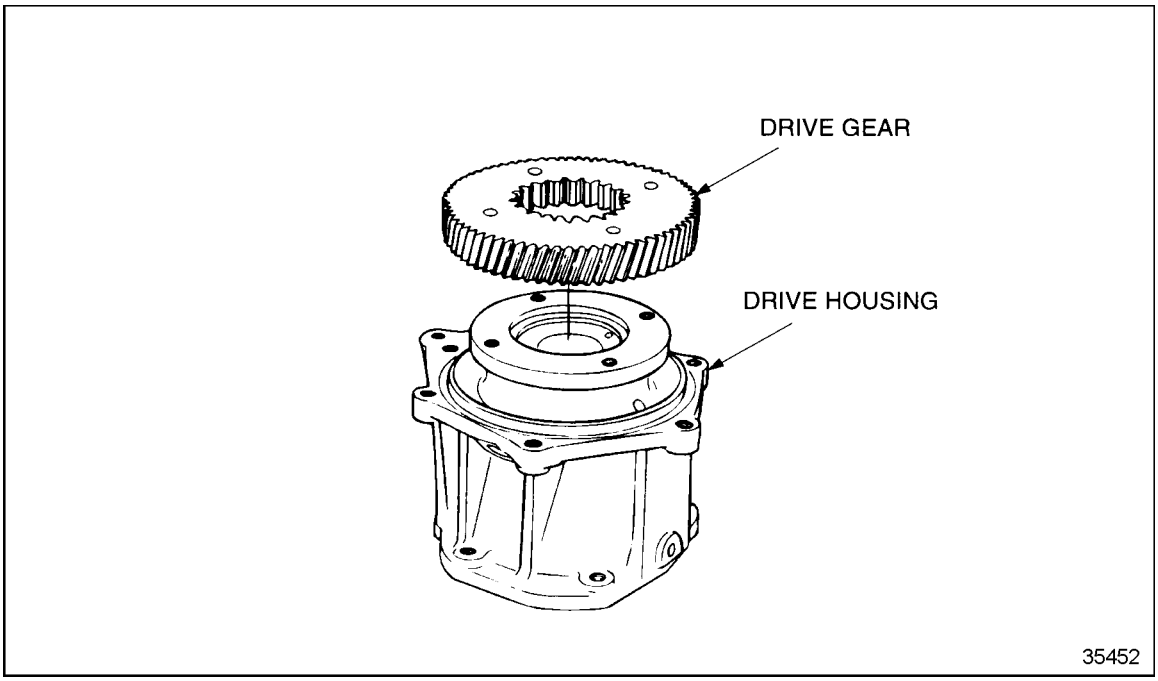

Figure 10-35 Air Compressor Drive Shaft Installation (Former Design)

20. Install the four drive gear-to-drive shaft bolts and torque to 58-73 N·m (43-54 lb·ft).

(Rev. 2004) *All information subject to change without notice.*
6SE483 0401 Copyright © 2004 DETROIT DIESEL CORPORATION

21. Secure the holding fixture, see Figure 10-12, in a suitable vise with the drive coupling positioned up. See Figure 10-36.

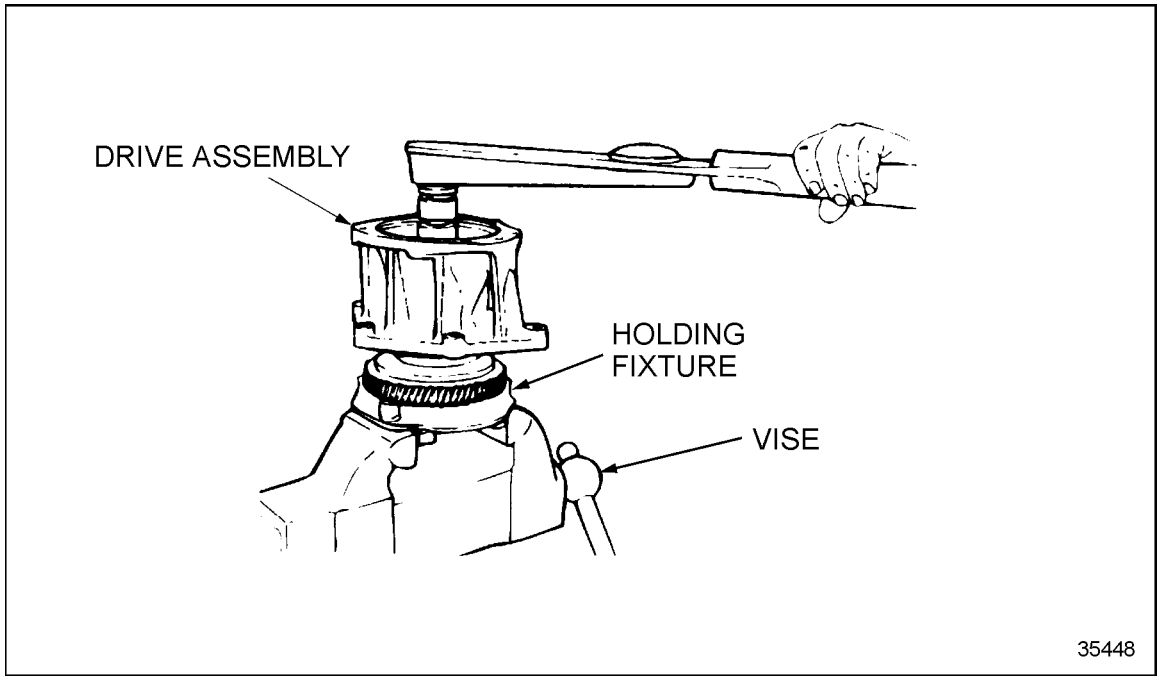

Figure 10-36 Air Compressor Drive Shaft Installation (Former Design)

22. Position the drive assembly on the holding fixture, engaging the internal teeth of the drive gear with the coupling on the fixture.
23. Lubricate the ball bearing with clean engine oil.
24. Place the spacer on the drive shaft (current design only), seating it against bearing inner race. Install the drive hub on the drive shaft. See Figure 10-37.

 Copyright © 2004 DETROIT DIESEL CORPORATION

25. Torque flanged nut to 298-346 N·m (220-255 lb·ft).

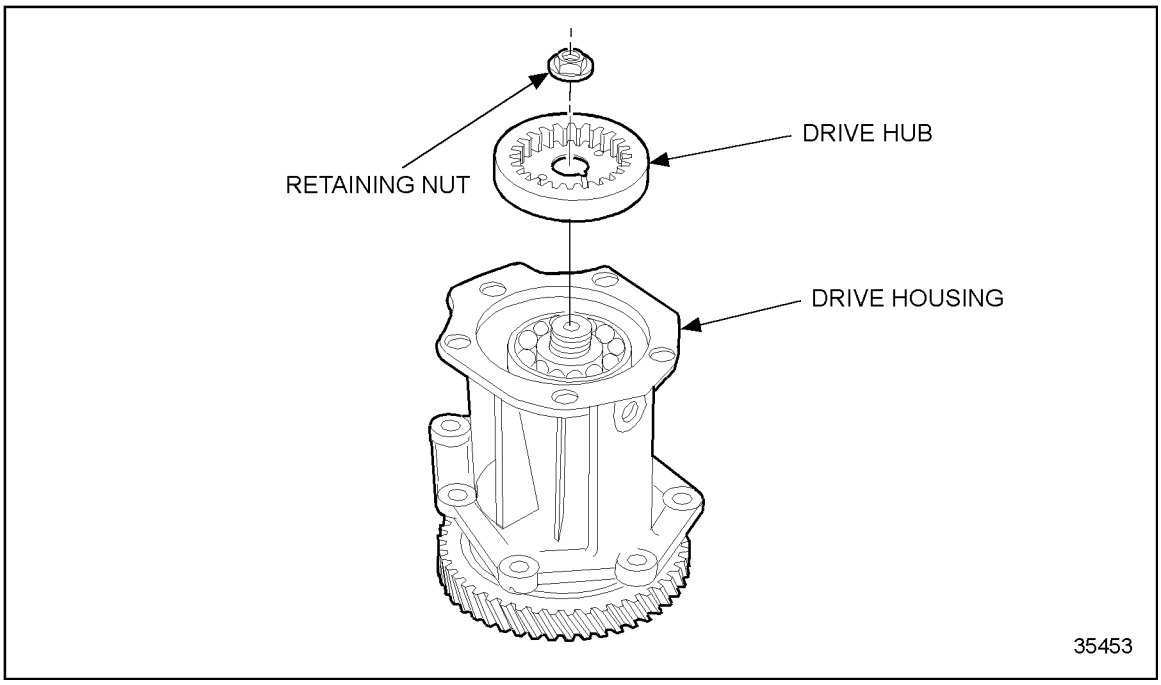

Figure 10-37 Air Compressor/Raw Water Pump Drive Hub Installation

26. Remove the drive assembly from the holding fixture and position it on a suitable flat surface with the drive gear facing up.

(Rev. 2004) *All information subject to change without notice.*
6SE483 0401 Copyright © 2004 DETROIT DIESEL CORPORATION

27. Assemble a dial indicator and magnetic base so that the indicator stem rests on the face of the drive gear just inboard of the drive gear teeth. See Figure 10-38.

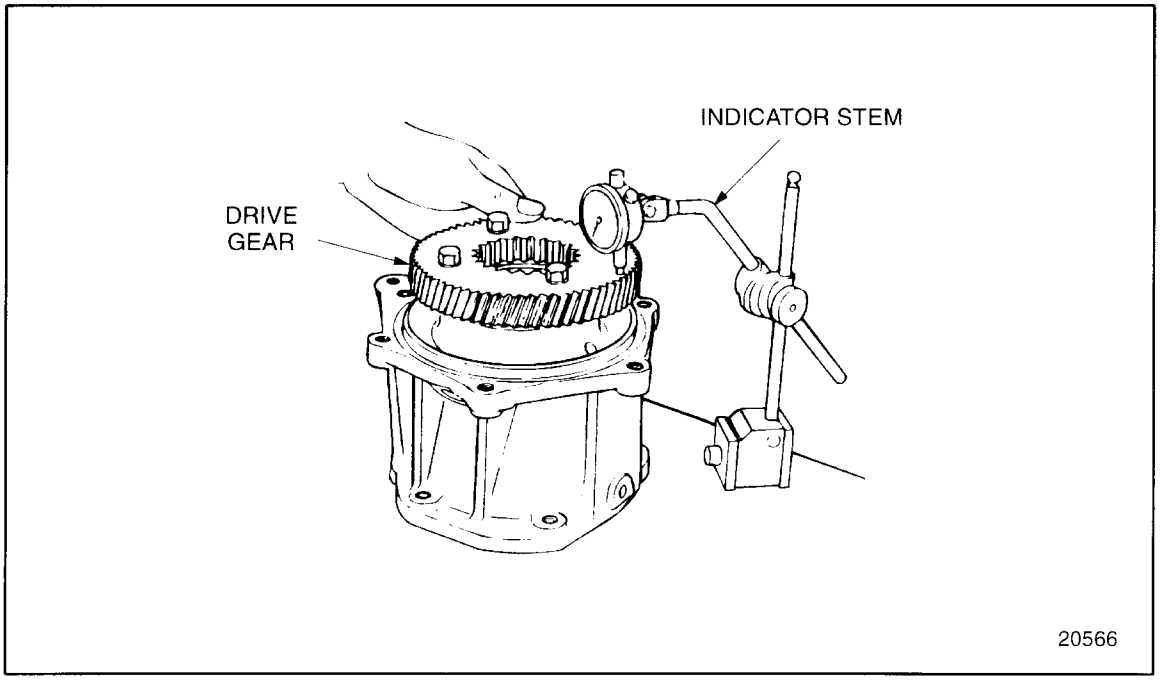

Figure 10-38 Air Compressor Drive Shaft Installation (Former Design)

28. Zero the dial indicator.
29. Rotate the drive gear two full revolutions. As the gear is rotated, the dial indicator may register both to the left and right of zero. The total amount the indicator needle moves to the left and right of zero, added together, gives the total indicated run-out (TIR).
30. If maximum TIR exceeds 0.08 mm (0.003 in.), it may be necessary to repeat the assembly procedure until the cause can be detected and eliminated.

 Copyright © 2004 DETROIT DIESEL CORPORATION

10.3.6 Installation of Air Compressor/Raw Water Pump Drive Assembly

Install the air compressor/raw water pump drive assembly as follows:

1. On engines manufactured through unit serial no. 06R175824, install two 1.5 mm x 10.0 mm (0.375 in. x 0.060 in.) flat washers under each of the six air compressor drive mounting bolts. Engines built after serial no. 06R175825 do not require the addition of washers to mounting bolts.
2. Install the drive assembly to its original position in the gear case, using a new gasket between the housing and gear case. Install the bolts (and washers, if required) that secure the drive assembly to the gear case.

NOTE:
The shorter bolt is installed in the two o'clock position.

3. Torque the five bolts and one nut to 58 - 73 N·m (43 - 54 lb·ft), using the required torque pattern. See Figure 10-39.

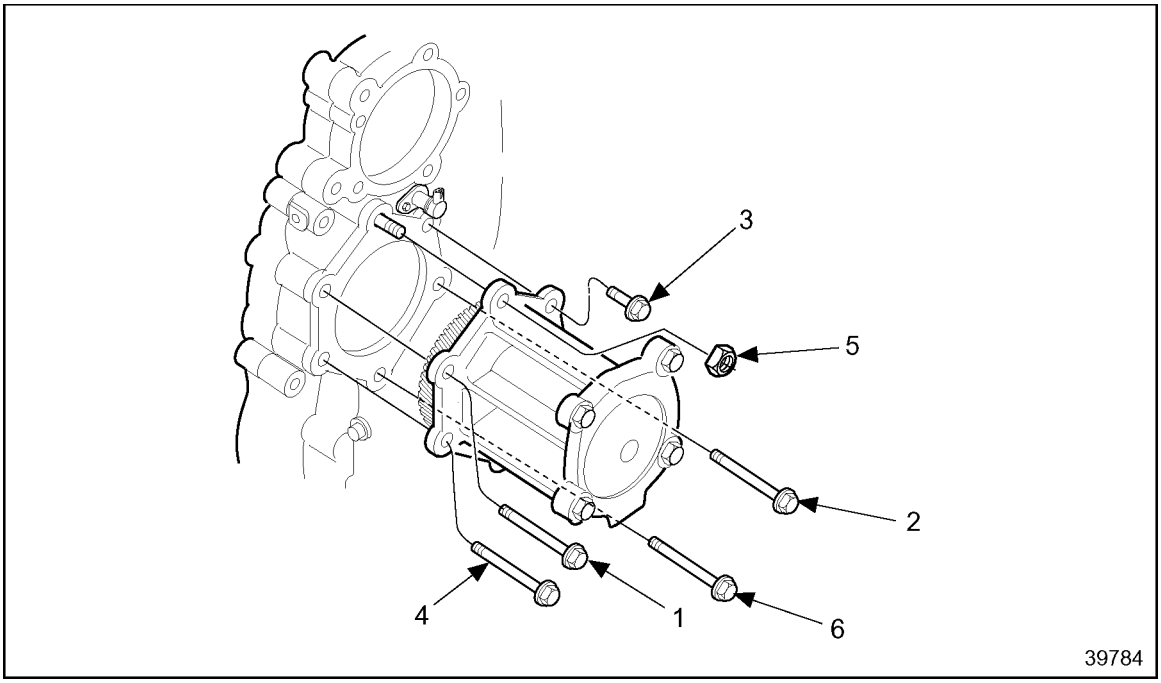

Figure 10-39 Bolt Torque Sequence

4. Measure the bull gear-to-drive gear lash. Refer to section 1.22.2.1
5. Install the access cover. Use a new gasket between the access cover and the gear case cover, and torque the five bolts to 30-38 N·m (22-28 lb·ft) in a star-shaped tightening pattern.
6. If the engine is equipped with a power steering pump, install the proper steering drive coupling and power steering pump and cover assembly to the gear case cover. Install a

(Rev. 2004) *All information subject to change without notice.*
6SE483 0401 Copyright © 2004 DETROIT DIESEL CORPORATION

new gasket between the cover and the gear case cover, and torque the 5 bolts to 30-38 N·m (22-28 lb·ft) in a star-shaped tightening pattern.

7. Connect the oil supply line at the Tee fitting, if applicable, at the top of the air compressor/raw water pump drive housing.
8. Install the air compressor. Refer to section 10.1.8.

NOTE:
For engines used in coach applications, a high strength air compressor supply hose *must* be installed between the intake manifold and the air compressor inlet. This hose can be identified by the light blue color on the inside of the hose. Flat band spring type hose clamps must be used.

CAUTION:

To avoid injury from flying parts when working with components under spring tension, wear adequate eye protection (face shield or safety goggles).

9. Install any other components that were removed for this procedure.

 Copyright © 2004 DETROIT DIESEL CORPORATION

10.4 KIM HOT START STARTING AID SYSTEM (MARINE)

A Kim Hot Start® starting aid system is installed in certain heat exchanger-cooled marine engines. This system consists of a 1000 watt heater element installed in a boss in the oil cooler housing where the coolant flows into the cylinder block. A thermostat located in the thermostat housing spacer is used to turn the heater element on and off. The heater element and thermostat are wired to a harness connected to a bracket-mounted control box on the right-rear of the cylinder block. The Kim Hot Start system provides a coolant temperature of between 38 — 49°C (100 – 120°F) for rapid engine start-up.

NOTICE:
Always disconnect the electrical harness to the block heater system before draining the engine coolant. Failure to observe this precaution may result in damage to the block heater system should the thermostat energize the element after coolant is drained from the engine.

The Kim Hot Start heater element and thermostat do not require periodic maintenance. As long as they are operating properly, no further maintenance is needed.

The wiring harness should be inspected periodically for loose or damaged connections and frayed insulation. Tighten connections or repair or replace the harness, as required.

Kim Hot Start® is a registered trademark of the Kim Corporation.

(Rev. 2004) *All information subject to change without notice.*
6SE483 0401 Copyright © 2004 DETROIT DIESEL CORPORATION

10.A ADDITIONAL INFORMATION

Description **Page**

INSTALLATION GUIDELINES FOR ALLIED SIGNAL®-BENDIX® AIR COMPRESSOR TF-550 AND TF-750 10-52
Compressor Discharge Line 10-52
Discharge Line Material 10-52
Discharge Line Slope 10-52
Carbon Restricted Discharge Line 10-53
Discharge Line Accessories 10-53
Compressor Inlet 10-53
Inlet Connection Recommendations 10-53
Alcohol Evaporator 10-53
Unloader Pressure 10-54
Governor 10-54
Compressor Orientation 10-54
Power Angle 10-54

 Copyright © 2004 DETROIT DIESEL CORPORATION

INSTALLATION GUIDELINES FOR ALLIED SIGNAL®-BENDIX® AIR COMPRESSOR TF-550 AND TF-750

Installation guidelines for Allied Signal®-Bendix® air compressor are as follows:

Compressor Discharge Line

Avoid installing valves (pressure regulator valves, etc.) in the compressor discharge line between the compressor, and reservoir or air dryer. The valves can trap water and lead to discharge line freeze-up during cold temperature conditions. The longer the discharge line length, the greater the potential for a frozen discharge line to occur. Compressor discharge line lengths are listed in Table 10-1.

LENGTH	I.D. MIN.
6.0-9.5 ft.	9.5-12 ft.*
9.5-12 ft.*	1/2in†
12-16 ft.*	5/8in.

* Last three feet including reservoir or air dryer supply port fitting must be insulated with 1/2 in. thick closed cell polyethylene pipe insulation.

† Use of larger I.D. discharge line will further reduce the chances of freeze-up in extreme cold weather conditions and should be considered for "cold weather package" applications.

Table 10-1 Discharge Line Length and Diameter (Low Duty Cycle Applications)

NOTE:
High duty cycle application with lengths of 10 to 16 feet should use a 1/2 in. I.D. discharge line.

NOTE:
If the actual application requires the discharge line length to fall outside the specified ranges given, it is recommended that Allied Signal® TBS Engineering department be contacted.

Discharge Line Material

If a copper discharge line is used, a flexible connection to the first reservoir or air dryer should be added to prevent fatigue of the copper line. Wire-braided Teflon® hose must have a minimum operating temperature of 232°C (450°F) and a working pressure of 150 psig (10.0 bar) if connected directly to the compressor discharge fitting.

Discharge Line Slope

The discharge line should slope continuously downward from the air compressor discharge port, with no sharp bends, water traps, risers or elbow fittings, to the first reservoir or air drying device. If there are any upward or downward deviations, the line can trap water, which can freeze during cold weather, causing a blockage. Compressor damage can occur as a result of a blocked discharge line.

(Rev. 2004) *All information subject to change without notice.*
6SE483 0401 Copyright © 2004 DETROIT DIESEL CORPORATION

Carbon Restricted Discharge Line

If the discharge line becomes restricted with carbon, the compressor must work harder to deliver compressed air, thus reducing compressor durability. Make sure the discharge line does not have a carbon restriction.

Discharge Line Accessories

The application of a downstream device such as an air dryer, discharge line unloader, or turbocharger cut-off valve, needs to be installed properly to avoid premature compressor durability problems. Refer to the manufacturer's instructions for these products.

NOTE:
Alcohol injectors which restrict the flow of air in the discharge line should be avoided. Restrictions in the discharge line increase the time required to build up system pressure.

Compressor Inlet

The following summarizes the three compressor inlet connections and the associated pitfalls:

- ☐ Turbocharger: Must be consistent with pressure and speed limits determined by the manufacturer.
- ☐ Inlet side of the turbocharger: Engine air cleaner must be serviced at regular intervals. (See manufacturer's instructions)
- ☐ Local air filter: Local air filter must be serviced at regular intervals. (See manufacturer's instructions)

Inlet Connection Recommendations

Inlet connection recommendations are as follows:

- ☐ Line size: The preferred inlet size is 19 mm (3/4 in.) I.D. The minimum line size for the inlet connection is 15.9 mm (5/8 in.) I.D., for either naturally aspirated or turbocharger applications.
- ☐ Depression of inlet pressure: A compressor inlet connected to the engine induction system must not depress the intake pressure to more than 635 mm (25 in.) of water.
- ☐ Separate inlet filters: Separate inlet filters must not depress the intake pressure to more than 635 mm (25 in.) of water. The polyurethane sponge strainer should be serviced every 8050 km (5000 miles) or 150 operating hours. The paper element type should be replaced every 32,190 km (20,000 miles) or 800 operating hours.

Alcohol Evaporator

The alcohol evaporator can be used to reduce the potential for an air system freeze-up; however, it does not remove any moisture from the air system, but only lowers its freezing point. The preferred method of protecting the air system against cold weather freeze-up is with an air dryer. The moisture generated by the compression of air is removed, thus minimizing the possibility of contaminating the air system.

 Copyright © 2004 DETROIT DIESEL CORPORATION

Unloader Pressure

In a turbocharged application a minimum pressure of 85 psi (5.9 bar) is required to insure proper unloader operation. The cut in pressure of the governor used must be at least 95 psi (6.6 bar).

Governor

Governor guidelines are as follows:

- ☐ Governor/Reservoir line routing: The governor/reservoir line should slope downward toward the first reservoir to eliminate a potential water trap or ice restriction. The governor may operate erratically if the governor/reservoir line becomes restricted. Compressor unloader or inlet valve damage may result. The governor/reservoir line should be plumbed into the top of the reservoir. The governor/reservoir line should never be plumbed into the bottom of the reservoir, because water and contamination may cause the governor to malfunction.
- ☐ Governor/reservoir line size: The governor/reservoir line size is 6.4 mm (1/4 in.) I.D. tubing; however, 4.8 mm (3/16 in.) I.D. is acceptable.
- ☐ Governor mounting: The governor mounting is on the compressor unloader pad. The governor may be remote mounted; however, the line from the governor to the unloader pad should be as short as possible (not to exceed 1.2 mm [4 ft.]). The governor should be mounted with the exhaust port toward the road surface, to reduce the possibility of moisture contamination.
- ☐ Waterproof governor: In situations where the exhaust port of the governor must be pointed upward, a special waterproof governor should be used.
- ☐ High temperature governor: A high temperature governor should be used when the under-hood ambient temperature exceeds 93°C (200°F).

Compressor Orientation

The maximum side-to-side roll is degrees beyond the nominally designated orientation. Some models are designed with an orientation other than zero degrees.

Power Angle

The maximum fore-aft tilt (power angle) the compressor may be subjected to is eight degreesfor the TF550 and six degrees for the TF750. These values may be increased by five degrees if the compressor is turbocharged or if the flange-mounted compressor is bottom drained.

Allied Signal® and Bendix® are registered trademarks of Allied Signal.

(Rev. 2004) *All information subject to change without notice.*
6SE483 0401 Copyright © 2004 DETROIT DIESEL CORPORATION

11 OPERATION AND VERIFICATION

Section **Page**

11.1 PREPARATION FOR A FIRST TIME START 11-3
11.2 STARTING 11-7
11.3 RUNNING 11-8
11.4 STOPPING 11-11
11.5 OPERATING CONDITIONS 11-12
11.6 SERIES 60G GENSET ENGINE OPERATING CONDITIONS 11-16
11.7 SERIES 60G AUTOMOTIVE ENGINE OPERATING CONDITIONS 11-18
11.8 ENGINE RUN-IN INSTRUCTIONS 11-20

 Copyright © 2004 DETROIT DIESEL CORPORATION

11.1 PREPARATION FOR A FIRST TIME START

Before starting an engine for the first time, carefully read and follow the instructions in this section:

NOTICE:
Attempting to run the engine before studying these instructions may result in serious damage to the engine.

NOTICE:
When preparing to start a new or overhauled engine or an engine that has been in storage, perform all of the operations listed below. Before a routine start (at each shift), see Daily Operations in the Lubrication and Preventive Maintenance Chart. Refer to section 13.1. Failure to perform required prestart operations may result in engine damage.

11.1.1 Cooling System

Install all the drain cocks and plugs in the cooling system as instructed below:

1. Open the cooling system vents.
2. Remove the filler cap and fill the cooling system with the coolant specified.
   Refer to section 5.4. The coolant level should be within 2 in. (50 mm) of the filler neck to allow for fluid expansion.
3. Close the vents, if used, after filling the cooling system.

NOTICE:
Failure to prime the raw water pump may result in damage to the pump impeller.

4. On marine engines, prime the raw water cooling system and open any sea cocks in the raw water pump intake line. Prime the raw water pump by removing the pipe plug or electrode provided in the pump outlet elbow and pour water into the pump.

 Copyright © 2004 DETROIT DIESEL CORPORATION

11.1.2 Lubrication System

The lubricating oil film on the rotating parts and bearings of a new or overhauled engine, or one which has been in storage, may be insufficient for proper lubrication when the engine is started for the first time.

It is recommended that the engine lubricating system be charged with a pressure prelubricator, set to supply a minimum of 172 kPa (25 lb/in.^{2}) oil pressure, to ensure an immediate flow of oil to all bearings at the initial engine start-up. The oil supply line should be attached to the engine so that oil under pressure is supplied to the main oil gallery.

With the oil pan dry, use the prelubricator to prime the engine with sufficient oil to reach all bearing surfaces. Use lubricating oil as specified. Refer to section 5.2.1. Then, remove the dipstick, wipe it with a clean cloth, insert and remove it again to check the oil level in the oil pan. Add sufficient oil, if necessary, to bring it to the *full* mark on the dipstick. Do not overfill.

If a pressure prelubricator is not available, fill the crankcase to the proper level with lubricating oil. Refer to section 13.13.1. Then, prelubricate the upper engine parts by removing the valve rocker cover and pouring lubricating oil, of the same grade and viscosity as used in the crankcase, over the rocker arms, rocker arm shafts, camshaft lobes and camshaft follower rollers.

(Rev. 2004) *All information subject to change without notice.*
6SE483 0401 Copyright © 2004 DETROIT DIESEL CORPORATION

11.1.3 Turbocharger

When a turbocharger is replaced, or if the engine has been in storage, the turbocharger must be prelubricated by pouring oil into the oil supply inlet before the engine is started. Rotate the shaft to coat the bearings with oil.

NOTICE:

The free floating bearings in the turbocharger center housing require positive lubrication. This is provided by the above procedure before the turbocharger reaches its maximum operating speed which is produced by high engine speeds. Starting any turbocharged engine and accelerating to any speed above idle before engine oil supply and pressure have reached the free floating bearings can cause severe damage to the shaft and bearings of the turbocharger.

CAUTION:

Diesel engine exhaust and some of its constituents are known to the State of California to cause cancer, birth defects, and other reproductive harm.

- ☐ **Always start and operate an engine in a well ventilated area.**
- ☐ **If operating an engine in an enclosed area, vent the exhaust to the outside.**
- ☐ **Do not modify or tamper with the exhaust system or emission control system.**

Start and run the engine at idle until oil supply pressure has reached all of the turbocharger moving parts. A good indicator that all the moving parts are getting lubrication is when the oil pressure gage registers 138 kPa (20 lb/in.^{2}) pressure at idle speed.

 Copyright © 2004 DETROIT DIESEL CORPORATION

11.1.4 Air Cleaner

Refer to OEM instructions for the air cleaner, and service accordingly.

11.1.5 Transmission

Check the oil level and, if necessary, fill the transmission, marine gear, or torque converter to the proper level with the lubricant specified by the manufacturer.

11.1.6 Diesel Fuel System

Fill the fuel tank with the fuel specified. Refer to section 5.1.

If the unit is equipped with a fuel valve, it must be opened. To ensure prompt starting, the fuel system between the pump and fuel return line must be full of fuel.

If the engine has been out of service for a considerable length of time, prime the fuel system between the fuel pump and the fuel return manifold. Before priming the fuel system, remove and fill both fuel filters with clean fuel oil and reinstall them. Refer to section11.1.3 for the exhaust caution before preceeding.

NOTE:
The engine fuel system is filled with fuel before leaving the factory. If the fuel is still in the system when preparing to start the engine, priming should be unnecessary.

11.1.7 Drive Belts

Adjust all drive belts as recommended. Refer to section 13.13.10.

11.1.8 Storage Battery

Check the battery. The top should be clean and dry, the terminals tight and protected with a coat of silicone spray or petroleum jelly and the electrolyte must be at the proper level.

A hydrometer reading (corrected for the temperature of the electrolyte) should be 1.265 or higher. If necessary, charge the battery.

11.1.9 Clutch

Disengage the clutch, if the unit is so equipped.

(Rev. 2004) *All information subject to change without notice.*
6SE483 0401 Copyright © 2004 DETROIT DIESEL CORPORATION

11.2 STARTING

Before starting the engine for the first time, perform the operations listed under "Preparation For Starting Engine First Time." Refer to section 11.1.

Before a routine start, see "Daily Maintenance - All Applications." Refer to section 13.2.

Start an engine equipped with an electric starting motor as follows:

1. Turn the ignition switch to the ON position. The yellow check engine and red stop engine lights should both light up. After 6-10 seconds both lights should go out. If both lights fail to go out, refer to section 2.17for instructions on monitoring the DDEC system.

NOTICE:
To prevent serious damage to the cranking motor, if the engine does not start, do not press the starting switch again while the cranking motor is spinning.

2. If the check engine and stop engine lights both go out, press the starting motor switch firmly. If the engine fails to start within 15 seconds, release the starting switch and allow the starting motor to cool for 15 seconds before trying again. If the engine fails to start after four attempts, an inspection should be made to determine the cause.

 Copyright © 2004 DETROIT DIESEL CORPORATION

11.3 RUNNING

The following sections cover normal operations.

11.3.1 Oil Pressure

Observe the oil pressure gage immediately after starting the engine. If there is no pressure indicated within 10 to 15 seconds, or the stop engine light (red) comes on, stop the engine and check the lubricating oil system.

11.3.2 Warm-up

Make sure area is well-ventilated before starting the engine.

⚠ CAUTION:

Diesel engine exhaust and some of its constituents are known to the State of California to cause cancer, birth defects, and other reproductive harm.

- ☐ **Always start and operate an engine in a well ventilated area.**
- ☐ **If operating an engine in an enclosed area, vent the exhaust to the outside.**
- ☐ **Do not modify or tamper with the exhaust system or emission control system.**

Run the engine at idle with no-load for approximately five minutes, allowing it to warm-up before applying a load. The engine will idle at a higher speed if the oil is cold when started.

As the engine reaches operating temperature, the electronic control system of the engine will lower the idle speed if not equipped with an automatic transmission.

If the unit is operating in a closed room, start the room ventilating fan or open the windows and doors, as weather conditions permit, so ample air is available for the engine.

11.3.2.1 Inspection

While the engine is running at operating temperature, check for coolant, fuel or lubricating oil leaks. Tighten the line connections where necessary to stop leaks.

While the engine is idling, check the transmission or marine gear for proper level and add oil as required. On marine engines check that water is flowing out the exhaust pipe or raw water discharge pipe. Look for coolant, fuel, or lubricating oil leaks at this time. If any are found, shut down the engine immediately and have leaks repaired after the engine has cooled.

(Rev. 2004) *All information subject to change without notice.*
6SE483 0401 Copyright © 2004 DETROIT DIESEL CORPORATION

11.3.3 Engine Temperature

Refer to section 11.5 for normal operating temperature.

11.3.4 Crankcase

If the engine crankcase was refilled, stop the engine after normal operating temperature has been reached, allow the oil to drain (approximately 20 minutes) back into the crankcase and check the oil level. Add oil, if necessary, to bring it to the proper level on the dipstick.

Use only the lubricating oil specified. Refer to section 5.2.1.

11.3.5 Cooling System

Several types of cooling systems are used by vehicle, vessel, off-road machinery, and generator set manufacturers. Refer to OEM guidelines.

CAUTION:

To avoid injury from the expulsion of hot coolant, never remove the cooling system pressure cap while the engine is at operating temperature. Remove the cap slowly to relieve pressure. Wear adequate protective clothing (face shield or safety goggles, rubber gloves, apron, and boots).

Remove the radiator or heat exchanger pressure cap slowly and check the engine coolant level. The coolant level should be within two inches of the top of the opening. If necessary, add properly inhibited coolant.

Entrapped air must be purged after the cooling system is filled. To do this allow the engine to warm up without the pressure cap installed. With the transmission or marine gear in neutral, increase engine rpm above 1000 rpm and add coolant as required. On marine engines, vent the drain cock on the water return line at the water-jacket turbocharger (if used) until coolant (no air) comes out. Install the pressure cap after the coolant level has stabilized at the bottom of the radiator or heat exchanger and check to make sure the coolant level is at the bottom of the filler neck. Add coolant as required, replace the pressure cap, and fill the recovery bottle to the "Full Cold" level, or no more than one-quarter of its volume.

 Copyright © 2004 DETROIT DIESEL CORPORATION

11.3.6 Turbocharger

Make a visual inspection of the turbocharger for oil leaks, coolant leaks, marine engine exhaust leaks, excessive noise and vibration.

CAUTION:

To avoid injury from contact with rotating parts when an engine is operating with the air inlet piping removed, install an air inlet screen shield over the turbocharger air inlet. The shield prevents contact with rotating parts.

Stop the engine immediately if a leak or unusual noise or vibration is noted. Do not restart the engine until the cause of the concern has been investigated and corrected. Authorized Detroit Diesel service outlets are properly equipped to perform this service.

11.3.7 Avoid Unnecessary Engine Idling

During long engine idling periods, the engine coolant temperature will fall below the normal operating range. The incomplete combustion of fuel in a cold engine will cause crankcase dilution, formation of lacquer or gummy deposits on the valves, pistons and rings and rapid accumulation of sludge in the engine.

NOTE:
When prolonged engine idling is necessary, maintain at least 850 r/min spring/summer and 1200 rpm fall/winter.

(Rev. 2004) *All information subject to change without notice.*
6SE483 0401 Copyright © 2004 DETROIT DIESEL CORPORATION

11.4 STOPPING

The following should be performed for NORMAL stopping:

1. Release the load and decrease the "engine speed" in the NEUTRAL position.

NOTICE:
Stopping a turbocharged engine immediately after high speed operation may cause damage to the turbocharger, as it will continue to turn without an oil supply to the bearings.

2. Allow the engine to run at idle with no-load for four or five minutes. This allows the turbocharger to cool and slow down. Then turn the key switch to the OFF position.

11.4.1 Emergency Stopping

To stop the engine, turn the key to the OFF position. On certain marine engines, the emergency shutdown system may be activated to stop the engine.

NOTICE:
Never use the emergency shutdown system, except in an emergency. Use of the emergency shutdown can cause turbocharger damage.

NOTICE:
If the emergency air shutdown is used to stop the engine in an emergency situation, always have the shutdown checked for damage and for proper operation before the vessel is returned to service. This is especially important if shutdown is made at high engine rpm. To ensure positive valve closure should another emergency shutdown be required, the shutdown must be checked and required repairs or adjustments made at this time. Failure to observe this precaution may permit engine run-on when the emergency shutdown is activated.

The emergency shutdown should be used only when the engine does not respond to the normal stop engine procedure.

To shut down the engine, simply activate the emergency shutdown control. This is an electrical switch which is normally identified as such on the control panel.

The air shutdown must be reset by hand. If an "emergency stop" knob connected to a bowden wire is also installed on the shutdown, this should be pushed in before the engine is ready to start again.

 Copyright © 2004 DETROIT DIESEL CORPORATION

11.5 OPERATING CONDITIONS

The operating limits for the Series 60 diesel engine are listed in Table 11-1, listed in Table 11-2 and listed in Table 11-3. Any variations from the conditions as listed may indicate an abnormal situation in need of correction. Be sure that the readings represent true values and the instruments are accurate before attempting to make corrections to the engine. This data represents rated conditions. Actual data may be influenced by environmental conditions.

Parameter Limits	Operating Limits at 2100 r/min	Operating Limits at 1800 r/min
Lubrication System Rated	345 (50)	345 (50)
Lubricating oil pressure (at idle speed) - kPa (lb/in.^{2})	290 (42)	255 (37)
In gallery oil temperature, maximum - °C (°F)	110 (230)	110 (230)
In pan oil temperature - °C (°F)	113 (235)	113 (235)
In pan oil temperature - 11.1 liter with thermatic oil control valve - °C (°F)	114 (237)	114 (237)
Oil flow - liters/minute (gallons/minute)	136 (36)	136 (36)
Oil pan capacity:		
High - liters (quarts)	30 (32)	30 (32)
Low - liters (quarts)	25 (26)	25 (26)
Total engine oil capacity (with 2 filters) - liters (quarts)	36 (38)	36 (38)
Total engine oil capacity (with 3 filters) - liters (quarts)	39 (41)	39 (41)

Table 11-1 Series 60 Engine Lubrication System Parameters

(Rev. 2004) *All information subject to change without notice.*
6SE483 0401 Copyright © 2004 DETROIT DIESEL CORPORATION

Air, Fuel, and Cooling System Parameter Limits	Operating Limits at 2100 r/min	Operating Limits at 1800 r/min
Air System		
Air Inlet restriction full load, maximum - kPa (in. H_2O):		
Dirty air cleaner	5.0 (20)	5.0 (20)
Clean air cleaner	3.0 (12)	3.0 (12)
Crankcase pressure full load, maximum - kPa (in. H_2O)	0.75 (3)	0.75 (3)
Exhaust back pressure, maximum kPa (in. Hg):		
Full load	10.1 (3.0)	10.1 (3.0)
Maximum allowable temperature rise (ambient air to engine inlet) - °C (°F)	16.7 (30)	16.7 (30)
Maximum allowable charge air cooler pressure drop - kPa (in. Hg)	10.1 (3.0)	10.1 (3.0)
Fuel System		
Fuel pressure at secondary filter outlet - kPa (lb/in.^{2})		
Normal with.03 mm (0.080 in.) restriction	577 (75)	577 (75)
Minimum	345 (50)	345 (50)
Fuel spill minimum at no-load - L/min (gal/min):		
Normal with 2.03 mm (0.080 in.) restriction	4.9 (1.3)	4.1 (1.0)
Fuel pump suction at pump inlet, maximum - kPa (in. Hg):		
Clean system	20 (6)	20 (6)
Dirty system	41 (12)	41 (12)
Cooling System		
Coolant temperature normal - °C (°F)	88 (190)	88 (190)
Coolant inlet restriction, maximum - kPa (in. Hg)	0.0 (0.0)	0.0 (0.0)
Coolant flow at full load speed-L/min (gal/min)	341 (90)	276 (73)
Engine coolant capacity - liters (quarts)	23 (24)	23 (24)
Minimum pressure cap - kPa (lb/in.^{2}):	69 (10)	69 (10)
Maximum top tank temperature - °C (°F)	99 (210)	99 (210)
Minimum top tank temperature - °C (°F)	71 (160)	71 (160)
Thermostats:		
Start to open - °C (°F)	88 (190)	88 (190)
Fully open - °C (°F)	96 (205)	96 (205)

Table 11-2 Series 60 Engine Air System, Fuel System, and Cooling System Parameters

 Copyright © 2004 DETROIT DIESEL CORPORATION

Air, Fuel, and Cooling System Parameter Limits	Operating Limits at 2300 r/min
Air System	
Air Inlet restriction full load, maximum - kPa (in. H_2 O):	
Dirty air cleaner	5.0 (20)
Clean air cleaner	2.5 (10)
Crankcase pressure full load, maximum - kPa (in. H_2 O)	0.75 (3)
Exhaust back pressure, maximum kPa (in. Hg):	
Full load	7.4 (2.2)
Maximum allowable temperature rise (ambient air to engine inlet) - °C (°F)	13.9 (25)
Maximum allowable charge air cooler pressure drop - kPa (in. Hg)	10 (2.5)
Fuel System	
Fuel pressure at secondary filter outlet - kPa (lb/in.^{2})	577 (75)
Normal with.03 mm (0.080 in.) restriction	345 (50)
Minimum	
Fuel spill minimum at no-load - L/min (gal/min):	
Normal with 2.03 mm (0.080 in.) restriction	
Fuel pump suction at pump inlet, maximum - kPa (in. Hg):	
Clean system	20 (6)
Dirty system	41 (12)
Fuel Inlet Temperature, Maximum °F (°C)	140 (60)
Cooling System	
Coolant temperature normal - °C (°F)	71 (160)
Coolant inlet restriction, maximum - kPa (in. Hg)	0.0 (0.0)
Raw Water Inlet Restriction, Maximum, L/min (galmin)	10 (3.0)
Coolant flow at full load speed-L/min (gal/min)	632 (167)
Raw Water Flow - L/min (gal/min)	443 (117)
Charge Air Cooler Water Flow - L/min (gal/min)	443 (117)
Engine coolant capacity - liters (quarts)	56 (60)
Minimum pressure cap - kPa (lb/in.^{2}):	5.2 (7.5)
Maximum top tank temperature - °C (°F)	99 (210)
Minimum top tank temperature - °C (°F)	71 (160)
Thermostats:	
Start to open - °C (°F)	71 (160)
Fully open - °C (°F)	82 (180)
Exhaust System	

(Rev. 2004) *All information subject to change without notice.*
6SE483 0401 Copyright © 2004 DETROIT DIESEL CORPORATION

Air, Fuel, and Cooling System Parameter Limits	Operating Limits at 2300 r/min
Exhaust Temperature - °C (°F)	645 (341)
Maximum Back Pressure - in. Hg (kPa)	2.2 (7.4)

Table 11-3 Heat Exchanger-Cooled Pleasure Craft Marine Air System, Fuel System, and Cooling System Parameters

 Copyright © 2004 DETROIT DIESEL CORPORATION

11.6 SERIES 60G GENSET ENGINE OPERATING CONDITIONS

Listed in Table 11-4are the engine operating conditions specifications.

SYSTEM	SPEC
Fuel System	
Maximum Fuel Inlet Temperature - °F (°C)	140 (60)
Minimum Fuel Inlet Temperature - °F (°C)	32 (0)
Maximum Fuel Inlet Pressure to Regulator @ Idle - in. H_2O (kPa)	20 (5)
Minimum Fuel Inlet Pressure to Regulator @ full load - in. H_2O (kPa)	5 (1)
Fuel Filter, Primary	-
Fuel Filter, Secondary	-
Lubrication System	
Oil Pressure at Rated Speed - lb/in^2 (kPa)	50 (345)
Oil Pressure at Low Idle - lb/in^2 (kPa)	12 (83)
In Pan Oil Temperature - °F (°C)	235 (113)
Oil Pan Capacity, High Limit - qt (L)	32 (30)
Oil Pan Capacity, Low Limit - qt (L)	26 (25)
Total Engine Oil Capacity with Filters - qt (L)	38 (36)
Oil Filter, Two Full Flow - microns	28
Cooling System	
Thermostat:	
Start to Open - °F (°C)	186 (86)
Fully Open - °F (°C)	207 (97)
Maximum Water Pump Inlet Restriction - in. Hg (kPa)	0 (0)
Engine Coolant Capacity - qt (L)	24 (23)
Minimum Pressure Cap - lb/in^2 (kPa)	7 (48)
Maximum Coolant Pressure (Exclusive of Pressure Cap) - lb/in^2 (kPa)	10 (69)
Maximum Top Tank Temperature - °F (°C)	210 (99)
Minimum Top Tank Temperature - °F (°C)	160 (71)
Air System	
Maximum Ambient to Turbo Compressor Inlet Temperature Rise - °F (°C)	30 (16.7)
Maximum Air Intake Restriction:	
Dirty Air Cleaner - in. H_2O (kPa)	20 (5)
Clean Air Cleaner - in. H_2O (kPa)	12 (3)
Engine Manifold Pressure - in. Hg (kPa)	43 (146)
Maximum Charge Air Cooler System Total Pressure Drop - in. H_2O (kPa)	41 (10.2)
Maximum Ambient to Intake Manifold Temp. - °F (°C)	30.0 (16.7)

(Rev. 2004) *All information subject to change without notice.*
6SE483 0401 Copyright © 2004 DETROIT DIESEL CORPORATION

SYSTEM	SPEC
Maximum Crankcase Pressure - in. H_2O (kPa)	2 (0.5)
Exhaust System	
Exhaust Flow:	
Rated Speed - ft^3 /min (m^3/min)	2325 (65.8)
Peak Torque Speed - ft^3 /min (m^3/min)	-
Exhaust Temperature:	
Rated Speed - °F (°C)	1020 (549)
Peak Torque Speed - °F (°C)	-
Maximum Back Pressure - in. Hg (kPa)	3.0 (10.1)

Table 11-4 Engine Operating Conditions for the Series 60G Genset Engine

 Copyright © 2004 DETROIT DIESEL CORPORATION

11.7 SERIES 60G AUTOMOTIVE ENGINE OPERATING CONDITIONS

Listed in Table 11-5 are the engine operating conditions specifications.

SYSTEM	SPEC
Fuel System	
Maximum Fuel Inlet Temperature - °F (°C)	158 (70)
Minimum Fuel Inlet Temperature - °F (°C)	-40 (-40)
Maximum Fuel Inlet Pressure to Regulator @ Idle - lb·in. $_2$ (kPa)	210 (1448)
Minimum Fuel Inlet Pressure to Regulator @ full load - lb·in. $_2$ (kPa)	70 (482)
Fuel Filter, Primary	Coalescing 1 micron
Fuel Filter, Secondary	Coalescing 1 micron
Lubrication System	
Oil Pressure at Rated Speed - lb/in^2 (kPa)	50 (345)
Oil Pressure at Low Idle - lb/in^2 (kPa)	12 (83)
In Pan Oil Temperature - °F (°C)	235 (113)
Oil Pan Capacity, High Limit - qt (L)	32 (30)
Oil Pan Capacity, Low Limit - qt (L)	26 (25)
Total Engine Oil Capacity with Filters - qt (L)	38 (36)
Oil Filter, Two Full Flow - microns	28
Cooling System	
Thermostat:	
Start to Open - °F (°C)	186 (86)
Fully Open - °F (°C)	207 (97)
Maximum Water Pump Inlet Restriction - in. Hg (kPa)	0 (0)
Engine Coolant Capacity - qt (L)	24 (23)
Minimum Pressure Cap - lb/in^2 (kPa)	7 (48)
Maximum Coolant Pressure (Exclusive of Pressure Cap) - lb/in^2 (kPa)	10 (69)
Maximum Top Tank Temperature - °F (°C)	210 (99)
Minimum Top Tank Temperature - °F (°C)	160 (71)
Air System	
Maximum Ambient to Turbo Compressor Inlet Temperature Rise - °F (°C)	30 (16.7)
Maximum Air Intake Restriction:	
Dirty Air Cleaner - in. H_2O (kPa)	20 (5)
Clean Air Cleaner - in. H_2O (kPa)	12 (3)
Engine Manifold Pressure - in. Hg (kPa)	43 (146)
Maximum Charge Air Cooler System Total Pressure Drop - in. H_2O (kPa)	41 (10.2)
Maximum Ambient to Intake Manifold Temp. - °F (°C)	30.0 (16.7)

(Rev. 2004) *All information subject to change without notice.*
6SE483 0401 Copyright © 2004 DETROIT DIESEL CORPORATION

SYSTEM	SPEC
Maximum Crankcase Pressure - in. H_2O (kPa)	2 (0.5)
Exhaust System	
Exhaust Flow:	
Rated Speed - ft^3 /min (m^3/min)	1961 (55)
Peak Torque Speed - ft^3 /min (m^3/min)	1250 (35)
Exhaust Temperature:	
Rated Speed - °F (°C)	1110 (600)
Peak Torque Speed - °F (°C)	1065 (575)
Maximum Back Pressure - in. Hg (kPa)	2.4 (8.1)

Table 11-5 Engine Operating Conditions for the Series 60G Automotive Engine

 Copyright © 2004 DETROIT DIESEL CORPORATION

11.8 ENGINE RUN-IN INSTRUCTIONS

Following a complete overhaul or any major repair that uses replacement piston rings, pistons, or bearings, for example, the engine should be run-in on a dynamometer prior to release for service.

The dynamometer is a device for applying specific loads to an engine to determine if the engine will perform to published specifications and to permit a physical inspection for leaks of any kind. It is an excellent method for detecting improper tune-up, misfiring injectors, low compression and other malfunctions, and may save an engine from damage at a later date.

The operating temperature within the engine affects the operating clearances between the various moving parts of the engine and determines to a degree how the parts will wear.

NOTICE:
Thermostats are required to control the coolant flow and to help maintain a constant engine temperature. Therefore, be sure that they are in place and fully operative or the engine may overheat during the run-in. Furthermore, a deaeration line must be installed in the uppermost portion of the engine to prevent any overheat problems during run-in.

The rate of water circulation through the engine on a dynamometer should be sufficient to avoid having the engine outlet water temperature more than 5.6°C (10°F) higher than the water inlet temperature. A 5.6°C (10°F) rise across an engine is recommended; however, an 8.3°C (15°F) temperature rise maximum is permitted.

11.8.1 The Basic Engine

A basic engine includes only those components actually necessary to run the engine. The addition of any engine driven accessories will result in a brake horsepower figure less than the values shown in the Engine Run-In Check. The fan and battery-charging alternator typify accessories not considered on the basic engine.

Since the DDEC system requires a source of electrical power to operate the Electronic Unit Injectors, all DDEC equipment should be connected and operating properly. In addition, a fully charged battery must be connected to the system. Refer to OEM guidelines.

In situations where other than basic engine equipment is used during the test, a proper record of this fact should be made on the Engine Test Report. The effects of additional equipment on engine performance should then be considered when evaluating test results.

(Rev. 2004) *All information subject to change without notice.*
6SE483 0401 Copyright © 2004 DETROIT DIESEL CORPORATION

11.8.2 Chassis Dynamometer Room Ventilation Recommendations

For accurate dynamometer readings during a Series 60 engine run-in, the chassis dynamometer room *must*be properly ventilated. See Figure 11-1.

CAUTION:

Diesel engine exhaust and some of its constituents are known to the State of California to cause cancer, birth defects, and other reproductive harm.

- **Always start and operate an engine in a well ventilated area.**
- **If operating an engine in an enclosed area, vent the exhaust to the outside.**
- **Do not modify or tamper with the exhaust system or emission control system.**

40527

Figure 11-1 California Proposition 65 Warning

If an engine is tested on a dynamometer located in an area without proper ventilation, the engine will be subject to high ambient air temperatures. High air inlet temperatures can result in false low power readings on the dynamometer.

To help ensure accurate dynamometer readings, the dynamometer room should have a ceiling-mounted fan with a 850 to 1133 m^3/min (30,000 to 40,000 ft^3 /min) capacity. This will provide proper ventilation of exhaust gases and heat radiated by the operating engine.

In situations where air circulation and proper room cooling are questionable, Detroit Diesel recommends the use of an additional 368 m^3 /min (13,000 ft^3 /min) or greater capacity barrel-type ram air fan. This should be portable so that it can be conveniently placed three to five feet (approximately one to two meters) in front of the truck and aimed directly at the charge air cooler.

 Copyright © 2004 DETROIT DIESEL CORPORATION

11.8.3 Dynamometer Test and Run-in Procedure

The function of the dynamometer is to absorb and measure the engine output. Its basic components are a frame, provisions for engine mounting, the absorption unit, a heat exchanger, and a torque loading and measuring device.

The engine is connected through a universal coupling to the absorption unit. The load on the engine may be varied from zero to maximum by decreasing or increasing the resistance in the unit. The amount of power absorbed in a water brake type dynamometer, as an example, is governed by the volume of fluid within the working system. The fluid offers resistance to a rotating motion. By controlling the volume of water in the absorption unit, the load may be increased or decreased as required.

The power absorbed is generally measured in torque (lb·ft) or Non a suitable scale. This value for a given engine speed will show the brake horsepower developed in the engine by the following formula, see Figure 11-2.

$$BHP = \frac{T_1 \times RPM}{5250} \qquad kW = \frac{T_2 \times RPM}{9429}$$

WHERE;

BHP	=	BRAKE HORSEPOWER, hp
kW	=	POWER, kW
T_1	=	TORQUE, ft·lb
T_2	=	TORQUE, N·m
RPM	=	ENGINE SPEED, r/min
5250	=	DYNAMOMETER CONSTANT
9429	=	DYNAMOMETER CONSTANT

21483

Figure 11-2 Formulas for Brake Power Developed in the Engine

Some dynamometers indicate direct brake horsepower readings. Therefore, the use of the formula is not required when using these units.

During the actual operation, all data taken should be recorded immediately on an Engine Test Report, see Figure 11-3.

(Rev. 2004) *All information subject to change without notice.*
6SE483 0401 Copyright © 2004 DETROIT DIESEL CORPORATION

11.8.3.1 Instrumentation

Certain instrumentation is necessary so that data required to complete the Engine Test Report may be obtained. The following list contains the minimum amount of instruments and the proper location of the fittings on the engine so that the readings represent a true evaluation of engine conditions.

- ☐ Oil pressure gage installed in one of the engine main oil galleries (DDEC data can also be used)
- ☐ Water temperature gage installed in the thermostat housing or water outlet manifold
- ☐ Adaptor for connecting a pressure gage or water manometer to the crankcase
- ☐ Fuel pressure gage at the rear of the cylinder head

In some cases, gages reading in pounds per square inch are used for determining pressures while standard characteristics are given in inches of mercury or inches of water. It is extremely important that the scale of such a gage be of low range and finely divided if accuracy is desired. This is especially true of a gage reading in lb/in.^{2}, the reading of which is to be converted to inches of water. The following conversion factors may be helpful.

NOTICE:
Before starting the run-in or starting the engine for any reason following an overhaul, it is of extreme importance to observe the instructions; see "Preparation for a First Time Start:" refer to section 11.1. Failure to follow instructions could result in engine damage.

Gage reading = (lb/in.^{2}) x 27.7 = inches of water

Gage reading = (lb/in.^{2}) x 2.04 = inches of mercury

11.8.3.2 Run-in Procedure

Use the following procedure for preparation of engine run-in. See Figure 11-3, part A.

1. Fill the lubrication system as outlined under Lubrication System , "Preparation for a First Time Start." Refer to section 11.1.
2. Prime the fuel system as outlined under Fuel System, "Preparation for a First Time Start." Refer to section 11.1.
3. Make a preliminary valve clearance adjustment before the engine is started. Refer to section 12.2.
4. Make a preliminary injector timing check before starting the engine. Refer to section 12.2.
5. Ensure that the turbocharger has been prelubricated by adding oil to the turbocharger oil inlet or by pressurizing the lubrication system.
6. Check to be sure all test stand water valves, fuel valves, etc. are open.
7. Inspect the exhaust system, checking that it is properly connected to the engine.

 Copyright © 2004 DETROIT DIESEL CORPORATION

Use the following procedures for engine run-in:

1. See Figure 11-1 for exhaust caution before preceeding. Start the engine with minimum dynamometer resistance.

NOTICE:
All Series 60 engines should be operated at idle for at least one minute after starting to ensure oil supply and pressure to the turbocharger bearings. Inadequate lubrication will result in bearing damage.

2. Set the engine throttle at idle speed; idle for 30 seconds. Record oil pressure and water temperature values on the engine Test Report; see Figure 11-3, Part B. Check all connections to be sure there are no leaks.
3. The Engine Test Report sample, see Figure 11-3, establishes the sequence of events and specifications for the test and run-in. Also, refer to section 11.5, *"Operating Conditions"* which presents the engine operating characteristics. These characteristics will be a guide for tracing faulty operation or lack of power. After checking the engine performance at idle speed and being certain the engine and dynamometer are operating properly, increase the engine speed to half speed and apply the load indicated on the Warm-Up - 5 minutes; see Figure 11-3, Part C. Complete leak information.

(Rev. 2004) *All information subject to change without notice.*
6SE483 0401 Copyright © 2004 DETROIT DIESEL CORPORATION

SERIES 60 ENGINE TEST REPORT

Date: _____ Unit Number: _____
Repair Order Number: _____ Model Number: _____
PROM I.D.: _____ Max. N/L RPM: _____
Rated F/L RPM: _____
Idle RPM: _____

A. PRESTART

1. PRIME LUBE OIL SYSTEM	2. PRIME FUEL OIL SYSTEM	3. FILL COOLING SYSTEM

B. START-UP AND IDLE FOR 30 SECONDS

START_____ STOP _____ OIL PRESSURE _____ WATER TEMPERATURE _____

C. WARM-UP — 5 MINUTES **START** _____ **STOP** _____

RPM MAX. SPEED	LOAD 50%	OIL PRESSURE	WATER TEMPERATURE
1. LUBE OIL LEAKS	2. FUEL OIL LEAKS	3. COOLANT LEAKS	4. LOOSE BOLTS

D. RUN-IN — 5 MINUTES **START** _____ **STOP** _____

RPM MAX. SPEED	LOAD 75%	OIL PRESSURE	WATER TEMPERATURE

E. FINAL RUN-IN — 20 MINUTES **START** _____ **STOP** _____

RPM MAX. SPEED	LOAD 100%	CRANKCASE PRESSURE AT F/L	EXHAUST BACK PRESSURE AT F/L
LUBE OIL PRESS. AT F/L	LUBE OIL TEMP. AT F/L	FUEL OIL TEMP. AT F/L	FUEL OIL PRESSURE AT F/L
WATER TEMP. AT F/L	TURBO BOOST PRESS. AT F/L	LUBE OIL PRESSURE AT IDLE	IDLE RPM

REMARKS:

OK _____ Reject _____ Dynamometer Operator _____ Date _____

20867

Figure 11-3 Series 60 Engine Test Report Form

 Copyright © 2004 DETROIT DIESEL CORPORATION

4. See Figure 11-1 for exhaust caution before preceeding. Run the engine at this speed and load for 5 minutes to allow sufficient time for the coolant temperature to reach the normal operating range. Record length start and stop times, speed, brake horsepower, coolant temperature and lubricating oil pressure on the Engine Test Report; see Figure 11-3, Part D.
5. See Figure 11-1 for exhaust caution before preceeding. Run the engine at each speed and rating for the length of time indicated in the Engine Run-In Schedule. During this time, engine performance will improve as new parts begin to seat in.
6. Inspect the engine for fuel oil, lubricating oil and water leaks.
7. Upon completion of the run-in and inspection, remove the load from the dynamometer and reduce the engine speed gradually to idle and then stop the engine.
8. Record all data requested; see Figure 11-3, Part E.

NOTE:
Allow the engine to idle with no load for 4 or 5 minutes in order for the turbocharger to cool and reduce speed before shutdown.

After all the tests have been made and the Engine Test Report is completed, see Figure 11-3, Part D., the engine is ready for final test, see Figure 11-3, Part E. This portion of the test and run-in procedure will assure the engine owner that his engine has been rebuilt to deliver factory rated performance at the same maximum speed and load which will be experienced in the installation.

If the engine has been shut down for one hour or longer, it will be necessary to have a warm up period of five minutes at the same speed and load used for warm-up. If piston rings or bearings have been replaced as a result of problems during the warm-up, the entire run-in must be repeated as though the test and run-in procedure were started anew.

All readings observed during the final run-in should fall within the range specified in the "Operating Conditions", refer to 11.5, and should be taken at full load unless otherwise specified. Following is a brief discussion of each condition to be observed.

- ☐ The engine water temperature should be taken during the last portion of the run-in at full load. It should be recorded and should be within the specified range.
- ☐ The lubricating oil pressure should be recorded in kPa or lb/in.^{2} after being taken at engine speeds indicated in the "Operating Conditions," refer to section 11.5.
- ☐ Check the crankcase pressure while the engine is operating at maximum run-in speed. Attach a manometer to the oil dipstick opening to measure crankcase pressure.

(Rev. 2004) *All information subject to change without notice.*
6SE483 0401 Copyright © 2004 DETROIT DIESEL CORPORATION

The following steps are necessary to complete the final Engine Repair Schedule.

1. Determine the maximum rated brake horsepower and the full-load speed to be used during the final run-in.
2. Apply this load to the dynamometer.
3. The engine should be run at this speed and load for five minutes.

NOTE:
While making the final run-in, the engine should develop the maximum rated brake horsepower indicated for the speed at which it is operating. If this brake horsepower is not developed, the cause should be determined and corrections made.

4. All information, see Figure 11-3, Part E, should be recorded.
5. After the prescribed time for the final run-in has elapsed, remove the load from the dynamometer and reduce the engine speed gradually to idle speed and then stop the engine.
6. A final inspection must be made. This inspection will provide final assurance that the engine is in proper working order. During this inspection, the engine is also made ready for any brief delay in delivery or installation which may occur. This is accomplished by rustproofing the fuel system, (refer to section 13.13.2) and adding a rust inhibitor to the cooling system, (refer to section 13.13.4).
7. Change the lubricating oil filters.

 Copyright © 2004 DETROIT DIESEL CORPORATION

(Rev. 2004) *All information subject to change without notice.*
6SE483 0401 Copyright © 2004 DETROIT DIESEL CORPORATION

12 ENGINE TUNE-UP

Section **Page**

12.1 ENGINE TUNE-UP PROCEDURES 12-3

12.2 VALVE LASH, INJECTOR HEIGHT (TIMING) AND JAKE BRAKE® LASH ADJUSTMENTS 12-5

12.3 ENGINE TUNE-UP PROCEDURES FOR THE SERIES 60G ENGINE ... 12-25

12.4 VALVE LASH FOR THE SERIES 60G ENGINE 12-27

 Copyright © 2004 DETROIT DIESEL CORPORATION

12.1 ENGINE TUNE-UP PROCEDURES

The Series 60 engine is equipped with Detroit Diesel Electronic Control system (DDEC). Since DDEC replaces any mechanical governing devices, and the fuel injectors are electronically controlled, it is unnecessary to perform engine speed adjustments.

CAUTION:

To avoid injury from accidental engine startup while servicing the engine, disconnect/disable the starting system.

CAUTION:

To avoid injury from contact with rotating parts when an engine is operating with the air inlet piping removed, install an air inlet screen shield over the turbocharger air inlet. The shield prevents contact with rotating parts.

NOTICE:

To prevent possible damage, do not perform engine tune-up procedures or engine repair without first disconnecting the engine cranking motor and/or batteries.

The turbocharger compressor inlet shield, J 26554-A, must be used anytime the engine is operated with the air inlet piping removed. See Figure 12-1.

 Copyright © 2004 DETROIT DIESEL CORPORATION

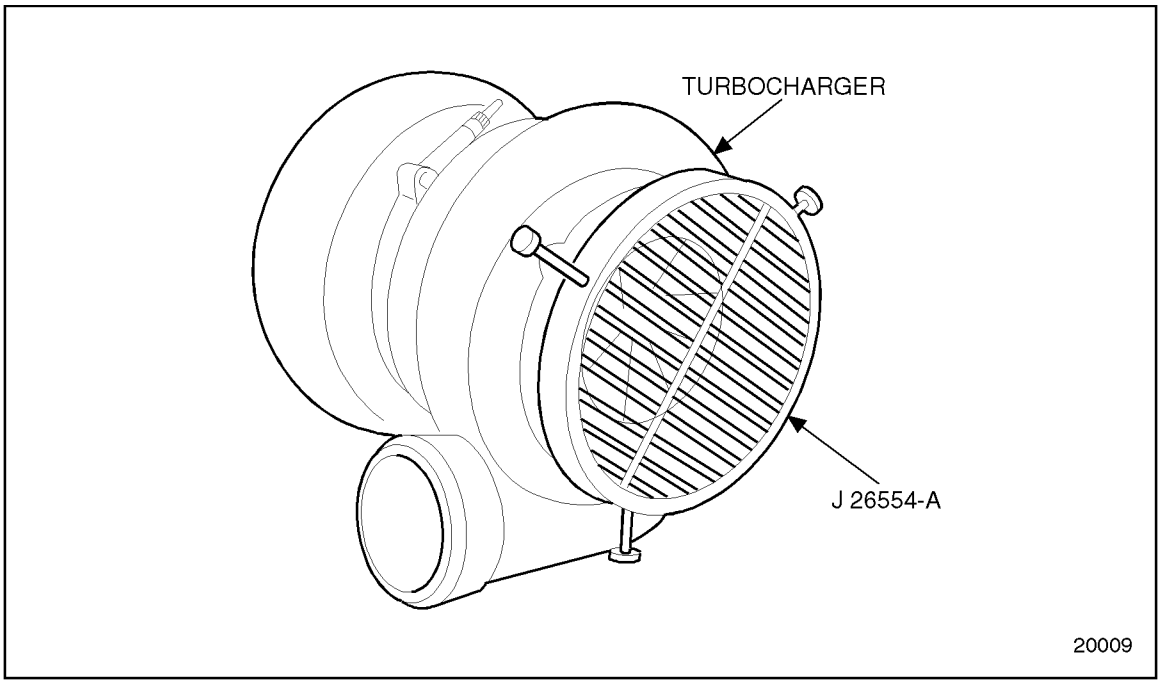

Figure 12-1 Turbocharger Compressor Inlet Shield

The shield helps prevent foreign objects from entering and damaging the turbocharger and will prevent the mechanic from accidentally touching the impeller.

The tune-up procedure for the Series 60 engine consists of intake and exhaust valve clearance adjustments, fuel injector height adjustments, and Jake Brake® lash adjustments. These adjustments should be made with the engine cold. Refer to section 12.2 and refer to section 12.2.1.

(Rev. 2004) *All information subject to change without notice.*
6SE483 0401 Copyright © 2004 DETROIT DIESEL CORPORATION

12.2 VALVE LASH, INJECTOR HEIGHT (TIMING) AND JAKE BRAKE® LASH ADJUSTMENTS

Accurate adjustment of clearance between valve buttons, intake and exhaust valves is important if maximum performance and economy are to be obtained.

Likewise, injector height should be properly maintained.

To ensure efficient engine performance and extended valve and injector service life, an initial valve lash and injector height measurement/adjustment requirement has been established.

Effective immediately, the valve lash and injector heights on all Series 60 engines must be measured and, if necessary, adjusted at the initial period listed in Table 12-1.

NOTICE:

Failure to measure valve clearances and injector heights at the required initial period and make necessary adjustments may result in gradual degrading of engine performance and reduced fuel combustion efficiency.

Engine Application	Initial Valve Lash and Injector Height Measurement/Adjustment Period
Vehicle Engines	60,000 miles (96,000 km) or 24 months (Whichever comes first)
Stationary or Industrial Engines	45,000 miles (72,000 km) or 1,500 hours (Whichever comes first)
Marine Engines	1,500 hours

Table 12-1 Measurement/Adjustment Period

Once the initial measurements and adjustments have been made, any adjustments beyond this point should be made only as required to maintain satisfactory engine performance.

NOTE:
This is a change from the original recommendation, which required checking and (if necessary) adjusting valve lash and injector heights at 120,000 miles (190,000 km) for vehicle engines or at 2,500 hours for non-vehicle engines.

NOTE:
On engines equipped with a Jake Brake®, measure valve lash and injector height before removing any brake housings. Only remove the brake housings necessary to provide access for adjustment.

 Copyright © 2004 DETROIT DIESEL CORPORATION

Intake and exhaust valve clearance and fuel injector height are adjusted by means of an adjusting set screw and locknut located at the valve end of the rocker arm. See Figure 12-2.

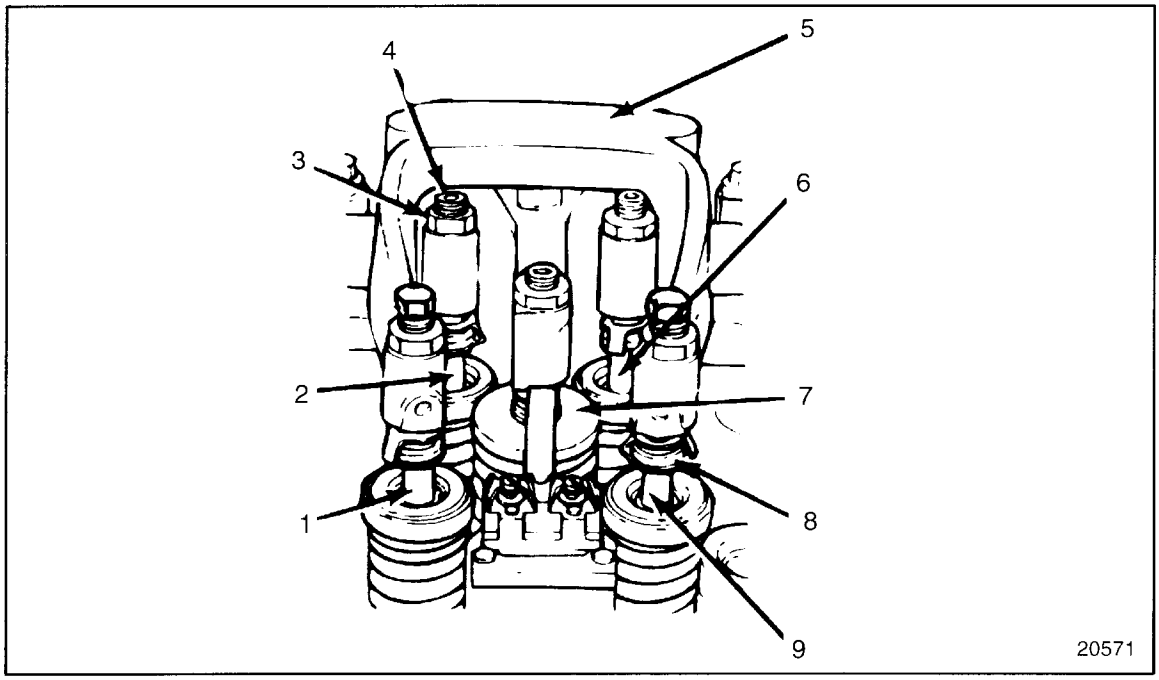

1. Exhaust Valve
2. Intake Valve
3. Locknut
4. Adjusting Set Screw
5. Exhaust Rocker Arm Assembly
6. Intake Valve
7. Fuel Injector Follower
8. Valve Button
9. Exhaust Valve

Figure 12-2 Valve and Fuel Injector Rocker Arm Assembly Components

NOTE:
Ensure the height gage seats on the machined surface with the tip in the pilot hole. Foreign material in the pilot hole or on the machined surface may prevent accurate setting of the injector height.

(Rev. 2004) *All information subject to change without notice.*
6SE483 0401 Copyright © 2004 DETROIT DIESEL CORPORATION

The fuel injector height is measured using the required Injector Height Gage as listed in Table 12-2. On engines equipped with a Jake Brake®, move the handle on the injector height gage to the alternate position, 90 degrees to the shank. A height gage locating hole is provided in the injector body on the machined surface contacted by the injector clamp near the solenoid. See Figure 12-3.

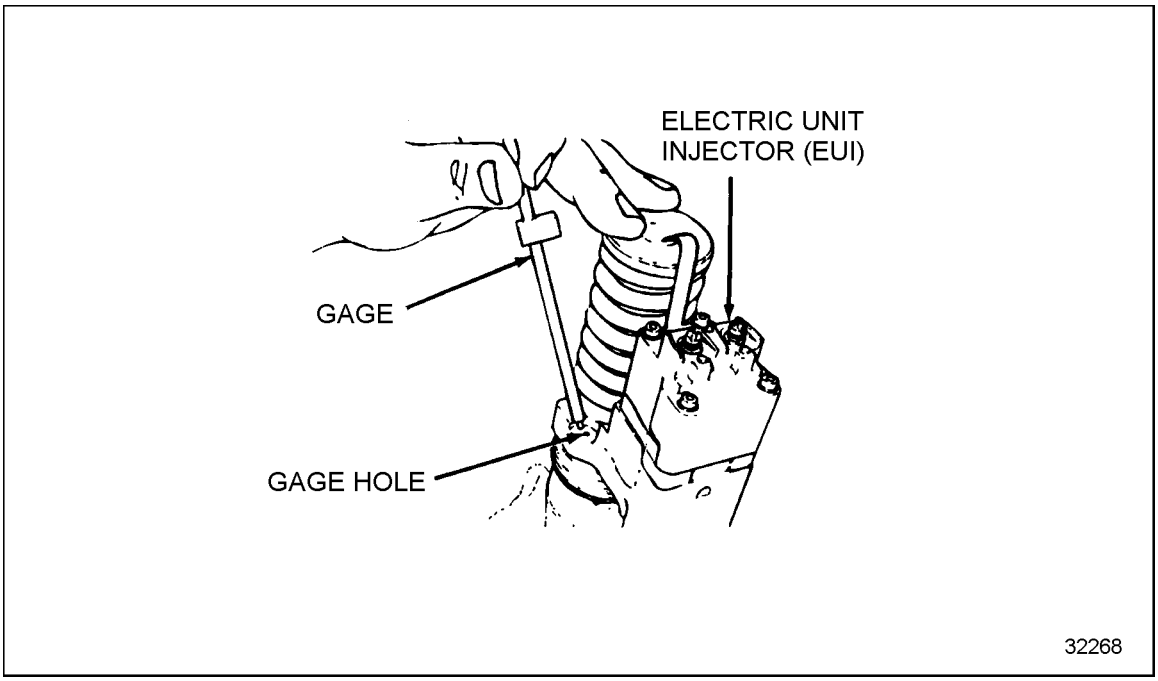

Figure 12-3 Using Timing Gage on DDEC II, DDEC III, and DDEC IV

Components ‡	Setting Dimensions	Tolerance †
FUEL INJECTOR HEIGHTS Models: 6067GT40, 6067WT40, 6067WU40,6067GU40, 6063WU00, 6063GU00,6067WU60, 6067GU60, 6067GU91 (All DDEC I and DDEC II / 1986 - 1993)	78.2 mm (3.079 in.) Use tool J 35637-A	77.95 - 78.45 mm (3.069 - 3.089 in.)
FUEL INJECTOR HEIGHTS Models: 6064TKXX, 6063TKXX, 6063EKXX, 606XGKXX, 606XWKXX, 606XSKXX (All DDEC III 1994-1997)	78.8 mm (3.102 in.) Use tool J 39697 32J cam	77.55 - 79.05 mm (3.053 - 3.112 in.)
FUEL INJECTOR HEIGHTS Models: 6067TKXX, 606XPKXX, 606XGKXX (1997-98 DDEC IV and later 1997 DDEC III)	80.3 mm (3.161 in.) Use tool J 42665 47J cam	80.05 - 80.55 mm (3.152 - 3.171 in.)
FUEL INJECTOR HEIGHTS Models: 6067EKXX, 606XBKXX, 606XMKXX, 606XLKXX, 606XHKXX, 606XFKXX (1998 & 1999 DDEC IV)	81.0 mm (3.189 in.) Use tool J 42749 65J cam 92J cam	80.75 - 81.25 mm (3.179 - 3.199 in.)

 Copyright © 2004 DETROIT DIESEL CORPORATION

FUEL INJECTOR HEIGHTS Models: § 6067BKXX, MKXX, HKXX 6067MKXX 606XBKXX 606XMKXX	82.1 mm (3.23 in.) Use tool J 45002 w/101J cam 81.0 mm (3.189 in.) Use tool J 42749 w/92J cam 82.1 mm (3.23 in.) Use tool J 45002 w/107J cam on off-highway units only 82.1 mm (3.23 in.) Use tool J 45002 w/107J cam on off-highway units only	0.8128 mm (0.032 in.)
FUEL INJECTOR HEIGHTS Models: 6062HKXX, 6062TKXX (2000-2003)	81.0 mm (3.189 in.)	80.75 - 81.25 mm 3.179 - 3.199 in.)
INTAKE VALVE CLEARANCE	0.203 mm (0.008 in.)	0.127 - 0.280 mm (0.005 - 0.011 in.)
EXHAUST VALVE CLEARANCE - * "U" Models: 6067GT40, 6067WT40, 6067WU40, 6067GU40, 6063XX00, (1986 - 1990 All DDEC I & Early DDEC II)	0.508 mm (0.020 in.)	0.432 - 0.584 mm (0.017 - 0.023 in.)
EXHAUST VALVE CLEARANCE - * "H" Models: 606XWUXX, 606XGUXX, 606XXKXX, (1991 - 1999 All DDEC IV, III and later DDEC II)	0.660 mm (0.026 in.)	0.584 - 0.736 mm (0.023 - 0.029 in.)
EXHAUST VALVE CLEARANCE - * "H" Models: 6062HKXX, 6062TKXX (2000 - 2003)	0.711 mm (0.028 in.)	0.635 - 0.787 mm (0.025 - 0.031 in.)

*"H" valves have a machined identification ring above the valve lock groove. "U" valves do not. Refer to section 1.4 for valve identification.

† When setting injector heights or valve clearances, the component should be set to the "Setting Dimension" shown.

‡ XX Any character in these positions, set to the adjacent column.

§ Check option label on valve cover for correct setting.

Table 12-2 Checking Tolerance Chart

NOTE:
When setting valve lash clearance or injector height, always set them to the dimension listed in Table 12-2.

(Rev. 2004) *All information subject to change without notice.*
6SE483 0401 Copyright © 2004 DETROIT DIESEL CORPORATION

Adjust the valves and set the fuel injector heights as follows:

1. Disconnect starting power for engine.
2. Remove the engine valve rocker cover as outlined. Refer to section 1.6.2for one-piece, refer to section 1.6.3 for two-piece rocker cover, and refer to section 1.6.5for three-piece rocker cover.
3. Insert a 3/4 in. drive breaker bar or ratchet into the square hole in the center of the crankshaft pulley.
4. Bar the engine in the direction of rotation and observe the intake and exhaust valve rollers at any cylinder that is close to TDC (top dead center). See Figure 12-4. Choose a cylinder that has the exhaust valves almost completely closed. Just as the exhaust valves are closing, the intake valves will start to open. This is the valve overlap period.

 Copyright © 2004 DETROIT DIESEL CORPORATION

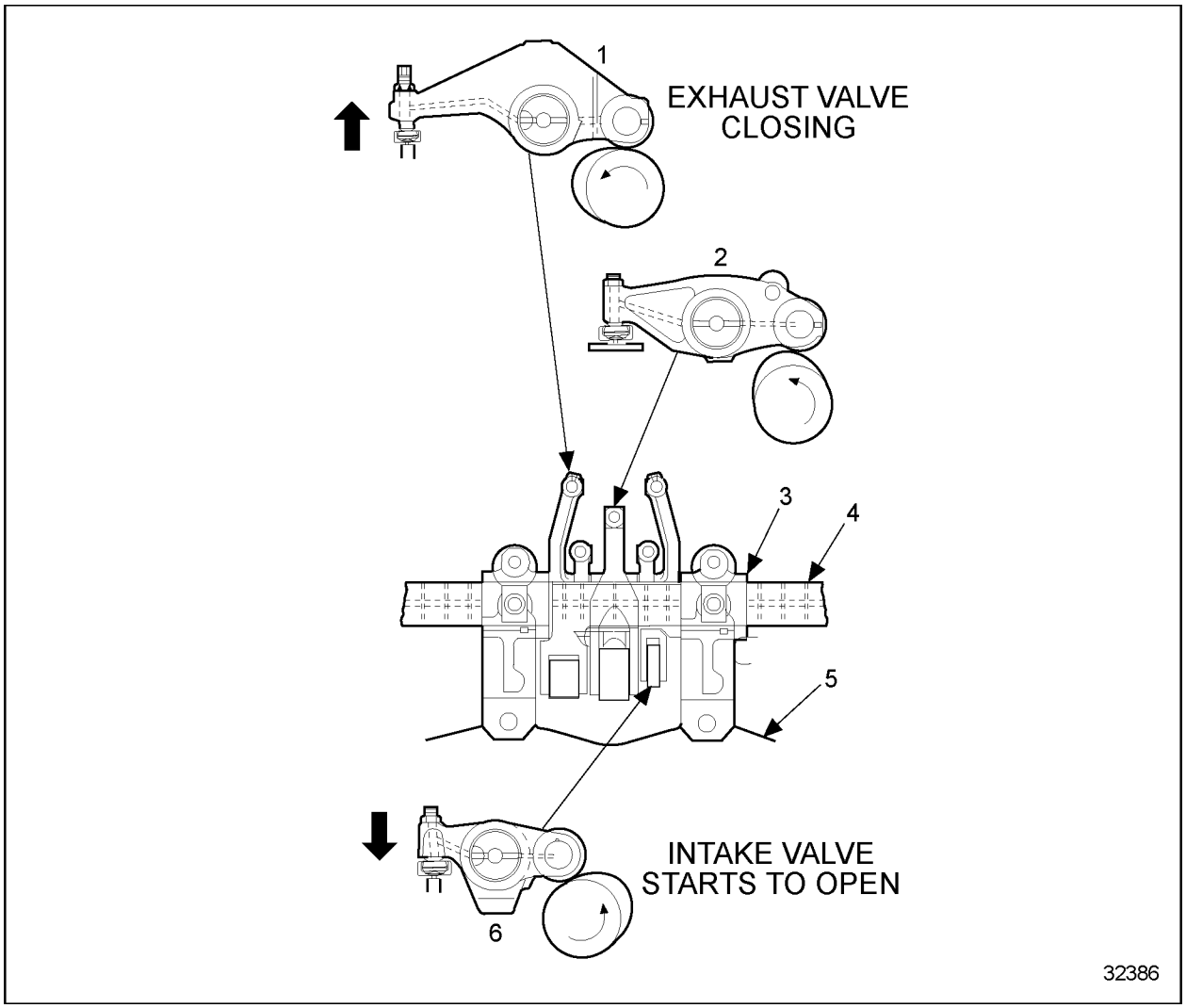

1. Exhaust Valve Rocker Arm Assembly
2. Fuel Injector Rocker Arm Assembly
3. Camshaft
4. Rocker Arm Shaft
5. Cylinder Head
6. Intake Rocker Arm Assembly

Figure 12-4 Valve Overlap Period

(Rev. 2004) *All information subject to change without notice.*
6SE483 0401 Copyright © 2004 DETROIT DIESEL CORPORATION

5. Stop engine rotation at the time of valve overlap. Note which cylinder this is, and follow the sequence listed in Table 12-3 to correctly set valves and injector heights. The timing can be started with any cylinder in valve overlap.

Cylinder with Valve Overlap	Set Valves on Cylinder No.	Set Injector Height on Cylinder No.
6	1	5
2	5	3
4	3	6
1	6	2
5	2	4
3	4	1

Table 12-3 Valve Lash and Injector Height Adjustment Sequence

 Copyright © 2004 DETROIT DIESEL CORPORATION

NOTICE:
Never set the valves and injector of the same cylinder at the same time. Doing this will result in engine damage.

6. To adjust the intake valves, insert a 0.203 mm (0.008 in.) feeler gage between the tip of the valve stem and the valve button at the end of the rocker arm. See Figure 12-5.

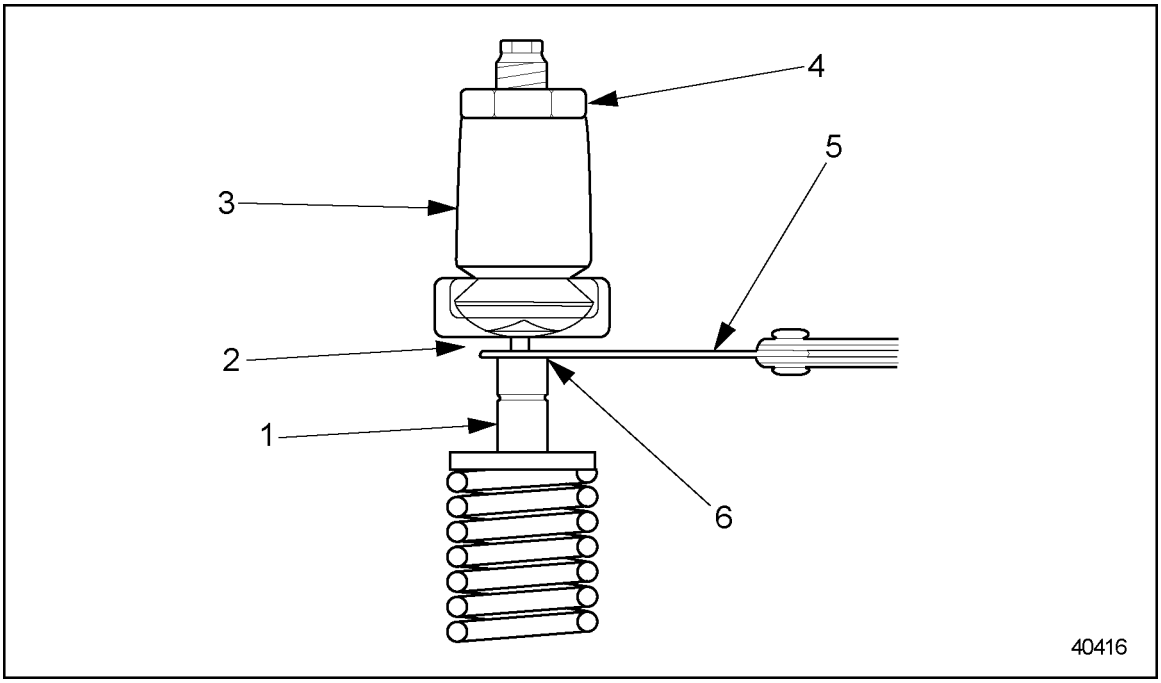

1. Intake Valve
2. Valve Button
3. Intake Rocker Arm Assembly
4. Locknut
5. Feeler Gage
6. Tip of Intake Valve

Figure 12-5 Intake Valve Adjustment

7. Loosen the locknut, and turn the adjusting set screw until the feeler gage produces an even smooth pull between the valve stem and valve button.
8. Torque the locknut to 41 - 47 N·m (30 - 35 lb·ft) and remove the feeler gage. Reinsert the feeler gage to ensure that the adjustment did not change when the locknut was tightened. Readjust as necessary.

(Rev. 2004) *All information subject to change without notice.*
6SE483 0401 Copyright © 2004 DETROIT DIESEL CORPORATION

9. The exhaust valves are adjusted the same way as the intake valves, except use a 0.660 mm (0.026 in.) feeler gage (1991 and later models only). Early models (pre-1991 models) use 0.508 mm (0.020 in.) feeler gage as listed in Table 12-2. See Figure 12-6.

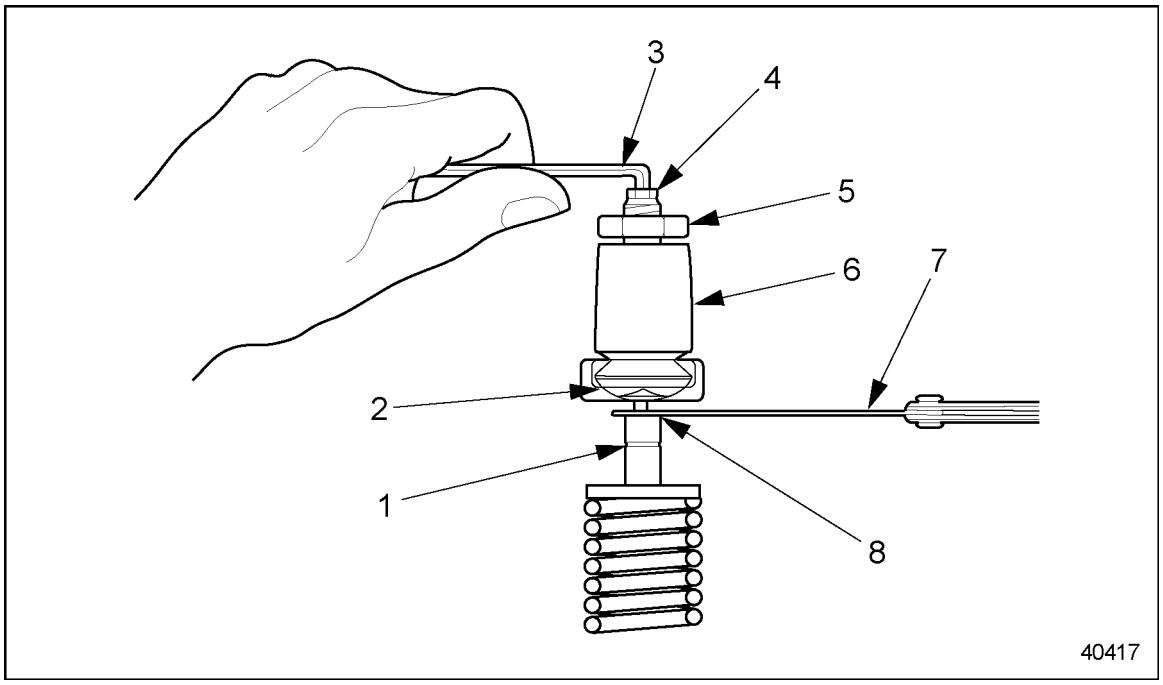

1. Location of Identification Groove
2. Valve Button
3. Allen Wrench
4. Adjusting Screw
5. Locknut
6. Exhaust Rocker Arm Assembly
7. Feeler Gage
8. Tip of Exhaust Valve

Figure 12-6 Exhaust Valve Adjustment

NOTE:
Effective with all 1991 model year engines, a change was made to the exhaust valve material which requires a different exhaust valve lash setting. Refer to section 1.4 for exhaust valve identification.

10. After each set of intake and exhaust valves is adjusted, adjust the corresponding injector listed in Table 12-3. Injector height settings and tools are listed in Table 12-2.
11. For natural gas applications the valves are adjusted the same way as on the diesel engine, except that a 0.036 in. (0.914 mm) feeler gage is used for exhaust valves and a 0.011 in. (0.279 mm) feeler gage is used for intake valves.
12. Adjust the fuel injector height for the engine models in parentheses by placing the small end of the height gage in the hole provided in the fuel injector body, with the flat of the gage toward the fuel injector plunger. See Figure 12-3. The injector height settings for Series 60 engines are listed in Table 12-2.

 Copyright © 2004 DETROIT DIESEL CORPORATION

13. Loosen the fuel injector rocker arm locknut and turn the adjusting set screw until the extended part (flag) of the gage will just pass over the top of the injector follower. An accurate "feel" will be developed. The objective is to adjust all six injectors to the same feel.
14. Torque the locknut to 41 - 47 N·m (30 - 35 lb·ft). Check the adjustment with the height gage and, if necessary, readjust the set screw. Remove the height gage. See Figure 12-7.

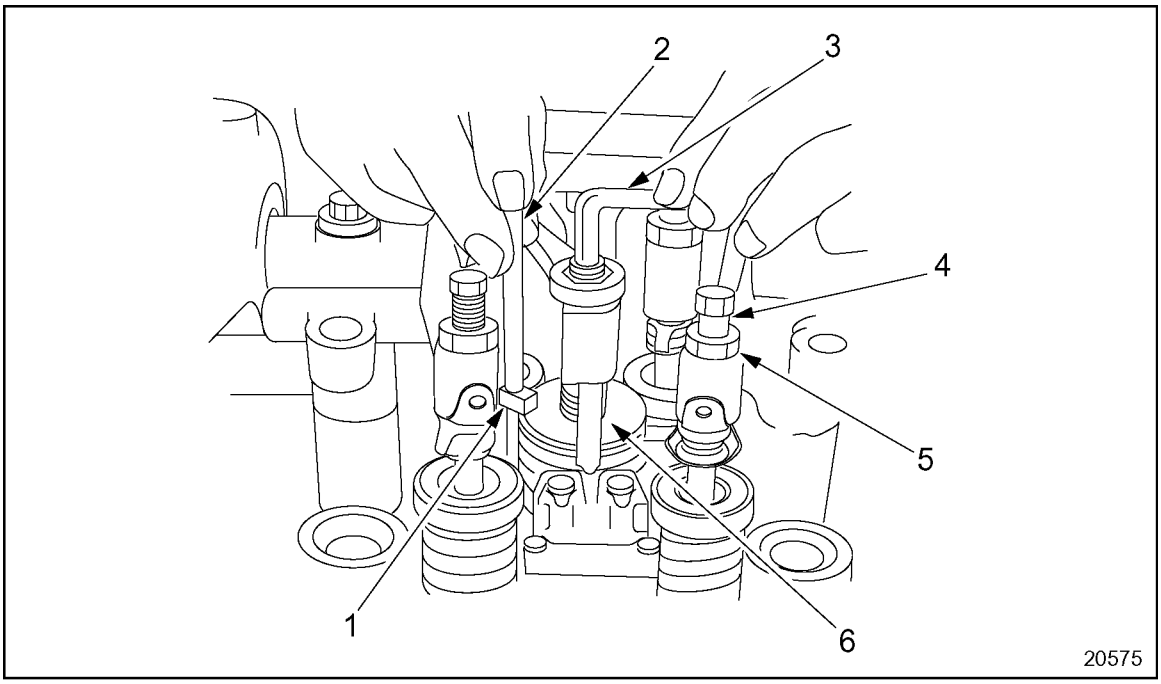

1. Height Gage Flag
2. Height Gage
3. Allen Wrench (3/16")
4. Set Screw
5. Locknut
6. Fuel Injector Follower

Figure 12-7 Fuel Injector Height Adjustment

15. Refer to the adjusting sequence listed in Table 12-3 and proceed to the next cylinder in the adjustment sequence.
16. Bar the engine over in the direction of normal rotation until the next cylinder in the adjustment sequence is in its valve overlap period.
17. Repeat the valve adjustment and fuel injector height adjustments procedures until all the valves and fuel injectors have been adjusted.
18. Replace the engine rocker cover.
19. Reconnect starting power to the engine.

(Rev. 2004) *All information subject to change without notice.*
6SE483 0401 Copyright © 2004 DETROIT DIESEL CORPORATION

Adjust the valves and N3 fuel injector settings as follows:

1. Disconnect starting power for engine.
2. Remove the engine valve rocker cover as outlined. Refer to section 1.6.2 for one-piece, refer to section 1.6.3 for two-piece rocker cover, and refer to section 1.6.5 or three-piece rocker cover.
3. Insert a 3/4 in. drive breaker bar or ratchet into the square hole in the center of the crankshaft pulley.
4. Bar the engine in the direction of rotation and observe a cylinder where the injector rocker arm is just beginning to depress the injector plunger, both the intake and exhaust valves should be closed.
   - [a] Stop turning the engine and mount a magnetic base dial indicator so you can monitor the upward lift of travel of that injector lobe.
   - [b] Set the pedestal of the dial indicator on the top of the injector cam roller. Adjust the pedestal so it can travel the entire upward movement of the lobe.
   - [c] Continue to slowly bar the engine over in the direction of rotation until the dial indicator shows no more upward lift. The needle of the dial indicator will stop moving indicating maximum lift.
   - [d] This is the point of maximum injector roller lift, the injector can now be set.
   - [e] If you rotate the engine beyond this point you will have to bar the engine over in the opposite direction at least 1/4 turn and then bar the engine over in the direction of rotation until maximum injector roller lift is obtained.

 Copyright © 2004 DETROIT DIESEL CORPORATION

5. Stop engine rotation and note which cylinder this is, and follow the sequence listed in Table 12-4 to correctly set injector and valves.

Max. injector lobe travel on Cylinder No.	Adjust Injector on Cylinder No.	Adjust Valves on Cylinder No.
6	6	2
2	2	4
4	4	1
1	1	5
5	5	3
3	3	6

Table 12-4 Valve Lash and N3 Injector Setting Adjustment Sequence

6. This injector can now be set using this procedure:
   [a] Loosen the locknut on the adjusting screw at least two full turns.
   [b] Tighten the adjusting screw until the injector plunger bottoms out, torque value should be 4.51 N·m (40 in·lbs).
   [c] Back the adjusting screw off 3/4 of a turn 0.75 mm± 0.25mm and tighten the locknut to 41-47 N·m (30-35 lb·ft).
   [d] The injector is now adjusted.
7. Adjust the valves on the corresponding cylinders listed in Table 12-4 .

(Rev. 2004) *All information subject to change without notice.*
6SE483 0401 Copyright © 2004 DETROIT DIESEL CORPORATION

NOTICE:
Never set the valves and injector of the same cylinder at the same time. Doing this will result in engine damage.

8. To adjust the intake valves, insert a 0.203 mm (0.008 in.) feeler gage between the tip of the valve stem and the valve button at the end of the rocker arm. See Figure 12-8.

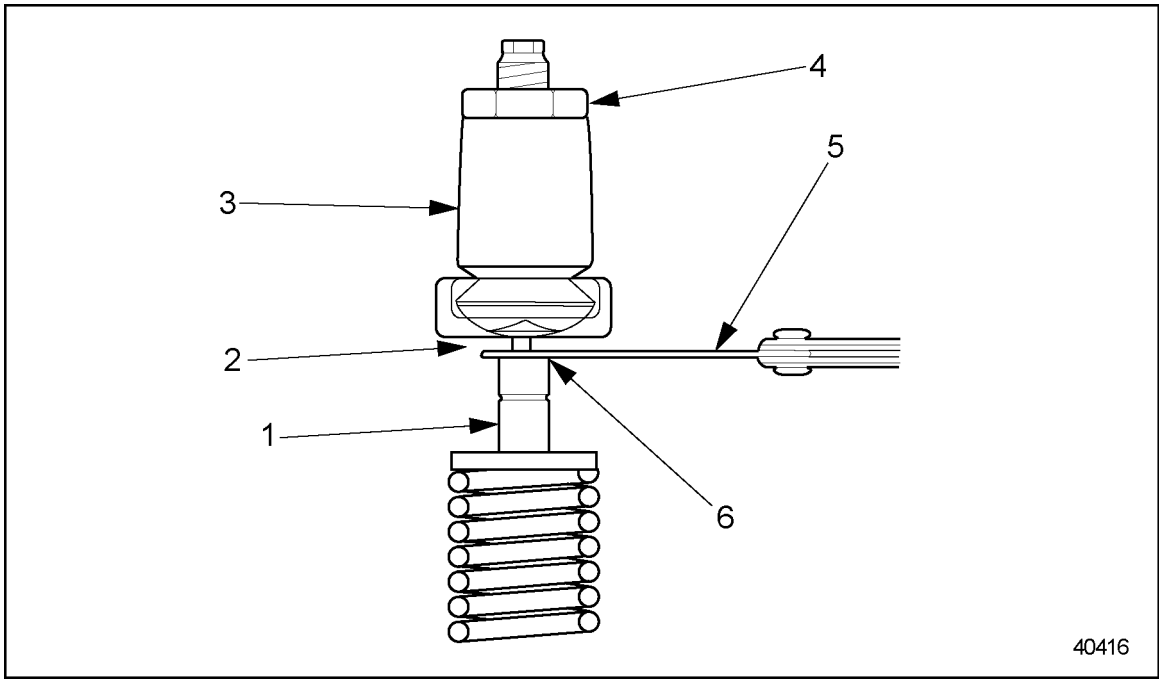

1. Intake Valve
2. Valve Button
3. Intake Rocker Arm Assembly
4. Locknut
5. Feeler Gage
6. Tip of Intake Valve

Figure 12-8 Intake Valve Adjustment

9. Loosen the locknut, and turn the adjusting set screw until the feeler gage produces an even smooth pull between the valve stem and valve button.
10. Torque the locknut to 41 - 47 N·m (30 - 35 lb·ft) and remove the feeler gage. Reinsert the feeler gage to ensure that the adjustment did not change when the locknut was tightened. Readjust as necessary.

 Copyright © 2004 DETROIT DIESEL CORPORATION

11. The exhaust valves are adjusted the same way as the intake valves, except use a 0.508 mm (0.020 in.) feeler gage see Figure 12-9.

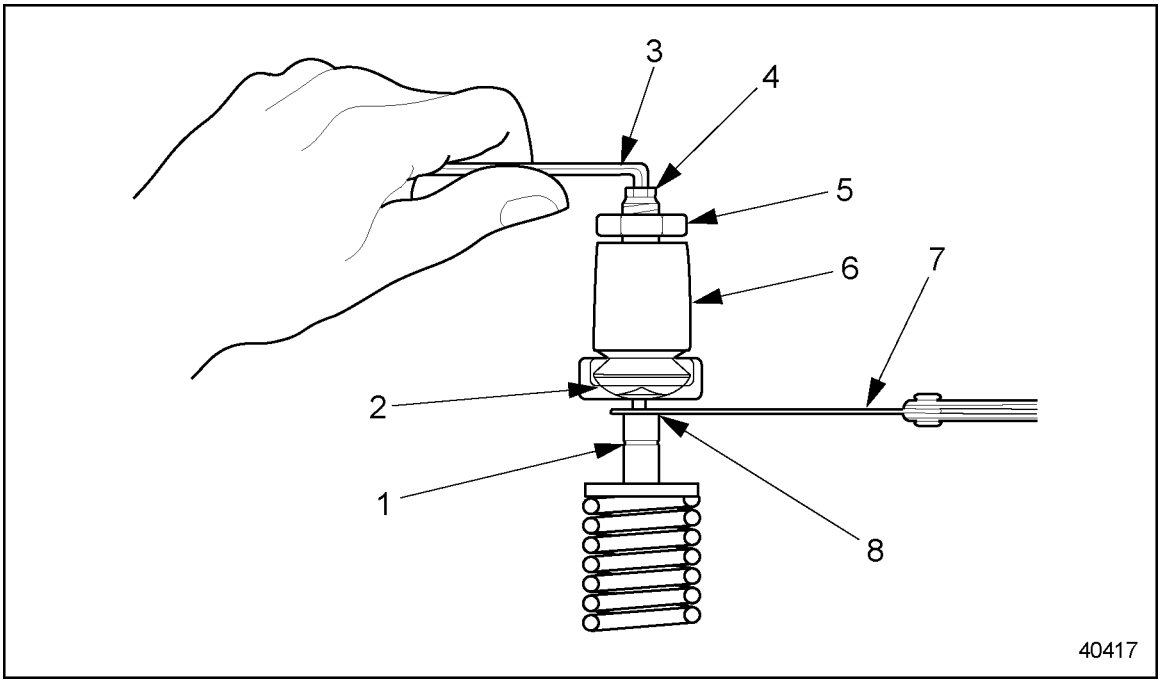

1. Location of Identification Groove
2. Valve Button
3. Allen Wrench
4. Adjusting Screw
5. Locknut
6. Exhaust Rocker Arm Assembly
7. Feeler Gage
8. Tip of Exhaust Valve

Figure 12-9 Exhaust Valve Adjustment

12. Repeat steps 4 thru 11 until all injectors and valves have been set.
13. Install the engine rocker cover. Refer to section 1.6.8 for a one-piece rocker cover and refer to section 1.6.9 for two and three piece rocker covers.
14. Reconnect starting power to the engine.

(Rev. 2004) *All information subject to change without notice.*
6SE483 0401 Copyright © 2004 DETROIT DIESEL CORPORATION

12.2.1 Slave Piston Adjustment (Jake Brake® Lash)

Refer to information listed in Table 12-5 for the correct slave piston adjustment specification.

NOTICE:
The slave piston adjustment procedure must be strictly followed. Failure to use the proper adjustment procedure will result in poor engine brake performance, serious engine damage, or both.

NOTE:
Slave piston clearance settings for the different engine models are not the same.

MODEL NUMBER/DISPLACE-MENT/MODEL YEAR	ENGINE BRAKE	SLAVE PISTON ADJUSTMENT
6067WU40 11.1L PRE - 1991	760/760A	0.660 mm (0.026 in.)
6067GU40 12.7L PRE - 1991	760/760A	0.508 mm (0.020 in.)
6067WU60 11.1L 1991 - 93	760A	0.660 mm (0.026 in.)
6067GU60 12.7L 1991 - 93	765	0.660 mm (0.026 in.)
6067WK60 11.1L 1994 - 97	760A	0.660 mm (0.026 in.)
6067GK60 12.7L 1994 - 97	765	0.660 mm (0.026 in.)
6067WK28 11.1L 1994 - 97	760A	0.660 mm (0.026 in.)
6067GK28 12.7L 1994 - 97	765	0.660 mm (0.026 in.)
6067EK60 11.1L 1998 DDEC IV	760B	0.6584 mm (0.023 in.)
6067PK60 12.7L 1998 DDEC IV	765A	0.6584 mm (0.023 in.)
6067TK60 12.7L 1998 DDEC IV	765A	0.6584 mm (0.023 in.)
6067FK6X, 6067BK6X, 6067HK6X 14L 1999 DDEC IV	770	0.6584 mm (0.023 in.)
6067MK6X 12.7L 1999 DDEC IV	770	0.6584 mm (0.023 in.)
6067LK6X 11.1L 1999 DDEC IV	760B	0.6584 mm (0.023 in.)
6067MK28, 6067MK45, 6067MK57, 6067MK60 — 12.7L Standard — 2000	790	0.660 mm (0.026 in.)
6067BK28, 6067BK45, 6067BK57, 6067BK60 — 12.7L Premium – 2000	790	0.660 mm (0.026 in.)
6067HK45, 6067HK60 — 14L U.S. — 2000	790A	0.660 mm (0.026 in.)
6067WK28, 6067WK60 — 11.1L — 2000	790B	0.660 mm (0.026 in.)
6067LK28, 6067LK45, 6067LK60 — 11.1L — 2000	790B	0.660 mm (0.026 in.)

 Copyright © 2004 DETROIT DIESEL CORPORATION

MODEL NUMBER/DISPLACEMENT/MODEL YEAR	ENGINE BRAKE	SLAVE PISTON ADJUSTMENT
6063GK60, 6067GK28, 6067GK45, 6067GK91, 6067PK62, 6067TK28, 6067TK60, 6067TK62 — 12.7L — 2000	790B	0.660 mm (0.026 in.)
6067HK62 — 14L Australian — 2000	790C	0.660 mm (0.026 in.)
6067MK28, 6067MK45, 6067MK57, 6067MK60 — 12.7L Standard — 2000	795	0.813 mm (0.032 in.)
6067BK28, 6067BK45, 6067BK57, 6067BK60 — 12.7L Premium – 2000	795	0.813 mm (0.032 in.)
6067HK45, 6067HK60 — 14L U.S. — 2000	795	0.813 mm (0.032 in.)
6067WK28, 6067WK60 — 11.1L — 2000	795	0.813 mm (0.032 in.)
6067LK28, 6067LK45, 6067LK60 — 11.1L — 2000	795	0.813 mm (0.032 in.)
6063GK60, 6067GK28, 6067GK45, 6067GK91, 6067PK62, 6067TK28, 6067TK60, 6067TK62 — 12.7L — 2000	795	0.813 mm (0.032 in.)
6067HK62 — 14L Australian — 2000	795	0.813 mm (0.032 in.)

X= Any digit.

Table 12-5 Jake Brake® Models and Slave Piston Settings

NOTE:
Make the following adjustment with the engine stopped and cold with oil temperature 140°F (60°C) or below. The exhaust valves on the cylinder to be adjusted must be in the closed position (rocker arm loose).

Adjustments must be made with the engine stopped and cold with the oil temperature at 60°C (140°F) or below. Exhaust valves on the cylinder *must* be in the *closed* position (rocker arm roller should be on the base circle of the camshaft).

(Rev. 2004) *All information subject to change without notice.*
6SE483 0401 Copyright © 2004 DETROIT DIESEL CORPORATION

NOTICE:
The slave piston adjustment procedure *must* be followed exactly. Failure to properly adjust Jake Brakes® will result in inefficient engine brake performance and may lead to severe engine or Jake Brake® damage.

1. Back out the bridge leveling screw in the slave piston assembly until the end of the screw is beneath the surface of the bridge in the slave piston assembly. See Figure 12-10.

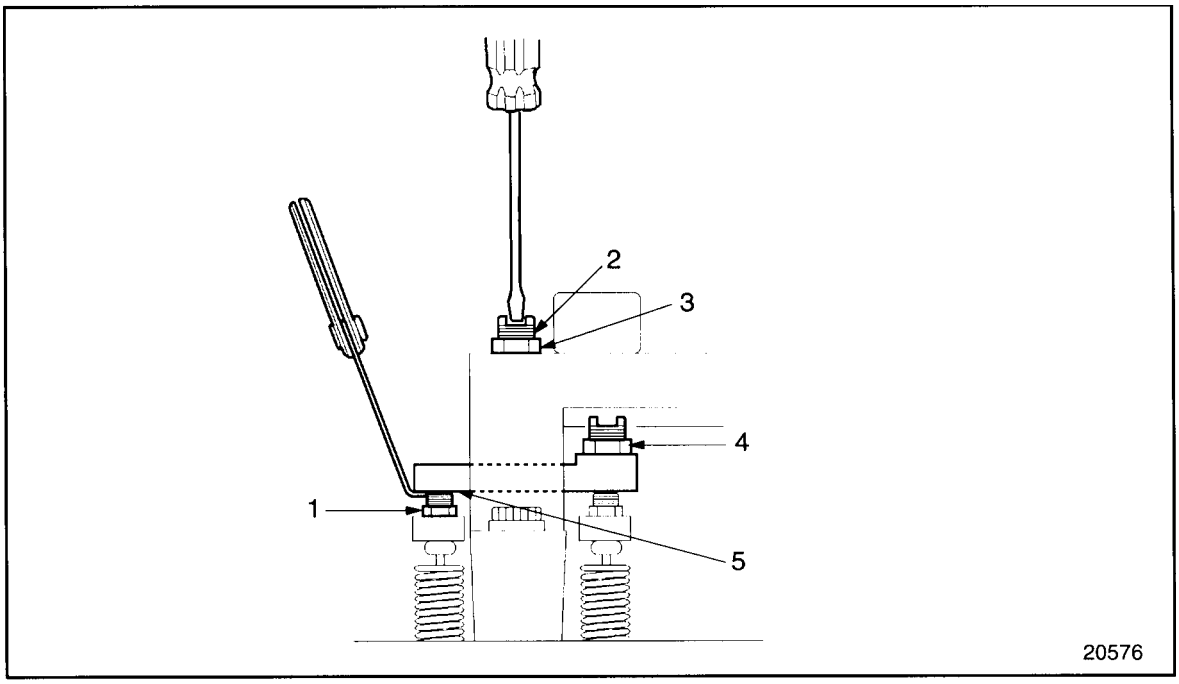

1. Rocker Arm Adjusting Screw and Locknut
2. Slave Piston Adjusting Screw
3. Locknut
4. Bridge Leveling Screw Locknut
5. Bridge

Figure 12-10 Adjusting Slave Piston Screw-Except 790/795

2. Place the required feeler gage listed in Table 12-5 between the solid side of the bridge (the side without the leveling screw) and the exhaust rocker arm adjusting screw.

NOTE:
The slave piston adjusting screws used in the Series 60 engine brake prior to August 1994 were reset screws. Reset screws are not to be dissembled in the field. Effective with August 1994 engines, reset screw assemblies were replaced with Power-Lash® assemblies.

Power-Lash® is a registered trademark of Jacobs Vehicle Systems™.

3. Turn the slave piston adjusting screw clockwise until a light drag is felt on the feeler gage.

 Copyright © 2004 DETROIT DIESEL CORPORATION

4. Hold the screw in this position and torque the locknut to 34 N·m (25 lb·ft). Remove the feeler gage.
5. Place the feeler gage from step 4 between the leveling screw and the rocker arm adjusting screw. Turn the leveling screw clockwise until a light drag is felt on the feeler gage. See Figure 12-11.

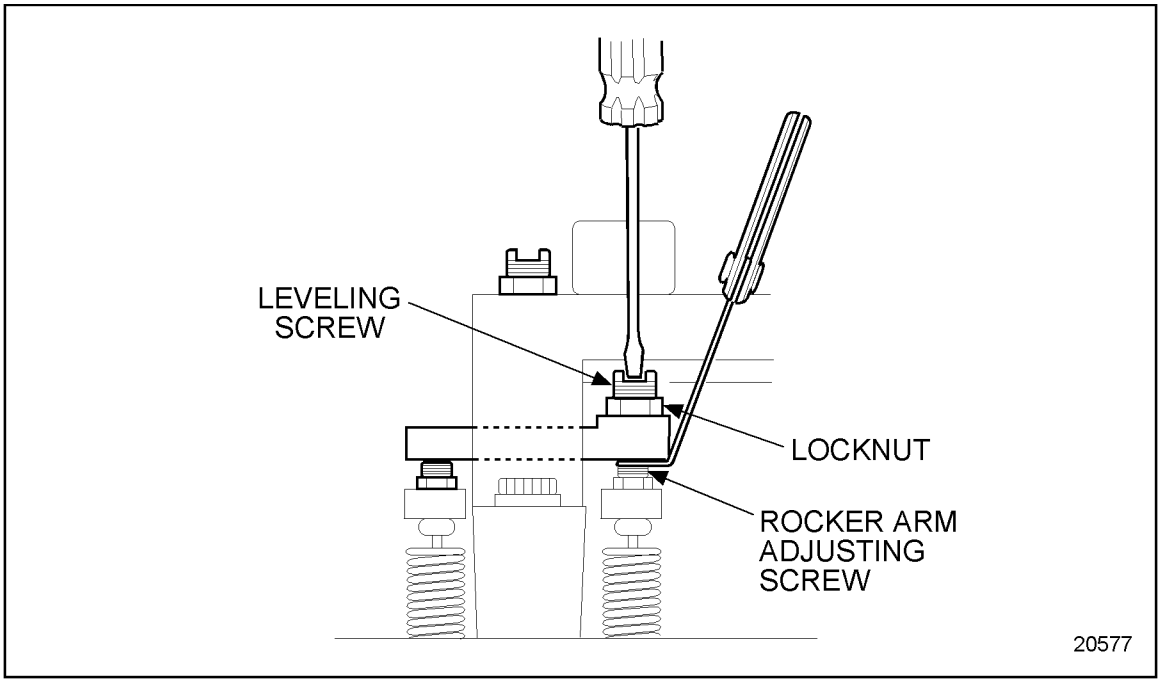

Figure 12-11 Adjusting Leveling Screw

6. Hold the leveling screw in this position and torque the locknut to 47 N·m (35 lb·ft).
7. Repeat the adjustment procedures in steps 1 through 6 for the remaining cylinders. Rotate the engine when necessary to put the exhaust valves in the closed position for slave piston adjustment.

Adjust Model 790/795 Jake Brake® slave piston lash as follows:

1. Turn in the adjusting screw until the solid side of the slave piston bridge assembly, contacts the exhaust valve and the valve springs begin to compress, then turn in one additional turn.

NOTE:
Wait at least 30 seconds for oil to be purged from the J-Lash adjusting screw. If oil is below room temperature (below 16 °C [60°F]), wait at least two minutes for oil to be purged from the J-Lash adjusting screw.

(Rev. 2004) *All information subject to change without notice.*
6SE483 0401 Copyright © 2004 DETROIT DIESEL CORPORATION

NOTICE:
Serious engine damage may occur from improper lash setting.

2. Using a 3/16 in. hex wrench, back out the adjusting screw ONLY until the correct size feeler gage (listed in Table 12-5) can be inserted between the solid side of the slave piston bridge assembly and the exhaust valve. See Figure 12-12.

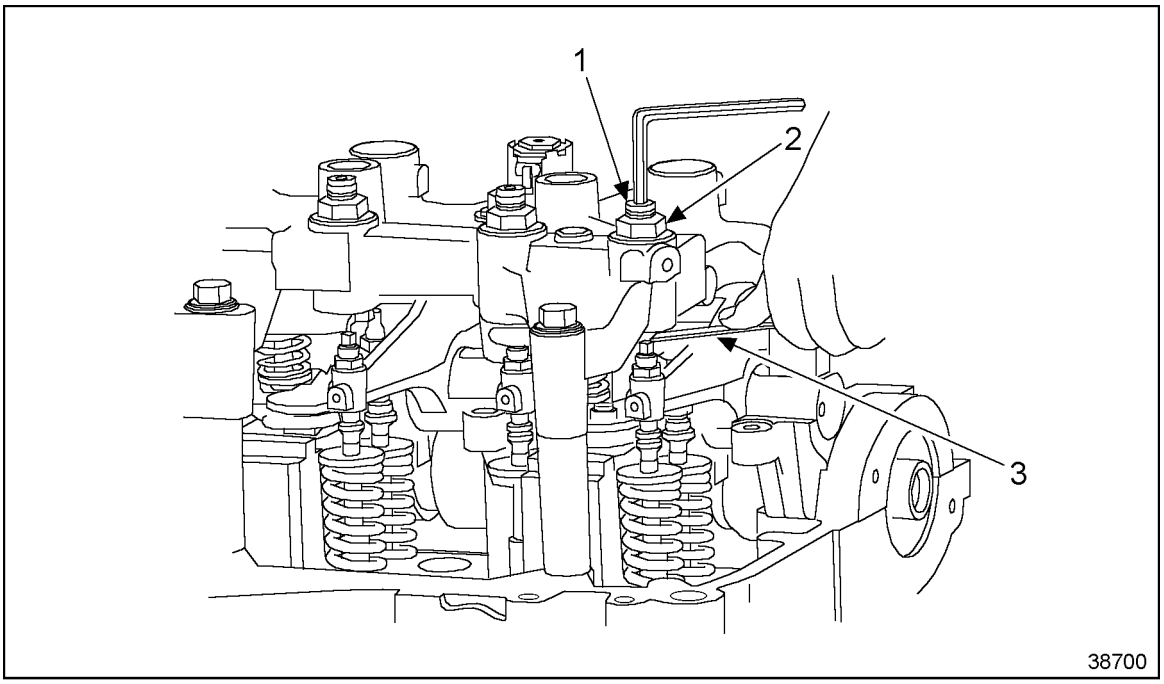

1. J-Lash Adjusting Screw
2. Slave Piston
3. Exhaust Valve Spring

Figure 12-12 Setting Slave Piston Lash

3. Adjust the adjusting screw so that a light drag is felt on the feeler gage. Do not back out the adjusting screw more than required to obtain a light drag on the feeler gage. Use a screwdriver to hold the adjusting screw in place and torque the lock nut to 38 N·m (28 lb·ft.). See Figure 12-12.

NOTE:
If the J-Lash adjusting screw is backed out until it no longer compresses the slave piston spring, oil will enter the screw and the adjustment will be incorrect. If this occurs, repeat step2 and step 3.

NOTE:
For Model 795 applications, skip to step 4.

4. Hold the solid adjusting screw in place and torque the locknut to 38 N·m (28 lb·ft).

 Copyright © 2004 DETROIT DIESEL CORPORATION

5. Recheck lash settings. If lash setting is incorrect, repeat step1 through step 3.

NOTE:
Once the engine brake has been run, you will not be able to check the engine brake adjustments for engines using J-Lash™ adjusting screws. This is due to oil retained in the J-Lash™ adjusting screw. If unsure of the adjustment, repeat step 1 and step 4.

6. Repeat step 1 through step 5 for the remaining slave piston on the same cylinder.
7. Repeat step 1 through step 5 for the remaining cylinders.

CAUTION:

To avoid injury, wear a face shield or goggles.

CAUTION:

To avoid injury from fire, contain and eliminate leaks of flammable fluids as they occur. Failure to eliminate leaks could result in fire.

8. Install all remaining components that were removed for this procedure.

NOTE:
Ensure that all wires are away from moving parts.

9. Complete the installation by installing the rocker cover. Refer to section 1.6.
10. Start and drive the vehicle to verify proper Jake Brake® performance.

(Rev. 2004) *All information subject to change without notice.*
6SE483 0401 Copyright © 2004 DETROIT DIESEL CORPORATION

12.3 ENGINE TUNE-UP PROCEDURES FOR THE SERIES 60G ENGINE

The Series 60G engine is equipped with Detroit Diesel Electronic Controls (DDEC III/IV).

The tune-up procedure for the Series 60G engine consists of intake and exhaust valve clearance adjustments and spark plug replacement. These procedures should be performed with the engine cold. See Figure 12-13 for the gas turbocharger compressor inlet shield.

 Copyright © 2004 DETROIT DIESEL CORPORATION

CAUTION:

To avoid injury from accidental engine startup while servicing the engine, disconnect/disable the starting system.

CAUTION:

To avoid injury from contact with rotating parts when an engine is operating with the air inlet piping removed, install an air inlet screen shield over the turbocharger air inlet. The shield prevents contact with rotating parts.

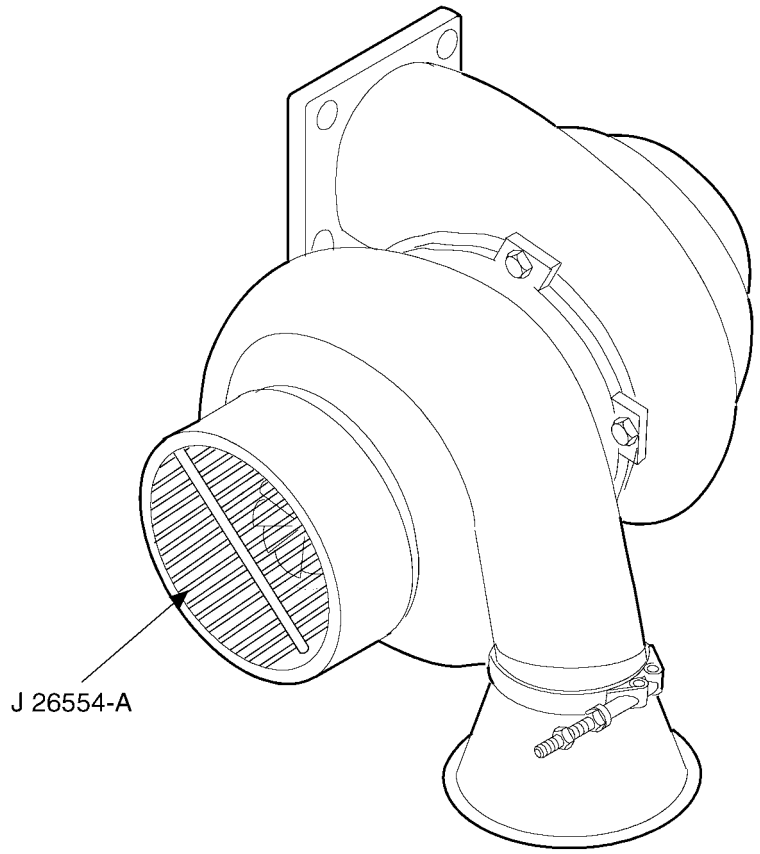

Figure 12-13 Turbocharger Compressor Inlet Shield (Series 60G Engine)

(Rev. 2004) *All information subject to change without notice.*
6SE483 0401 Copyright © 2004 DETROIT DIESEL CORPORATION

12.4 VALVE LASH FOR THE SERIES 60G ENGINE

Accurate adjustment of the clearance between the valve buttons and the intake and exhaust valves is important if maximum performance and economy are to be obtained.

Intake and exhaust valve clearance are adjusted by an adjusting set screw and locknut located at the valve end of the rocker arm. See Figure 12-14.

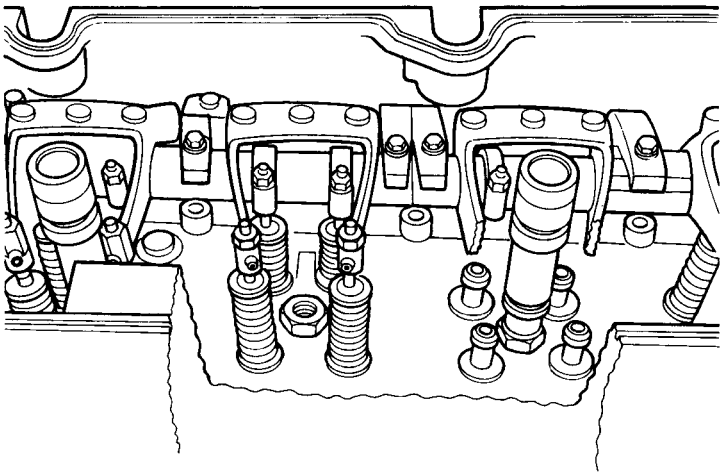

Figure 12-14 Valve Height Adjustment Components for the Series 60G Engine

 Copyright © 2004 DETROIT DIESEL CORPORATION

Bar the engine over clockwise until one of the cylinders has the intake and exhaust cam follower rollers on the base circle of the camshaft. Adjust all four valves at this position. Continue barring the engine over until the next cylinder is in position. Follow the timing valve circle chart until all of the valves have been adjusted. See Figure 12-15.

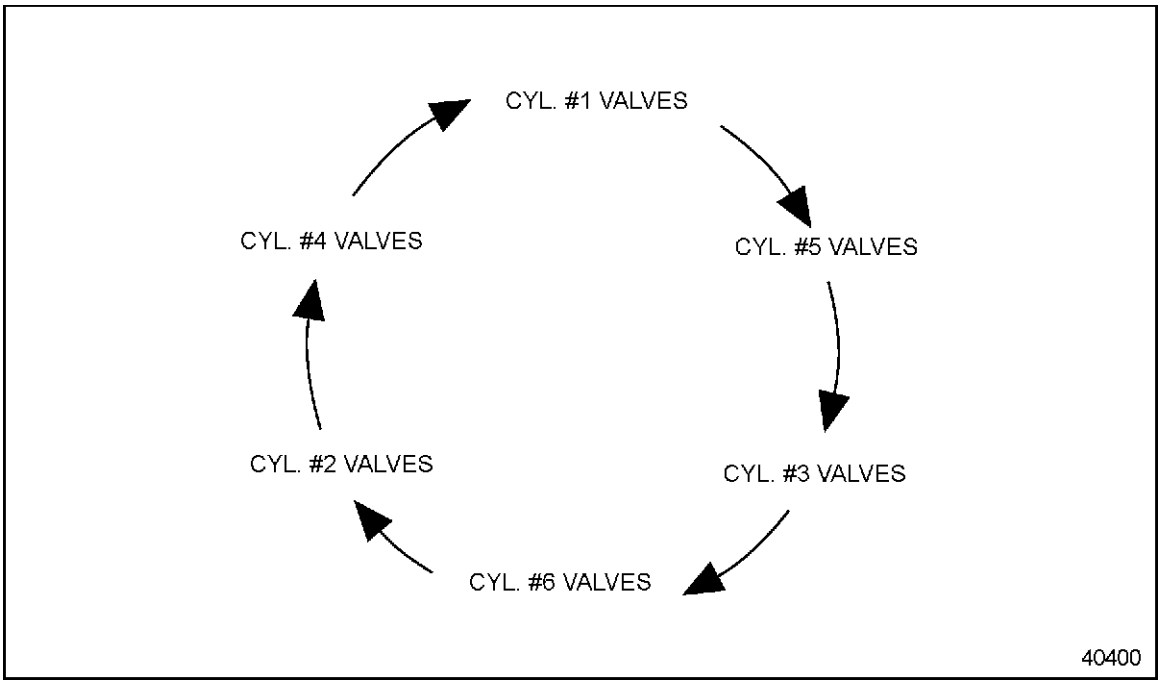

Figure 12-15 Timing Circle Chart for the Series 60G Engine

1. Disconnect starting power for the engine.
2. Remove the spark plug boots from the connection on the rocker cover.
3. Remove the engine valve rocker cover; refer to section 1.6.
4. Insert a 3/4 in. drive breaker bar or ratchet into the square hole in the center of the crankshaft pulley. Bar the engine over until both the intake and exhaust cam rollers are on the base circle of the camshaft. Stop engine rotation.

NOTE:
The cylinder number.

5. See Figure 12-15 and locate the cylinder. The timing circle can be started with any cylinder. Ensure the circle is completed to set all valves.

(Rev. 2004) *All information subject to change without notice.*
6SE483 0401 Copyright © 2004 DETROIT DIESEL CORPORATION

6. To adjust the intake valves, insert a 0.279 mm (0.011 in.) feeler gage between the tip of the valve stem and the valve button at the end of the rocker arm. See Figure 12-16.

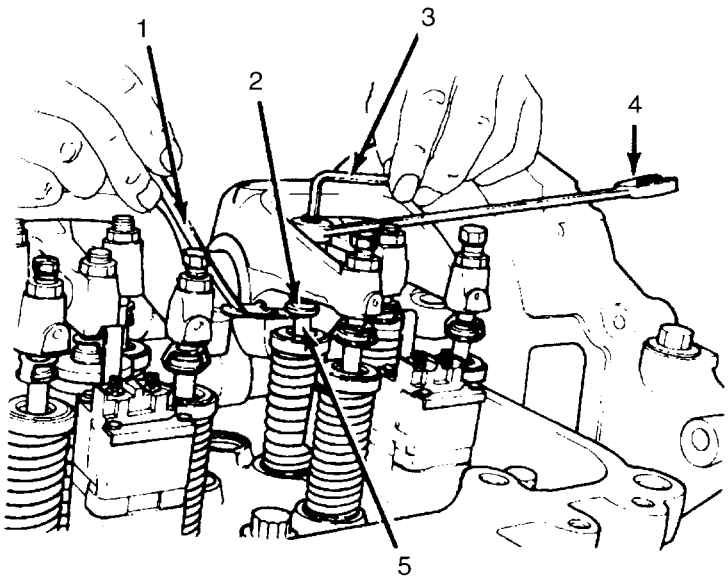

1. Feeler Gage
2. Valve Button
3. Allen Wrench (3/16 in.)
4. Wrench (9/16 in.)
5. Intake Valve Stem

Figure 12-16 Valve Clearance Adjustment Series 60G Engines

7. Loosen the locknut, and turn the adjusting set screw until the feeler gage produces an even or smooth pull between the valve stem and the valve button.
8. Torque the locknut to 41-47 N·m (30-35 lb·ft), and remove the feeler gage. Insert the feeler gage to ensure that the adjustment did not change when the locknut was tightened. Readjust as necessary.
9. The exhaust valves are adjusted the same way as the intake valves, except that a 0.914 mm (0.036 inch.) feeler gage is used.
10. Complete the adjustment of all four valves (two intake, two exhaust) for that cylinder before proceeding to the next step.
11. See Figure 12-15 and note the cylinder number, in parentheses, directly under the cylinder that just received the valve adjustment.

 Copyright © 2004 DETROIT DIESEL CORPORATION

(Rev. 2004) *All information subject to change without notice.*
6SE483 0401 Copyright © 2004 DETROIT DIESEL CORPORATION

13 PREVENTIVE MAINTENANCE

Section		Page
13.1	MAINTENANCE OVERVIEW	13-3
13.2	DAILY MAINTENANCE - ALL APPLICATIONS	13-4
13.3	DAILY MAINTENANCE - MARINE APPLICATIONS	13-5
13.4	MAINTENANCE OF MARINE ENGINES	13-6
13.5	MAINTENANCE OF VEHICLE ENGINES	13-11
13.6	MAINTENANCE OF ENGINES USED IN STATIONARY AND INDUSTRIAL APPLICATIONS	13-16
13.7	MAINTENANCE OF SERIES 60 DIESEL ENGINES FOR GENERATOR SET	13-22
13.8	MAINTENANCE OF SERIES 60G ENGINES FOR GENERATOR SET	13-25
13.9	LUBRICATING OIL AND FILTER CHANGE INTERVALS FOR GENSET	13-27
13.10	PREVENTIVE MAINTENANCE FOR THE SERIES 60G AUTOMOTIVE ENGINE (CITY TRANSIT COACH)	13-28
13.11	MAINTENANCE OF SERIES 60G AUTOMOTIVE ENGINES	13-31
13.12	LUBRICATING OIL AND FILTER CHANGE INTERVALS FOR GENSET (WITH HIGH SULFUR FUELS)	13-37
13.13	DESCRIPTION OF MAINTENANCE ITEMS	13-38
13.14	AIR SEPARATOR FILTER ELEMENT (MARINE)	13-75
13.15	DETECTING INTERNAL FUEL LEAKS	13-79
13.16	CLEANING CONTAMINATED LUBRICATION OIL SYSTEM	13-87

 Copyright © 2004 DETROIT DIESEL CORPORATION

13.1 MAINTENANCE OVERVIEW

The lubrication and preventive maintenance schedule is intended as a guide for establishing a preventive maintenance schedule. The suggestions and recommendations for preventive maintenance should be followed as closely as possible to obtain long life and best performance from the Series 60 engine. The intervals indicated are time or miles of actual operation.

The time or mileage increments shown apply only to the maintenance function described. These functions should be coordinated with other regularly scheduled maintenance such as chassis lubrication.

The daily instructions pertain to routine or daily starting of an engine and not to a new engine or one that has not been operated for a considerable period of time. For new or stored engines, carry out the instructions given under "Preparation for a First Time Start." Refer to section 11.1.

The daily maintenance of Series 60 engines is the same for all applications. Refer to section 13.2. Periodic maintenance of Series 60 engines is dependent on the application. For engines installed in stationary and industrial applications, refer to section 13.6. For engines installed in vehicles, refer to section 13.5.

 Copyright © 2004 DETROIT DIESEL CORPORATION

13.2 DAILY MAINTENANCE - ALL APPLICATIONS

The following items need to be inspected, serviced, corrected or replaced on a daily basis, as necessary:

- ☐ Lubricating oil, refer to section 13.13.1
- ☐ Fuel tank, refer to section 13.13.2
- ☐ Fuel lines and flexible hoses, refer to section 13.13.3
- ☐ Cooling system, refer to section 13.13.4
- ☐ Turbocharger, refer to section 13.13.8

(Rev. 2004) *All information subject to change without notice.*
6SE483 0401 Copyright © 2004 DETROIT DIESEL CORPORATION

13.3 DAILY MAINTENANCE - MARINE APPLICATIONS

The following items need to be inspected, serviced, corrected or replaced on a daily basis, as necessary:

- ☐ Lubricating oil, refer to section 13.13.1
- ☐ Fuel tank, refer to section 13.13.2
- ☐ Fuel lines and flexible hoses, refer to section 13.13.3
- ☐ Cooling system, refer to section 13.13.4
- ☐ Turbocharger, refer to section 13.13.8
- ☐ Marine gear oil level, refer to section 13.13.32

 Copyright © 2004 DETROIT DIESEL CORPORATION

13.4 MAINTENANCE OF MARINE ENGINES

Marine engine components must be maintained at various intervals.

13.4.1 Fuel Cooler

The component must be inspected, serviced, corrected or replaced as necessary at the given interval. Refer to section 13.13.37.

- ☐ Every 400 hours — Remove, clean, inspect.
- ☐ Every 4 years — Replace.

13.4.2 Fuel Injectors

The component must be inspected, serviced, corrected or replaced as necessary at the given interval. Refer to section 13.13.38.

- ☐ Every 1,000 hours — Replace on pleasure craft marine engine.
- ☐ Every 5,000 hours — Replace on commercial marine engine.

13.4.3 Vibration Damper

The component must be inspected, serviced, corrected or replaced as necessary at the given interval. Refer to section 13.13.39.

- ☐ Replace at time of engine overhaul.

13.4.4 Heat Exchanger

The component must be inspected, serviced, corrected or replaced as necessary at the given interval. Refer to section 13.13.36.

- ☐ Every 400 hours or 2 years (whichever comes first) — Clean and flush.
- ☐ Every year— Check low coolant level sensor operation.

(Rev. 2004) *All information subject to change without notice.*
6SE483 0401 Copyright © 2004 DETROIT DIESEL CORPORATION

13.4.5 Charge Air Cooler — Keel-Cooled Engine

The component must be inspected, serviced, corrected or replaced as necessary at the given interval. Refer to section 13.13.35.

- ☐ Every 5000 hours or 1 year (whichever comes first) — Clean and flush.

13.4.6 Raw Water System Zincs

The component must be inspected, serviced, corrected or replaced as necessary at the given interval. Refer to section 13.13.33.

- ☐ After the first 60 hours — Inspect for cavitation.
- ☐ Every 200 hours or 1 year (whichever comes first) — Inspect and replace on pleasure craft marine engine.
- ☐ Every 5000 hours or 1 year (whichever comes first) — Inspect and replace commercial marine engine.

13.4.7 Marine Gear

The component must be inspected, serviced, corrected or replaced as necessary at the given interval. Refer to section 13.13.32.

- ☐ Every 1000 hours — Replace gear oil and filter.
- ☐ Every 1000 hours — Check mounting bolts and pads and retighten or replace.
- ☐ Every 800 hours or 4 years (whichever comes first) — Replace gear oil cooler on pleasure craft marine.
- ☐ Every 10,000 hours or 4 years (whichever comes first) — Replace gear oil cooler on commercial marine engine.

13.4.8 Valve Lash and Injector Height

The component must be inspected, serviced, corrected or replaced as necessary at the given interval. Refer to section 1.3.

- ☐ After the first 1500 hours — Check and reset, if required.

 Copyright © 2004 DETROIT DIESEL CORPORATION

13.4.9 Crankcase Breather (in valve rocker cover)

The component must be inspected, serviced, corrected or replaced as necessary at the given interval. Refer to section 13.13.30.

- ☐ Every 1000 hours — Remove, clean.

13.4.10 Thermostats and Seals

The component must be inspected, serviced, corrected or replaced as necessary at the given interval. Refer to section 13.13.28.

- ☐ Every 400 hours or 2 years (whichever comes first) — Replace on pleasure craft marine engine.
- ☐ Every 10,000 hours or 2 years (whichever comes first) — Replace on commercial marine engine.

13.4.11 Engine Mounts

The component must be inspected, serviced, corrected or replaced as necessary at the given interval. Refer to section 13.13.24.

- ☐ Every 1000 hours — Check and retighten.

13.4.12 Air Separator Filter Element and Vacuum Limiter

The component must be inspected, serviced, corrected or replaced as necessary at the given interval. Refer to section 13.14.

- ☐ Every 250 hours — Clean and re-oil.
- ☐ Every 10,000 hours — Replace.

(Rev. 2004) *All information subject to change without notice.*
6SE483 0401 Copyright © 2004 DETROIT DIESEL CORPORATION

13.4.13 Water Pump

The component must be inspected, serviced, corrected or replaced as necessary at the given interval. Refer to section 13.13.5.

- ☐ Every 100 hours or 6 months (whichever comes first) — Inspect drain hole for plugging.

13.4.14 Fuel Filters

The component must be inspected, serviced, corrected or replaced as necessary at the given interval. Refer to section 13.13.14.

- ☐ Every 250 hours — Replace Spin-on primary and secondary fuel filters on heat exchanger-cooled pleasure craft marine engine.
- ☐ Every 250 hours — Replace Sea Pro 150 or 300 primary fuel filters and secondary spin-on filter on heat exchanger-cooled pleasure craft marine engine.
- ☐ When fuel level reaches top of element in see-thru cover — Replace element in Sea Pro 152 primary filter.
- ☐ Every 150 hours — Replace spin-on primary and secondary filter on keel-cooled commercial marine engines.
- ☐ Every 150 hours — Replace Sea Pro 150 or 300 primary fuel filters on keel-cooled commercial marine engines.

13.4.15 Lube Oil Filters

The component must be inspected, serviced, corrected or replaced as necessary at the given interval. Refer to section 13.13.13.

- ☐ Every 250 hours — Replace Spin-on lube oil filters on heat exchanger-cooled marine engine.

13.4.16 Air Cleaner

The component must be inspected, serviced, corrected or replaced as necessary at the given interval. Refer to section 13.13.12.

- ☐ Every 150 hours — Inspect element and clean or replace, as required.

13.4.17 Battery

The component must be inspected, serviced, corrected or replaced as necessary at the given interval. Refer to section 13.13.9.

- ☐ Every month — Inspect for charge.

 Copyright © 2004 DETROIT DIESEL CORPORATION

13.4.18 Engine Coolant

The component must be inspected, serviced, corrected or replaced as necessary at the given interval. Refer to section 13.13.16.

- ☐ Every 250 hours or 3 months — Test nitrite concentration and add supplemental coolant additives or dilute, as required.
- ☐ Every 4000 hours or 2 years — If installed, replace the required mix of Power Cool 3000 and water, or a 50/50 mix of Power Cool fully formulated ethylene glycol antifreeze and water, or a 50/50 mix of fully formulated propylene glycol and water. Drain, clean, and flush system before refill.
- ☐ Every 10,000 hours or 4 years — If installed, replace required mix of Power Cool Plus 6000 and water, or replace Power Cool Plus Marine antifreeze/water premix solution. Drain, clean, and flush system before refill.
- ☐ At engine overhaul — If installed, replace a 50/50 mix of phosphate-free TMC RP — 329 "Type A" (IEG) or TMC RP — 330 "Type A" (IPG) antifreeze and water. Drain, clean, and flush system before refill.
- ☐ Every 8000 hours or 6 years — If installed, replace 50/50 mix of NOAT coolant and water. Drain, clean, and flush system before refill.

13.4.19 Cooling System

The component must be inspected, serviced, corrected or replaced as necessary at the given interval. Refer to section 13.13.4.

- ☐ Every 500 hours — Inspect hoses. Replace, if required.

13.4.20 Fuel System

The component must be inspected, serviced, corrected or replaced as necessary at the given interval. Refer to section 2.

- ☐ Every 500 hours — Inspect hoses, except fire-resistant. Replace, if required.
- ☐ Every 1000 hours — Inspect fire-resistant hoses. Replace, if required.

13.4.21 Hoses

The component must be inspected, serviced, corrected or replaced as necessary at the given interval. Refer to section 13.13.3.

- ☐ Every 5 years — Replace.

(Rev. 2004) *All information subject to change without notice.*
6SE483 0401 Copyright © 2004 DETROIT DIESEL CORPORATION

13.5 MAINTENANCE OF VEHICLE ENGINES

Vehicle engine components must be maintained at various intervals.

13.5.1 7,500 Miles (12,000 km) Interval Maintenance

Every 7,500 miles (12,000 km), the following components must be inspected, serviced, corrected or replaced as necessary.

- ☐ Battery, refer to section 13.13.9
- ☐ Drive belts, refer to section 13.13.10
- ☐ Air compressor, refer to section 13.13.11

13.5.2 15,000 Miles (24,000 km) or 6 Month Interval Maintenance

Every 15,000 miles (24,000 km) or 6 months, the following components must be inspected, serviced, corrected or replaced as necessary.

- ☐ Air cleaner, refer to section 13.13.12

Likewise, the following components must be replaced every 15,000 miles (24,000 km) or 6 months.

- ☐ Lubricating oil, refer to section 13.13.1
- ☐ Lubricating oil filter, refer to section 13.13.13
- ☐ Fuel filter, refer to section 13.13.14
- ☐ Coolant filter and inhibitor, refer to section 13.13.16

13.5.3 30,000 Miles (48,000 km) or 12 month Interval Maintenance

Every 30,000 miles (48,000 km) or 12 months, the following components must be inspected, serviced, corrected or replaced as necessary.

- ☐ Fuel tank, refer to section 13.13.2
- ☐ Drive belts, refer to section 13.13.10
- ☐ Air compressor, refer to section 13.13.11
- ☐ Air system, refer to section 13.13.18
- ☐ Exhaust system, refer to section 13.13.19
- ☐ Engine (steam clean), refer to section 13.13.20
- ☐ Radiator and air-to-air charge cooler, refer to section 13.13.21
- ☐ Battery charging alternator, refer to section 13.13.23

Likewise, the following components must be replaced every 30,000 miles (48,000 km) or 12 months.

- ☐ Lubricating oil, refer to section 13.13.1
- ☐ Lubricating oil filter, refer to section 13.13.13
- ☐ Fuel filter, refer to section 13.13.14
- ☐ Coolant filter and inhibitor, refer to section 13.13.16

 Copyright © 2004 DETROIT DIESEL CORPORATION

13.5.4 45,000 Miles (72,000 km) or 18 Month Interval Maintenance

Every 45,000 miles (72,000 km) or 18 months, the following components must be inspected, serviced, corrected or replaced as necessary.

- ☐ Drive belts, refer to section 13.13.10
- ☐ Air compressor, refer to section 13.13.11
- ☐ Air system, refer to section 13.13.18
- ☐ Exhaust system, refer to section 13.13.19

Likewise, the following components must be replaced every 45,000 miles (72,000 km) or 18 months.

- ☐ Lubricating oil, refer to section 13.13.1
- ☐ Lubricating oil filter, refer to section 13.13.13
- ☐ Fuel filter, refer to section 13.13.14
- ☐ Coolant filter and inhibitor, refer to section 13.13.16

13.5.5 60,000 Miles (97,000 km) or 24 Month Interval Maintenance

Every 60,000 miles (97,000 km) or 24 months, the following components must be inspected, serviced, corrected or replaced as necessary.

- ☐ Fuel tank, refer to section 13.13.2
- ☐ Cooling system, refer to section 13.13.4
- ☐ Drive belts, refer to section 13.13.10
- ☐ Air compressor, refer to section 13.13.11
- ☐ Air system, refer to section 13.13.18
- ☐ Exhaust system, refer to section 13.13.19
- ☐ Engine (steam clean), refer to section 13.13.20
- ☐ Radiator and air-to-air charge cooler, refer to section 13.13.21
- ☐ Oil pressure, refer to section 13.13.22
- ☐ Engine tune-up, refer to section 13.13.31.
- ☐ Battery charging alternator, refer to section 13.13.23
- ☐ Engine and transmission mounts, refer to section 13.13.24
- ☐ Crankcase pressure, refer to section 13.13.25
- ☐ Thermostats and seals, refer to section 13.13.28
- ☐ Crankcase breather, refer to section 13.13.30

Likewise, the following components must be replaced every 60,000 miles (97,000 km) or 24 months.

- ☐ Lubricating oil, refer to section 13.13.1
- ☐ Lubricating oil filter, refer to section 13.13.13
- ☐ Fuel filter, refer to section 13.13.14
- ☐ Coolant filter and inhibitor, refer to section 13.13.16

(Rev. 2004) *All information subject to change without notice.*
6SE483 0401 Copyright © 2004 DETROIT DIESEL CORPORATION

13.5.6 75,000 Miles (121,000 km) or 30 Month Interval Maintenance

Every 75,000 miles (121,000 km) or 30 months, the following components must be inspected, serviced, corrected or replaced as necessary.

- ☐ Drive belts, refer to section 13.13.10
- ☐ Air compressor, refer to section 13.13.11
- ☐ Air system, refer to section 13.13.18
- ☐ Exhaust system, refer to section 13.13.19

Likewise, the following components must be replaced every 75,000 miles (121,000 km) or 30 months.

- ☐ Lubricating oil, refer to section 13.13.1
- ☐ Lubricating oil filter, refer to section 13.13.13
- ☐ Fuel filter, refer to section 13.13.14
- ☐ Coolant filter and inhibitor, refer to section 13.13.16

13.5.7 90,000 Miles (145,000 km) or 36 Month Interval Maintenance

Every 90,000 miles (145,000 km) or 36 months, the following components must be inspected, serviced, corrected or replaced as necessary.

- ☐ Fuel tank, refer to section 13.13.2
- ☐ Drive belts, refer to section 13.13.10
- ☐ Air compressor, refer to section 13.13.11
- ☐ Air system, refer to section 13.13.18
- ☐ Exhaust system, refer to section 13.13.19
- ☐ Engine (steam clean), refer to section 13.13.20
- ☐ Radiator and air-to-air charge cooler, refer to section 13.13.21
- ☐ Battery charging alternator, refer to section 13.13.23
- ☐ Alternator and attaching hardware, refer to section 13.13.40
- ☐ Air conditioning and attaching hardware, refer to section 13.13.41
- ☐ Air compressor and attaching hardware, refer to section 13.13.42

Likewise, the following components must be replaced every 90,000 miles (145,000 km) or 36 months.

- ☐ Lubricating oil, refer to section 13.13.1
- ☐ Lubricating oil filter, refer to section 13.13.13
- ☐ Fuel filter, refer to section 13.13.14
- ☐ Coolant filter and inhibitor, refer to section 13.13.16

 Copyright © 2004 DETROIT DIESEL CORPORATION

13.5.8 105,000 Miles (169,000 km) or 42 Month Interval Maintenance

Every 105,000 miles (169,000 km) or 42 months, the following components must be inspected, serviced, corrected or replaced as necessary.

- ☐ Drive belts, refer to section 13.13.10
- ☐ Air compressor, refer to section 13.13.11
- ☐ Air system, refer to section 13.13.18
- ☐ Exhaust system, refer to section 13.13.19

Likewise, the following components must be replaced every 105,000 miles (169,000 km) or 42 months.

- ☐ Lubricating oil, refer to section 13.13.1
- ☐ Lubricating oil filter, refer to section 13.13.13
- ☐ Fuel filter, refer to section 13.13.14
- ☐ Coolant filter and inhibitor, refer to section 13.13.16

13.5.9 120,000 Miles (193,000 km) or 48 Month Interval Maintenance

Every 120,000 miles (193,000 km) or 48 months, the following components must be inspected, serviced, corrected or replaced as necessary.

- ☐ Fuel tank, refer to section 13.13.2
- ☐ Cooling system, refer to section 13.13.4
- ☐ Air compressor, refer to section 13.13.11
- ☐ Air system, refer to section 13.13.18
- ☐ Exhaust system, refer to section 13.13.19
- ☐ Engine (steam clean), refer to section 13.13.20
- ☐ Radiator and air-to-air charge cooler, refer to section 13.13.21
- ☐ Oil pressure, refer to section 13.13.22
- ☐ Battery charging alternator, refer to section 13.13.23
- ☐ Engine and transmission mounts, refer to section 13.13.24
- ☐ Crankcase pressure, refer to section 13.13.25
- ☐ Fan Hub, refer to section 13.13.27
- ☐ Thermostats and seals, refer to section 13.13.28
- ☐ Crankcase breather, refer to section 13.13.30
- ☐ Engine Tune-up, refer to section 13.13.31

Likewise, the following components must be replaced every 120,000 miles (193,000 km) or 48 months.

- ☐ Drive belts, refer to section 13.13.10
- ☐ Lubricating oil, refer to section 13.13.1
- ☐ Lubricating oil filter, refer to section 13.13.13
- ☐ Fuel filter, refer to section 13.13.14
- ☐ Coolant filter and inhibitor, refer to section 13.13.16

(Rev. 2004) *All information subject to change without notice.*
6SE483 0401 Copyright © 2004 DETROIT DIESEL CORPORATION

13.5.10 135,000 Miles (217,000 km) or 54 Month Interval Maintenance

Every 135,000 miles (217,000 km) or 54 months, the following components must be inspected, serviced, corrected or replaced as necessary.

- ☐ Drive belts, refer to section 13.13.10
- ☐ Air compressor, refer to section 13.13.11
- ☐ Air system, refer to section 13.13.18
- ☐ Exhaust system, refer to section 13.13.19

Likewise, the following components must be replaced every 135,000 miles (217,000 km) or 54 months.

- ☐ Lubricating oil, refer to section 13.13.1
- ☐ Lubricating oil filter, refer to section 13.13.13
- ☐ Fuel filter, refer to section 13.13.14
- ☐ Coolant filter and inhibitor, refer to section 13.13.16

13.5.11 150,000 Miles (241,000 km) or 60 Month Interval Maintenance

Every 150,000 miles (241,000 km) or 60 months, the following components must be inspected, serviced, corrected or replaced as necessary.

- ☐ Fuel tank, refer to section 13.13.2
- ☐ Drive belts, refer to section 13.13.10
- ☐ Air compressor, refer to section 13.13.11
- ☐ Air system, refer to section 13.13.18
- ☐ Exhaust system, refer to section 13.13.19
- ☐ Engine (steam clean), refer to section 13.13.20
- ☐ Radiator and air-to-air charge cooler, refer to section 13.13.21
- ☐ Battery charging alternator, refer to section 13.13.23

Likewise, the following components must be replaced every 150,000 miles (241,000 km) or 60 months.

- ☐ Lubricating oil, refer to section 13.13.1
- ☐ Lubricating oil filter, refer to section 13.13.13
- ☐ Fuel filter, refer to section 13.13.14
- ☐ Coolant filter and inhibitor, refer to section 13.13.16

13.5.12 200,00 Miles (321,000 km) or 4000 Hours Interval Maintenance

Every 200,000 miles (321,000 km) or 4000 hours, the following component must be replaced:

- ☐ Rocker cover-mounted breather assembly and seal for closed crankcase breather system, refer to section13.13.30.

 Copyright © 2004 DETROIT DIESEL CORPORATION

13.6 MAINTENANCE OF ENGINES USED IN STATIONARY AND INDUSTRIAL APPLICATIONS

Diesel engine components used in stationary and industrial applications must be maintained at various intervals.

13.6.1 100 Hours (3,000 Miles - 4,800 km) Maintenance

Every 100 hours (3,000 miles - 4,800 km), the following components must be inspected, serviced, corrected or replaced as necessary.

- ☐ Battery, refer to section 13.13.9
- ☐ Drive belts, refer to section 13.13.10

13.6.2 150 Hours (4,500 Miles - 7,200 km) Maintenance

Every 150 hours (4,500 miles - 7,200 km), the following components must be inspected, serviced, corrected or replaced as necessary.

- ☐ Air compressor, refer to section 13.13.11
- ☐ Air cleaner, refer to section 13.13.12

Likewise, the following components must be replaced every 150 hours (4,500 miles - 7,200 km).

- ☐ Lubricating oil, refer to section 13.13.1
- ☐ Lubricating oil filter, refer to section 13.13.13
- ☐ Fuel filter, refer to section 13.13.14
- ☐ Coolant filter and inhibitor, refer to section 13.13.16

13.6.3 300 Hours (9,000 Miles - 14,500 km) Maintenance

Every 300 hours (9,000 miles - 14,500 km), the following components must be inspected, serviced, corrected or replaced as necessary.

- ☐ Fuel tank, refer to section 13.13.2
- ☐ Air compressor, refer to section 13.13.11
- ☐ Air system, refer to section 13.13.18
- ☐ Exhaust system, refer to section 13.13.19
- ☐ Engine (steam clean), refer to section 13.13.20
- ☐ Radiator and air-to-air charge cooler, refer to section 13.13.21
- ☐ Battery charging alternator, refer to section 13.13.23

Likewise, the following components must be replaced every 300 hours (9,000 miles - 14,500 km).

- ☐ Lubricating oil, refer to section 13.13.1
- ☐ Lubricating oil filter, refer to section 13.13.13
- ☐ Fuel filter, refer to section 13.13.14
- ☐ Coolant filter and inhibitor, refer to section 13.13.16

(Rev. 2004) *All information subject to change without notice.*
6SE483 0401 Copyright © 2004 DETROIT DIESEL CORPORATION

13.6.4 450 Hours (13,500 Miles - 21,700 km) Maintenance

Every 450 hours (13,500 miles - 21,700 km), the following components must be inspected, serviced, corrected or replaced as necessary.

- ☐ Air compressor, refer to section 13.13.11
- ☐ Air system, refer to section 13.13.18
- ☐ Exhaust system, refer to section 13.13.19

Likewise, the following components must be replaced every 450 hours (13,500 miles - 21,700 km).

- ☐ Lubricating oil, refer to section 13.13.1
- ☐ Lubricating oil filter, refer to section 13.13.13
- ☐ Fuel filter, refer to section 13.13.14
- ☐ Coolant filter and inhibitor, refer to section 13.13.16

13.6.5 600 Hours (18,000 Miles - 29,000 km) Maintenance

Every 600 hours (18,000 miles - 29,000 km), the following components must be inspected, serviced, corrected or replaced as necessary.

- ☐ Fuel tank, refer to section 13.13.2
- ☐ Air compressor, refer to section 13.13.11
- ☐ Air system, refer to section 13.13.18
- ☐ Exhaust system, refer to section 13.13.19
- ☐ Engine (steam clean), refer to section 13.13.20
- ☐ Radiator and air-to-air charge cooler, refer to section 13.13.21
- ☐ Oil pressure, refer to section 13.13.22
- ☐ Battery charging alternator, refer to section 13.13.23
- ☐ Engine and transmission mounts, refer to section 13.13.24
- ☐ Crankcase pressure, refer to section 13.13.25
- ☐ Thermostats and seals, refer to section 13.13.28
- ☐ Crankcase breather, refer to section 13.13.30

Likewise, the following components must be replaced every 600 hours (18,000 miles - 29,000 km).

- ☐ Lubricating oil, refer to section 13.13.1
- ☐ Lubricating oil filter, refer to section 13.13.13
- ☐ Fuel filter, refer to section 13.13.14
- ☐ Coolant filter and inhibitor, refer to section 13.13.16

13.6.6 750 Hours (22,500 Miles - 36,000 km) Maintenance

Every 750 hours (22,500 miles - 36,000 km), the following components must be inspected, serviced, corrected or replaced as necessary.

- ☐ Cooling system, refer to section 13.13.4
- ☐ Air compressor, refer to section 13.13.11

 Copyright © 2004 DETROIT DIESEL CORPORATION

- ☐ Air system, refer to section 13.13.18
- ☐ Exhaust system, refer to section 13.13.19

Likewise, the following components must be replaced every 750 hours (22,500 miles - 36,000 km).

- ☐ Lubricating oil, refer to section 13.13.1
- ☐ Lubricating oil filter, refer to section 13.13.13
- ☐ Fuel filter, refer to section 13.13.14
- ☐ Coolant filter and inhibitor, refer to section 13.13.16

13.6.7 900 Hours (27,000 Miles - 43,500 km) Maintenance

Every 900 hours (27,000 miles - 43,500 km), the following components must be inspected, serviced, corrected or replaced as necessary.

- ☐ Fuel tank, refer to section 13.13.2
- ☐ Air compressor, refer to section 13.13.11
- ☐ Air system, refer to section 13.13.18
- ☐ Exhaust system, refer to section 13.13.19
- ☐ Engine (steam clean), refer to section 13.13.20
- ☐ Radiator and air-to-air charge cooler, refer to section 13.13.21
- ☐ Battery charging alternator, refer to section 13.13.23
- ☐ Alternator and attaching hardware, refer to section 13.13.40
- ☐ Air conditioning and attaching hardward, refer to section 13.13.41
- ☐ Air compressor and attaching hardward, refer to section 13.13.42

Likewise, the following components must be replaced every 900 hours (27,000 miles - 43,500 km).

- ☐ Lubricating oil, refer to section 13.13.1
- ☐ Lubricating oil filter, refer to section 13.13.13
- ☐ Fuel filter, refer to section 13.13.14
- ☐ Coolant filter and inhibitor, refer to section 13.13.16

13.6.8 1,050 Hours (31,500 Miles - 50,700 km) Maintenance

Every 1,050 hours (31,500 miles - 50,700 km), the following components must be inspected, serviced, corrected or replaced as necessary.

- ☐ Air compressor, refer to section 13.13.11
- ☐ Air system, refer to section 13.13.18
- ☐ Exhaust system, refer to section 13.13.19
- ☐ Fan Hub, refer to section 13.13.27

Likewise, the following components must be replaced every 1,050 hours (31,500 miles - 50,700 km).

- ☐ Lubricating oil, refer to section 13.13.1
- ☐ Lubricating oil filter, refer to section 13.13.13
- ☐ Fuel filter, refer to section 13.13.14

(Rev. 2004) *All information subject to change without notice.*
6SE483 0401 Copyright © 2004 DETROIT DIESEL CORPORATION

- ☐ Coolant filter and inhibitor, refer to section 13.13.16

 Copyright © 2004 DETROIT DIESEL CORPORATION

13.6.9 1,200 Hours (36,000 Miles - 58,000 km) Maintenance

Every 1,200 hours (36,000 miles - 58,000 km), the following components must be inspected, serviced, corrected or replaced as necessary.

- ☐ Fuel tank, refer to section 13.13.2
- ☐ Air compressor, refer to section 13.13.11
- ☐ Air system, refer to section 13.13.18
- ☐ Exhaust system, refer to section 13.13.19
- ☐ Engine (steam clean), refer to section 13.13.20
- ☐ Radiator and air-to-air charge cooler, refer to section 13.13.21
- ☐ Oil pressure, refer to section 13.13.22
- ☐ Battery charging alternator, refer to section 13.13.23
- ☐ Engine and transmission mounts, refer to section 13.13.24
- ☐ Crankcase pressure, refer to section 13.13.25
- ☐ Thermostats and seals, refer to section 13.13.28
- ☐ Crankcase breather, refer to section 13.13.30

Likewise, the following components must be replaced every 1,200 hours (36,000 miles - 58,000 km).

- ☐ Lubricating oil, refer to section 13.13.1.
- ☐ Lubricating oil filter, refer to section 13.13.13
- ☐ Fuel filter, refer to section 13.13.14
- ☐ Coolant filter and inhibitor, refer to section 13.13.16

13.6.10 1,350 Hours (40,500 Miles - 65,000 km) Maintenance

Every 1,350 hours (40,500 miles - 65,000 km), the following components must be inspected, serviced, corrected or replaced as necessary.

- ☐ Air compressor, refer to section 13.13.11
- ☐ Air system, refer to section 13.13.18
- ☐ Exhaust system, refer to section 13.13.19

Likewise, the following components must be replaced every 1,350 hours (40,500 miles - 65,000 km).

- ☐ Lubricating oil, refer to section 13.13.1
- ☐ Lubricating oil filter, refer to section 13.13.13
- ☐ Fuel filter, refer to section 13.13.14
- ☐ Coolant filter and inhibitor, refer to section 13.13.16

(Rev. 2004) *All information subject to change without notice.*
6SE483 0401 Copyright © 2004 DETROIT DIESEL CORPORATION

13.6.11 1,500 Hours (45,000 Miles - 72,000 km) Maintenance

Every 1,500 hours (45,000 miles - 72,000 km), the following components must be inspected, serviced, corrected or replaced as necessary.

- ☐ Fuel tank, refer to section 13.13.2
- ☐ Cooling system, refer to section 13.13.4
- ☐ Air compressor, refer to section 13.13.11
- ☐ Air system, refer to section 13.13.18
- ☐ Exhaust system, refer to section 13.13.19
- ☐ Engine (steam clean), refer to section 13.13.20
- ☐ Radiator and air-to-air charge cooler, refer to section 13.13.21
- ☐ Battery charging alternator, refer to section 13.13.23
- ☐ Engine tune-up, refer to section 13.13.31

Likewise, the following components must be replaced every 1500 hours (45,000 miles - 72,000 km).

- ☐ Lubricating oil, refer to section 13.13.1
- ☐ Lubricating oil filter, refer to section 13.13.13
- ☐ Fuel filter, refer to section 13.13.14
- ☐ Coolant filter and inhibitor, refer to section 13.13.16

13.6.12 4000 Hours

Every 4000 operating hours, the following component must be replaced:

- ☐ Rocker cover-mounted breather assembly and seal for closed crankcase breather system, refer to section13.13.30.

 Copyright © 2004 DETROIT DIESEL CORPORATION

13.7 MAINTENANCE OF SERIES 60 DIESEL ENGINES FOR GENERATOR SET

Series 60 diesel genset components must be maintained at various intervals.

13.7.1 Daily Maintenance for Prime Diesel Genset

The following Prime genset components must be inspected daily: (Replace every 250 hours or three months, whichever comes first.)

NOTE:
Cranking motor, follow OEM recommendations.

- ☐ Battery, refer to section 13.13.9
- ☐ Drive belts, refer to section 13.13.10
- ☐ Lubricating oil, refer to section 13.13.1
- ☐ Fuel tank, refer to section 13.13.2
- ☐ Cooling system, refer to section 13.13.4
- ☐ Air cleaner, refer to section 13.13.12
- ☐ Air system, refer to section 13.13.18
- ☐ Fuel filter, refer to section 13.13.14
- ☐ Exhaust system, refer to section 13.13.19
- ☐ Oil pressure, refer to 11.5

13.7.2 Monthly Maintenance for Standby Diesel Genset

The following Standby genset components must be inspected monthly: (Replace every 150 hours or one year, whichever comes first.)

- ☐ Battery, refer to section 13.13.9
- ☐ Lubricating oil, refer to section 13.13.1
- ☐ Fuel tank, refer to section 13.13.2
- ☐ Cooling system, refer to section 13.13.4
- ☐ Air cleaner, refer to section 13.13.12
- ☐ Air system, refer to section 13.13.18
- ☐ Fuel filter, refer to section 13.13.14
- ☐ Oil pressure, refer to 11.5

Perform maintenance of lubricating oil, cooling system, fuel filters, water separator, and oil pressure at the time of Load Test. Load Test should be at least 35% of the unit's full rated output. Refer to generator set manufacturer's instructions.

(Rev. 2004) *All information subject to change without notice.*
6SE483 0401 Copyright © 2004 DETROIT DIESEL CORPORATION

13.7.3 150 hrs (or 2 months) Interval Maintenance for Genset

Every 150 hrs (or 2 months) the following components must be inspected:

- ☐ Battery, refer to section 13.13.9
- ☐ Drive belts, refer to section 13.13.10
- ☐ Air cleaner, refer to section 13.13.12
- ☐ Air system, refer to section 13.13.18
- ☐ Tachometer Drive, refer to section 8.5.3.1

13.7.4 300 hrs (or 4 months) Interval Maintenance for Genset

Every300 hrs (or 4 months) the following components must be inspected:

- ☐ Radiator and air-to-air charge cooler, refer to section 13.13.21

13.7.5 600 hrs (or 8 months) Interval Maintenance for Genset

Every 600 hrs (or 83 months) the following components must be inspected:

- ☐ Fuel tank, refer to section 13.13.2
- ☐ Fuel filter, refer to section 13.13.14
- ☐ Exhaust system, refer to section 13.13.19
- ☐ Battery charging alternator, refer to section 13.13.23
- ☐ Fuel lines and flexible hoses, refer to section 13.13.3
- ☐ Engine and transmission mounts, refer to section 13.13.24
- ☐ Crankcase pressure, refer to section 13.13.25
- ☐ Oil pressure, refer to section 11.5
- ☐ Alternator and attaching hardware, refer to section 13.13.40

13.7.6 1000 hrs (or 13 months) Interval Maintenance for Genset

Every 1000 hrs (or 13 months) the following components must be inspected:

- ☐ Crankcase breather, refer to section 13.13.30
- ☐ Fan Hub, refer to section 13.13.27

13.7.7 1500 hrs (or 20 months) Interval Maintenance for Genset

Every 1500 hrs (or 20 months) the following components must be inspected:

- ☐ Engine tune-up, refer to section 13.13.31

 Copyright © 2004 DETROIT DIESEL CORPORATION

13.7.8 2000 hrs (or 26 months) Interval Maintenance for Genset

Every 2000 hrs (or 26 months) the following components must be replaced:

- ☐ Fuel lines and flexible hoses, refer to section 13.13.3

Every 2000 hrs (or 26 months) the following components must be inspected:

- ☐ Engine (steam clean), refer to section 13.13.20

13.7.9 3000 hrs (or 39 months) Interval Maintenance for Genset

Every 3000 hrs (or 39 months) the following components must be inspected:

- ☐ Water pump, refer to section 13.13.5.

13.7.10 4000 hrs (or 52 months) Interval Maintenance for Genset

Every 4000 hrs (or 52 months) the following components must be replaced:

- ☐ Cooling system, refer to section 13.13.4
- ☐ Crankcase breather, refer to section 13.13.30
- ☐ Thermostats and seals, refer to section 13.13.28

(Rev. 2004) *All information subject to change without notice.*
6SE483 0401 Copyright © 2004 DETROIT DIESEL CORPORATION

13.8 MAINTENANCE OF SERIES 60G ENGINES FOR GENERATOR SET

60G genset components must be maintained at various intervals.

13.8.1 Daily Maintenance for Genset

The following components must be maintained daily:

- ☐ Lubricating oil, refer to 11.5
- ☐ Oil pressure, refer to 11.5
- ☐ Turbocharger, refer to 13.13.8
- ☐ Drive belts, refer to 13.13.10
- ☐ Fuel lines and hoses, refer to 13.13.3
- ☐ Intake system from air cleaner to intake manifold, refer to 13.13.29

13.8.2 250 hrs (or 3 months) Interval Maintenance for Genset

Every 250 hrs (or 3 months) the following components must be replaced:

- ☐ Lubricating oil, refer to 11.5
- ☐ Lube oil filter, refer to 13.13.13

Every 250 hrs (or 3 months), the following components must be maintained:

- ☐ Crankcase breather, refer to 13.13.30
- ☐ Drive belts, refer to 13.13.10
- ☐ Air cleaner, refer to 13.13.12
- ☐ Battery, refer to 13.13.9

13.8.3 500 hrs (or 6 months) Interval Maintenance for Genset

Every 500 hrs (or 6 months), the following components must be maintained:

- ☐ Crankcase pressure, refer to 13.13.25
- ☐ Coolant filter/inhibitor, refer to 13.13.16
- ☐ Charge air cooler, refer to 6.10
- ☐ Fan hub, refer to 13.13.27

 Copyright © 2004 DETROIT DIESEL CORPORATION

13.8.4 1,000 hrs (or 12 months) Interval Maintenance for Genset

Every 1,000 hrs (or 12 months) the following components must be replaced:

- ☐ Air cleaner, refer to section 13.13.12

Every 1,000 hrs (or 12 months), the following components must be maintained:

- ☐ Thermostat, refer to section 13.13.28
- ☐ PSV valve, refer to section 2.45
- ☐ Fuel lines and hoses, refer to section 13.13.3
- ☐ Battery charging alternator, refer to section 13.13.23
- ☐ Engine and generator mounts, refer to section 13.13.24
- ☐ Radiator, refer to section 13.13.21
- ☐ Exhaust system, refer to section 13.13.19
- ☐ Alternator and attaching hardware, refer to section 13.13.40

13.8.5 1,500 hrs (or 12 months) Interval Maintenance for Genset

Every 1,500 hrs (or 12 months) the following components must be replaced:

- ☐ Spark plugs, refer to 15.7

Every 1,500 hrs (or 12 months) the following components must be maintained:

- ☐ Spark plug boots; inspect, refer to 13.8.3
- ☐ Valve lash; inspect/adjust, refer to 12.4

13.8.6 3,800 hrs (or 24 months) Interval Maintenance for Genset

Every 3,800 hrs (or 24 months) the following must be replaced:

- ☐ Coolant, refer to 13.13.4

Every 3,800 hrs (or 24 months), the following components must be maintained:

- ☐ Fuel mixer, refer to 2.49
- ☐ Vibration damper, refer to 1.12

(Rev. 2004) *All information subject to change without notice.*
6SE483 0401 Copyright © 2004 DETROIT DIESEL CORPORATION

13.9 LUBRICATING OIL AND FILTER CHANGE INTERVALS FOR GENSET

The following must be maintained at various intervals.

13.9.1 250 hrs (or 12 months) Interval Maintenance (Standby Duty)

Every 250 hrs (or 12 months), the following must be replaced for an engine on standby:

- ☐ Lubricating oil, refer to section 11.5

13.9.2 250 hrs (or 3 months) Continuous Duty Interval Maintenance (Continuous/Prime Duty)

Every 250 hrs (or 3 months), the following must be replaced for a continuous/prime running engine:

- ☐ Lubricating oil, refer to section 11.5

 Copyright © 2004 DETROIT DIESEL CORPORATION

13.10 PREVENTIVE MAINTENANCE FOR THE SERIES 60G AUTOMOTIVE ENGINE (CITY TRANSIT COACH)

The following is a list of items that are unique to the Series 60G engine for preventive maintenance (city transit coach):

13.10.1 Coalescing Fuel Filters

Drain coalescing fuel filters daily. Inspect natural gas fuel filter every 6,000 miles (9,600 km). Replace fuel filter if dirt, debris or foreign objects are present “inside” of the fuel filter. Also, replace if fuel filter seal is damaged.

NOTE:
Oil saturation on the outside of the fuel filter is a NORMAL condition of the oil coalescing process.

13.10.2 Valve Lash

Check valve lash. Valve lash should be inspected and adjusted every 36,000 miles (58,000 km) as specified.

13.10.3 Closed Crankcase Breather System

The closed crankcase breather filter must be replaced every 6000 miles (9,600 km). The filter is located in the remote mounted crank vent assembly.

(Rev. 2004) *All information subject to change without notice.*
6SE483 0401 Copyright © 2004 DETROIT DIESEL CORPORATION

13.10.4 Dry-Type Air Cleaner

Under no operating condition should the intake restriction exceed 20 inches of water at full load and rated speed. A clogged air cleaner element will cause excessive intake restriction and a reduced air supply to the engine. For equivalent restriction limits for lower speed, refer to Detroit Diesel Corporation Engineering Bulletin No. 39, "Air Cleaner Systems for Detroit Diesel Engines".

Inspect the air cleaner element every 12,000 miles (19,000 km) for coaches. Inspect the air cleaner more often if the engine is operated under severe dust conditions. Replace the element if necessary. Check the gaskets for deterioration and replace, if necessary. If the dry-type air cleaner is equipped with an aspirator, check for aspirator damage or clogging. Clean and repair as necessary.

13.10.5 Engine Lubricating Oil

Change the lubricating oil every 6,000 miles (9,600 km) for city transit coaches. (Refer to Engine Requirements - Lubricating Oil, Fuel and Filters - 7SE272).

13.10.6 Engine Lubricating Oil Filters

Change the lubricating oil filters at each oil change 6,000 miles (9,600 km) for city transit coaches).

13.10.7 Coolant

Check the coolant level daily before starting the engine. Ensure coolant is up to the proper level. Add coolant as necessary. DO NOT OVERFILL. Check all cooling system lines and hoses for damage, leaks or loose connections. Tighten or replace as necessary. (Refer to Coolant Selections for Detroit Diesel Engines 7SE298). Check for proper inhibitor level at each oil change (15,000 miles or 24,000 km) and add as required; or 6,000 miles (9,600 km) for coaches.

13.10.8 Turbocharger and Wastegate Assembly

Inspect turbocharger mountings, air intake and exhaust ducts, recirculation valve assembly, and wastegate valve assembly, including hoses, for leaks. Check the oil and water inlet and outlet lines and connections for leaks and restrictions to flow. Check for unusual vibrations or noises. If excessive, remove unit from service and have cause corrected.

 Copyright © 2004 DETROIT DIESEL CORPORATION

13.10.9 Thermostat

Check thermostats and seals every 108,000 miles (173,800 km) for coach. Replace the seals and/or thermostat, if necessary.

13.10.10 Spark Plugs

Replace the spark plugs and boot spring assembly every 24,000 miles (38,600 km) for coach; see service manual for plug information, refer to section 15.7and refer to section 15.3.

(Rev. 2004) *All information subject to change without notice.*
6SE483 0401 Copyright © 2004 DETROIT DIESEL CORPORATION

13.11 MAINTENANCE OF SERIES 60G AUTOMOTIVE ENGINES

Series 60G transit coach components must be maintained at various intervals.

13.11.1 6,000 Miles (10,000 km) Interval Maintenance for Transit Coach

Every 6,000 miles (10,000 km), the following components must be maintained:

- ☐ Primary and secondary coalescing filters and seals, refer to section 13.10.1.
- ☐ Engine lubricating oil, refer to section 13.10.5.
- ☐ Engine lubricating oil filter, refer to section 13.10.6.
- ☐ Turbocharger and wastegate assembly hoses, refer to section 13.10.8.
- ☐ Crank vent breather filter replaced, refer to section 13.10.3.

13.11.2 12,000 Miles (19,000 km) Interval Maintenance for Transit Coach

Every 12,000 miles (19,000 km), the following components must be maintained:

- ☐ Primary and secondary coalescing filters and seals, refer to section 13.10.1.
- ☐ Engine lubricating oil, refer to section 13.10.5.
- ☐ Engine lubricating oil filter, refer to section 13.10.6.
- ☐ Turbocharger and wastegate assembly hoses, refer to section 13.10.8.
- ☐ Dry-type air cleaner, refer to section 13.10.4.
- ☐ Coolant, refer to section 13.10.7.
- ☐ Crank vent breather filter replaced, refer to section 13.10.3.

13.11.3 18,000 Miles (29,000 km) Interval Maintenance for Transit Coach

Every 18,000 miles (29,000 km), the following components must be maintained:

- ☐ Primary and secondary coalescing filters and seals, refer to section 13.10.1.
- ☐ Engine lubricating oil, refer to section 13.10.5.
- ☐ Engine lubricating oil filter, refer to section 13.10.6.
- ☐ Turbocharger and wastegate assembly hoses, refer to section 13.10.8.
- ☐ Crank vent breather filter replaced, refer to section 13.10.3.

13.11.4 24,000 Miles (39,000 km) Interval Maintenance for Transit Coach

Every 24,000 miles (39,000 km), the following components must be maintained:

- ☐ Primary and secondary coalescing filters and seals, refer to section 13.10.1.
- ☐ Engine lubricating oil, refer to section 13.10.5.
- ☐ Engine lubricating oil filter, refer to section 13.10.6.
- ☐ Turbocharger and wastegate assembly hoses, refer to section 13.10.8.
- ☐ Dry-type air cleaner, refer to section 13.10.4.
- ☐ Coolant, refer to section 13.10.7.
- ☐ Crank vent breather filter replaced, refer to section 13.10.3.
- ☐ Change spark plugs, inspect spring and boot assembly, refer to section 15.7.

 Copyright © 2004 DETROIT DIESEL CORPORATION

13.11.5 30,000 Miles (48,000 km) Interval Maintenance for Transit Coach

Every 30,000 miles (48,000 km), the following components must be maintained:

- ☐ Primary and secondary coalescing filters and seals, refer to section 13.10.1.
- ☐ Engine lubricating oil, refer to section 13.10.5.
- ☐ Engine lubricating oil filter, refer to section 13.10.6.
- ☐ Turbocharger and wastegate assembly hoses, refer to section 13.10.8.
- ☐ Crank vent breather filter replaced, refer to section 13.10.3.

13.11.6 36,000 Miles (58,000 km) Interval Maintenance for Transit Coach

Every 36,000 miles (58,000 km), the following components must be maintained:

- ☐ Primary and secondary coalescing filters and seals, refer to section 13.10.1.
- ☐ Engine lubricating oil, refer to section 13.10.5.
- ☐ Engine lubricating oil filter, refer to section 13.10.6.
- ☐ Turbocharger and wastegate assembly hoses, refer to section 13.10.8.
- ☐ Dry-type air cleaner, refer to section 13.10.4.
- ☐ Coolant, refer to section 13.10.7.
- ☐ Crank vent breather filter replaced, refer to section 13.10.3.
- ☐ Valve lash, refer to section 13.10.2.

13.11.7 42,000 Miles (68,000 km) Interval Maintenance for Transit Coach

Every 42,000 miles (68,000 km), the following components must be maintained:

- ☐ Primary and secondary coalescing filters and seals, refer to section 13.10.1.
- ☐ Engine lubricating oil, refer to section 13.10.5.
- ☐ Engine lubricating oil filter, refer to section 13.10.6.
- ☐ Turbocharger and wastegate assembly hoses, refer to section 13.10.8.
- ☐ Crank vent breather filter replaced, refer to section 13.10.3.

13.11.8 48,000 Miles (77,000 km) Interval Maintenance for Transit Coach

Every 48,000 miles (77,000 km), the following components must be maintained:

- ☐ Primary and secondary coalescing filters and seals, refer to section 13.10.1.
- ☐ Engine lubricating oil, refer to section 13.10.5.
- ☐ Engine lubricating oil filter, refer to section 13.10.6.
- ☐ Turbocharger and wastegate assembly hoses, refer to section 13.10.8.
- ☐ Dry-type air cleaner, refer to section 13.10.4.
- ☐ Coolant, refer to section 13.10.7.
- ☐ Change spark plugs, inspect spring and boot assembly, refer to section 15.7.
- ☐ Crank vent breather filter replaced, refer to section 13.10.3.

(Rev. 2004) *All information subject to change without notice.*
6SE483 0401 Copyright © 2004 DETROIT DIESEL CORPORATION

13.11.9 54,000 Miles (87,000 km) Interval Maintenance for Transit Coach

Every 54,000 miles (87,000 km), the following components must be maintained:

- ☐ Primary and secondary coalescing filters and seals, refer to section 13.10.1.
- ☐ Engine lubricating oil, refer to section 13.10.5.
- ☐ Engine lubricating oil filter, refer to section 13.10.6.
- ☐ Turbocharger and wastegate assembly hoses, refer to section 13.10.8.
- ☐ Crank vent breather filter replaced, refer to section 13.10.3.

13.11.10 60,000 Miles (97,000 km) Interval Maintenance for Transit Coach

Every 60,000 miles (97,000 km), the following components must be maintained:

- ☐ Primary and secondary coalescing filters and seals, refer to section 13.10.1.
- ☐ Engine lubricating oil, refer to section 13.10.5.
- ☐ Engine lubricating oil filter, refer to section 13.10.6.
- ☐ Turbocharger and wastegate assembly hoses, refer to section 13.10.8.
- ☐ Dry-type air cleaner, refer to section 13.10.4.
- ☐ Coolant, refer to section 13.10.7.
- ☐ Crank vent breather filter replaced, refer to section 13.10.3.

13.11.11 66,000 Miles (106,000 km) Interval Maintenance for Transit Coach

Every 66,000 miles (106,000 km), the following components must be maintained:

- ☐ Primary and secondary coalescing filters and seals, refer to section 13.10.1.
- ☐ Engine lubricating oil, refer to section 13.10.5.
- ☐ Engine lubricating oil filter, refer to section 13.10.6.
- ☐ Turbocharger and wastegate assembly hoses, refer to section 13.10.8.
- ☐ Crank vent breather filter replaced, refer to section 13.10.3.

13.11.12 72,000 Miles (116,000 km) Interval Maintenance for Transit Coach

Every 72,000 miles (116,000 km), the following components must be maintained:

- ☐ Primary and secondary coalescing filters and seals, refer to section 13.10.1.
- ☐ Engine lubricating oil, refer to section 13.10.5.
- ☐ Engine lubricating oil filter, refer to section 13.10.6.
- ☐ Turbocharger and wastegate assembly hoses, refer to section 13.10.8.
- ☐ Valve lash, refer to section 13.10.2.
- ☐ Dry-type air cleaner, refer to section 13.10.4.
- ☐ Coolant, refer to section 13.10.7.
- ☐ Change spark plugs, inspect boot and spring assembly, refer to section 13.10.10.
- ☐ Crank vent breather filter replaced, refer to section 13.10.3.

 Copyright © 2004 DETROIT DIESEL CORPORATION

13.11.13 78,000 Miles (126,000 km) Interval Maintenance for Transit Coach

Every 78,000 miles (126,000 km), the following components must be maintained:

- ☐ Primary and secondary coalescing filters and seals, refer to section 13.10.1.
- ☐ Engine lubricating oil, refer to section 13.10.5.
- ☐ Engine lubricating oil filter, refer to section 13.10.6.
- ☐ Turbocharger and wastegate assembly hoses, refer to section 13.10.8.
- ☐ Crank vent breather filter replaced, refer to section 13.10.3.

13.11.14 84,000 Miles (135,000 km) Interval Maintenance for Transit Coach

Every 84,000 miles (135,000 km), the following components must be maintained:

- ☐ Primary and secondary coalescing filters and seals, refer to section 13.10.1.
- ☐ Engine lubricating oil, refer to section 13.10.5.
- ☐ Engine lubricating oil filter, refer to section 13.10.6.
- ☐ Turbocharger and wastegate assembly hoses, refer to section 13.10.8.
- ☐ Dry-type air cleaner, refer to section 13.10.4.
- ☐ Coolant, refer to section 13.10.7.
- ☐ Crank vent breather filter replaced, refer to section 13.10.3.

13.11.15 90,000 Miles (145,000 km) Interval Maintenance for Transit Coach

Every 90,000 miles (145,000 km), the following components must be maintained:

- ☐ Primary and secondary coalescing filters and seals, refer to section 13.10.1.
- ☐ Engine lubricating oil, refer to section 13.10.5.
- ☐ Engine lubricating oil filter, refer to section 13.10.6.
- ☐ Turbocharger and wastegate assembly hoses, refer to section 13.10.8.
- ☐ Crank vent breather filter replaced, refer to section 13.10.3.

13.11.16 96,000 Miles (154,000 km) Interval Maintenance for Transit Coach

Every 96,000 miles (154,000 km), the following components must be maintained:

- ☐ Primary and secondary coalescing filters and seals, refer to section 13.10.1.
- ☐ Engine lubricating oil, refer to section 13.10.5.
- ☐ Engine lubricating oil filter, refer to section 13.10.6.
- ☐ Turbocharger and wastegate assembly hoses, refer to section 13.10.8.
- ☐ Dry-type air cleaner, refer to section 13.10.4.
- ☐ Coolant, refer to section 13.10.7.
- ☐ Change spark plugs, inspect boot and spring assembly, refer to section 13.10.10.
- ☐ Crank vent breather filter replaced, refer to section 13.10.3.

(Rev. 2004) *All information subject to change without notice.*
6SE483 0401 Copyright © 2004 DETROIT DIESEL CORPORATION

13.11.17 102,000 Miles (164,000 km) Interval Maintenance for Transit Coach

Every 102,000 miles (164,000 km), the following components must be maintained:

- ☐ Primary and secondary coalescing filters and seals, refer to section 13.10.1.
- ☐ Engine lubricating oil, refer to section 13.10.5.
- ☐ Engine lubricating oil filter, refer to section 13.10.6.
- ☐ Turbocharger and wastegate assembly hoses, refer to section 13.10.8.
- ☐ Crank vent breather filter replaced, refer to section 13.10.3.

13.11.18 108,000 Miles (174,000 km) Interval Maintenance for Transit Coach

Every 108,000 miles (174,000 km), the following components must be maintained:

- ☐ Primary and secondary coalescing filters and seals, refer to section 13.10.1.
- ☐ Engine lubricating oil, refer to section 13.10.5.
- ☐ Engine lubricating oil filter, refer to section 13.10.6.
- ☐ Turbocharger and wastegate assembly hoses, refer to section 13.10.8.
- ☐ Valve lash, refer to section 13.10.2.
- ☐ Crankcase breather element, refer to section 13.10.3.
- ☐ Dry-type air cleaner, refer to section 13.10.4.
- ☐ Coolant, refer to section 13.10.7.
- ☐ Thermostat, refer to section 13.10.9.
- ☐ Crank vent breather filter replaced, refer to section 13.10.3.

13.11.19 114,000 Miles (183,000 km) Interval Maintenance for Transit Coach

Every 114,000 miles (183,000 km), the following components must be maintained:

- ☐ Primary and secondary coalescing filters and seals, refer to section 13.10.1.
- ☐ Engine lubricating oil, refer to section 13.10.5.
- ☐ Engine lubricating oil filter, refer to section 13.10.6.
- ☐ Turbocharger and wastegate assembly hoses, refer to section 13.10.8.
- ☐ Crank vent breather filter replaced, refer to section 13.10.3.

13.11.20 120,000 Miles (193,000 km) Interval Maintenance for Transit Coach

Every 120,000 miles (193,000 km), the following components must be maintained:

- ☐ Primary and secondary coalescing filters and seals, refer to section 13.10.1.
- ☐ Engine lubricating oil, refer to section 13.10.5.
- ☐ Engine lubricating oil filter, refer to section 13.10.6.
- ☐ Turbocharger and wastegate assembly hoses, refer to section 13.10.8.
- ☐ Dry-type air cleaner, refer to section 13.10.4.
- ☐ Coolant, refer to section 13.10.7.
- ☐ Change spark plugs, inspect boot and spring assembly, refer to section 13.10.10.
- ☐ Crank vent breather filter replaced, refer to section 13.10.3.

 Copyright © 2004 DETROIT DIESEL CORPORATION

13.11.21 4,000 Hours Interval Maintenance

Every 4000 operating hours, the following component must be replaced:

- ☐ Rocker cover-mounted breather assembly and seal ring for closed crankcase breather system, refer to section 13.13.30.

(Rev. 2004) *All information subject to change without notice.*
6SE483 0401 Copyright © 2004 DETROIT DIESEL CORPORATION

13.12 LUBRICATING OIL AND FILTER CHANGE INTERVALS FOR GENSET (WITH HIGH SULFUR FUELS)

The following must be maintained at various intervals.

NOTICE:
Operation with fuels having total sulfur greater than 32 ppm, on a mass basis, may result in engine damage, and is not recommended by Detroit Diesel Corporation.

13.12.1 150 hrs (or 3 months) Interval Maintenance (Standby Duty)

Every 150 hrs (or 3 months), the following must be replaced for a engine on standby:

Fuel with total sulfur greater than 24 ppm, but less than 32 ppm.

- ☐ Lubricating oil, refer to 11.5

13.12.2 150 hrs (or 3 months) Interval Maintenance (Continuous/Prime Duty)

Every 150 hrs (or 3 months), the following must be replaced for a engine on continuous/prime:

Fuel with total sulfur greater than 24 ppm, but less than 32 ppm.

- ☐ Lubricating oil, refer to 11.5

13.12.3 200 hrs (or 6 months) Interval Maintenance (Standby Duty)

Every 200 hrs (or 6 months), the following must be replaced for an engine on standby:

Fuel with total sulfur greater than 17 ppm, but less than 24 ppm.

- ☐ Lubricating oil, refer to 11.5

13.12.4 200 hrs (or 3 months) Interval Maintenance (Continuous/Prime Duty)

Every 200 hrs (or 3 months), the following must be replaced for a continuous/prime running engine:

Fuel with total sulfur greater than 17 ppm, but less than 24 ppm.

- ☐ Lubricating oil, refer to 11.5

 Copyright © 2004 DETROIT DIESEL CORPORATION

13.13 DESCRIPTION OF MAINTENANCE ITEMS

For locations of components and systems to be maintained, see Figure 13-1, see Figure 13-2and see Figure 13-3.

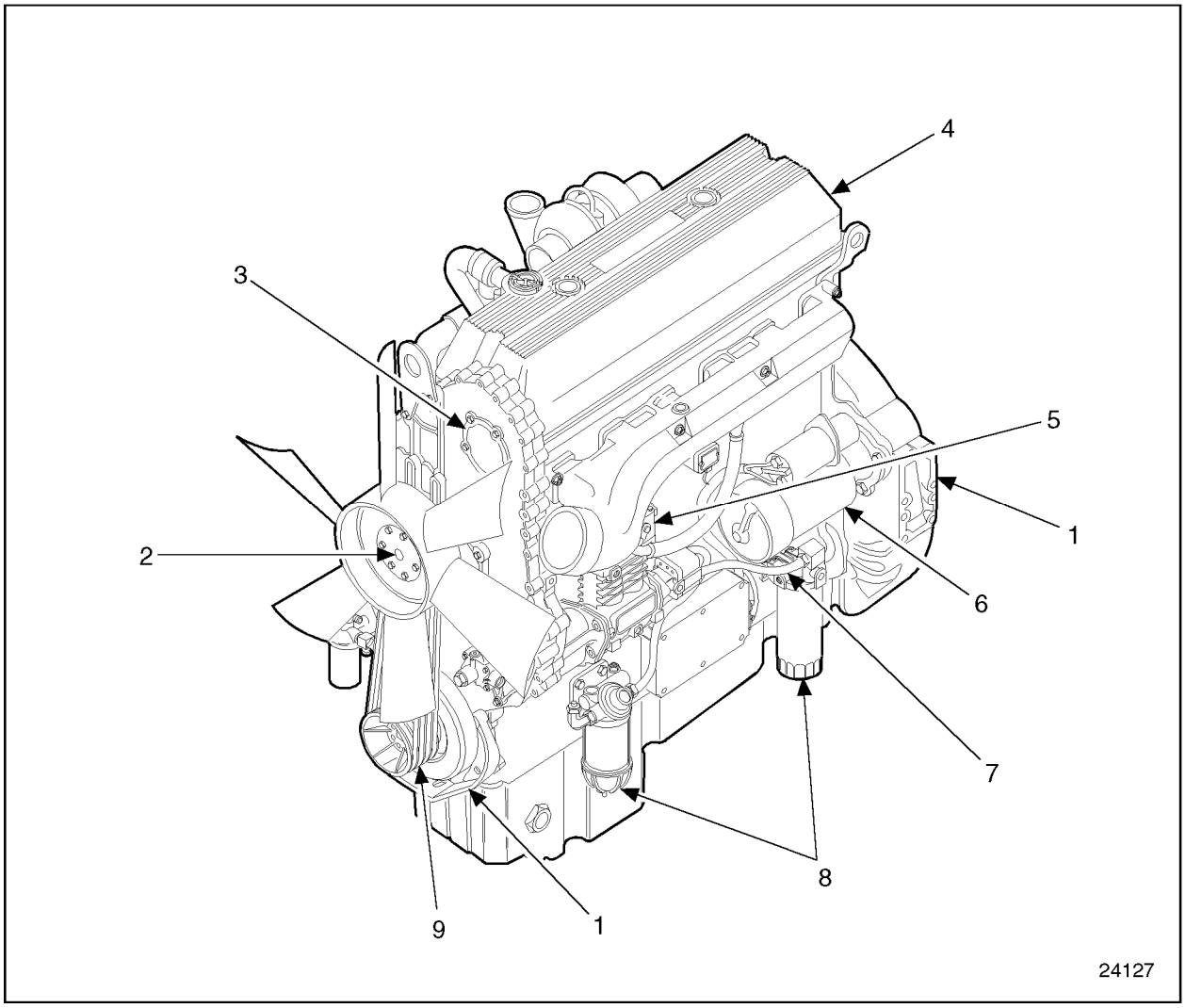

1. Engine Transmission Mounts
2. Fan Hub
3. Tachometer Drive
4. Rocker Cover
5. Air Compressor
6. Cranking Motor
7. Fuel Lines and Flexible Hoses
8. Fuel Filters
9. Drive Belts

Figure 13-1 Preventive Maintenance Service Items (Diesel)

(Rev. 2004) *All information subject to change without notice.*
6SE483 0401 Copyright © 2004 DETROIT DIESEL CORPORATION

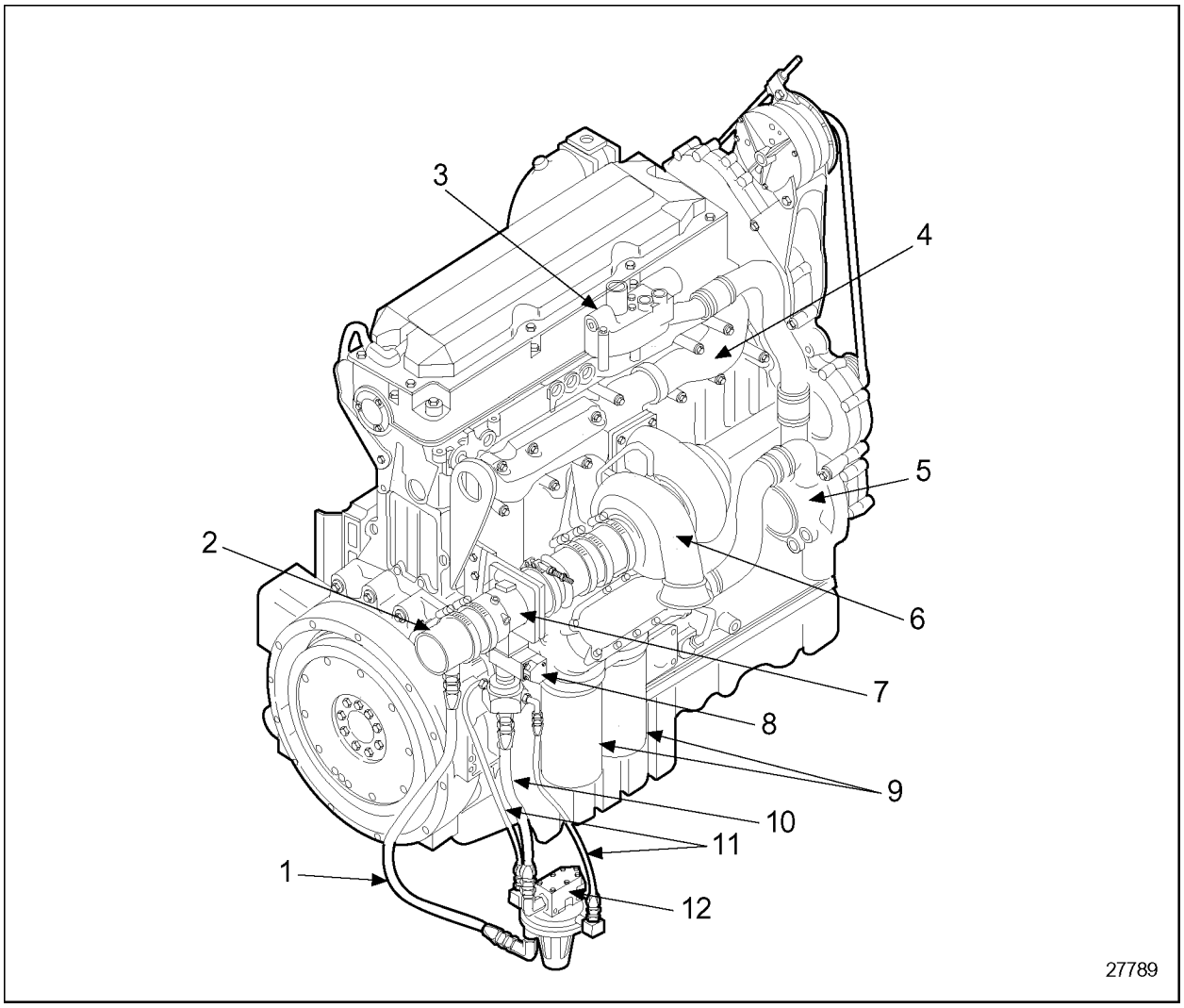

1. Air Balance Hose
2. Air Inlet Tube
3. Thermostat Housing
4. Exhaust Manifold
5. Fresh Water Pump
6. Turbocharger
7. Fuel Mixer Assembly
8. Pulse Width Modulated Stepper Motor Valve (PSV)
9. Lube Oil Filters
10. Fuel Supply Hose
11. Fuel Balance Hoses
12. Low Pressure Regulator

Figure 13-2 Preventive Maintenance Service Items (Natural Gas)

 Copyright © 2004 DETROIT DIESEL CORPORATION

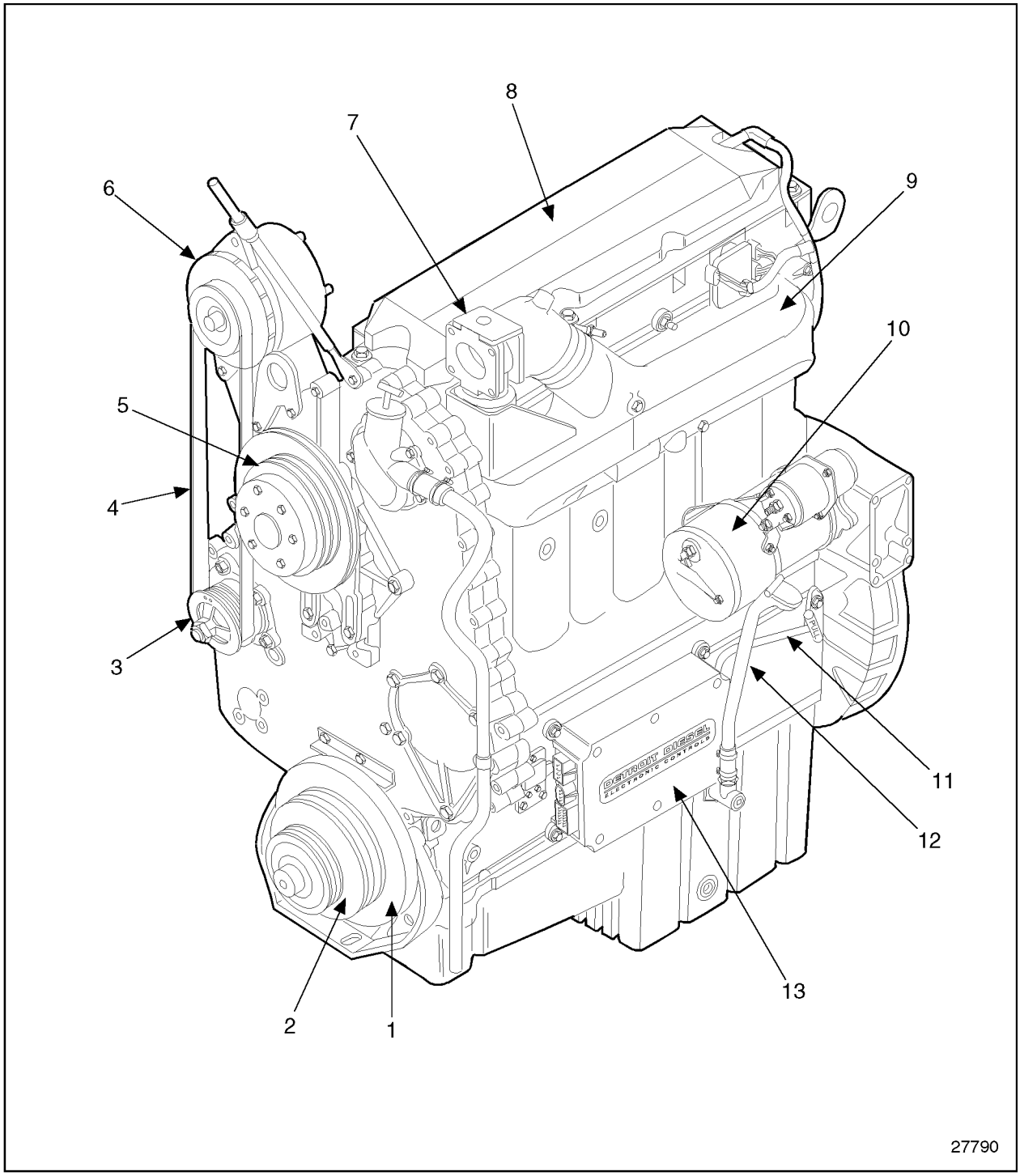

(Rev. 2004) *All information subject to change without notice.*
6SE483 0401 Copyright © 2004 DETROIT DIESEL CORPORATION

1. Vibration Damper
2. Crankshaft Pulley
3. Accessory Drive Assembly
4. Alternator Drive Belt
5. Fan Pulley
6. Alternator
7. Throttle
8. Rocker Cover
9. Intake Manifold
10. Electric Starting Motor
11. Dipstick
12. Oil Filler
13. Electronic Control Module (ECM)

Figure 13-3 Preventive Maintenance Service Items

 Copyright © 2004 DETROIT DIESEL CORPORATION

13.13.1 Lubricating Oil

Check the lubricating oil level with the engine stopped and the vehicle on level ground. If the engine has just been stopped and is warm, wait approximately ten minutes to allow the oil to drain back to the oil pan. Add the proper grade oil as recommended to maintain the correct oil level on the dipstick. Refer to section 5.2.1.

NOTE:
Do not overfill. Oil may be blown out through the crankcase breather if the crankcase is overfilled.

Make a visual check for oil leaks around the filters and the external oil lines.

Change the lubricating oil as follows:

1. Position the vehicle or equipment on level ground.
2. If the engine is cold, run it until it is warm.

NOTICE:
When removing or installing a side plug, hold the flats of the insert with a 2 1/8 in., or larger, open end adjustable wrench to keep it from turning. If the insert is loosened, it may be necessary to remove the oil pan and retighten the nut to prevent a possible oil leak.

3. Remove drain plug on the bottom of oil pan. Drain lube oil into a suitable container. *Always dispose of used lubricating oil in an environmentally responsible manner, according to state and/or federal (EPA) recommendations.*

NOTE:
If the lubricating oil is drained immediately after an engine has been run for some time, most of the sediment will be in suspension and will drain readily.

4. Coat drain plug(s) with Loctite® PT 7271 sealant (or equivalent). Install and torque to 45-56 N·m (33-41 lb·ft).

(Rev. 2004) *All information subject to change without notice.*
6SE483 0401 Copyright © 2004 DETROIT DIESEL CORPORATION

To replace the lube oil filters, perform the following procedure:

1. Remove the spin-on filter cartridges using J 29917, (or equivalent) and a 1/2 in. drive socket wrench and extension.
2. Dispose of the used oil and filters. *Always dispose of used oil and filters in an environmentally responsible manner, according to state and/or federal (EPA) recommendations.*
3. Clean the filter adaptor with a clean, lint-free cloth.
4. Lightly coat the filter gaskets (seals) with clean engine oil.
5. Start the new filters on the adaptor, and tighten by hand until the gaskets touch the mounting adaptor head.

NOTE:
Tighten full-flow filters an additional two-thirds turn by hand or refer to instructions on the replacement filter.

Add oil as required to bring the level to the FULL mark on the dipstick.

NOTE:
Engine oil capacity can vary, depending on the oil pan used and the engine application. For total oil capacity refer to the engine application manual or contact an authorized Detroit Diesel distributor.

CAUTION:

Diesel engine exhaust and some of its constituents are known to the State of California to cause cancer, birth defects, and other reproductive harm.

- ☐ **Always start and operate an engine in a well ventilated area.**
- ☐ **If operating an engine in an enclosed area, vent the exhaust to the outside.**
- ☐ **Do not modify or tamper with the exhaust system or emission control system.**

Start and run the engine for a short period, and check for leaks. After leaks have been corrected, stop the engine long enough for oil to drain back to the crankcase (approximately 20 minutes). Add oil as required to bring the level to the proper mark on the dipstick.

NOTE:
Do not overfill. Oil may be blown out through the crankcase breather if the crankcase is overfilled.

 Copyright © 2004 DETROIT DIESEL CORPORATION

13.13.2 Fuel Tanks

Keep the fuel tank(s) filled to reduce the condensation to a minimum. Select the proper grade of fuel. Refer to section 5.1for the fuel specifications that are **listed in Table** 5-1.

Open the drain at the bottom of the fuel tank every 30,000 miles - 48,000 km (300 hours for non-vehicle applications), to drain off any water and/or sediment.

Every 12 months or 60,000 miles - 96,000 km (600 hours for non-vehicle applications), whichever comes first, tighten all fuel tank mountings and brackets (refer to OEM maintenance guidelines). At the same time, check the seal in the fuel tank cap, the breather hole in the cap and the condition of the flexible fuel lines. Repair or replace the parts as necessary (refer to OEM maintenance guidelines).

The most common form of diesel fuel contamination is water. Water is harmful to the fuel system in itself, but it also promotes the growth of microbiological organizations (microbes). These microbes clog fuel filters with a "slime" and restrict fuel flow.

Condensation is particularly prevalent on units that stand idle for extended periods of time. Ambient temperature changes cause condensation in partially filled fuel tanks.

Units in storage are particularly susceptible to microbe growth. The microbes live in the fuel-water interface. They need both liquids to survive. These microbes find excellent growth conditions in the dark, quiet, non-turbulent nature of the fuel tank.

Microbe growth can be eliminated through the use of commercially available biocides. There are two basic types on the market:

- ☐ The water-soluble type treats only the tank where it is introduced. Microbe growth can start again if fuel is transferred from a treated to an untreated tank.
- ☐ The diesel fuel-soluble type, such as Biobor® JF or equivalent, treats the fuel itself, and therefore, the entire fuel system.

Biobor® is a registered trademark of United States Borax and Chemical Corporation.

Any units that will sit idle for extended periods, or any units being stored, should be treated as follows: Add the biocide according to the manufacturer's instructions. This operation is most effective when performed as the tank is being filled. The use of isopropyl alcohol (dry gas) is no longer recommended due to it's negative effect on fuel lubricity.

If the fuel tanks were previously filled, add the chemicals and stir with a clean rod.

(Rev. 2004) *All information subject to change without notice.*
6SE483 0401 Copyright © 2004 DETROIT DIESEL CORPORATION

13.13.3 Fuel Lines and Flexible Hoses

Make a visual check for fuel leaks at all engine-mounted fuel lines and connections, and at the fuel tank suction and return lines. Since fuel tanks are susceptible to road hazards, leaks in this area may best be detected by checking for accumulation of fuel under the tanks.

The performance of engine and auxiliary equipment is greatly dependent on the ability of flexible hoses to transfer lubricating oil, air, coolant, natural gas and fuel oil. Diligent maintenance of hoses is an important step in ensuring efficient, economical and safe operation of the engine and related equipment.

Check hoses daily as part of the pre-start up inspection. Examine hoses for leaks and check all fittings, clamps and ties carefully. Ensure that hoses are not resting on or touching shafts, couplings, heated surfaces, including exhaust manifolds, any sharp edges or other obviously hazardous areas. Since all machinery vibrates and moves to a certain extent, clamps and ties can fatigue with age. To ensure continued proper support, inspect fasteners frequently and tighten or replace them, as necessary (refer to OEM maintenance guidelines).

Investigate leaks immediately to determine if hoses have ruptured or worn through. Take corrective action immediately. Leaks are not only potentially detrimental to machine operation, but they also result in added expense caused by the need to replace lost fluids.

CAUTION:

To avoid injury from fire, contain and eliminate leaks of flammable fluids as they occur. Failure to eliminate leaks could result in fire.

A hose has a finite service life. The service life of a hose is determined by the temperature and pressure of the air or fluid within it, its time in service, its mounting, the ambient temperatures and amount of flexing and vibration to which it is subjected. With this in mind, all hoses should be thoroughly inspected annually. Look for cover damage or indications of damaged, twisted, worn, crimped, brittle, cracked or leaking lines. Hoses having the outer cover worn through or damaged metal reinforcement should be considered unfit for further service.

 Copyright © 2004 DETROIT DIESEL CORPORATION

NOTICE:

It is especially important that identical DDC replacement hoses be used on the Series 60G engine. The fuel line from the regulator to the PSV and air/fuel balance lines are precisely specified in terms of material, diameter and length. Incorrect substitution of these hoses can lead to poor performance and possible engine damage.

All hoses in or out of machinery should be replaced during major overhaul or after a maximum of five years service.

The final fuel regulator on the Series 60G engine does not require any adjustment or maintenance and is replaced as a complete assembly.

13.13.4 Cooling System

Check the coolant level daily. Ensure it is within 2 in. (50 mm) of the filler neck on the radiator or heat exchange filler bottle r or per the recommendation of the equipment manufacturer. Add recommended coolant, as necessary. Refer to section 5.4. **Do not overfill**.

Make a visual check for cooling system leaks. Check for an accumulation of coolant beneath the engine during periods when the engine is running and when the engine is stopped.

NOTE:
In order to ensure the integrity of the cooling system, it is recommended that a periodic cooling system pressure check be performed. Pressurize the cooling system (103-138 kPa, 15-20 lb/in.^{2}) using radiator cap and J 24460-01. Do not exceed 138 kPa (20 lb/in.^{2}). Any measurable drop in pressure may indicate an external/internal leak. Whenever the oil pan is removed, the cooling system should be pressure checked as a means of identifying any internal coolant system leaks.

CAUTION:

To avoid injury when using caustic cleaning agents, follow the chemical manufacturers usage, disposal, and safety instructions.

Clean the cooling system every 24 months using a good radiator cleaning compound in accordance with the instructions on the container. After the cleaning operation, rinse the cooling system thoroughly with fresh water. Then fill the system with the proper anti-freeze/water mixture and pre-charge of inhibitors. When a thorough cleaning of the cooling system is required, it should be flushed.

Inspect all of the cooling system hoses at least once every 30,000 miles (48,000 km) (300 hours for industrial and marine applications) to ensure the clamps are tight and properly seated on the hoses and to check for signs of deterioration. Replace the hoses, if necessary. Refer to OEM maintenance guidelines.

(Rev. 2004) *All information subject to change without notice.*
6SE483 0401 Copyright © 2004 DETROIT DIESEL CORPORATION

Drain the engine coolant as follows:

1. Allow engine to cool.

CAUTION:

To avoid injury from the expulsion of hot coolant, never remove the cooling system pressure cap while the engine is at operating temperature. Remove the cap slowly to relieve pressure. Wear adequate protective clothing (face shield or safety goggles, rubber gloves, apron, and boots).

2. Remove drain plugs from the bottom of water pump, at the right rear of the engine, and at the bottom of the thermostat housing.
3. Remove radiator or heat exchanger tank pressure cap.
4. Open drain valve at bottom of radiator or charge air cooler.
5. Collect used antifreeze in a suitable container, and dispose of the solution in an environmentally responsible manner, according to state and federal (EPA) recommendations.
6. Replace all drain plugs, and close any drain valves.
7. Refill the system with proper antifreeze and clean soft water mixture.
8. Purge entrapped air by allowing the engine to warm-up without the pressure cap installed. With the transmission or marine gear in neutral, increase engine speed above 1000 r/min. Add coolant as required.
9. Allow engine to cool.
10. Install the pressure cap after filling the coolant level to the bottom of the radiator or heat exchanger filler bottle neck.

 Copyright © 2004 DETROIT DIESEL CORPORATION

If the cooling system is contaminated, flush the cooling system as follows:

CAUTION:

To avoid injury from the expulsion of hot coolant, never remove the cooling system pressure cap while the engine is at operating temperature. Remove the cap slowly to relieve pressure. Wear adequate protective clothing (face shield or safety goggles, rubber gloves, apron, and boots).

1. Drain the coolant from the engine.

NOTICE:

If the engine is hot, fill slowly to prevent rapid cooling and distortion of the engine castings.

2. Refill with soft clean water.
3. Refer to section 13.13.1 for the exhaust caution before preceeding. Start the engine and operate it for 15 minutes after the thermostats have opened to thoroughly circulate the water.
4. Stop the engine and drain the unit completely.
5. If the engine is hot, refill slowly with clean water and operate for 15 minutes after the thermostats have opened.
6. Drain the unit completely.
7. If the engine is hot, fill slowly with 50/50 antifreeze water and pre-charge of inhibitor or required coolant and inhibtor. Refer to section 5.4.
8. Purge entrapped air by allowing the engine to warm-up without the pressure cap installed. With the transmission or marine gear in neutral, increase engine speed above 1000 r/min. Add coolant as required.
9. Allow engine to cool.
10. Install the pressure cap after filling the coolant level to the bottom of the radiator or heat exchanger filler neck.

(Rev. 2004) *All information subject to change without notice.*
6SE483 0401 Copyright © 2004 DETROIT DIESEL CORPORATION

13.13.5 Guidelines for Water Pump Replacement

The investigation of engine water pumps returned to the factory has, in many cases, revealed normal weepage from the water pump weep hole. This condition is often misdiagnosed as a water pump seal failure. The diagnostic procedure that follows is used to determine if the engine water pump seal has failed or is functioning normally. Guidelines are also presented for the steps that should be taken prior to water pump replacement.

13.13.5.1 Source of Premature Failure of Water Pump Seals

Water pump seal failures may result from debris or deposits at the seal surface, low coolant levels, improper coolant chemicals or fabrication defects. Fabrication defects are quickly evident at low mileage/engine hours, while failures caused by debris or deposits at the seal surface appear over the service life of the pump. Premature failure of the water pump seal is typically an indication of poor coolant and lubricating oil maintenance.

Improper coolant maintenance can lead to excess supplemental coolant additives (SCA) in the coolant. This can cause excess phosphorus and silicates to precipitate within the cooling system. Deposits can build up between the shaft and the seal, causing a leak path or an abrasive effect on the seal face. Coolant formulated with hard water can also result in excess magnesium and calcium precipitation, with the same effect on the water seal. For additional information on the effects of inadequate cooling system maintenance, see DDC publication, 7SE390, *Cooling System Technician's Guide,* "available from authorized Detroit Diesel distributors.

On gear-driven water pumps, oil from the weep hole indicates a failure of the oil seal within the water pump. The normal causes for premature failure of the oil seal are excessive wear, debris, and soot in the engine oil, thatcan result from extended oil change intervals. These contaminants act abrasively on the seal-to-shaft interface.

 Copyright © 2004 DETROIT DIESEL CORPORATION

13.13.5.2 Water Pump Seal Assessment

The following steps should be followed to verify leakage prior to removal and replacement of the water pump:

1. When accessible, clean any debris or obstruction from the weep hole, being careful not to disturb the seal. This will help address the nature of the leakage. See Figure 13-4.

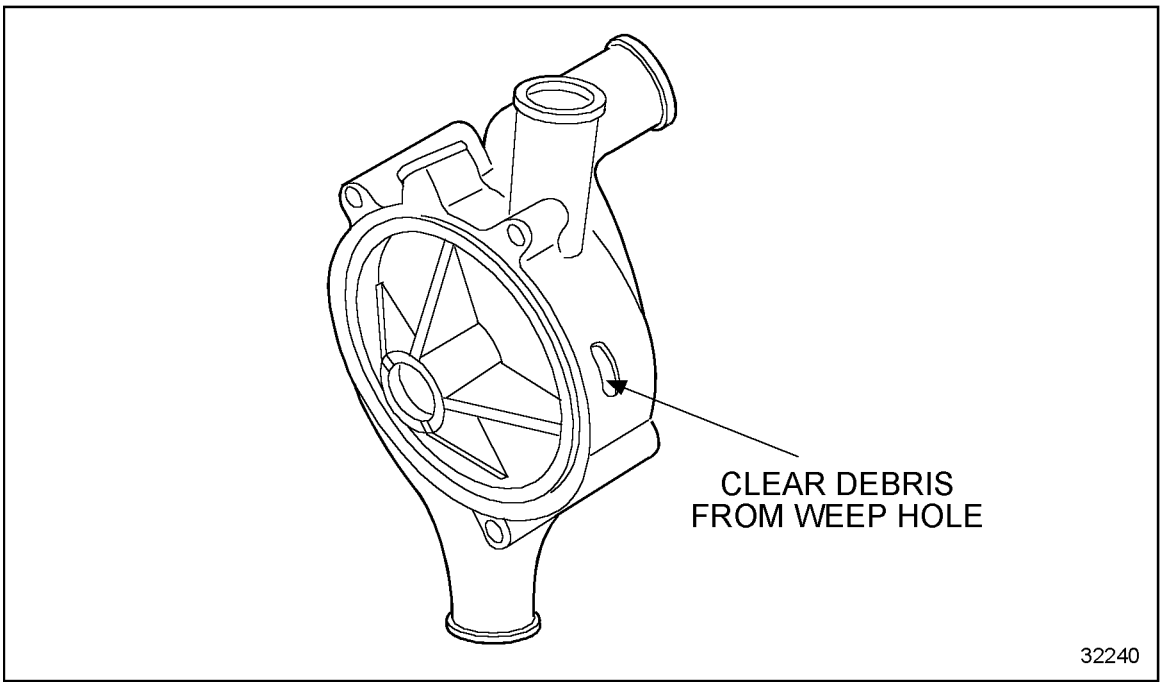

Figure 13-4 Water Pump Weep Hole

2. If no leakage of coolant is observed under operating conditions, the water pump should not be replaced.

NOTE:
Chemical streak trails and seepage are normal, but continuous drip leaks are not.

NOTE:
Weeping is described as a passing of liquid across a sealed surface of about 1-5 drops per day's usage. See Figure 13-5. Seeping describes a greater amount of liquid equal to more than 5 drops per day's usage. Leaking describes a near-constant dripping of liquid. See Figure 13-6.

(Rev. 2004) *All information subject to change without notice.*
6SE483 0401 Copyright © 2004 DETROIT DIESEL CORPORATION

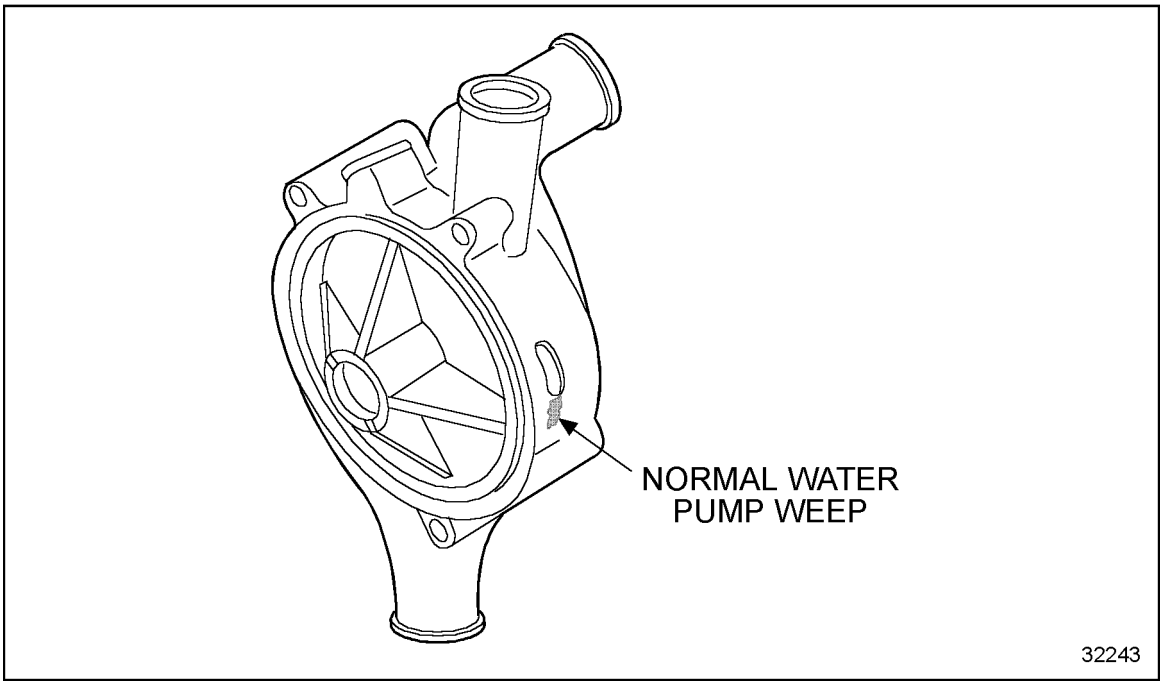

Figure 13-5 Water Pump Showing Normal Weeping

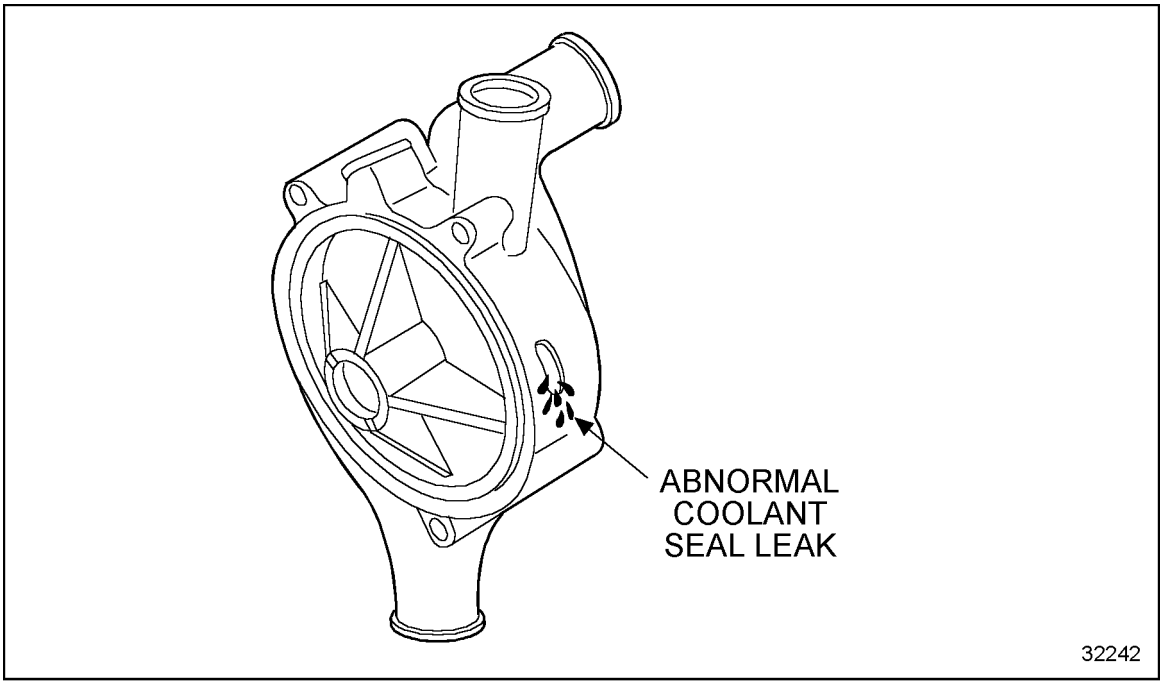

Figure 13-6 Water Pump Showing Abnormal Leaking

NOTE:
A water pump thatexhibits a chemical build-up in the weep hole does not necessarily require replacement. See Figure 13-7. Some weeping is expected as a result of the coolant lubrication of the seal surface.

 Copyright © 2004 DETROIT DIESEL CORPORATION

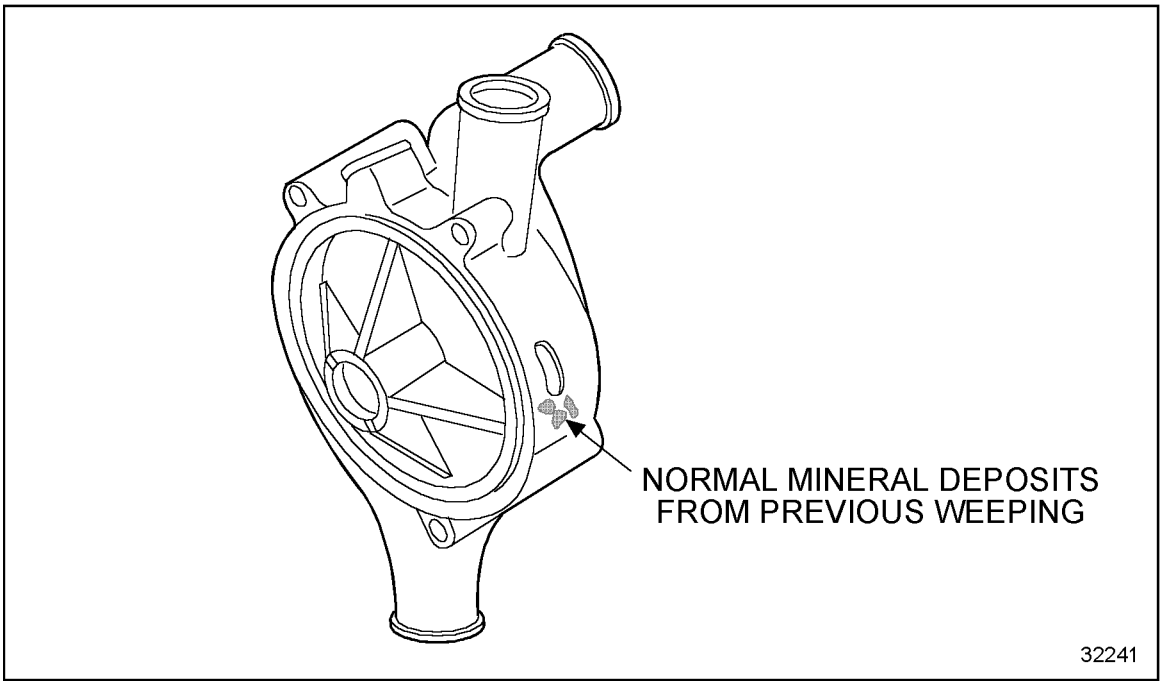

Figure 13-7 Water Pump Showing Normal Mineral Deposits Caused By Weeping

Replace water pump if oil is found coming from the weep hole on gear-driven water pumps. The engine oil must then be tested for excess debris, and replaced if not conforming to specifications.

The SCA inhibitors and glycol concentration must be checked according to the recommended maintenance schedule as described in the Detroit Diesel *Series 60 Service Manual* and Operators Guide for that specific engine or DDC publication 7SE298, available from authorized Detroit Diesel distributors.

13.13.5.3 Water Pump Leak Test Summary

Test water pump for leaks as follows:

1. Ensure weep hole is clear.
2. Refer to section 13.13.1 for the exhaust caution before preceding. Run engine and look for coolant leaking from weep hole.
   [a] Do not replace water pump due to chemical streaks.
   [b] Replace the water pump if coolant is leaking or dripping.

(Rev. 2004) *All information subject to change without notice.*
6SE483 0401 Copyright © 2004 DETROIT DIESEL CORPORATION

3. Run engine and check for oil leaks from weep hole.
   [a] If oil leak is observed, replace the water pump and conduct an oil analysis per publication, 7SE390, available from authorized Detroit Diesel distributors. Then replace water pump as needed.
4. Test and reformulate the coolant to proper glycol and SCA concentrations per the Service Manual Maintenance schedule as indicated in the engine operators guide or DDC publication, 7SE298, available from authorized Detroit Diesel distributors.

13.13.6 Test Procedure for DDEC Engines Equipped with Low Coolant Level Sensor (CLS)

The following test procedure is for engine cooling systems that are equipped with a low coolant level sensor mounted in the top tank of the radiator or the heat exchanger. This sensor must be tested annually or every 100,000 miles (161,000 km), whichever comes first.

CAUTION:

To avoid injury from the expulsion of hot coolant, never remove the cooling system pressure cap while the engine is at operating temperature. Remove the cap slowly to relieve pressure. Wear adequate protective clothing (face shield or safety goggles, rubber gloves, apron, and boots).

1. Allow the engine to cool to ambient temperature.
2. Turn ignition switch on and verify no coolant level sensor codes. (DO NOT START ENGINE.)
3. Reduce coolant level below CLS level.
4. Check "stop engine light". It should illuminate within 10 seconds, indicating low coolant level.
   [a] If light illuminates, system is working properly.
   [b] If light does not illuminate, refer to section 13.13.6.1.
5. Fill coolant to proper level. Refer to section 13.13.4.

 Copyright © 2004 DETROIT DIESEL CORPORATION

13.13.6.1 Stop Engine Light Did Not Illuminate

If "stop engine light" did not illuminate, use the following procedure:

1. Check wiring harness and mating connector for damaged wires or pins.
2. Remove and clean sensor. Wash with mild detergent and rinse with clean water.
3. Submerge sensor in container of water up to connector with wiring harness connected.
4. Turn ignition switch on. (DO NOT START ENGINE.)
5. Slowly remove sensor from water.
6. The light should illuminate, indicating low coolant level.
7. If light does illuminate, system is working properly.
8. If light still does not illuminate, replace sensor and return it to DDC.

13.13.7 Transmission or Marine Gear

Check the marine gear oil pressure. The operating oil pressure range at operating speed is 621 – 1034 kPa (90 – 150 lb·in.) The operating oil pressure varies with the different DDC/Twin Disc gears. Check and, if necessary, replenish the oil supply in the transmission.

13.13.8 Turbocharger

Inspect the mountings, intake and exhaust ducting and connections for leaks. Check the oil inlet and outlet lines for leaks and/or restrictions to oil flow. Inspect water-cooled turbochargers for coolant leaks. Check for unusual noise or vibration and, if excessive, remove the turbocharger and correct the cause. Refer to section 6.6.2.

13.13.9 Battery

On batteries equipped with charge indicator eyes, periodically check for adequate charge. If batteries are the filler-cap type, check the level of the electrolyte every 100 hours or every 7,500 miles (12,000 km). Inspect marine engine batteries for charge every month. In warm weather, however, check more frequently due to a more rapid loss of water from the electrolyte. Electrolyte should be maintained in accordance with the recommendations of the battery manufacturer. Periodically remove, check and clean battery post terminals and connections. Replace corroded or damaged parts. Refer to section 8.3.2.

(Rev. 2004) *All information subject to change without notice.*
6SE483 0401 Copyright © 2004 DETROIT DIESEL CORPORATION

13.13.10 Drive Belts

New standard vee-belts will stretch after the first few hours of operation. Refer to section 13.13.1 for the exhaust caution before preceding. Run the engine for 10 to 15 minutes at 1200 r/min to seat the belts, then readjust the tension. Check the belts and tighten the fan drive, battery charging alternator and other accessory drive belts after 1/2 hour or 15 miles and again after 8 hours or 250 miles (402 km) of operation. Thereafter, check the tension of the drive belts every 100 hours or 7,500 miles (12,000 km) and adjust, if necessary. Belts should be neither too tight nor too loose. Belts that are too tight impose excess loads on the crankshaft, fan and/or alternator bearings, shortening both belt and bearing life. Excessively overtightened belts can result in crankshaft breakage. A loose belt will slip and may cause damage to accessory components.

Replace ALL belts in a set when one is worn. Single belts of similar size should not be used as a substitute for a matched belt set. Premature belt wear can result because of belt length variation. All belts in a matched belt set are within 0.032 in. (0.81 mm) of their specified center distances.

When installing or adjusting an accessory drive belt, be sure the bolt at the accessory adjusting pivot point is properly tightened, as well as the bolt in the adjusting slot.

Adjust the belt tension as listed in Table 13-1and listed in Table 13-2, using J 41251-B.

Fan Drive Single Belt	Fan Drive 2 or 3 Belts
80-100 lb(355 - 455 N)	60-80 lb(266 - 355 N)

Table 13-1 Fan Drive Belt Tensioning

BELT	NEW	USED
Two 1/2 in. Vee-Groove	125 lbs.	100 lbs.
2-Groove Powerband®	200 lbs. 890 N	150 lbs. 667 N
12-Rib Poly-Vee 50 DN Alternator	350 lbs. 1,557 N	250 lbs. 1,112 N
6-Rib Poly-Vee	220 lbs. 979 N	180 lbs. 801 N

Table 13-2 Alternator Drive Belt Tensioning

If a belt tension gage is not available, adjust the belt tension so that a firm push with the thumb, at a point midway between the two pulleys, will depress the belt 12.70-19.05 mm (0.500 -0.750 in.).

NOTE:
When installing or adjusting an accessory drive belt, ensure the bolt at the accessory adjusting pivot point is properly tightened, as well as the bolt in the adjusting slot.

NOTE:
Drive belts (vee and poly-vee) should be replaced every 2,000 hours or 100,000 miles (161,000 km).

 Copyright © 2004 DETROIT DIESEL CORPORATION

A single poly-vee belt is used with the 50 DN Alternator. The 50 DN alternator drive belt tension is set at 1558 N (350 lb) during engine assembly and belt replacement. A new belt loses tension rapidly during the first few minutes of operation. Therefore, it is important to check the tension after 30 minutes of operation. Allow the belt to cool with the engine off for 30 minutes before measuring tension.

- ☐ If the tension on the belt is greater than or equal to 1115 N (250 lb), no further tensioning is required.
- ☐ If the tension on the belt is less than 1115 N (250 lb), tension the belt to 1115 N (250 lb).

Periodic tensioning of the belt is required to maximize belt life. The belt tension should be measured once per month or every 7,500 miles (12,000 km), whichever comes first.

A belt tensioning tool is available from Detroit Diesel, J 41251-B. The gage is calibrated from 779 to 1558 N (175 to 350 pounds). The following procedure will describe proper use of the belt tensioning tool:

NOTICE:
Failure to properly orient the drive belt when installing it over the pulleys may result in belt damage at engine startup.

1. Poly-vee belts are very sensitive to undertension. Without a gage and proper tension measurement, the belt tension will probably be too low. Undertension wears belts rapidly and will lead to premature belt failure.
2. Measure the belt tension between the alternator drive pulley and the upper idler pulley, or between the upper idler pulley and the alternator pulley.

NOTICE:
Do not let gage handle snap back after pressing handle when not installed on belt under tension. Broken gear will result.

3. Fully press the plunger on the belt gage. The belt must pass between the hook and the leg pads. The entire belt width must be supported by the hook and leg pads.
4. Use quick release on the gage handle. Read tension on the face of the gage. Repeat the measurement 2 or 3 times to ensure accuracy.
5. The support legs on the gage should not contact pulleys or any other engine hardware.
6. Keep gage clean. Dirt will wear out the leg pads.

(Rev. 2004) *All information subject to change without notice.*
6SE483 0401 Copyright © 2004 DETROIT DIESEL CORPORATION

13.13.10.1 Inspect for Rib Cracking

As a poly-vee belt goes through its natural life, it passes through several phases:

- ☐ After an extended time in service, minor rib cracks may appear, usually one or two cracks per inch of belt. See Figure 13-8. This condition is considered normal.

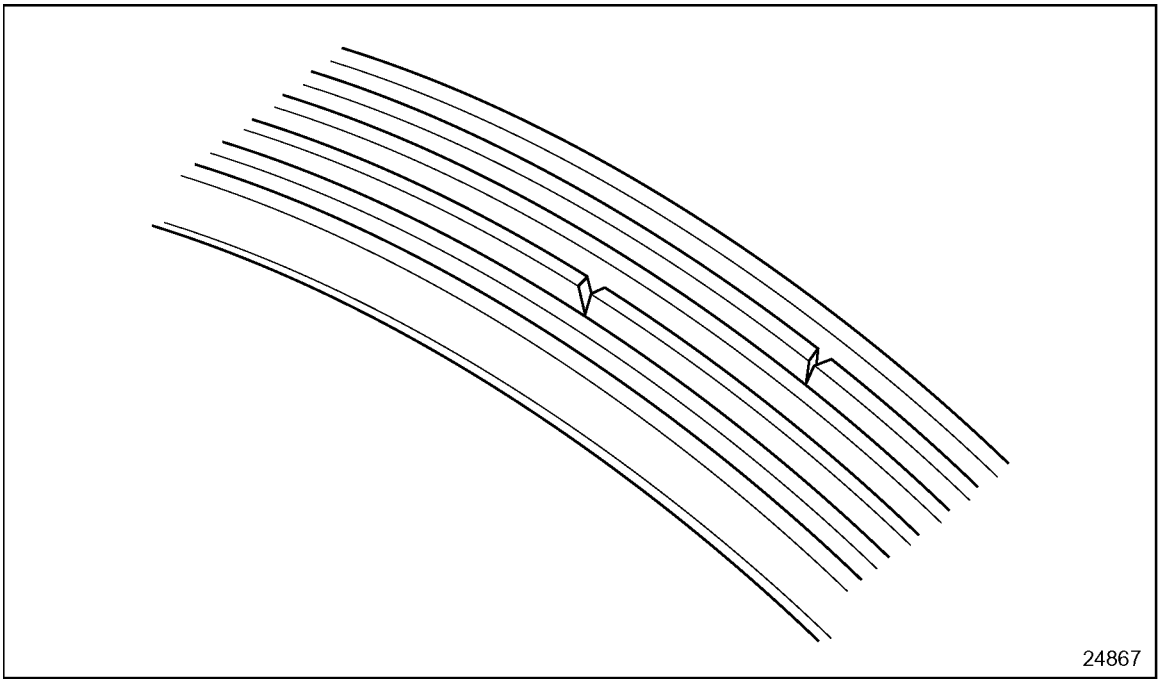

Figure 13-8 Minor Rib Cracking

 Copyright © 2004 DETROIT DIESEL CORPORATION

- A replacement concern occurs when the belt ribs exhibit severe multiple cracking (see Figure 13-9). This leads to "chunking" (breaking away of rib material). See Figure 13-10.

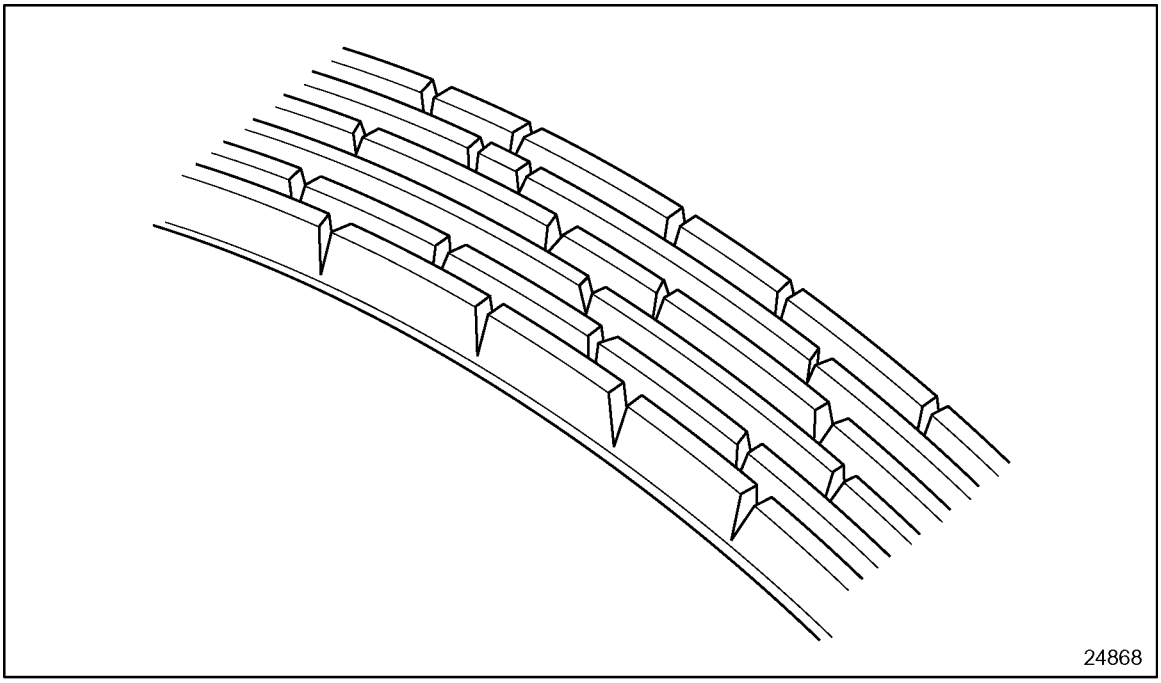

Figure 13-9 Severe Rib Cracking

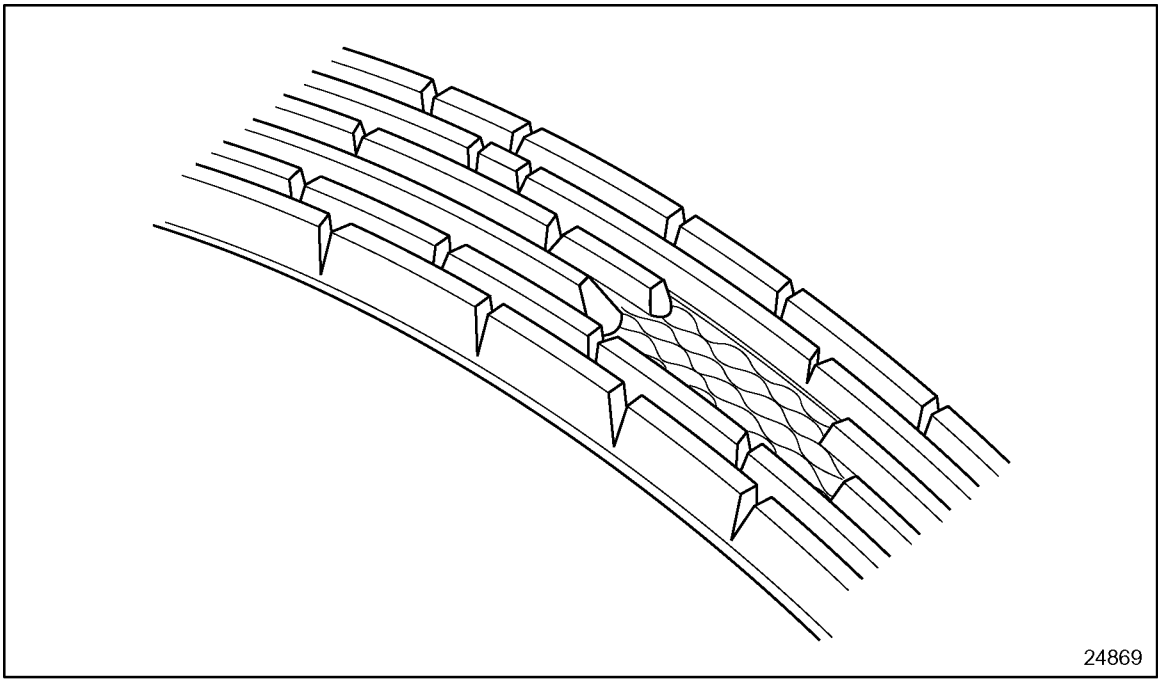

Figure 13-10 Rib Chunking

(Rev. 2004) *All information subject to change without notice.*
6SE483 0401 Copyright © 2004 DETROIT DIESEL CORPORATION

- ☐ When severe cracking or rib "chunking" appears, belt replacement is required.

13.13.10.2 Inspect for Rib Sidewall Glazing

When the ribs appear to have a shiny surface that is hard and brittle, it is usually a symptom of belt slippage. This results from inadequate tension, extreme temperature, or both. Both characteristics will lead to severe cracking and failure, often with little advance warning. If this happens, locate the cause and correct before installing a new belt.

13.13.10.3 Inspect for Belt Wear

Accelerated wear on any part of the belt fabric backing, tensile cord, or rib rubber is a concern and should be investigated. The causes of accelerated wear are:

- ☐ Drive misalignment - Misalignment must not exceed 1.59 mm (1/16 in.) for each 305 mm (12.0 in.) of belt span
- ☐ Incorrect belt length
- ☐ Environmental conditions - Temperature, excessive exposure to engine fluids, etc.
- ☐ Abrasive material - Stones, sand, metal shavings, etc.

13.13.10.4 Inspect for Foreign Objects

Premature failure may be caused by the belt coming in contact with a foreign object.

NOTICE:
Any object protruding into the path of the belt drive that contacts the belt will cause damage and failure of the belt.

Prior to installing a new belt, verify removal of any foreign objects protruding into the belt path.

13.13.10.5 Inspect for Noise Vibration

Much effort has gone into the design of each poly-vee belt drive in order to prevent noise vibration. However, field problems occasionally occur. Some causes of noise vibration are:

- ☐ Misalignment - This may cause a chirping noise, especially at or near idle speed.
- ☐ Mounting - Rigid bracketing of accessories is a must for acceptable free belt span vibration.

NOTE:
Some span vibration is to be expected during the range of engine speed and accessory loading.

- ☐ Belt tension - Insufficient belt tension may cause a high - pitched howl (squeal) or rasping sound during engine acceleration or deceleration.

 Copyright © 2004 DETROIT DIESEL CORPORATION

13.13.11 Air Compressor

Remove and clean all air compressor air intake parts every 150 hours or 15,000 miles (24,000 km). Refer to section 10.1.5. To clean either the hair-type or polyurethane-type compressor air strainer element, saturate and squeeze it in fuel oil, or any other cleaning agent that would not be detrimental to the element, until it is dirt-free. Then, dip the element in lubricating oil and squeeze it dry before placing it back in the air strainer.

For replacement of the air strainer element, contact the nearest servicing dealer; replace with the polyurethane element, if available.

Every 12 months or 30,000 miles (48,000 km) [300 hours for non-vehicle applications] tighten the air compressor mounting bolts.

13.13.12 Air Cleaner

Inspect the air cleaner element every 15,000 miles (24,000 km) for vehicle engines, 150 hours for non-vehicle engines, or more often if the engine is operated under severe dust conditions. Replace the element if necessary. Check the gaskets for deterioration and replace, if necessary. If the dry-type air cleaner is equipped with an aspirator, check for aspirator damage or clogging. Clean and repair as necessary.

Under no engine operating conditions should the air inlet restriction exceed 20 inches of water (5.0 kPa). A clogged air cleaner element will cause excessive intake restriction and a reduced air supply to the engine.

Dry-type air cleaner elements used in on-highway applications should be discarded and replaced with new elements when the maximum allowable air inlet restriction has been reached. No attempt should be made to clean or reuse on-highway elements after these intervals.

Dry-type elements used in industrial applications should be discarded and replaced with new elements after one year of service or when the maximum allowable air intake restriction has been reached, whichever comes first. In cases where the air cleaner manufacturer recommends cleaning or washing elements, the maximum service life is still one year or maximum restriction. Cleaning, washing and inspection must be done per the manufacturer's recommendations, if any.Inspection and replacement of the cover gaskets must also be done per the manufacturer's recommendations, if any.

Air Separator: Clean and oil marine engine air separator filter element and vacuum limiter every 250 hours. Replace the filter element after three cleanings. Replace the vacuum limiter every 1000 hours or every two years, whichever comes first.

13.13.13 Lubricating Oil Filter

Refer to section 3.5.1.

13.13.14 Fuel Filters (Diesel)

Refer to section 2.10.2.

(Rev. 2004) *All information subject to change without notice.*
6SE483 0401 Copyright © 2004 DETROIT DIESEL CORPORATION

13.13.15 Fuel Filters (Natural Gas)

The precision fuel metering systems of the Series 60G engine require that a fuel filter be used to screen the fuel of liquids and debris that may be carried along with the fuel in the pipeline.

The filter should not allow infiltration of particles larger than 0.05mm, and should have a replaceable element with a high capacity for accumulated dust.

The restriction offered by the filter should not exceed 12 inches of water (30 mbar).

The fuel system pressure requirements as stated in the performance curves must be maintained AFTER any pressure losses caused by the filter.

A suggested fuel filter manufacturer is: MAXITROL Model: GF80-1-1616; MAXITROL Co., 23555 Telegraph Road, PO Box 2230, Southfield, MI 48037; Phone: 248-356-1400, FAX: 248-356-0829

Install the filter properly with gas flowing as indicated by the arrow on the casting. It is also important to leave sufficient space above the cover to allow for removal of the filter insert. Frequency of filter insert maintenance is dependent upon the associated pressure drop at the filter. If the inlet fuel pressure to the engine regulator falls below the specified minimum, engine performance will be degraded.

Before changing the fuel filter, turn off the manual control fuel lever. Start and run the engine until the engine stops. This will eliminate most of the residual gas pressure when removing the filter or draining.

Check carefully for gas leaks immediately after the filter has been installed and the gas turned on. Do this before attempting to operate the engine. Use a rich liquid soap solution or other accepted leak tester on the area between the cover and housing, and at the pipe connections. Never operate the engine if leakage is detected.

13.13.16 Coolant Filter and Water Pump

Inspect the water pump drain hole every 6 months, ensuring it is open. A small chemical build up or streaking at the drain hole may occur, but this is not an indication of a defective water pump or seal. If coolant does not leak from the drain hole under normal operating conditions, do not replace the water pump. If the cooling system is protected by a coolant filter and conditioner, the element should be changed every 15,000 miles (24,000 km) or 150 hours (non-vehicle applications). Use the proper coolant filter element in accordance with instructions given under coolant specifications. Refer to section 5.4.7.

13.13.17 Cranking Motor

Refer to OEM maintenance guidelines.

 Copyright © 2004 DETROIT DIESEL CORPORATION

13.13.18 Air System

It is important with turbocharged engines that all the connections in the air system be checked to ensure they are tight. Check all hoses and ducting for punctures, deterioration or other damage and replace, if necessary.

Every 250 hours or one year, whichever comes first, remove the square head recess plugs (2) from the bottom of the charge air cooler and drain. reinstall plugs and tighten securely.

Refer to OEM maintenance guidelines.

13.13.19 Exhaust System

Check the exhaust manifold retaining bolts and other connections for tightness. Check for proper operation of the exhaust pipe rain cap, if so equipped.

Refer to OEM maintenance guidelines.

13.13.20 Engine (Steam Clean)

Refer to OEM maintenance guidelines.

NOTICE:
Do not apply steam or solvent directly on the battery charging alternator, starting motor, DDEC components, sensors, or other electrical components, as damage to electrical equipment may result.

Steam clean the engine and engine compartment.

13.13.21 Radiator

Inspect the exterior of the radiator core every 12 months, 30,000 miles (48,000 km), or 300 hours for non-vehicle applications. If necessary, clean it with a quality grease solvent, such as mineral spirits, and dry it with compressed air. **Do NOT use fuel oil, kerosene or gasoline.** It may be necessary to clean the radiator more frequently if the engine is being operated in extremely dusty or dirty areas.

Refer to OEM maintenance guidelines.

13.13.22 Oil Pressure

Under normal operation, oil pressure is noted each time the engine is started. If equipment has warning lights instead of rather than pressure indicators, the pressure should be checked and recorded every 60,000 miles (96,000 km) for vehicle engines or 600 hours for stationary, industrial, or marine engines.

Refer to OEM maintenance guidelines.

(Rev. 2004) *All information subject to change without notice.*
6SE483 0401 Copyright © 2004 DETROIT DIESEL CORPORATION

13.13.23 Battery Charging Alternator

Inspect the terminals for corrosion and loose connections and the wiring for frayed insulation.

Refer to OEM maintenance guidelines.

13.13.24 Engine and Transmission Mounts

Check the engine and transmission mounting bolts and the condition of the mounting pads every 600 hours or 60,000 miles (96,500 km). Tighten and repair as necessary.

Refer to OEM maintenance guidelines.

13.13.25 Crankcase Pressure

Check and record the crankcase pressure every 600 hours - 96,000 km (60,000 miles).
Refer to section 16.7.

13.13.26 Crankcase Pressure Test Without Dynamometer

To check crankcase pressure without a dynamometer a crankcase pressure sensor kit is available to measure crankcase pressure using existing vehicle wiring. The sensor is installed into the dipstick tube and plugged into the oil pressure sensor harness. The crankcase sensor is connected to the DDEC® ECM and will record the crankcase pressure as oil pressure readings used for conversion to inches of H_2O.

Assemble crankscase pressure components as follows:

1. Install three seals on crankcase pressure sensor adaptor.

 Copyright © 2004 DETROIT DIESEL CORPORATION

2. Thread crankcase pressure sensor into adaptor. See Figure 13-11.

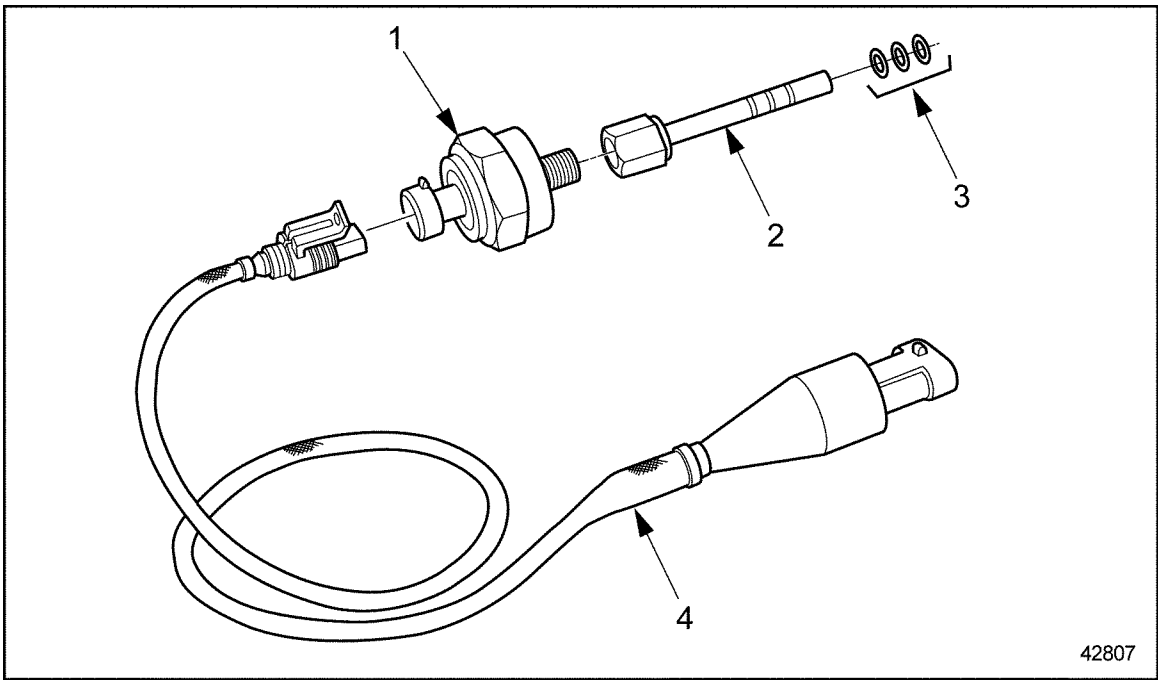

1. Crankcase Pressure Sensor
2. Sensor Adaptor Tube
3. Seals
4. Sensor Harness

Figure 13-11 Crankcase Pressure Sensor Kit Components

To check crankcase pressure use the following procedure:

1. Remove the dipstick from the engine.
2. Insert adaptor into dipstick tube.
3. Connect crankcase pressure sensor harness to sensor and route harness over engine so as to avoid hot exhaust components.
4. Unplug the wiring harness from the oil pressure sensor on the left rear of the block, and plug the crankcase pressure sensor harness into the oil pressure sensor wiring.
5. Plug Diagnostic Data Reader (DDR) into the vehicle diagnostic port plug inside cab of truck.
6. Start and run vehicle until normal operating temperatures are reached before beginning the test.

(Rev. 2004) *All information subject to change without notice.*
6SE483 0401 Copyright © 2004 DETROIT DIESEL CORPORATION

CAUTION:

To avoid injury from loss of vehicle/vessel control, the operator of a DDEC equipped engine must not attempt to use or read the Diagnostic Data Reader when the vehicle/vessel is moving.

7. With engine at operating temperature, have an assistant trigger a snapshot while the vehicle is operating at 1200 to 1350 RPM at full throttle using a loaded trailer to maintain 100% load.
8. Print the reading, including RPM, %LOAD, OIL PRESSURE, OIL TEMPERATURE, COOLANT TEMPERATURE and TURBO BOOST PRESSURE.

 Copyright © 2004 DETROIT DIESEL CORPORATION

9. Refer to conversion chart listed in Table 13-3to convert oil pressure reading to inches of H_2O crankcase pressure.

OIL PRESSURE READING lb/in.²	kPa	Crankcase Pressure in H_2O
30.0	207	0.00
31.0	214	0.47
32.0	221	0.95
33.0	228	1.43
34.0	234	1.91
35.0	241	2.39
36.0	248	2.87
36.4	251	3.0
37.0	255	3.35
38.0	262	3.83
38.4	265	4.0
39.0	269	4.31
40.0	276	4.79
41.0	283	5.27
42.0	290	5.75
43.0	296	6.23
44.0	303	6.70
45.0	310	7.18
46.0	317	7.66
47.0	324	8.14
48.0	331	8.62
49.0	338	9.10
50.0	345	9.58
51.0	352	10.06
52.0	359	10.54
53.0	365	11.02
54.0	372	11.50
55.0	379	11.98
56.0	386	12.46
57.0	393	12.94
58.0	400	13.41

Table 13-3 Acceptable Oil Pressure Versus Crankcase Pressure Limits

(Rev. 2004) *All information subject to change without notice.*
6SE483 0401 Copyright © 2004 DETROIT DIESEL CORPORATION

13.13.27 Fan Hub

If the fan bearing hub assembly has a grease fitting, use a hand grease gun and lubricate the bearings with one shot of Mobilgrease® Hp, or an equivalent lithium-base multi-purpose grease every 100,000 miles (160,000 km) for vehicle engines or 1,050 hours for non-vehicle engines. Care should be taken not to overfill the housing.

Refer to OEM maintenance guidelines.

Mobilgrease® is a registered trademark of the Mobil Corporation.

13.13.28 Thermostats and Seals

Inspect the thermostats and seals every 24 months. Refer to section 4.5.2.1. The thermostats and seals should be replaced every 200,000 miles (322,000 km) for vehicle engines or 4,000 hours for non-vehicle engines, except marine. Replace at the following intervals on marine engines: Heat exchanger-cooled pleasure craft, every 400 hours or 2 years (whichever comes first); keel-cooled commercial craft, every 10,000 hours or 2 years (whichever comes first).

13.13.29 Intake System

Because natural gas is mixed with the air before the turbocharger on the Series 60G engine, special precautions and inspections are required. Inspect the fuel system components (regulator, PSV, and mixer), intake ducting, turbocharger compressor connections, charge air cooler connections, throttle connections, and intake manifold connections for leaks. Any leak in the intake system downstream of the mixer will result in reduced engine performance and the possible release of a combustible mixture of fuel/air into the atmosphere. The charge air cooler should be tested for leaks as recommended by the manufacturer.

The throttle used on the Series 60G engine is fully enclosed, automatically calibrated at engine start up and requires no adjustment or maintenance. The throttle is serviced as a complete unit.

13.13.30 Crankcase Breather

Remove the internally mounted (in the engine rocker cover for diesel engines and on front gear case cover for natural gas engines) crankcase breather assembly annually (vehicle engines) or every 1,050 hours (non-vehicle engines) and wash the steel mesh pad in clean fuel oil. Refer to section 1.6.6. This cleaning period may be reduced or lengthened according to the severity of service.

 Copyright © 2004 DETROIT DIESEL CORPORATION

The rocker cover-mounted breather assembly (part number 23512984) and seal ring (part number 23515211) used in the closed crankcase breather system should be *replaced* every 4000 engine operating hours. These parts are not reusable and no attempt should be made to clean or reuse them. See Figure 13-12.

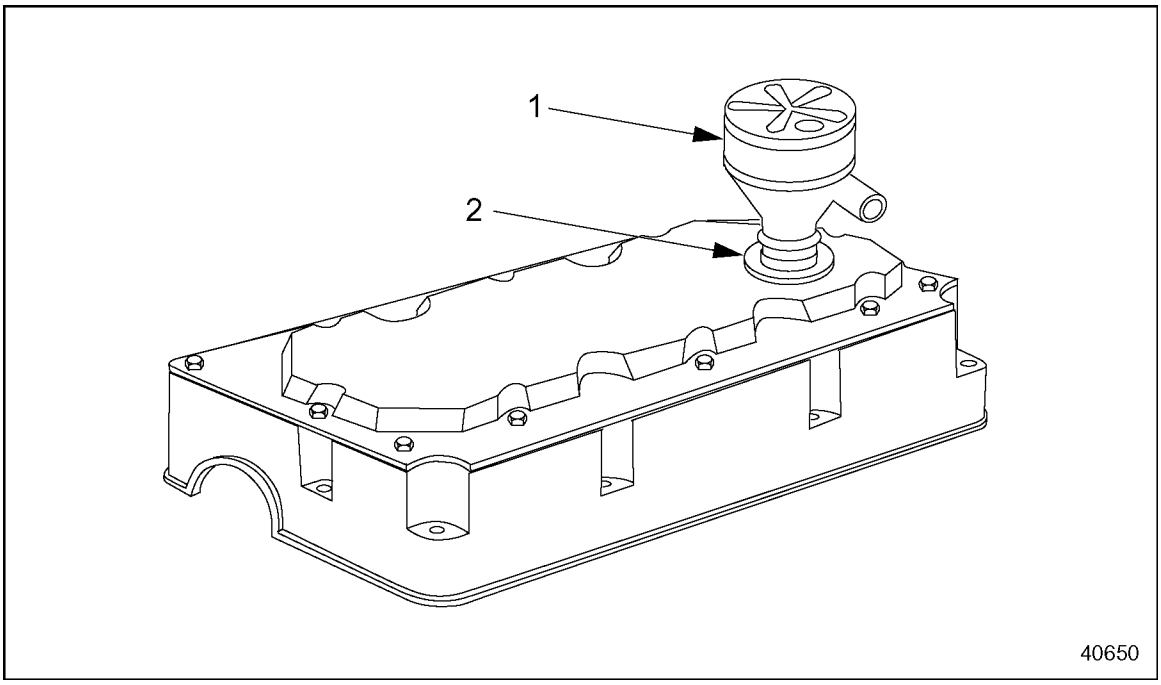

1. Breather
2. Seal

Figure 13-12 Rocker Cover-Mounted Breather Location

(Rev. 2004) *All information subject to change without notice.*
6SE483 0401 Copyright © 2004 DETROIT DIESEL CORPORATION

13.13.31 Engine Tune-up

There is no scheduled interval for performing an engine tune-up. As long as the engine performance is satisfactory, no tune-up should be needed.

The valve lash and injector heights on Series 60 diesel-fueled engines must be measured and, if necessary, adjusted after the first 60,000 miles (96,000 km) or 24 month period, whichever comes first, or after the first 1500 hours for marine engines. Once the initial measurements and adjustments have been made, any changes beyond this point should be made only as required to maintain satisfactory engine performance.

Refer to section 12.2 of this service manual for valve lash and injector height adjustment procedures.

NOTICE:
Failure to measure valve clearances and injector heights at the required initial period and make necessary adjustments may result in gradual degradation of engine performance and reduced fuel combustion efficiency.

The valve lash on Series 60G natural gas-fueled engines should be checked and adjusted as follows:

- ☐ Truck and Motor Coach Engines - Check every 36,000 miles (58,000 hm) or 12 months, whichever comes first, and adjust if necessary.
- ☐ Generator Set Engines - Check every 1,500 hours of operation or 12 months, whichever comes first, and adjust if necessary.

Refer to section 12.4 of this service manual for valve lash adjustment procedures.

NOTICE:
Failure to measure valve lash at the required intervals and make necessary adjustments may result in gradual degradation of engine performance and reduced fuel combustion efficiency.

 Copyright © 2004 DETROIT DIESEL CORPORATION

13.13.32 Marine Gear

Check the marine gear oil level daily and fill to the proper level with the required lubricant. The oil and filter maintenance requirements for Detroit Diesel (Twin Disc) marine gears are listed in Table 13-4.

Oil Service Class Use API service classification CD, CD-II, CF-2, or CE, CF or CG-4 engine oil which is certified to pass TO2 or TO4 and C-4 specifications or meet the requirements of MIL-L-2104E. Engine oil may be used, provided it meets these requirements.		
Oil Viscosity		
Sump Temperature, also Oil Temperature into Heat Exchanger		Recommended Oil Viscosity
During Start-Up	Steady Operating Conditions	
-	Below 150°F (66°C)	This operating condition is not approved.
32°F (0°C) Min.	150-185°F (66-85°C)	SAE viscosity number 40 engine oil 1.12:1-2.54:1
32°F (0°C) Min.	150-185°F (66-85°C)	SAE viscosity number 40 engine oil 3.10:1-4.95:1
32°F (0°C) Min.	175-210°F (80-99°C)	SAE viscosity number 40 engine oil 3.10:1-4.95:1
-	Above 210°F (99°C)	This operating condition is not approved.
Oil and Filter Change Interval First oil and filter change should take place after 10 hours and thereafter every 1000 hours of operation for both filter element and oil, or 6 months, whichever occurs first.		
Filter Screen Remove and clean after first 10 hours and thereafter every 1000 hours of operation, or 6 months, whichever comes first.		

Table 13-4 DDC (Twin Disc) Marine Gear Lube Oil and Filter Change Requirements

Check marine gear mounting bolts and the condition of the mounting pads every 1,000 hours and tighten or repair, as required.

Replace marine gear oil coolers onn pleasure craft marine engines every 4 years or 8000 hours, whichever comes first. Replace marine gear oil coolers on commercial marine engines every 4 years or 10,000 hours, whichever comes first.

(Rev. 2004) *All information subject to change without notice.*
6SE483 0401 Copyright © 2004 DETROIT DIESEL CORPORATION

13.13.33 Raw Water System Zincs

Heat exchanger zincs should be checked initially after the first 60 hours. Thereafter, inspect and clean or replace on pleasure craft marine engines every 200 hours or one year, whichever comes first. Inspect and clean or replace on commercial marine engines every 5000 hours or one year, whichever comes first.Clean with a wire brush if serviceable. Replace if badly deteriorated. Zinc anodes are generally found in the heat exchanger assembly, the raw water pump elbows, the fuel cooler, and the engine/marine gear auxiliary coolers. See Figure 13-13.

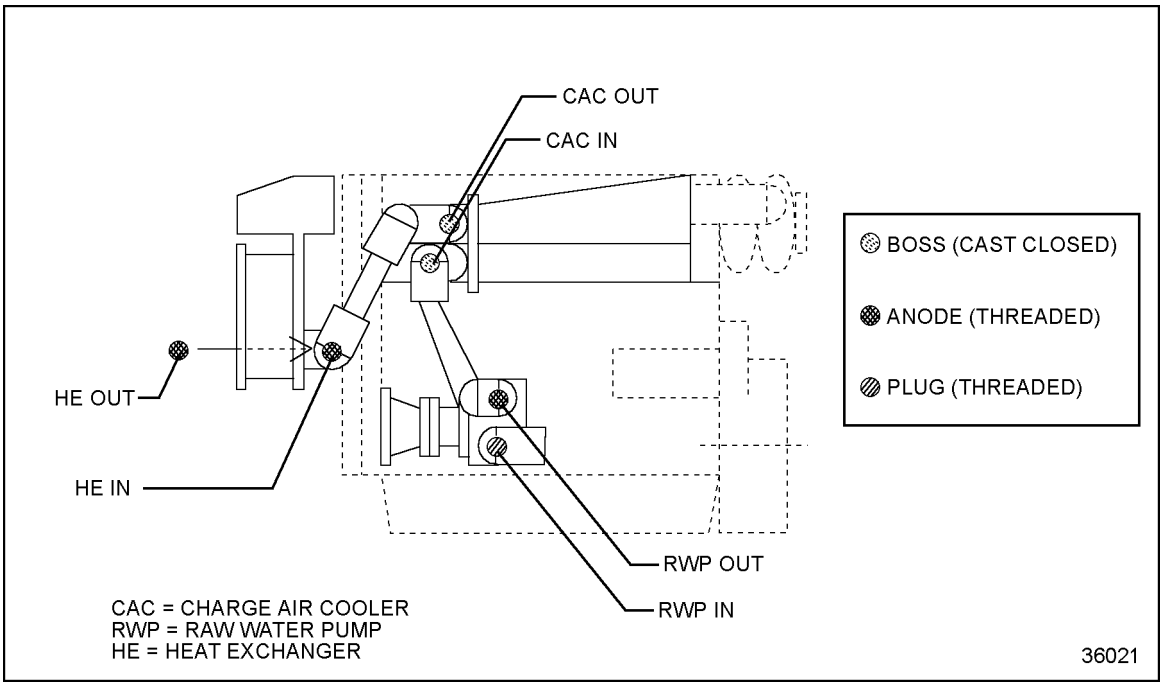

Figure 13-13 Zinc Anode Locations — Heat Exchanger-Cooled Marine Engine

13.13.34 Raw Water Pump

A raw water pump seal malfunction is indicated by leakage of water from the openings in the pump housing. These openings, located between the pump mounting flange and the inlet and outlet ports, must remain open at all times.

Leaky seals require replacement. Worn or brittle flexible impellers should be replaced. The raw water pump body or liner should also be checked for cracks or wear and replaced, if necessary. Authorized Detroit Diesel service outlets are properly equipped to perform these services.

 Copyright © 2004 DETROIT DIESEL CORPORATION

13.13.35 Charge Air Cooler/Auxiliary Pump

Every 5000 hours or one year, whichever comes first, the charge air cooler on keel-cooled engines should be flushed with a mild solvent and rinsed with clean, fresh water. The engine-mounted auxiliary raw water pump used to circulate coolant through the charge air cooler should be examined periodically to make sure the weep hole is open and unblocked. A plugged weep hole may lead to water pump seal and bearing damage, which could cause pump malfunction. The charge air cooler/air intake manifold assembly on heat exchanger-cooled engines does not require periodic maintenance. See Figure 13-14.

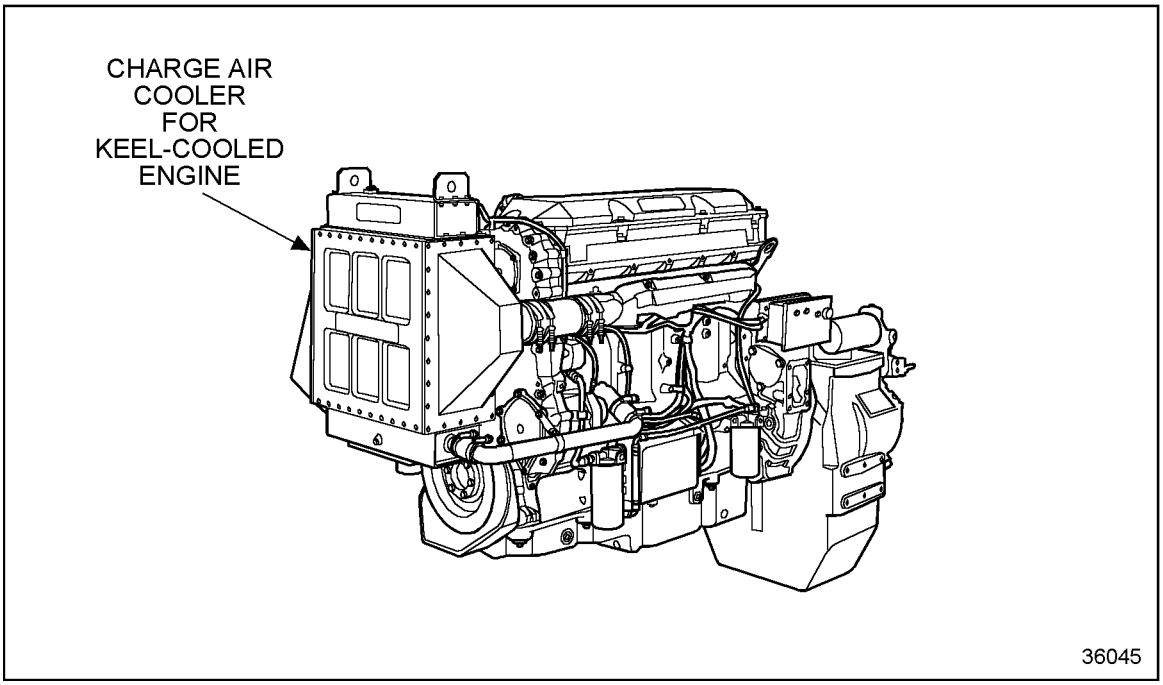

Figure 13-14 Typical Charge Air Cooler for Keel-Cooled Engine

(Rev. 2004) *All information subject to change without notice.*
6SE483 0401 Copyright © 2004 DETROIT DIESEL CORPORATION

13.13.36 Heat Exchanger

Every 400 hours or 2 years, whichever comes first, the heat exchanger core should be flushed with a mild solvent and rinsed with clean, fresh water to remove dust, dirt, or other contamination from the element. See Figure 13-15. Authorized Detroit Diesel service outlets are properly equipped and have the trained personnel to perform this service.

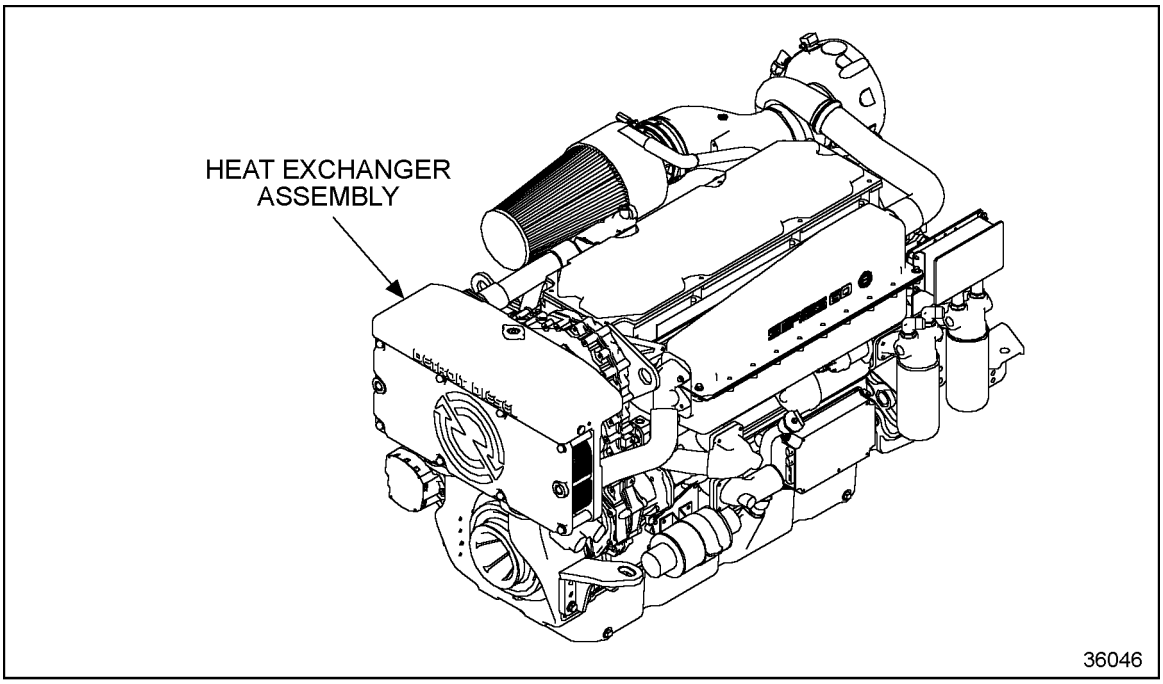

Figure 13-15 Typical Heat Exchanger Assembly

13.13.37 Fuel Cooler

Every 400 hours or two years, whichever comes first, the fuel cooler should be removed, back flushed with clean, fresh water to remove any contaminants, and inspected before being reinstalled. Refer to section 2.15.

Fuel coolers should be replaced every 4 years or every 4,000 operating hours, whichever comes first.

13.13.38 Fuel Injectors

Replace fuel injectors on pleasure craft marine engines every 1,000 hours of operation. Replace injectors on commercial marine engines every 5,000 hours of operation.

 Copyright © 2004 DETROIT DIESEL CORPORATION

13.13.39 Vibration Damper

The viscous vibration damper should be inspected periodically and replaced if dented or leaking. Heat from normal engine operation may, over a period of time, cause the fluid within the viscous vibration damper to break down and lose its dampering properties. For this reason, the viscous vibration damper must be replaced at time of normal major engine overhaul, regardless of apparent condition.

13.13.40 Alternator and Attaching Hardware

The alternator and attaching hardware should be inspected for cracks, and the securing bolts should be retorqued every 90,000 miles for on-highway vehicles, 900 hours for stationary and industrial applications, 600 hours for Gensets, and 1000 hours for Series 60G Gensets.

13.13.41 Air Conditioning and Attaching Hardware

The air conditioner and attaching hardware should be inspected for cracks, and the securing bolts should be retorqued every 90,000 miles for on-highway vehicles, and 900 hours for stationary and industrial applications.

13.13.42 Air Compressor and Attaching Hardware

The air compressor and attaching hardware should be inspected for cracks, and the securing bolts should be retorqued every 90,000 miles for on-highway vehicles, and 900 hours for Series 60G Gensets.

(Rev. 2004) *All information subject to change without notice.*
6SE483 0401 Copyright © 2004 DETROIT DIESEL CORPORATION

13.14 AIR SEPARATOR FILTER ELEMENT (MARINE)

The closed breather system consists of an air separator assembly mounted to the inlet side of the turbocharger. See Figure 13-16.

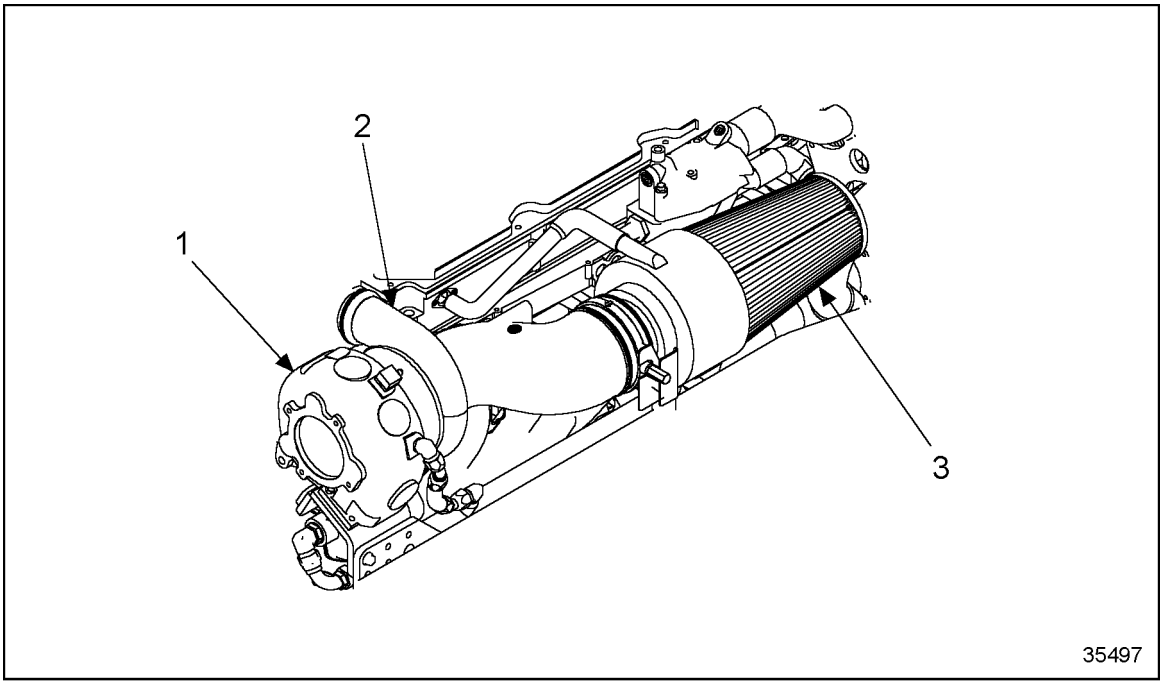

1. Turbine Housing
2. Compressor Housing
3. Air Separator Assembly

Figure 13-16 Typical Air Separator System

To operate efficiently, air separator filter and vacuum limiter must be properly maintained.

- ☐ Clean and oil the filter element and vacuum limiter every 250 hours of engine operation or once a year, whichever comes first. Refer to section 13.14.1, refer to section 13.14.2, and refer to section 13.14.4.

NOTE:
Filter element and vacuum limiter must also be cleaned and oiled any time the restriction gage shows red.

- ☐ Filter element must be replaced after three cleanings.
- ☐ Replace vacuum regulator/limiter every 1000 hours of engine operation or every two years, whichever comes first.

 Copyright © 2004 DETROIT DIESEL CORPORATION

NOTICE
Failure to properly clean the engine room may allow loose debris to plug air separator elements. Plugging can lead to high air inlet restriction, causing reduced engine performance and/or engine damage caused by engine overheating.

NOTE:
For best cleaning results, and to avoid damaging filter elements, Walker Cleaning and Re-oiling Kit must be used. This kit is available from Walker Engineering supply distributors or directly from manufacturer:

Walker Engineering Enterprises

8321 De Celis Place

North Hills, CA 91343

13.14.1 Pre-Clean Air Separator Filter Element

Perform the following procedures to clean and re-oil the air separator filter element:

NOTICE
Failure to clean the air separator filter element and the vacuum regulator/limiter will affect the operation of the air separator and may cause reduced engine performance and/or engine damage caused by engine overheating.

NOTE:
A filter that is damaged or clogged with soot due to an exhaust leak may not be able to be cleaned to maximum air flow condition. Replacement of element may be necessary.

1. Remove filter element from air separator by detaching the end cap. On some installations this is accomplished by removing the end cap bolt. Other installations require removal of the end cap attaching springs.

NOTE:
Filter elements and vacuum limiters must also be cleaned and oiled when the air inlet restrictions turns *red*. This indicates the maximum allowable system restriction has been reached.

2. Tap element to dislodge any large, imbedded particles of dirt.

(Rev. 2004) *All information subject to change without notice.*
6SE483 0401 Copyright © 2004 DETROIT DIESEL CORPORATION

3. Gently brush outside of element with soft bristle brush, such as a paint brush, to remove smaller particles of dirt.
   [a] If complete cleaning is impractical at this time, re-oil and install element. Refer to section 13.14.2 for oiling procedure.
   [b] If complete cleaning is practical at this time, refer to section 13.14.2and follow cleaning and oiling procedure.

13.14.2 Cleaning of Air Separator Filter Element

Perform the following procedures to clean air separator:

1. Spray Walker cleaning solution onto element and let soak 10 minutes.

NOTICE
To avoid filter damage, do not clean with gasoline, steam, high pressure water or air, caustic solutions, strong detergents, or parts cleaning solvents.

2. Rinse element with clean, low pressure, fresh (not salt) water. Rinse from clean side (inside) to dirty side.

NOTICE
To avoid filter damage, do not use compressed air, open flame, ovens, or heat dryers. Excess heat will shrink the filter element, and compressed air will blow holes through it.

3. Shake off excess water and allow element to dry naturally.

NOTICE
To avoid filter damage, do not use transmission fluid, motor oil, diesel fuel, WD-40® or other lightweight oil.

4. Squeeze Walker air filter fluid out of the bottle and across the top of each pleat. Make one pass per pleat.

NOTE:
Filter effectiveness is reduced if the element is used without re-oiling.

5. Allow oil to work into element for 20 minutes.
6. Re-oil any white spots on the element.
7. Install air separator filter element.

 Copyright © 2004 DETROIT DIESEL CORPORATION

13.14.3 Clean Vacuum Regulator Filter Element

The vacuum regulator filter can be cleaned without removing the regulator from the system.

1. Detach filter using a standard blade screwdriver.
2. Refer to section 13.14.1, and follow same pre-clean procedure.
3. Refer to section 13.14.2, and follow same cleaning procedure.

13.14.4 Clean Vacuum Limiter Filter Element

Clean vacuum limiter filter element as follows:

1. Remove entire vacuum limiter assembly. Do not detach filter element.
2. Refer to section 13.14.1, and follow same pre-clean procedure.
3. Refer to section 13.14.2, and follow same cleaning procedure.

(Rev. 2004) *All information subject to change without notice.*
6SE483 0401 Copyright © 2004 DETROIT DIESEL CORPORATION

13.15 DETECTING INTERNAL FUEL LEAKS

Used lube oil analysis can identify a potential source of engine trouble before it occurs. A program such as the Detroit Diesel Oil Analysis Program is recommended for monitoring crankcase oil in all engines. One of the most serious conditions used oil analysis can uncover is the presence of excessive fuel in the lube oil which should not exceed 2.5% maximum of oil volume, reference Detroit Diesel's Publication 7SE270 “Engine Requirements for Lubricating Oil, Fuel and Filters.” While used oil analysis can uncover the presence of excessive fuel in the lube oil, other methods must be used to determine its source. Three particularly effective tests involve the use of special test fuel containing dye additives , the J 37050-A , (on engine) Injector Pop tester, and the J 34760-A Injector Pop-N-Fixture with the J 34760-147A adaptor.

13.15.1 Prepare Test Fuel

The use of J 28431-B Fluorescent dye is effective in fuel leak detection and should be the technician's choice in preparing a test fuel mixture. However, if a “Black light“ or fluorescent dye are not available, red LTO 1140 may be substituted.

Prepare Fluorescent Dye J 28431-B as follows:

- ☐ Mix 118 ml (four ounces) of fluorescent dye additive with 15.1 liters (four gallons) of diesel fuel in a clean container marked with the words “Test Fuel”.

Prepare Red LTO 1140 as follows:

- ☐ Mix 59 ml (two ounces) of Red LTO 1140 dye additive with 18.9 liters (five gallons) of diesel fuel in a clean container marked with the words “Test Fuel”.

13.15.2 Fuel Leak Tests (Injectors Installed/Engine Off)

To locate a leaking injector the tests below should be completed in the sequence indicated and stopped at a point when the leaking injector is diagnosed. If a leaking injector is found, do not arbitrarily replace more than that injector, as multiple injector malfunctions are rare on the same engine. Multiple injector returns under WARRANTY will require verification by the servicing outlet using the J 34760-A Pop-N-Fixture.

 Copyright © 2004 DETROIT DIESEL CORPORATION

NOTICE:

During fuel pressure testing (engine off, 5 minutes at 50 psi) fuel leakage will be evident at the injector body/plunger spring seat area see Figure 13-17. Factory tests have shown that accumulation of fuel at each injector, approximately a tablespoon may be evident during these tests. Evidence of fuel in this area is expected, as there is no other place for it to go when the injector cavities are pressurized, forcing fuel between the injector body and plunger.

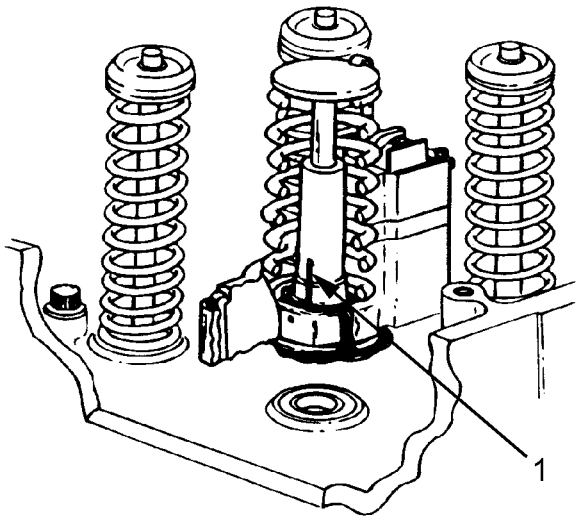

1. Acceptable Fuel Leakage

Figure 13-17 Acceptable-Fuel Leakage Between injector Plunger and Body

13.15.3 Fuel Pressure Test

Since there is no known fuel leak tester available in the commercial market today, one must be fabricated. Use the following guidelines to help in fabricating:

- ☐ Although test fuel can be pressurized by variety of methods, Detroit Diesel recommends an air/fuel accumulator design capable of safely withstanding a minimum pressure of 345 kPa (50 psi).
- ☐ The tester should have a capacity of 9.5 liters (2.5 gallons) of test fuel and provide for contamination free storage of the test fuel when not in use.
- ☐ **Regulated** shop air may be used to charge the accumulator tank and maintain a constant test fuel pressure.
- ☐ A shut-off valve should be installed at the accumulator outlet to start and stop pressurization during the test sequence.

(Rev. 2004) *All information subject to change without notice.*
6SE483 0401 Copyright © 2004 DETROIT DIESEL CORPORATION

CAUTION:

To avoid injury from the sudden release of a high-pressure hose connection, wear a face shield or goggles.

CAUTION:

To avoid injury from tank rupture or a sudden air hose failure, do not use unregulated air pressure or an accumulator tank with an inadequate pressure rating.

Fuel Leak Tester

1. Fill fuel system tester with the fluorescent or red dye fuel mixture approximately 9.5 liters (2.5 gallons).
2. Charge tester (outlet valve closed) with shop air **regulated** at 50 psi (345 kPA).

Tester hook-up to engine fuel system.

There are two options for fuel tester to engine hook-up as determined by the ease of access.

- ☐ Option 1–Remove the fuel line from the outlet side of the fuel pump and connect the fuel system testers line in this fuel hose fitting. This hook-up location will require the fuel system shut-off valve to remain in the **open** position during testing. About 3.8 liters (1 gallon) of test fuel will be necessary to charge the engine's fuel system from this hook-up location. Test fuel will not harm the engine's fuel filters and may remain in the fuel system at the conclusion of testing.
- ☐ Option 2–Remove the fuel line from the outlet side of the fuel by-pass filter adapter and connect the fuel testers line in this fuel hose fitting. It is recommended that the fuel system shut-off valve be placed in the **closed** position before removing the engine fuel line and remain **closed** until reinstalled. About 1.9 liter (0.5 gallon) of test fuel will be necessary to charge the engine's fuel system from this hook-up location.

3. Remove rocker cover and disconnect the fuel outlet line at a convenient location between the cylinder head and the fuel tank. Install an appropriate size pipe plug (loose) in the fuel outlet line end and place it in a container to catch the fuel while priming the cylinder head. If equipped, Jake Brakes® should be removed to allow for the visual examination of the injectors during fuel leak testing and if necessary on-engine injector 'Pop' test.
4. Slowly open the fuel tester's shut-off valve and charge the cylinder head fuel galley. When test fuel is flowing from the fuel return line and air has been purged from the system, tighten the pipe plug at the engine fuel outlet line fitting.
5. With the fuel tester shut-off valve completely open and the cylinder head galley pressurized to 345 kPa (50 psi), visually monitor the overhead using a black light for five minutes if the test time goes beyond five minutes it will become more difficult to determine the faulty injector due to expected leakage at the injector plunger/body. Pay special attention to any leaks at the injector body, high and low pressure body

 Copyright © 2004 DETROIT DIESEL CORPORATION

plugs, see Figure 13-18and see Figure 13-20, injector nut to body and nut to tube seals see Figure 13-19, and stop valve cover see Figure 13-21.

NOTICE:
Injector plunger/body leakage at the follower spring area is normal and expected during this test.

NOTICE:
The figures that follow do not illustrate amount of fuel leakage but rather its origin or location. If injector(s) are removed and reinstalled in the head, the injector nut 'O' ring seals should be replaced with new parts.

NOTICE:
If pressurization testing does not reveal the leaking injector, proceed to section **Injector 'Pop' test (On Engine) with J 37050–A.**

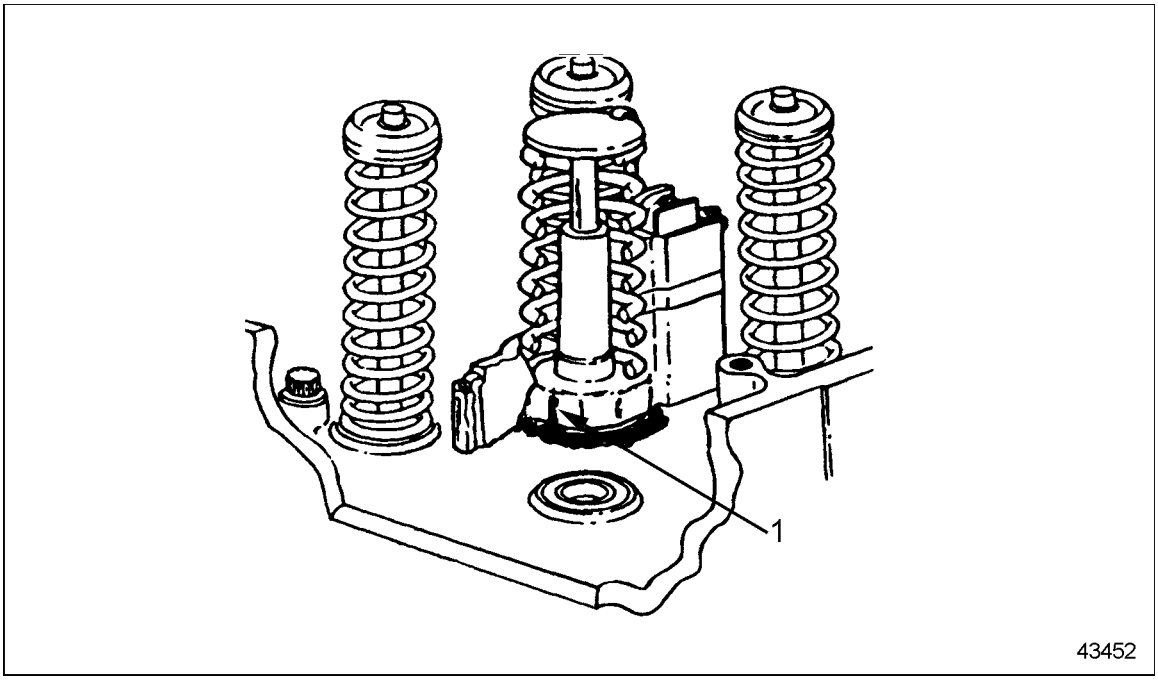

1. Fuel Leakage at Low Pressure Body Plug

Figure 13-18 Unacceptable-Fuel Leakage at Low Pressure Body Plug

(Rev. 2004) *All information subject to change without notice.*
6SE483 0401 Copyright © 2004 DETROIT DIESEL CORPORATION

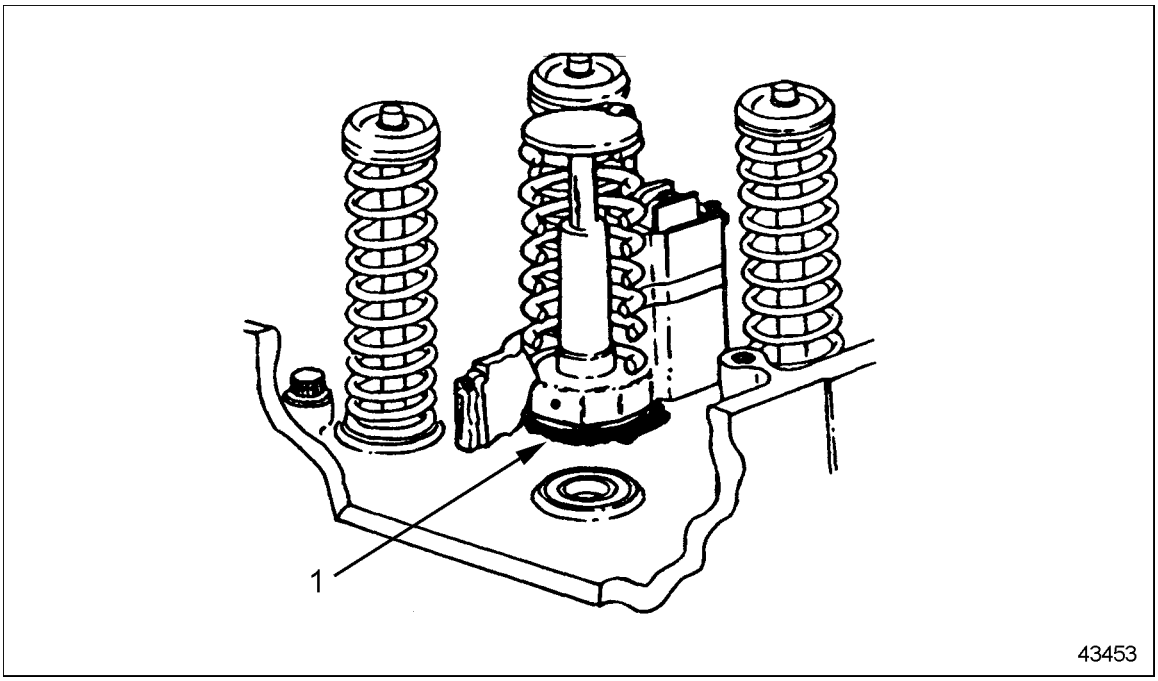

1. Fuel Leakage at Injector Nut-to-Tube 'O' Ring Seal

Figure 13-19 Unacceptable-Fuel Leakage at Injector Nut-toTube 'O' Ring Seal

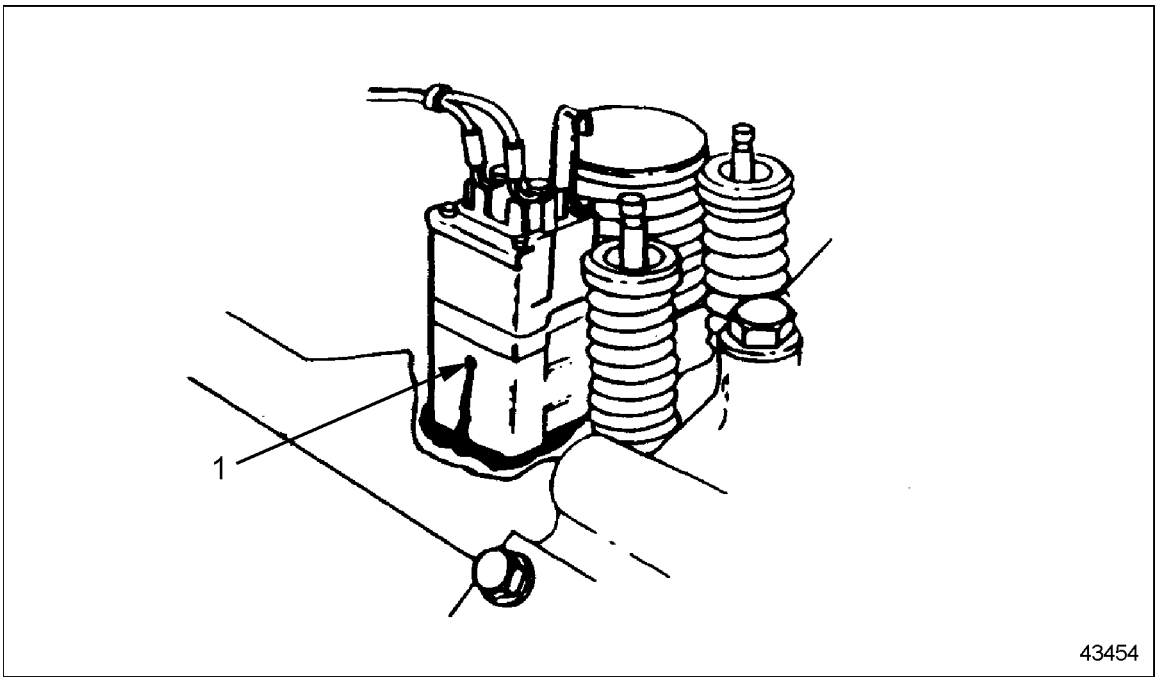

1. Fuel Leakage at High Pressure Body Plug and or Body Crack

Figure 13-20 Unacceptable-Fuel Leakage at High Pressure Body Plug and or Body Crack

 Copyright © 2004 DETROIT DIESEL CORPORATION

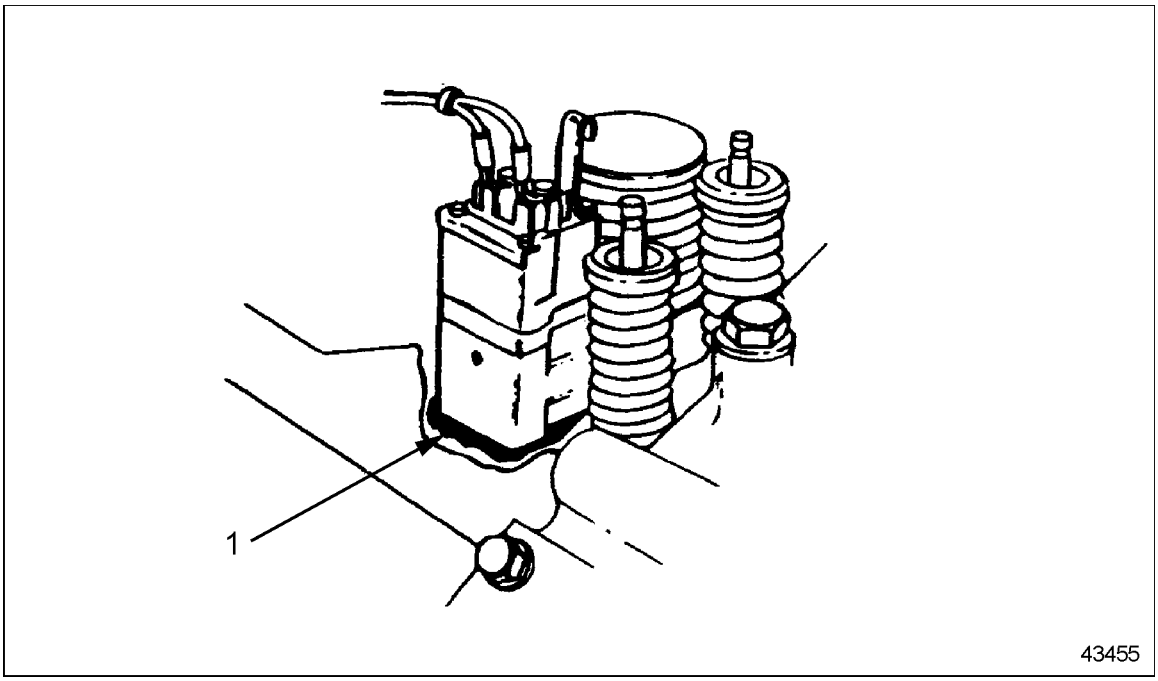

1. Fuel Leakage at Injector Stop Valve Cover

Figure 13-21 Unacceptable-Fuel Leakage at Injector Stop Valve Cover

6. Correct the cause of any abnormal fuel leaks.
7. Bleed the pressure from the accumulator tank and remove the pipe plug from the fuel outlet line. Reinstall the fuel outlet line in the engine's fuel system. Disconnect the fuel tester and reinstall the fuel inlet line in the engine's fuel system.
8. Completely open the engine's fuel shut-off valve and assure that all fuel connections are tight. Reinstall the rocker cover and start engine to purge the air from the fuel system. If the engine fails to start, it may be necessary to prime the fuel system.

13.15.4 Injector 'Pop Test (On Engine) With J 37050-A

Perform this test if injector leakage cannot be identified after pressure testing the cylinder head. Energizing and stoking the suspect injector(s) will produce the internal fuel pressures created during engine operation, thus increasing any abnormal fuel leakage. Refer to manufacture's instructions supplied with the J 37050-A tester for set-up procedure.

Perform the following steps for the Injector Pop Test.

1. Wipe down the overhead to remove any test fuel generated from previous testing.
2. Disconnect both 5-way injector harness connectors at the ECM.
3. Connect alligator clips from the tester cable to the EUI. It is not necessary to disconnect the solenoid terminal leads from the EUI engine wiring harness if the 5-way injector harness connectors have been removed from the ECM.

(Rev. 2004) *All information subject to change without notice.*
6SE483 0401 Copyright © 2004 DETROIT DIESEL CORPORATION

4. Connect power supply clips to the vehicles 12 volt battery. **Red to Positive(+) and Black to Negative(-).**
5. Option 1–Connect remote starter cable to the vehicle starter motor.
6. Option 2–Operate vehicle starter switch from drivers seat in the cab.
7. Depress and hold trigger on tester's pistol grip start button while rotating 'current' control knob clockwise to increase current to the injector solenoid.

NOTICE:
The Letter **'O'** at the left side of the LED amps readout window indicates the injector solenoid is **OPEN, 'C'** indicates **CLOSED**. The pistol grip trigger must be released and depressed for each time the injector solenoid is activated.

⚠ CAUTION:
To avoid injury before starting and running the engine, ensure the vehicle is parked on a level surface, parking brake is set, and the wheels are blocked.

8. Using the vehicle starter, motor the engine while energizing the injector solenoid. It should only be necessary to cycle the solenoid once or twice to pressurize the injector. Energize only one injector at a time.

NOTICE:
While activating the injector solenoid, cylinder detonation may occur when motoring the engine. This occurrence will not harm the engine. It should be noted again that if the 5-way injector connectors are not disconnected at the ECM, the engine may start.

9. With the vehicle start switch in the **OFF** position remote or starter cable disabled, visually examine each suspect injector for abnormal fuel leakage using a “black light” or look for evidence of red dye if LTO test fuel is used.
10. Repeat the above procedure for each injector being tested.
11. Correct the cause of any abnormal fuel leakage.
12. Refer to **Fuel Leak Tester**, instruction items 7 and 8.

 Copyright © 2004 DETROIT DIESEL CORPORATION

13.15.5 Injector Bench Test with J 34760-A Pop-N-Fixture

If multiple injectors are removed for fuel leakage, each should be bench tested using the J 34760-A Pop-N-Fixture. Fuel leakage may be more easily observed while performing this bench test. Refer to manufacture's instructions supplied with the J 34760-A Pop-N-Fixture for set-up and test procedures.

Wash, wipe down and allow injector to dry before mounting in test fixture. Fuel leakage will be more recognizable by adding fluorescent dye to the fixture's fuel reservoir and using a “black light” to examine the injector during testing.

(Rev. 2004) *All information subject to change without notice.*
6SE483 0401 Copyright © 2004 DETROIT DIESEL CORPORATION

13.16 CLEANING CONTAMINATED LUBRICATION OIL SYSTEM

If coolant should leak into the lubrication system, the lube system *must* be thoroughly flushed to avoid or limit damage using the flushing procedures outlined below.

13.16.1 Before Flushing Lubrication System

The following steps must be followed before flushing the contaminated lubrication system:

1. Determine the cause of the internal coolant leak and correct the problem.
2. Thoroughly drain the lubricating oil. Take and label a representative 6-8 ounce sample for chemical analysis.
3. Examine the drained oil:
   [a] Refer to section13.16.2 if the oil is still reasonably fluid and is typical of the used oil at regular drain intervals.
   [b] Refer to section13.16.3 if the oil shows a gelling texture.
4. Inspect main bearing shells:
   [a] If damaged, the engine must be disassembled and checked for any additional damage.
   [b] If not damaged, proceed as follows:
   - Refer to section13.16.2 if the oil on the bearing shell(s) is viscous with normal flowing texture
   - Refer to section13.16.3 if the oil on the bearing shell(s) has gelled up, requiring scraping to remove.

 Copyright © 2004 DETROIT DIESEL CORPORATION

13.16.2 Flushing a Non-Gelled Oil System

Use this procedure if the contaminated lubricating oil is still freely flowing without gelling. This requires the lubricating oil recommended for normal operation.

CAUTION:

To avoid injury from fire caused by heated lubricating-oil vapors:

- ☐ **Keep those people who are not directly involved in servicing away from the engine.**
- ☐ **Stop the engine immediately if an oil leak is detected.**
- ☐ **Do not allow open flames or smoke when working on an operating engine.**
- ☐ **Wear adequate protective clothing (face shield, insulated gloves, apron, etc.) to avoid burns.**
- ☐ **To prevent a buildup of potentially volatile vapors, keep the engine area well ventilated during operation.**

Lubricating oil is relatively harmless at ambient temperatures.

1. Remove and discard the oil filter and replace with new filters.
2. Pressure fill the lubricating system to 25 psi (172 kPa) with the lubricating oil recommended for normal operation, making sure the crankcase is filled to the proper operating level. Refer to section5.2 of the engine service manual.

CAUTION:

Diesel engine exhaust and some of its constituents are known to the State of California to cause cancer, birth defects, and other reproductive harm.

- ☐ **Always start and operate an engine in a well ventilated area.**
- ☐ **If operating an engine in an enclosed area, vent the exhaust to the outside.**
- ☐ **Do not modify or tamper with the exhaust system or emission control system.**

3. Start and run the engine at fast idle (1000 to 1200 rpm) for 30 minutes to one hour. Check engine running conditions frequently, especially the oil pressure, and stop immediately if a reading is out of range.

(Rev. 2004) *All information subject to change without notice.*
6SE483 0401 Copyright © 2004 DETROIT DIESEL CORPORATION

4. Stop the engine and immediately drain the crankcase. Allow enough time to drain all the fluid. Take and label a second oil sample.
5. Repeat steps 1through step 4.
6. Remove and discard all oil filters and replace with new filters.
7. Replace oil drain plugs and pressure fill the engine to the proper level with the lubricating oil recommended for normal operation.
8. Have oil samples analyzed for coolant contamination and condition of the engine.

13.16.3 Flushing an Oil System that Exhibits Gelling

Use this procedure if the contaminated oil exhibits gelling. This requires the lubricating oil recommended for normal operation and the addition of a solvent.

CAUTION:

To avoid injury from fire caused by heated lubricating-oil vapors:

- ☐ **Keep those people who are not directly involved in servicing away from the engine.**
- ☐ **Stop the engine immediately if an oil leak is detected.**
- ☐ **Do not allow open flames or smoke when working on an operating engine.**
- ☐ **Wear adequate protective clothing (face shield, insulated gloves, apron, etc.) to avoid burns.**
- ☐ **To prevent a buildup of potentially volatile vapors, keep the engine area well ventilated during operation.**

Lubricating oil is relatively harmless at ambient temperatures.

1. Remove and discard all oil filters and replace with new filters.

CAUTION:

To avoid injury from improper use of chemicals, follow the chemical manufacturer's usage, handling, and disposal instructions. Observe all manufacturer's cautions.

2. Mix two parts of the lubricating oil recommended for normal operation with one part of butyl cellosolve. Refer to section 5.2 of the service manual for recommended oil. Pressure fill the engine with this mixture to 25 psi (172 kPa) until the crankcase is filled to the proper operating level.

 Copyright © 2004 DETROIT DIESEL CORPORATION

3. Refer to section13.16.2 for exhaust caution before preceding. Start and run the engine at fast idle (1000 to 1200 rpm) for 30 minutes to one hour. Check engine running conditions frequently, especially oil pressure, and stop immediately if a reading is out of range.
4. Stop the engine and immediately drain the crankcase. Allow enough time to drain all the fluid. Take and label a second oil sample.
5. Remove and discard all oil filters and replace with new filters.
6. Using a fresh charge of the lubricating oil recommended for normal operation, pressure fill the engine via the oil gallery to 25 psi (172 kPa) until the crankcase is filled to the proper operating level.
7. Refer to section13.16.2 for the exhaust caution before preceding. Start and run the engine at fast idle (1000 to 1200 rpm) for 30 minutes to one hour. Check engine running conditions frequently, especially oil pressure, and stop immediately if a reading is out of range.
8. Stop the engine and immediately drain the crankcase. Allow enough time to drain all the fluid. Take and label a third oil sample.
9. Remove and discard all oil filters and replace with new filters.
10. Replace oil drain plugs and pressure fill the engine to the proper level with the lubricating oil recommended for normal operation.
11. Have oil samples analyzed for coolant contamination and condition of the engine.

This procedure should flush all coolant contamination from the lubrication system. However, a thin coating from the coolant may still be evident on certain moving engine parts. This coating should disappear within one or two oil changes due to the detergent and dispersant additives in the engine oil.

NOTE:
The next oil change should be at one-half the normal oil change interval. Make sure that new filters are installed and that an oil sample is analyzed for coolant contamination and condition of the engine.

(Rev. 2004) *All information subject to change without notice.*
6SE483 0401 Copyright © 2004 DETROIT DIESEL CORPORATION

14 STORAGE

Section		Page
14.1	PREPARING ENGINE FOR STORAGE	14-3
14.2	RESTORING AN EXTENDED STORAGE ENGINE	14-10
14.3	WINTER STORAGE FOR MARINE ENGINE	14-14

(Rev. 2004) *All information subject to change without notice.*
6SE483 0401 Copyright © 2004 DETROIT DIESEL CORPORATION

14.1 PREPARING ENGINE FOR STORAGE

When an engine is to be stored or removed from operation for a period of time, special precautions should be taken to protect the interior and exterior of the engine, transmission and other parts from rust accumulation and corrosion. The parts requiring attention and the recommended preparations are given below:

- ☐ It will be necessary to remove all rust or corrosion completely from any exposed part before applying rust preventive compound. Therefore, it is recommended that the engine be processed for storage as soon as possible after removal from operation.
- ☐ The engine should be stored in a building that is dry and can be heated during the winter months. Moisture absorbing chemicals are available commercially for use when excessive dampness prevails in the storage area.

 Copyright © 2004 DETROIT DIESEL CORPORATION

14.1.1 Temporary Storage (30 Days or Less)

To protect an engine for a temporary period of 30 days or less, proceed as follows:

1. Drain the engine crankcase. Refer to section 13.13.1.
2. Fill the crankcase to the proper level with the recommended viscosity and grade of oil, listed in Table 14-2.
3. Fill the fuel tank with the recommended grade of fuel oil, listed in Table 14-3. Operate the engine for two minutes at 1200 r/min and no load.

NOTE:
Do not drain the fuel system or the crankcase after this run.

4. Check the air cleaner and service it, if necessary. Refer to OEM guidelines.
5. If freezing weather is expected during the temporary storage period, add an ethylene glycol base antifreeze solution to the cooling system in accordance with the manufacturer's recommendations. Otherwise, the coolant system should be flushed and filled with a good rust inhibitor to prevent rusting of the outside diameter of the cylinder liners. Refer to section 13.13.4.
6. Remove electrical components. Refer to section 8.

CAUTION:

To avoid injury from flying debris when using compressed air, wear adequate eye protection (face shield or safety goggles) and do not exceed 40 psi (276 kPa) air pressure.

7. Clean the engine exterior with fuel oil and dry the engine with compressed air.
8. Seal all of the engine openings with a material used for this purpose. The material used for sealing must be waterproof, vapor proof and possess sufficient physical strength to resist puncture and damage from the expansion of entrapped air.

(Rev. 2004) *All information subject to change without notice.*
6SE483 0401 Copyright © 2004 DETROIT DIESEL CORPORATION

14.1.2 Restoring a Temporarily Stored Engine

An engine that was stored in accordance with DDC guidelines can be returned to service in a short time by removing the seals at the engine openings and by checking the engine coolant, fuel oil, lubricating oil and transmission oil levels. Refer to section 14.1.1.

14.1.3 Extended Storage (More Than 30 Days)

To prepare an engine for extended storage (more than 30 days), follow this procedure:

1. Drain the cooling system. Refer to section 13.13.4.
2. Flush with clean, soft water. Refer to section 13.13.4.
3. Refill with clean, soft water and add a rust inhibitor to the cooling system. Refer to section 5.4.
4. Circulate the coolant by operating the engine until normal operating temperature is reached, listed in Table 14-1.

Cooling System Parameters	Normal Range for2100 r/min Operation	Normal Range for1800 r/min Operation
Coolant temperature normal - °C (°F)	88 (190)	88 (190)
Coolant inlet restriction, maximum - kPa (in. Hg)	0.0 (0.0)	0.0 (0.0)
Engine coolant capacity - liters (quarts)	23 (24)	23 (24)
Minimum pressure cap - kPa (lb/in.^{2})	48.3 (7)	48.3 (7)
Maximum top tank temperature - °C (°F)	99 (210)	99 (210)
Minimum top tank temperature - °C (°F)	71 (160)	71 (160)
Thermostats start to open - °C (°F)	88 (190)	88 (190)
Thermostats are fully open - °C (°F)	96 (205)	96 (205)

Table 14-1 Series 60 Operating Conditions

5. Stop the engine.
6. Remove the drain plug to drain the engine crankcase. Refer to section 13.13.1.
7. Install and torque the 3/4 in.-14 square, magnetic oil drain plug to 45-56 N·m (33-41 lb·ft).
8. Install new lubricating oil filters. Refer to section 13.13.1.
9. Fill the crankcase to the proper level with Tectyl® 390A preservative lubricating oil or an equivalent 30-weight preservative lubricating oil meeting MIL-L-21260C, Grade 2 specification.
10. Drain the fuel tank. Refer to section 13.13.2.

 Copyright © 2004 DETROIT DIESEL CORPORATION

11. Refill with enough clean No. 1 diesel fuel or pure kerosene to permit the engine to operate for about ten minutes. If it is not convenient to refill the fuel tank, use a separate, portable supply of recommended fuel.

NOTE:
If engines in vehicles are stored where condensation of water in the fuel tank may be a problem, supplemental additives containing methyl carbitol or butyl cellusolve are effective. Follow the manufacturer's instructions for their use. The use of isopropyl alcohol is no longer recommended due to its negative effect on fuel lubricity.

NOTE:
In environments where microbe growth is a problem, a fungicide such as Biobor® JF (or equivalent) may be used. Biobor® is a registered trademark of United States Borax and Chemical Corp. Microbial activity may be confirmed with commercially available test kits. Follow the manufacturer's instructions for treatment. Avoid the use of fungicides containing halogenated compounds, since these may cause fuel system corrosion.

12. Drain the fuel system. Refer to section 13.13.2.
13. Remove the fuel filters. Refer to section 13.13.14.
14. Install new filters with No. 1 diesel fuel or pure kerosene. Refer to section 13.13.14.
15. Operate the engine for five minutes to circulate the clean fuel oil throughout the engine. Ensure the engine fuel system is full.
16. Disconnect the fuel return line and the inlet line at the primary filter and securely plug both to retain the fuel in the engine.
17. Service the air cleaner. Refer to section 13.13.12.
18. To prepare the transmission, power take-off and turbocharger:
    [a] Follow OEM recommendations for prolonged storage to store the transmission.
    [b] Follow OEM recommendations for prolonged storage to store the power take-off.
    [c] Since turbocharger bearings are pressure lubricated through the external oil line leading from the oil filter adaptor while the engine is operating, no further attention is required. However, the turbocharger air inlet and turbine outlet connections should be sealed off with moisture resistant tape.

NOTICE:
Do not apply oil, grease or any wax base compound to the flywheel. The cast iron will absorb these substances, which can sweat out during operation and cause the clutch to slip.

19. Apply a non-friction rust preventive compound to all exposed engine parts. If convenient, apply the rust preventive compound to the engine flywheel. If not, disengage the clutch mechanism to prevent the clutch disc from sticking to the flywheel.

(Rev. 2004) *All information subject to change without notice.*
6SE483 0401 Copyright © 2004 DETROIT DIESEL CORPORATION

NOTICE:

Incomplete draining of the water pump may result in rusting of the impeller to the pump body during extended engine storage, especially if inadequate inhibitor was used in the remaining coolant. Damage from freezing temperatures may occur if the coolant remaining in the engine has insufficient antifreeze to prevent it from freezing and expanding. To ensure complete pump drainage, always remove the drain plug from the bottom of the pump before extended storage. If a coolant filter/inhibitor system hose is attached to the bottom of the pump, disconnect the hose and allow the pump to drain completely. Open the drain cock at the bottom of the filter. Do not reinstall the pump drain plug or filter hose or retighten the filter drain plug until the engine is put back into service.

20. Drain the engine cooling system. Refer to section 13.13.4.
21. Drain the preservative oil from the engine crankcase. Reinstall and torque the 3/4 in.-14 square, magnetic drain plug to 45-56 N·m (33-41 lb·ft).
22. Remove and clean the battery and battery cables with a baking soda-water solution and rinse with fresh water. Do not allow the soda solution to enter the battery.
23. Add distilled water to the electrolyte (if necessary) and fully charge the battery.

NOTICE:

To avoid possible battery damage caused by freezing, never store a battery in a place below 0°C (32°F).

24. Store the battery in a cool, dry place. Keep the battery fully charged and check the level and specific gravity of the electrolyte regularly.
25. Insert heavy paper strips between the pulleys and drive belts to prevent sticking.
26. Seal all engine openings including the exhaust outlet, with moisture resistant tape. Use cardboard, plywood or metal covers where practical.
27. Clean and dry the exterior painted surfaces of the engine and spray with a suitable liquid automobile body wax, a synthetic resin varnish or a rust preventive compound.
28. Protect the engine with a good weather-resistant tarpaulin and store it under cover, preferably in a dry building which can be heated during the winter months.

NOTE:
Plastic may be used for indoor storage.

 Copyright © 2004 DETROIT DIESEL CORPORATION

14.1.4 Marine Gear Storage (More than 30 Days)

Prepare marine gear for extended storage as follows:

1. Drain the oil completely, and refill with clean oil of the recommended grade and viscosity.
2. Remove and clean or replace the strainer and filter elements.

⚠ CAUTION:

Diesel engine exhaust and some of its constituents are known to the State of California to cause cancer, birth defects, and other reproductive harm.

- ☐ **Always start and operate an engine in a well ventilated area.**
- ☐ **If operating an engine in an enclosed area, vent the exhaust to the outside.**
- ☐ **Do not modify or tamper with the exhaust system or emission control system.**

3. Start and run the engine at 600 r/min. for 10 minutes to coat all internal parts of the marine gear with clean oil.
4. Engage the clutches alternately to circulate clean oil through all moving parts.

14.1.5 Outdoor Storage (30 Days or Less)

In some cases outdoor storage may be unavoidable.

NOTE:
Outdoor storage of engines is not recommended.

NOTICE:

Do NOT use plastic sheeting for outdoor storage. Plastic is fine for indoor storage. When used outdoors, however, enough moisture can condense on the inside of the plastic to rust ferrous metal surfaces and pit aluminum surfaces. If a unit is stored outside for any extended period of time, severe corrosion damage can result.

If units must be kept out-of-doors, protect these units with quality, weather-resistant tarpaulins (or other suitable covers) arranged to provide for air circulation.

The stored engine should be inspected periodically. If there are any indications of rust or corrosion, corrective steps must be taken to prevent damage to the engine parts.

(Rev. 2004) *All information subject to change without notice.*
6SE483 0401 Copyright © 2004 DETROIT DIESEL CORPORATION

14.1.6 Outdoor Storage (More Than 30 Days)

In some cases outdoor storage may be unavoidable.

NOTE:
Outdoor storage of engines is not recommended.

If units must be kept out-of-doors. Refer to section 14.1.5.

NOTICE:
Do NOT use plastic sheeting for outdoor storage. Plastic is fine for indoor storage. When used outdoors, however, enough moisture can condense on the inside of the plastic to rust ferrous metal surfaces and pit aluminum surfaces. If a unit is stored outside for any extended period of time, severe corrosion damage can result.

Protect these units with quality, weather-resistant tarpaulins (or other suitable covers) arranged to provide for air circulation.

The stored engine should be inspected periodically. If there are any indications of rust or corrosion, corrective steps must be taken to prevent damage to the engine parts. Perform a complete inspection at the end of one year and apply additional treatment as required.

 Copyright © 2004 DETROIT DIESEL CORPORATION

14.2 RESTORING AN EXTENDED STORAGE ENGINE

Use the following procedure to restore an engine that has been in extended storage.

1. Remove the covers and tape from all of the openings of the engine, fuel tank and electrical equipment. Do not overlook the exhaust outlet.
2. Remove the plugs from the inlet and outlet fuel lines and connect the lines to their proper position.
3. Wash the exterior of the engine with fuel oil to remove the rust preventive. (Do NOT wash electrical components.)
4. Remove the rust preventive from the flywheel.
5. Remove the paper strips from between the pulleys and drive belts.
6. Fill the crankcase to the proper level, with the recommended grade of lubricating oil listed in Table 14-2. Use a pressure lubricator to insure all bearings and rocker shafts are oiled.

Specification	Recommendation
SAE Viscosity Grade	15W-40
API Classification	CH - 4
Military Specification	MIL-L-2104E
HT/HS Viscosity	3.7 cP (minimum)

Table 14-2 Recommended Engine Oil

(Rev. 2004) *All information subject to change without notice.*
6SE483 0401 Copyright © 2004 DETROIT DIESEL CORPORATION

7. Fill the fuel tank to specifications listed in Table 14-3.

General Fuel Classification	ASTM Test	No. 1 ASTM 1-D	No. 2 ASTM 2-D
Gravity, ° API (Not Specified in ASTM D 975)	D 287	40 - 44	33 - 37
Flash Point, Minimum - °F (°C)	D 93	100 (38)	125 (52)
Viscosity, Kinematic - cSt @ 100°F (40°C)	D 445	1.3 - 2.4	1.9 - 4.1
Cloud Point (Not Specified in ASTM D 975)	D 2500	‡	‡
Sulfur Content, Maximum - wt%	D 129	0.05* (0.5 †)	0.05* (0.5 †)
Carbon Residue on 10%, Maximum - wt%,	D 524	0.15	0.35
Accelerated Stability, Total Insolubles, Maximum - mg/100 mL	D 2274	1.5	1.5
Ash, Maximum - wt %	D 482	0.01	0.01
Cetane Number, Minimum(Differs from ASTM D 975)	D 613	45	45
Distillation Temperature, °F (°C)	ASTM Test	No. 1 ASTM 1-D	No. 2 ASTM 2-D
IBP, Typical (Not Specified in ASTM D 975)	D 86	350 (177)	375 (191)
10% Typical (Not Specified in ASTM D 975)	D 86	385 (196)	430 (221)
50% Typical (Not Specified in ASTM D 975)	D 86	425 (218)	510 (256)
90% Maximum (Differs from ASTM D 975)	D 86	500 (260)	625 (329)
End Point, Maximum (Not Specified in ASTM D 975)	D 86	550 (288)	675 (357)
Water & Sediment, Maximum wt%	D 1796	0.05	0.05

* U.S. on-highway requirement.

† Non-domestic and off-highway applications only.

‡ The cloud point should be 10°F (-12°C) below the lowest expected fuel temperature to prevent clogging of fuel filters by crystals.

Table 14-3 Fuel Oil Selection Chart

 Copyright © 2004 DETROIT DIESEL CORPORATION

8. Close all of the drain cocks and fill the engine cooling system with clean soft water and proper inhibitors. Refer to section 5.4. If the engine is to be exposed to freezing temperatures, fill the cooling system with an ethylene glycol base antifreeze solution. Refer to section 13.13.4.
9. Install and connect the battery. Ensure that the average specific gravity of the battery is 1.265 or higher. Charge the battery if necessary.
10. Perform the following steps for proper air cleaner restoration:
    [a] Keep the air cleaner housing tight on the air intake pipe.
    [b] Ensure the correct filter replacement is used.
    [c] Keep the air cleaner properly assembled so the joints are strictly airtight.
    [d] Repair any damage to the air cleaner or related parts immediately.
    [e] Inspect and clean or replace the air cleaner elements as operating conditions warrant.
    [f] Carefully inspect the entire system periodically. Enough dust-laden air will pass through an almost invisible crack or opening to eventually cause damage to an engine.

CAUTION:

To avoid injury from flying debris when using compressed air, wear adequate eye protection (face shield or safety goggles) and do not exceed 40 psi (276 kPa) air pressure.

    [g] If a foam or fabric air cleaner element soaked with sticky dirt-holding substance was previously installed, check for the presence of coated engine components. Remove and clean them with a suitable solvent, as required, and blow dry with compressed air.
11. Follow OEM recommendations covering the return of the transmission to service.
12. Follow OEM recommendations covering the return of the power take-off to service.
13. Remove the covers from the turbocharger air inlet and turbine outlet connections. Pre-lube the turbocharger.

(Rev. 2004) *All information subject to change without notice.*
6SE483 0401 Copyright © 2004 DETROIT DIESEL CORPORATION

⚠ CAUTION:

Diesel engine exhaust and some of its constituents are known to the State of California to cause cancer, birth defects, and other reproductive harm.

- ☐ **Always start and operate an engine in a well ventilated area.**
- ☐ **If operating an engine in an enclosed area, vent the exhaust to the outside.**
- ☐ **Do not modify or tamper with the exhaust system or emission control system.**

14. After all of the preparations have been completed, start the engine. The small amount of rust preventive compound which remains in the fuel system will cause smoky exhaust for a few minutes.

NOTE:
Before subjecting the engine to a load or high speed, it is advisable to allow the engine to reach normal operating temperature. Then, monitor the DDEC Diagnostic Data Link for trouble codes. Refer to the *Detroit Diesel Single ECM Troubleshooting Manual,* (6SE497).

14.2.1 Restore Marine Gear (More than 30 Days)

Restore marine gear from extended storage as follows:

1. Inspect the marine gear oil cooler and coolant hoses, ensure that they are secure.
2. Refill gear case to the proper level, as necessary, with the correct grade of lubricating oil.

 Copyright © 2004 DETROIT DIESEL CORPORATION

14.3 WINTER STORAGE FOR MARINE ENGINE

When an engine is to be stored or removed from operation for a period of time, special precautions should be taken to protect the interior and exterior of the engine, marine gear, and other parts from rust accumulation and corrosion. The parts requiring attention and the recommended preparations are given below.

It will be necessary to remove all rust or corrosion completely from any exposed part before applying rust preventive compound. Therefore, it is recommended that the engine be processed for storage as soon as possible after removal from operation.

The engine should be stored in a building that is dry and can be heated during the winter months. Where this is not practical, moisture absorbing chemicals are available commercially for use when excessive dampness prevails in the storage area.

14.3.1 Store Marine Engine for Winter

Store the marine engine for winter as follows:

1. Prepare marine cooling system for winter storage as follows:

   [a] Check the protection of the antifreeze. The solution of ethylene glycol-base permanent antifreeze should be sufficient to protect your engine from freeze-up during the coldest part of winter. The maximum ratio of antifreeze compared to water, used in high performance engines, should not exceed 50% antifreeze and 50% water.

NOTE:
An excessive amount of antifreeze adversely affects freeze protection and heat transfer rates.

   [b] A non-chromate inhibitor is recommended for additional corrosion protection. Inhibitor level should be checked in accordance with manufacturer's procedures every 150 hours.

   [c] Check all hoses and hose clamps. Worn hoses should be replaced.

   [d] It is recommended that the cooling system be cleaned every 1,000 hours or four years.

   [e] A good radiator cleaning compound should be used according to the instructions on the container.

   [f] After the cleaning operation, rinse the cooling system thoroughly with fresh water.

   [g] Fill the system with soft water, adding Detroit Diesel Power Cool or equivalent fully formulated, inhibited ethylene glycol-base antifreeze in the required concentration.

   [h] Drain the raw water system.

NOTE:
Ensure that the raw water is drained from the lowest position in the system.

(Rev. 2004) *All information subject to change without notice.*
6SE483 0401 Copyright © 2004 DETROIT DIESEL CORPORATION

[i] If a Jabsco® water pump is installed, remove the raw water pump cover and impeller.

NOTE:
The blade of the impeller bent against the cam may take a set (lose flexibility) during long storage time.

Jabsco® is a registered trademark of ITT International.

2. Prepare marine lube oil system for winter storage as follows:

[a] Drain the engine crankcase.

[b] Install and tighten the crankcase drain plugs.

[c] Install new lubricating oil filter elements and gaskets.

[d] Fill the crankcase to the proper level with Tectyl® 930A preservative lubricating oil or an equivalent 30-weight preservative lubricating oil meeting Mil-L-21260C, Grade 2 specification.

CAUTION:

Diesel engine exhaust and some of its constituents are known to the State of California to cause cancer, birth defects, and other reproductive harm.

- ☐ **Always start and operate an engine in a well ventilated area.**
- ☐ **If operating an engine in an enclosed area, vent the exhaust to the outside.**
- ☐ **Do not modify or tamper with the exhaust system or emission control system.**

[e] Start the engine and allow to idle approximately 10 minutes or more to ensure complete lubrication of all the moving parts.

[f] Shut down the engine.

Tectyl® is a registered trademark of Ashland Oil, Inc.

 Copyright © 2004 DETROIT DIESEL CORPORATION

3. Prepare marine fuel system for winter storage as follows:

   [a] Top off fuel tanks to prevent water from entering the system from condensation.

NOTE:
If the boat is stored where water in the fuel tanks may be a problem, additives containing methyl carbitol or butyl cellusolve may be used.

   [b] Follow additive manufacturer's usage and handling recommendations, and observe all precautions. Where biological contamination of fuel may be a problem, add a biocide such as Biobor JF, or equivalent, to the fuel.

NOTE:
When using a biocide, follow the manufacturer's usage and handling recommendations, and observe all precautions.

NOTE:
Isopropyl alcohol is no longer recommended due to its negative effect on fuel lubricity.

   [c] Drain and replace fuel filters.

   [d] Fill the fuel filters with #1 diesel fuel or pure kerosene.

   [e] Start and operate the engine for approximately five minutes to circulate the clean fuel throughout the system.

   [f] Shut down the engine.

   Biobor® is a registered trademark of United States Borax and Chemical Corporation.

4. Prepare marine gears for winter storage as follows:

   [a] Drain the oil completely and refill with clean oil of the recommended grade and viscosity.

   [b] Remove and clean or replace the strainer and filter element.

   [c] Refer to section14.3 for the exhaust caution before preceeding. Start and run the engine at 600 rpm for ten minutes to coat all the internal parts of the marine gear with clean oil.

   [d] Engage the clutch, alternating from forward to reverse, to circulate clean oil throughout all of the moving parts.

   [e] Shut down the engine.

(Rev. 2004) *All information subject to change without notice.*
6SE483 0401 Copyright © 2004 DETROIT DIESEL CORPORATION

5. Prepare marine electrical system for winter storage as follows:
   [a] Remove and clean the batteries and battery cables with a baking soda-water solution and rinse with fresh water.

NOTE:
Do not allow the solution to enter the battery.

   [b] Add distilled water to the electrolyte, if necessary, and fully charge the battery.
   [c] Store the battery in a cool dry place (never below 32°F or 0°C).
   [d] Keep the battery fully charged and check the level and specific gravity of the electrolyte periodically.
   [e] Loosen alternator and accessory drive belts.

NOTE:
Loosening of the belts will prevent sticking between the belt and pulley.

6. Prepare marine air intake and exhaust system for winter storage as follows:
   [a] Seal all engine openings, including the exhaust outlet, with a moisture-resistant tape. Use cardboard, plywood or metal covers where practical.
7. Completely clean the exterior of the engine.
8. Check for areas that show corrosion and touch up with spray paint.

14.3.2 Restore Marine Engine from Winter Storage

Restore the marine engine from winter storage as follows:

1. Restore the air intake, exhaust system, air box drains and crankcase vent tubes from winter storage as follows:
   [a] Remove all the covers and tape from the openings of the engine.
   [b] Check that the fuel tank vents are open, along with the openings that may have been closed off in the engine room during winter storage.
2. Restore the lube oil system from winter storage as follows:
   [a] Remove the drain plug and drain the preservative oil from the crankcase.
   [b] Install the drain plug and tighten.
   [c] Fill the crankcase to the proper level with the recommended grade of oil. Refer to section 5.2.

NOTE:
You may wish to change the lube oil filters, especially if they were not changed before winter storage.

   [d] Remove the air silencers or air cleaners in order to rotate the turbocharger.

 Copyright © 2004 DETROIT DIESEL CORPORATION

[e] Disconnect the oil pressure line to the turbocharger.

[f] Using an oil can, pre-lube the turbocharger bearings.

[g] While pre-lubing the bearings, turn the turbocharger by hand. Fill the turbo bearing housing cavity with approximately one pint of the recommended grade of engine oil.

[h] Reconnect the oil pressure line.

[i] Install the air cleaner or air silencer.

NOTE:
Where available, a pressure prelubricator may be used to charge the lube oil system prior to starting the engine.

[j] Remove the pipe plug from the engine main oil gallery and attach the prelubricator hose.

[k] Using a positive displacement pump set at 25-35 psi, pump in the recommended grade of engine lubricating oil.

[l] Disconnect the prelubricator hose, plug the main oil gallery hole and replace all components previously removed.

[m] After approximately 20 minutes, check the crankcase oil level.

[n] Add enough oil to bring the level to the full mark on the dipstick.

3. Restore the electrical system from winter storage as follows:

[a] Charge the storage batteries and install.

[b] Securely fasten the cables in place.

[c] Tighten alternator belt to the proper tension.

4. Restore the cooling system from winter storage as follows:

[a] Close all drains that were open on the raw water system.

[b] If previously removed, install the raw water pump impeller, ensuring the vane of the impeller is turned in the correct direction.

[c] Install the raw water pump cover using a new gasket.

[d] Remove the plug or zinc electrode on the suction side of the raw water pump.

[e] Prime the raw water pump to prevent the pump running dry. Pour in at least one pint of water.

[f] Install plug or zinc electrode and tighten.

[g] Check the level of the antifreeze and coolant inhibitors in the fresh water system.

[h] Check tightness on all hoses.

[i] Insure that the raw water inlet sea cocks are operable and are open.

(Rev. 2004) *All information subject to change without notice.*
6SE483 0401 Copyright © 2004 DETROIT DIESEL CORPORATION

5. Restore the fuel system from winter storage as follows:
   [a] Prime the system with clean diesel fuel.
   [b] Rotate the engine 180 degrees.
   [c] Prime the system a second time to ensure fuel has passed through the injectors.
6. Restore the marine gear from winter storage as follows:
   [a] Check the oil level in the marine gear.
   [b] Marine gear oil filters may be changed if they were not changed before winter storage.
7. On non-DDEC engines, ensure that the stop lever is working freely.
8. Check the emergency shut-down system to ensure that the engine can be stopped under emergency conditions.
9. While holding the stop button in, crank the engine, release the stop button allowing the engine to start.
10. To prevent serious damage to the starter, do not crank the engine over 15 seconds at a time.
11. After the engine has started, observe the oil pressure gage immediately.
12. If there is no oil pressure indicated within 10 to 15 seconds, stop the engine and check the lube oil system.
13. Increase the RPM to part throttle and no load for approximately five minutes, allowing the engine to warm up before applying a load.
14. While the engine is running, check for coolant, fuel or lubricating oil leaks.
15. Tighten and align connections where necessary to stop leaks.
16. Operate the engine at idle, engaging the marine gear forward and reverse to ensure complete circulation of oil.
17. Monitor the marine gear oil pressure.
18. Shut down the engine, then check the oil level in the engine and marine gear.
19. Check the level of coolant in the expansion tank.
20. Fire off the engines for sea trial.
21. Once the engines have reached operating temperature, again check for water, lube oil and fuel leaks.
22. Check that the pressure line to the turbocharger is tight and that there are no leaks.
23. Monitor the operating conditions of the engine at 1200, 1400, 1600, 1800, 2000 and full load RPM.
24. Inspect the engines for corrosion. Where necessary, clean and apply spray paint.

 Copyright © 2004 DETROIT DIESEL CORPORATION

(Rev. 2004) *All information subject to change without notice.*
6SE483 0401 Copyright © 2004 DETROIT DIESEL CORPORATION

15 IGNITION SYSTEM

Section **Page**

15.1 OVERVIEW OF IGNITION SYSTEM 15-3
15.2 COIL OVER PLUG IGNITION SYSTEM 15-4
15.3 IGNITION BOOT ASSEMBLY 15-9
15.4 IGNITER MODULE 15-10
15.5 IGNITER MODULE BRACKET 15-11
15.6 IGNITION COIL HARNESS 15-12
15.7 SPARK PLUGS 15-16

 Copyright © 2004 DETROIT DIESEL CORPORATION

15.1 OVERVIEW OF IGNITION SYSTEM

The Series 60G engine uses a distributorless ignition system (DIS) to initiate combustion and to control combustion timing. The ECM controls dwell time as a function of supply voltage and ignition timing for all speeds and load conditions. The spark event is controlled based on a magnetic pick-up on the crankshaft so it is not necessary to adjust ignition timing.

 Copyright © 2004 DETROIT DIESEL CORPORATION

15.2 COIL OVER PLUG IGNITION SYSTEM

Series 60G genset engines use the coil over plug ignition system. This system consists of six coils, six ignition boots, mounting screws and seals, an igniter module, an igniter module bracket, an ignition coil harness, a ground strap, and six spark plugs. The coils mount in the rocker cover directly above the spark plugs. A coil cover mounts in the rocker cover which protects the coils and shields electromagnetic radiation (EMR) from the environment. See Figure 15-1.

(Rev. 2004) *All information subject to change without notice.*
6SE483 0401 Copyright © 2004 DETROIT DIESEL CORPORATION

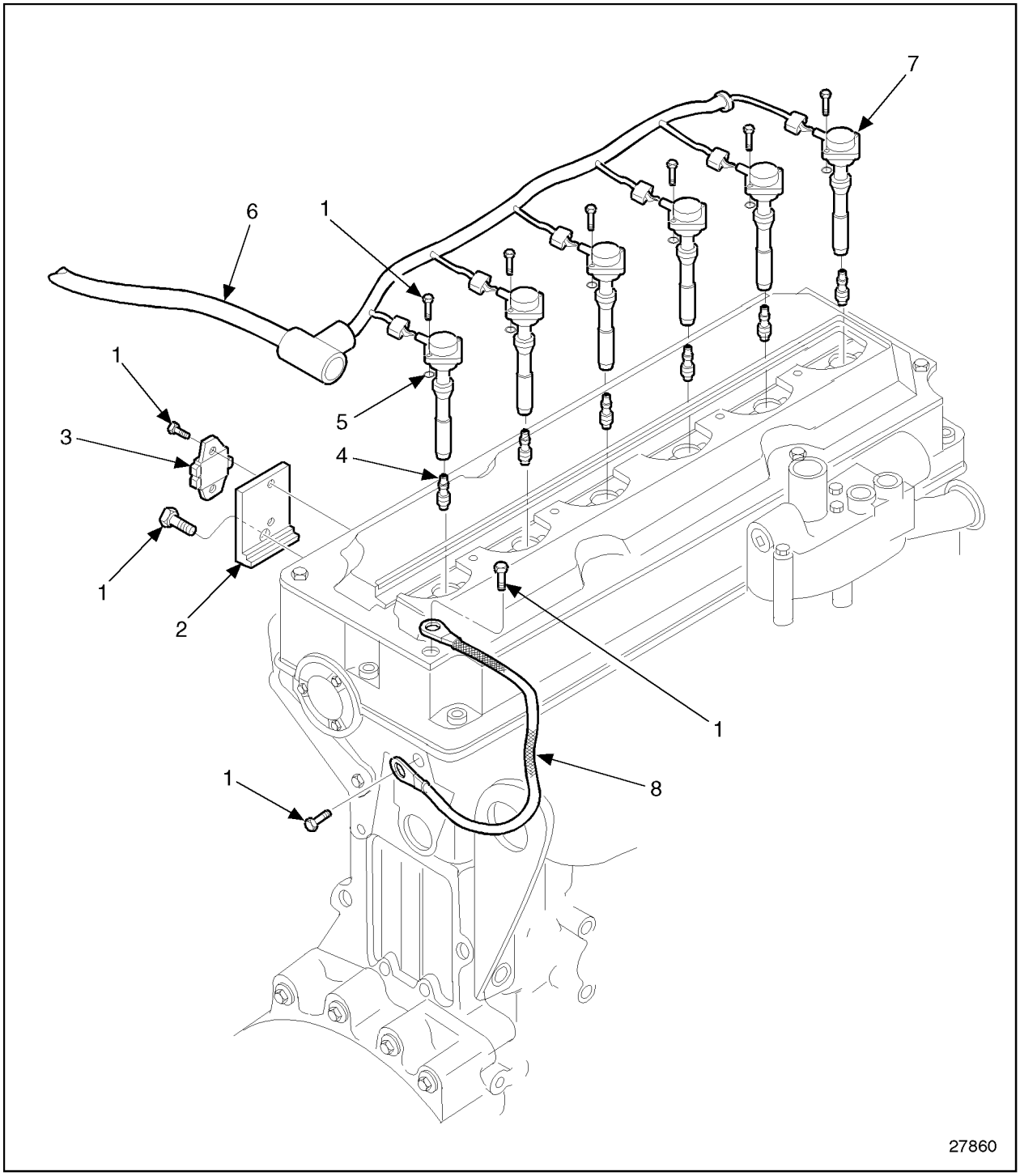

1. Bolt
2. Igniter Module Bracket
3. Igniter Module
4. Spark Plug
5. O-ring
6. Igniter Coil Harness
7. Coil and Igniter Boot Assembly
8. Ground Strap

Figure 15-1 Coil Over Plug Ignition System

 Copyright © 2004 DETROIT DIESEL CORPORATION

The ignition coil assembly consists of the ignition coil and integral seal. This is serviced as an assembly, or the seal can be serviced separately. Before the coil can be installed into the engine, it is necessary to attach the boot, mounting screws, and O-rings onto the ignition coil assembly. See Figure 15-2.

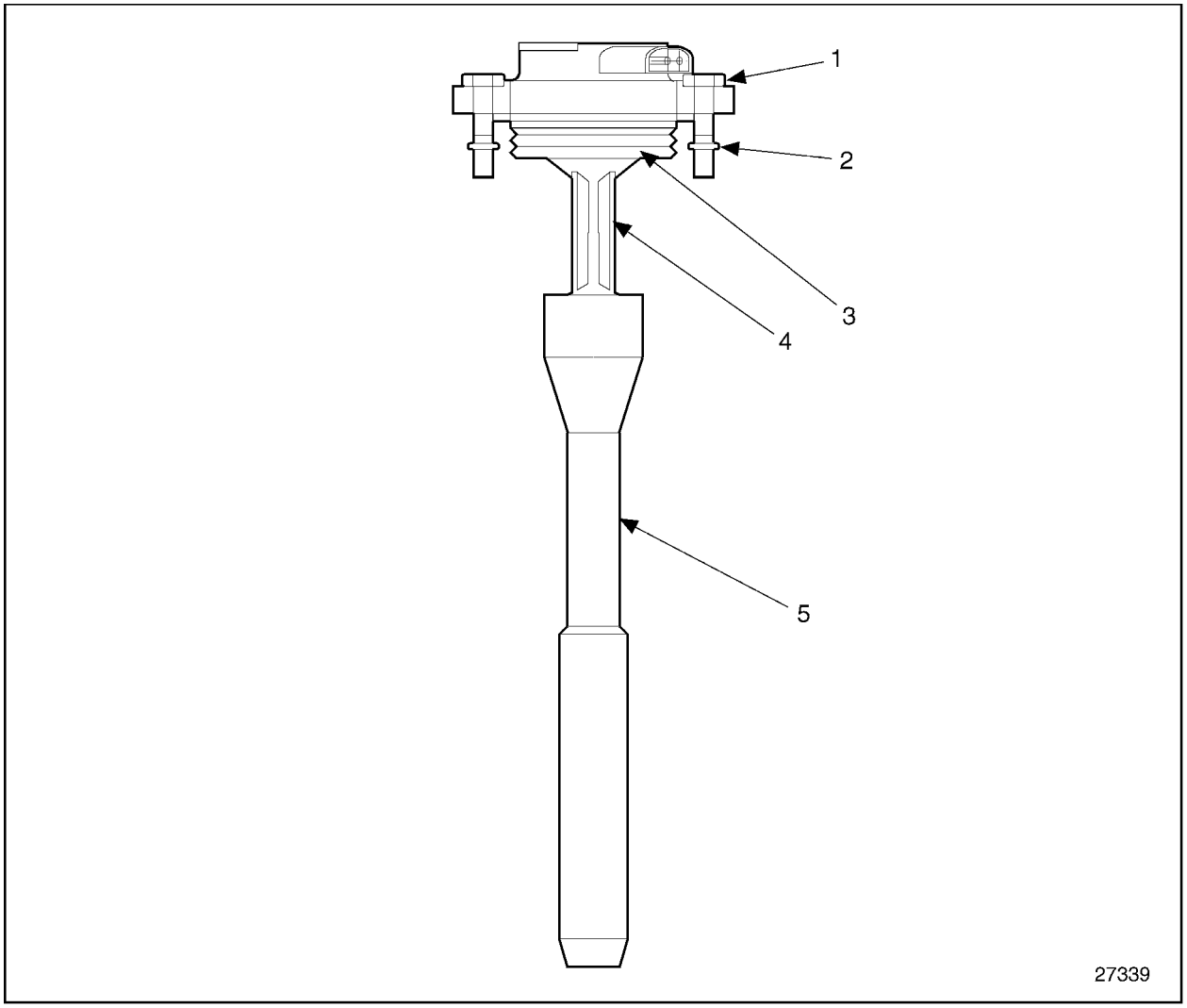

1. Bolt, M6 x 1.0 in. (2)
2. O-ring (2)
3. Ignition Coil Seal
4. Ignition Coil Assembly
5. Boot and Spring Assembly

Figure 15-2 Ignition Coil Assembly

(Rev. 2004) *All information subject to change without notice.*
6SE483 0401 Copyright © 2004 DETROIT DIESEL CORPORATION

15.2.1 Removal of Ignition Coil

Remove the ignition coil as follows:

1. Remove the two Phillips screws holding the coil cover in the rocker cover.
2. Remove the low voltage wire harness connectors at each coil to be removed.
3. Unscrew the two M6 x 1.0 bolts that attach the coil to the rocker cover. Pull the coil assembly with the boot, mounting screws, and O-rings out of the spark plug well.
4. Inspect the ignition coil. Refer to section 15.2.1.1.

15.2.1.1 Inspection of Ignition Coil

Inspect the ignition coil as follows:

CAUTION:

To avoid injury from flying debris when using compressed air, wear adequate eye protection (face shield or safety goggles) and do not exceed 40 psi (276 kPa) air pressure.

1. Visually check the ignition coil for dirt and debris.
   [a] If dirt and debris are present, clean as necessary and apply a light coat of dielectric grease on the inside of the ignition boot. Reuse ignition coil. Refer to section 15.2.2.
   [b] If no dirt and debris are present, reuse ignition coil. Apply a light coat of dielectric grease on the inside of the ignition boot. Refer to section 15.2.2.
2. Visually check the interface between the boot and spark plug for oil.
   [a] If oil is present, clean as necessary. Apply a light coat of dielectric grease on the inside of the ignition boot. Refer to section 15.2.2.
   [b] If no oil is present, reuse ignition coil. Apply a light coat of dielectric grease on the inside of the ignition boot. Refer to section 15.2.2.

 Copyright © 2004 DETROIT DIESEL CORPORATION

15.2.2 Installation of Ignition Coil

Install the ignition coil as follows:

1. Install the ignition coil assembly with the boot, mounting screws, and O-rings into the spark plug well.
2. Guide the mounting bolts through the holes in the rocker cover and screw them into the extension tube. Torque the bolts to 13-16 N·m (10-12 lb·ft).
3. Push the connectors of the low voltage wire harness onto the ignition coils.
4. Put antisieze compound on the two coil cover mounting screws to aid removal in the future.
5. Install the coil cover on the rocker cover with two Phillips mounting screws.

(Rev. 2004) *All information subject to change without notice.*
6SE483 0401 Copyright © 2004 DETROIT DIESEL CORPORATION

15.3 IGNITION BOOT ASSEMBLY

The boot assembly consists of the boot and spring and is serviced as an assembly.

15.3.1 Removal of Ignition Boot

Remove the ignition boot as follows:

1. Peel the end back from the coil and pull the two components apart.

15.3.2 Installation of Ignition Boot

Install the ignition boot as follows:

1. Secure the boot over the end of the coil.

NOTE:
Ensure that the boot is all the way on the coil.

 Copyright © 2004 DETROIT DIESEL CORPORATION

15.4 IGNITER MODULE

The igniter module creates a ground path for the ignition coil primary circuit and limits the current to 7.5 amps. A 12-volt power source is supplied to the igniter module along with the command signals from the ECM.

15.4.1 Removal of Igniter Module

Remove the igniter module as follows:

1. Disconnect the ignitor coil harness from the igniter module.
2. Unscrew the two M6 x 1.0 attachment bolts.
3. Inspect the igniter. Refer to section 15.4.1.1.

15.4.1.1 Inspection of Igniter Module

Inspect the igniter module as follows:

1. Visually check the back surface of the igniter module, igniter module bracket, and connectors for dirt and debris.

CAUTION:

To avoid injury from flying debris when using compressed air, wear adequate eye protection (face shield or safety goggles) and do not exceed 40 psi (276 kPa) air pressure.

[a] If dirt and debris are present, clean as necessary with compressed air and reuse. Refer to section 15.4.2.

[b] If no dirt or debris are present, reuse the igniter module. Refer to section 15.4.2.

15.4.2 Installation of Igniter Module

Install the igniter module as follows:

1. Install the two M6 x 1.0 mounting screws. Torque to 13 - 16 N·m (10-12 lb·ft).
2. Press the connectors into the igniter module.

(Rev. 2004) *All information subject to change without notice.*
6SE483 0401 Copyright © 2004 DETROIT DIESEL CORPORATION

15.5 IGNITER MODULE BRACKET

The igniter module gives off heat and must be mounted on the bracket to keep the internal temperature within acceptable limits. The igniter module bracket is made of aluminum to conduct heat from the igniter module.

15.5.1 Removal of Igniter Module Bracket

Remove the igniter module bracket as follows:

1. Disconnect the ignition coil harness from the igniter module.
2. Remove the igniter module. Refer to section 15.4.1.
3. Remove the M10 x 1.5 x 30 mounting bolt.
4. Inspect the igniter module bracket.

15.5.1.1 Inspection of Igniter Module Bracket

Inspect the igniter module bracket as follows:

1. Visually check the igniter module bracket for cracks and distortion.
   [a] If damage is found, replace the igniter module bracket.
   [b] If no damage is found, reuse the igniter module bracket.

15.5.2 Installation of Igniter Module Bracket

Install the igniter module bracket as follows:

1. Install the bracket to the cylinder head using M10 x 1.5 x 30 mounting bolt. Torque bolt to 58 - 73 N·m (43-54 lb·ft).
2. Press the connectors of the ignition coil harness on the igniter module.

 Copyright © 2004 DETROIT DIESEL CORPORATION

15.6 IGNITION COIL HARNESS

The ignition coil harness provides the 12-volt power to the ignition coils and igniter module, transmits the command signals from the ECM to the igniter module, and the ground circuit from the coils to the igniter module. See Figure 15-3.

(Rev. 2004) *All information subject to change without notice.*
6SE483 0401 Copyright © 2004 DETROIT DIESEL CORPORATION

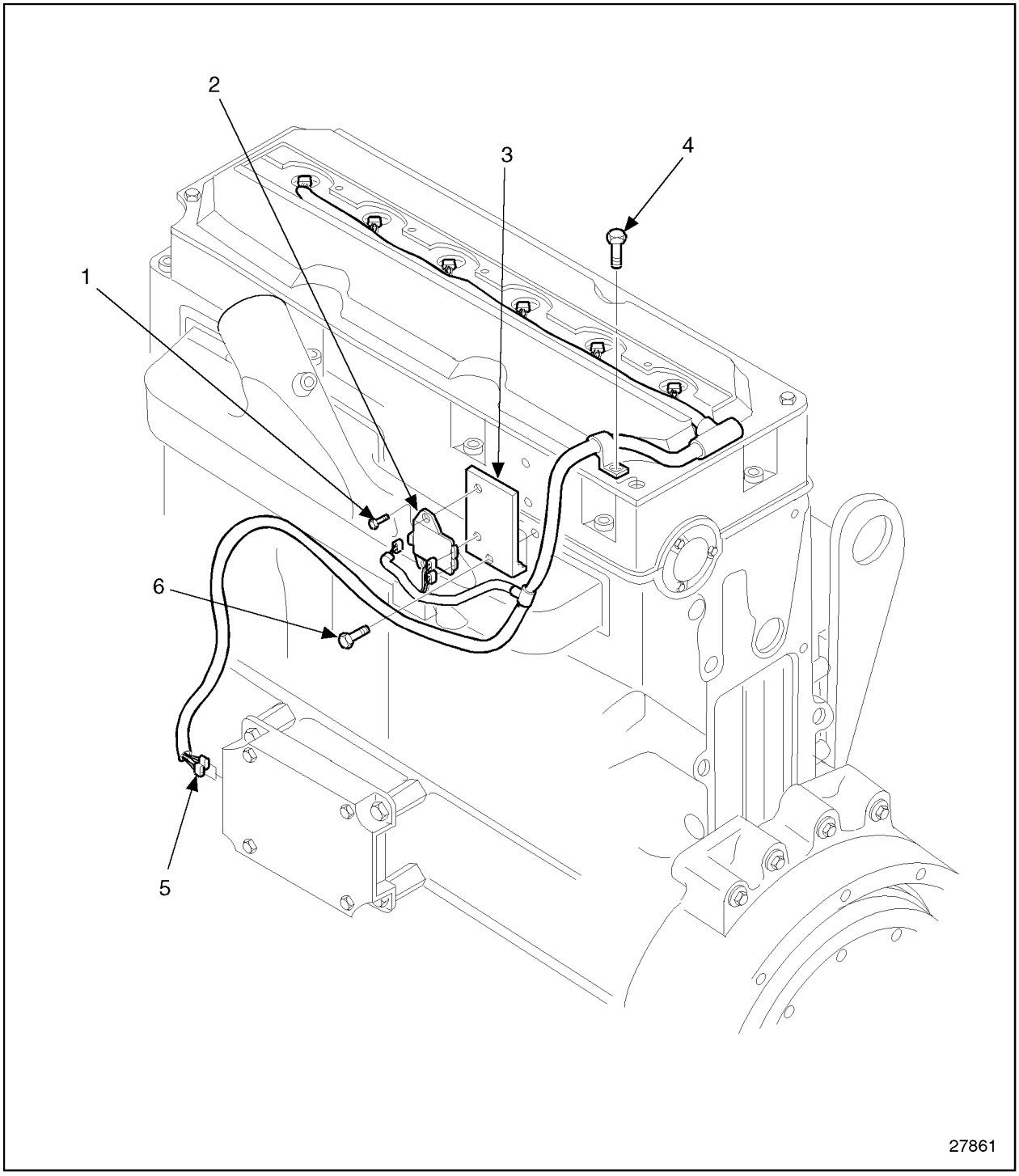

1. Bolt
2. Module
3. Bracket
4. Bolt
5. Harness Connector
6. Bolt

Figure 15-3 Ignition Coil Harness

 Copyright © 2004 DETROIT DIESEL CORPORATION

15.6.1 Removal of Ignition Coil Harness

Remove the ignition coil harness as follows:

1. Remove the two Phillips screws holding the coil cover in the rocker cover. Remove the coil cover.
2. Pull the connectors of the ignition coil harness from the four ignition coils.
3. Pull the connectors from the igniter module.
4. Disconnect the ignition coil harness from the 12-volt power supply.
5. Disconnect the ignition coil harness from the ECM.
6. Unscrew the harness clips from the rocker cover and the cylinder block.
7. Inspect the ignition coil harness. Refer to section 15.6.1.1.

15.6.1.1 Cleaning of Ignition Coil Harness

Clean the ignition coil harness as follows:

CAUTION:

To avoid injury from flying debris when using compressed air, wear adequate eye protection (face shield or safety goggles) and do not exceed 40 psi (276 kPa) air pressure.

1. Remove dirt and debris form the connectors on the ignition coil harness, coils, igniter module, 12-volt power supply, and the ECM with compressed air.

15.6.2 Inspection of Ignition Coil Harness

Inspect the ignition coil harness as follows:

1. Visually check the harness for damage.
   [a] If damage is found, replace the ignition coil harness. Refer to section 15.6.3.
   [b] If no damage is found, reuse the ignition coil harness. Refer to section 15.6.3.

(Rev. 2004) *All information subject to change without notice.*
6SE483 0401 Copyright © 2004 DETROIT DIESEL CORPORATION

15.6.3 Installation Ignition Coil Harness

Install the ignition coil harness as follows:

1. Press the connectors of the ignition coil harness onto the four ignition coils.
2. Connect the ignition coil harness to the igniter module.
3. Connect the ignition coil harness to the 12-volt power supply.
4. Connect the ignition coil harness to the ECM.
5. Attach the harness clips to the rocker cover and cylinder block.
6. Add antisieze compound to the two coil cover mounting screws to aid removal in the future.
7. Install the coil cover on the rocker cover with the two Phillips mounting screws.

 Copyright © 2004 DETROIT DIESEL CORPORATION

15.7 SPARK PLUGS

The condition of the spark plug determines the high voltage level and is the single most important component in the ignition system. The size of the electrode gap, condition of the electrodes, and the amount of deposits on the electrodes all affect the life of the spark plug. The electrodes of the spark plug are made from platinum which will minimize electrode wear.

Replace the spark plug with a new one if the electrode wear and amount of deposits are excessive. Otherwise the spark plug can be regapped to 0.015 in.

15.7.1 Removal of Spark Plug

Remove the spark plug from the cylinder head as follows:

1. Remove the ignition coils. Refer to section 15.2.1.
2. Remove the plug using a 5/8 in. thin wall spark plug socket and appropriate extensions.

15.7.1.1 Cleaning of Spark Plug Terminal, Ceramic Insulation, and Socket Area

Clean the spark plug terminal, ceramic insulation, and spark plug socket as follows:

CAUTION:

To avoid injury from flying debris when using compressed air, wear adequate eye protection (face shield or safety goggles) and do not exceed 40 psi (276 kPa) air pressure.

1. Remove dirt and debris with compressed air.
2. Remove oil and grease deposits.
3. Inspect the spark plug.

(Rev. 2004) *All information subject to change without notice.*
6SE483 0401 Copyright © 2004 DETROIT DIESEL CORPORATION

15.7.1.2 Inspection of Spark Plug

Inspect the spark plug as follows:

1. Measure the spark plug gap using a 0.015 in. feeler gage.
   [a] If the spark plug gap measured is not to specifications, regap the plug and reuse. Refer to section 15.7.2.
   [b] If the spark plug gap is within specifications, reuse the spark plug. Refer to section 15.7.2.
2. Visually check the spark plugs for excessive deposits and condition of the electrode.
   [a] If the spark plug has excessive deposits and electrode wear, replace the spark plug. Refer to section 15.7.2.
   [b] If the spark plug has no deposits nor excessive electrode wear, reuse the spark plug. Refer to section 15.7.2.

15.7.2 Installation of Spark Plug

Install the spark plug as follows:

1. Install the spark plug using a 5/8 in. thin wall socket and appropriate extensions. Torque the spark plug to 35 - 40 N·m (26-30 lb·ft).
2. Install the ignition boot.
3. Install the ignition harness. Refer to section 15.6.3.

 Copyright © 2004 DETROIT DIESEL CORPORATION

(Rev. 2004) *All information subject to change without notice.*
6SE483 0401 Copyright © 2004 DETROIT DIESEL CORPORATION

16 MISFIRING CYLINDER

Section		Page
16.1	POOR VEHICLE GROUND	16-3
16.2	AERATED FUEL	16-5
16.3	IMPROPER INJECTOR CALIBRATION SETTING (DDEC III/IV ENGINES ONLY)	16-7
16.4	IMPROPER VALVE CLEARANCE OR INJECTOR HEIGHT, WORN OR DAMAGED CAMSHAFT LOBES AND ROLLERS	16-12
16.5	FAULTY FUEL INJECTOR	16-24
16.6	FAULTY ELECTRONIC CONTROL MODULE	16-26
16.7	WORN OR DAMAGED VALVE OR CYLINDER KIT	16-28

 Copyright © 2004 DETROIT DIESEL CORPORATION

16.1 POOR VEHICLE GROUND

To determine if poor vehicle ground is causing the cylinder to misfire, perform the following steps:

1. Remove alternator belt.

⚠ CAUTION:

To avoid injury before starting and running the engine, ensure the vehicle is parked on a level surface, parking brake is set, and the wheels are blocked.

⚠ CAUTION:

Diesel engine exhaust and some of its constituents are known to the State of California to cause cancer, birth defects, and other reproductive harm.

- ☐ **Always start and operate an engine in a well ventilated area.**
- ☐ **If operating an engine in an enclosed area, vent the exhaust to the outside.**
- ☐ **Do not modify or tamper with the exhaust system or emission control system.**

2. Start the engine.
3. Run the engine through operating range.
4. Listen for engine misfiring.
   [a] If the engine is not misfiring, refer to section 16.1.1. Shut down the engine.
   [b] If the engine is still misfiring, check for aerated fuel; refer to section 16.2.

16.1.1 Negative Lead Repair

Perform the following steps for negative lead repair:

1. Shut down the engine.
2. Remove negative lead(s) at frame ground stud near battery box.
3. Clean ground stud; refer to OEM guidelines.
4. Clean negative lead(s) terminal lugs with low grit sandpaper.
5. Repair any loose or damaged lead(s), using the splice method or rosin core solder.
6. Install negative lead(s) to frame ground stud; refer to OEM guidelines.
7. Install alternator belt. Tighten belt to:

 Copyright © 2004 DETROIT DIESEL CORPORATION

[a] If installing a new belt, tighten to 170 N·m (125 lb).

[b] If installing a used belt, tigthen to 135 N·m (100 lb).

[c] If a belt tension gage is not available, adjust the belt tension so that a firm push with the thumb, at a point midway between the two pulleys, will depress the belt 12.70 - 19.05 mm (0.500 -0.750 in.).

NOTE:
When installing or adjusting an accessory drive belt, be sure the bolt at the accessory adjusting pivot point is properly tightened, as well as the bolt in the adjusting slot.

NOTE:
Drive belts (Vee and poly-vee) should be replaced every 2,000 hours or 100,000 miles (160,000 km).

8. Verify negative lead repair; refer to section 16.1.1.1.

16.1.1.1 Verification of Repair for Negative Lead

Perform the following steps to determine if negative lead repair resolved the misfiring cylinder condition:

1. Refer to section 16.1 for exhaust caution before preceeding. Start engine.
2. Run engine speed up to the occurrence of the misfiring.
3. Listen for misfiring cylinder.
   [a] If the engine is not misfiring, no further troubleshooting is required. Shut down the engine.
   [b] If the engine is misfiring, check for aerated fuel. Shut down the engine; refer to section 16.2.

(Rev. 2004) *All information subject to change without notice.*
6SE483 0401 Copyright © 2004 DETROIT DIESEL CORPORATION

16.2 AERATED FUEL

To determine if aerated fuel is causing the cylinder to misfire, perform the following steps:

1. Disconnect the fuel line return hose from the fitting located at the fuel tank.
2. Place the opened end of fuel line into a suitable container.

CAUTION:

To avoid injury before starting and running the engine, ensure the vehicle is parked on a level surface, parking brake is set, and the wheels are blocked.

CAUTION:

Diesel engine exhaust and some of its constituents are known to the State of California to cause cancer, birth defects, and other reproductive harm.

- ☐ **Always start and operate an engine in a well ventilated area.**
- ☐ **If operating an engine in an enclosed area, vent the exhaust to the outside.**
- ☐ **Do not modify or tamper with the exhaust system or emission control system.**

3. Start the engine.
4. Run the engine at 1000 r/min.
5. Visually check to see if air bubbles are rising to the surface of the fuel within the container.
   [a] If air bubbles are present, refer to section 16.2.1.
   [b] If air bubbles are not present, check for improper calibration setting; refer to section 16.3. Shut down the engine.

 Copyright © 2004 DETROIT DIESEL CORPORATION

16.2.1 Aerated Fuel Repair

Perform the following steps for air in fuel repair:

1. Shut down engine.
2. Tighten all fuel line connections between fuel tank and fuel pump; refer to OEM guidelines.
3. Visually inspect all fuel lines between fuel tank and fuel pump for leaks.
4. Replace any damaged components; refer to section 2.
5. Verify repair of fuel lines:
   [a] If no air in the fuel return, refer to section 16.2.1.1.
   [b] If air in the ruel return, locate and repair. Then refer to section 16.2.1.1.

16.2.1.1 Test the Engine with Repair for Aerated Fuel

Perform the following steps to determine if the aerated fuel repair resolved the misfiring cylinder condition:

1. Refer to section 16.2 for exhaust caution before preceeding. Start engine.
2. Run engine at 1000 r/min.
3. Listen for misfiring cylinder.
   [a] If the engine is not misfiring, no further troubleshooting is required. Shut down the engine.
   [b] If the engine is misfiring, check for improper injector setting. Shut down the engine; refer to section 16.3.

(Rev. 2004) *All information subject to change without notice.*
6SE483 0401 Copyright © 2004 DETROIT DIESEL CORPORATION

16.3 IMPROPER INJECTOR CALIBRATION SETTING (DDEC III/IV ENGINES ONLY)

For troubleshooting DDEC I and DDEC II engines, refer to section 16.4.

To determine if an improper injector calibration setting is causing the cylinder to misfire, perform the following steps:

1. Remove the valve rocker cover(s); for one-piece refer to section 1.6.2, for two-piece refer to section 1.6.3, for three-piece refer to section 1.6.5.
2. Record the injector calibration code of each injector noting the cylinder number; see Figure 16-1.

NOTE:
Injector calibration and bar codes may be absent from the load plates on first-run production DDEC III/IV injectors 5235575, 5235580, and 5235550. The correct calibration code for these units is "01". Load plates on current DDEC III/IV injectors include the required calibration or bar code information.

 Copyright © 2004 DETROIT DIESEL CORPORATION

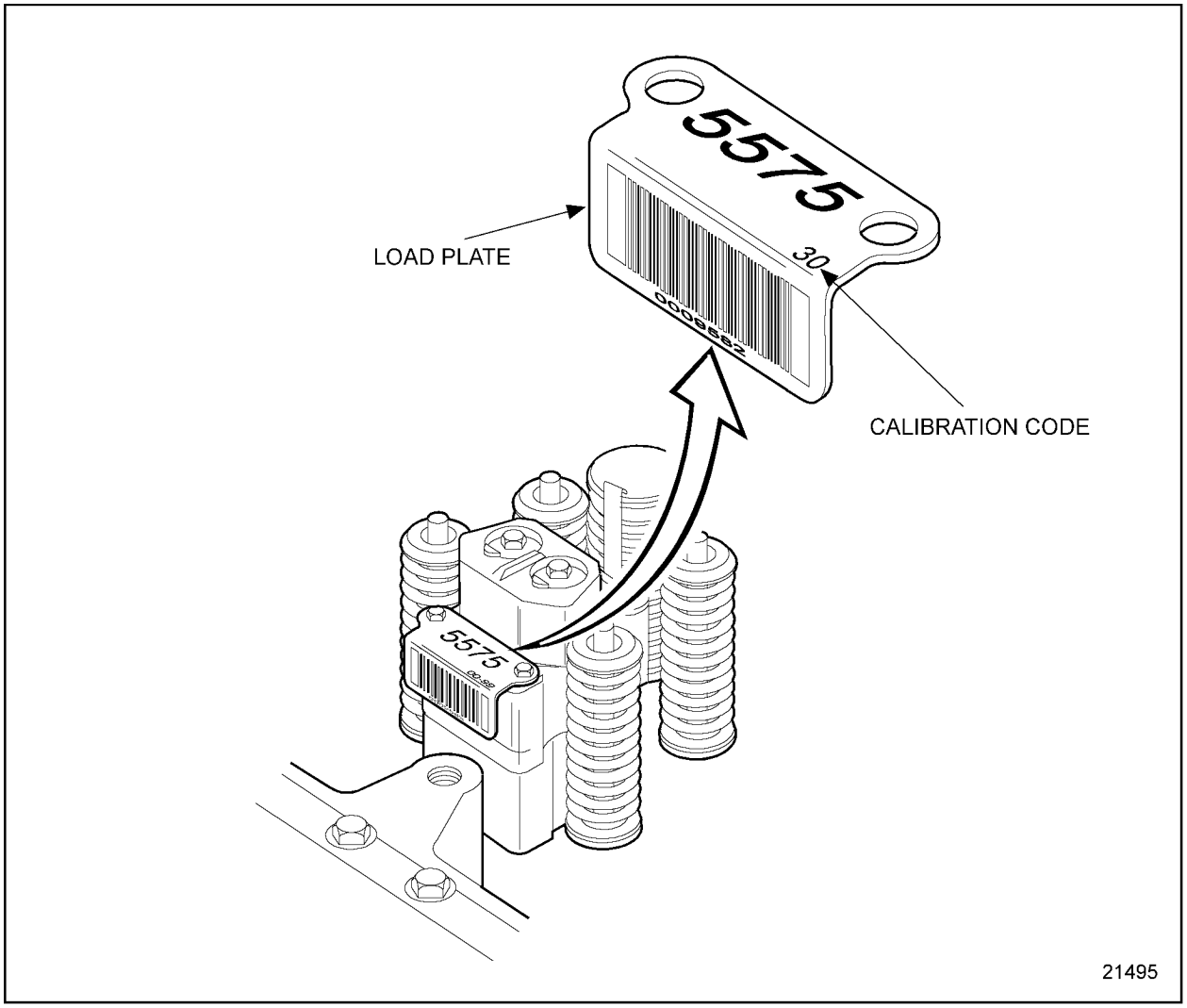

Figure 16-1 Injector Calibration Code Location

(Rev. 2004) *All information subject to change without notice.*
6SE483 0401 Copyright © 2004 DETROIT DIESEL CORPORATION

3. Turn vehicle ignition to the *on position*, but do not run engine.
4. Install Display Data Line (DDL) adaptor to the data cable and plug the adaptor into the DDL connector in the vehicle; refer to OEM guidelines.
5. >From the Diagnostic Data Reader (DDR) DDEC III/IV Select Menu, scroll to select ENGINE and press the ENTER key.
6. Scroll to select FUEL INJECTOR INFO and press the ENTER key.
7. Scroll to select FUEL INJECTOR CAL and press the ENTER key.
8. Scroll to select FUEL INJECTOR CAL. Select VIEW and press the ENTER key.
9. Compare the calibration code(s) shown on the display with the two digit calibration code(s) on the injector(s).
   [a] If the calibration code on the display is different then the calibration code on the suspect injector for that cylinder, the injector setting must be repaired, see Figure 16-1; refer to section 16.3.1.
   [b] If test codes match; refer to section 16.4.

16.3.1 Improper Injector Setting Repair

Perform the following steps to recalibrate improper injector setting:

NOTICE:
Whenever a DDEC III injector is removed from the engine, it should be reinstalled in its original location to maintain proper cylinder balance. If reinstalled in a different cylinder head location, injector calibration ***must*** be rechecked with the DDR and updated. Failure to observe these steps may result in reduced engine performance.

NOTE:
Injector calibration and bar codes may be absent from the load plates on first-run production DDEC III/IV injectors 5235575, 5235580, and 5235550. The correct calibration code for these units is "01". Load plates on current DDEC III/IV injectors include the required calibration or bar code information. See Figure 16-1.

1. Scroll to select FUNCTION to return to the FUEL INJECTOR CAL menu on the DDR.
2. Scroll to select FUEL INJECTOR CAL. Select UPDATE and press the ENTER key.
3. Type the four-digit "Update Injector Calibration" password for the DDR and press the ENTER key. If this feature is not password protected, type "0000" and press the ENTER key.

 Copyright © 2004 DETROIT DIESEL CORPORATION

4. A message will appear telling you to use the scroll keys to select the cylinder (requiring changes) or select TYPE # (enter the numerical keys to change the CAL (calibration value).

NOTE:
An asterisk (*) will highlight the first cylinder number on the list.

5. Scroll to the cylinder requiring change and type in the required two-digit injector calibration code number. Press the ENTER key.

NOTE:
The ENTER key must be pressed before the DDR will allow selection of another cylinder number.

6. Repeat step 5, until all changes have been made.
7. Scroll to select FUNCTION and press the ENTER key.
8. Scroll to select YES and press the ENTER key to reprogram the ECM with the revised injector calibration codes.

NOTE:
Turning the ignition to the *off position* and waiting five seconds before starting the engine is not required.

9. Disconnect the DDR; refer to OEM guidelines.

(Rev. 2004) *All information subject to change without notice.*
6SE483 0401 Copyright © 2004 DETROIT DIESEL CORPORATION

16.3.1.1 Verification of Repair for Improper Injector Setting

Perform the following steps to determine if the proper injector setting adjustment resolved the misfiring cylinder condition:

CAUTION:

To avoid injury before starting and running the engine, ensure the vehicle is parked on a level surface, parking brake is set, and the wheels are blocked.

1. Install the valve rocker cover(s); for one-piece refer to section 1.6.8, for two-piece and three-piece refer to section 1.6.9.

CAUTION:

Diesel engine exhaust and some of its constituents are known to the State of California to cause cancer, birth defects, and other reproductive harm.

- ☐ **Always start and operate an engine in a well ventilated area.**
- ☐ **If operating an engine in an enclosed area, vent the exhaust to the outside.**
- ☐ **Do not modify or tamper with the exhaust system or emission control system.**

2. Start the engine.
3. Run the engine at 1000 r/min.
4. Listen for misfiring cylinder.
   [a] If the engine is not misfiring, no further troubleshooting is required. Shut down the engine.
   [b] If the engine is misfiring, shut down the engine. Check for improper valve clearance and injector height and damaged or worn camshaft lobes and rollers; refer to section 16.4.

 Copyright © 2004 DETROIT DIESEL CORPORATION

16.4 IMPROPER VALVE CLEARANCE OR INJECTOR HEIGHT, WORN OR DAMAGED CAMSHAFT LOBES AND ROLLERS

Intake valve clearance and injector height are adjusted by means of an adjusting set screw and locknut located at the valve (or injector) end of the rocker arm; see Figure 16-2.

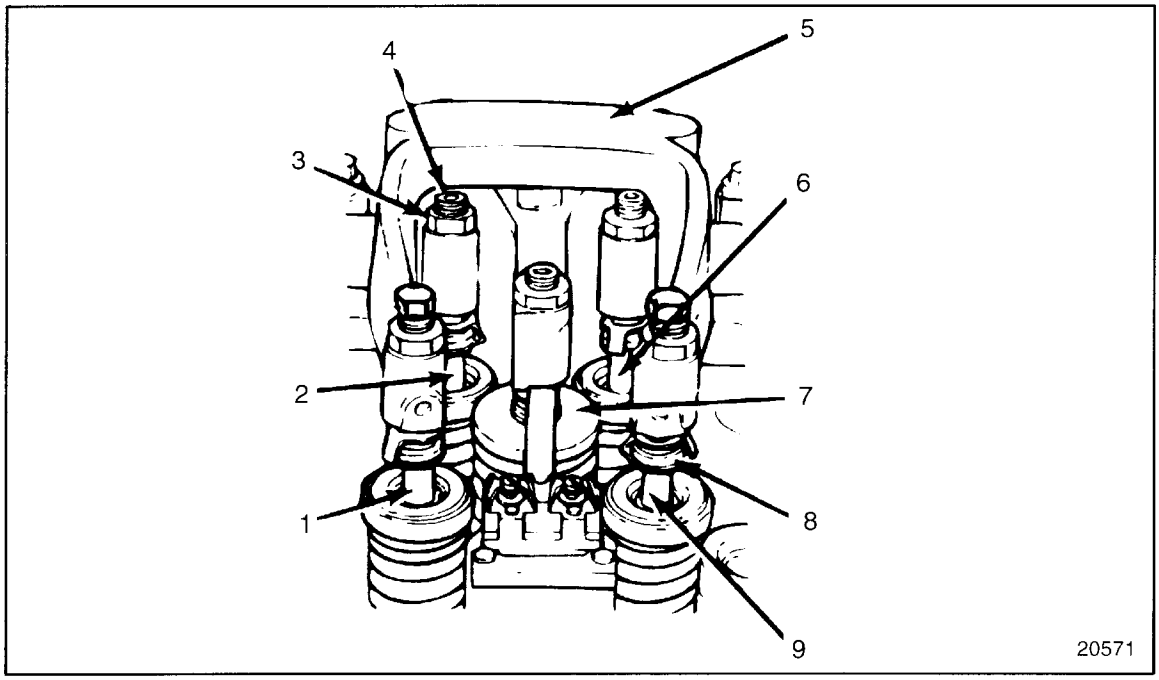

1. Exhaust Valve
2. Intake Valve
3. Locknut
4. Adjusting Set Screw
5. Exhaust Rocker Arm Assembly
6. Intake Valve
7. Fuel Injector Follower
8. Valve Button
9. Exhaust Valve

Figure 16-2 Valve and Fuel Injector Height Adjustment Components

NOTE:
On engines equipped with a Jake Brake®, measure valve lash and injector height before removing any brake housings. Only remove the brake housings necessary to provide access for adjustment.

(Rev. 2004) *All information subject to change without notice.*
6SE483 0401 Copyright © 2004 DETROIT DIESEL CORPORATION

The injector height is adjusted using the injector height gage, J 39697 (DDEC III/IV) or J 35637-A(DDEC II and I). On engines equipped with a Jake Brake®, move the handle on the injector height gage to the alternate position, 90 degrees to the shank. A height gage pilot hole is provided in the fuel injector body on the machined surface contacted by the injector clamp near the solenoid; see Figure 16-3.

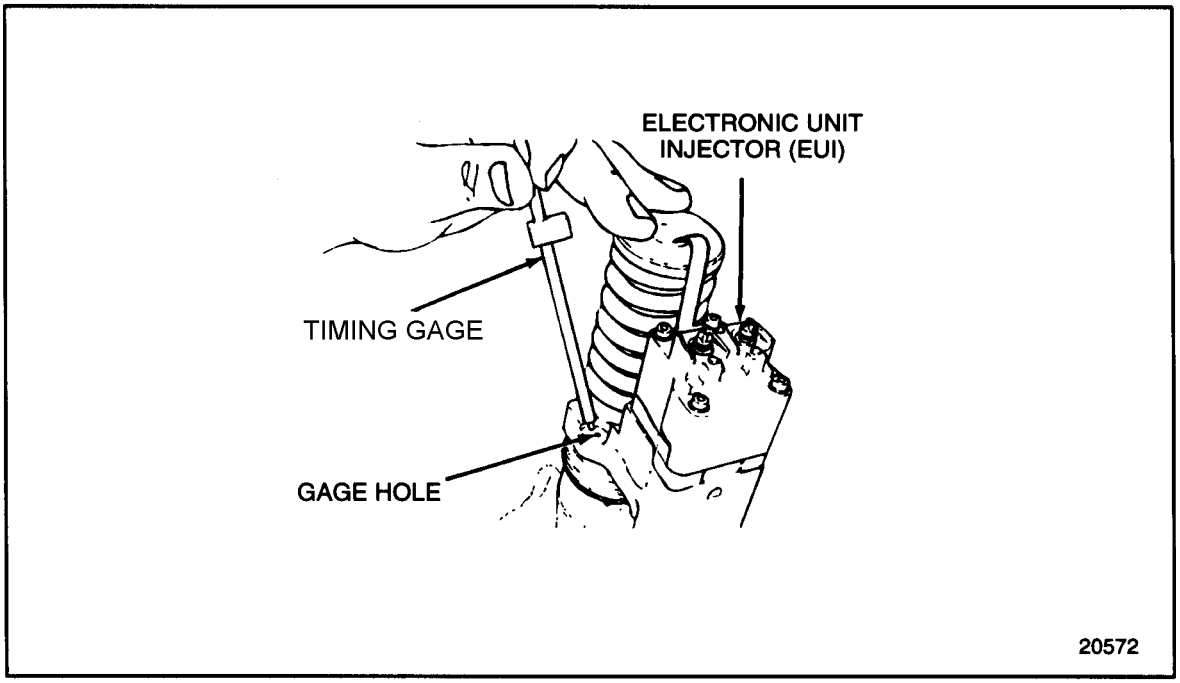

Figure 16-3 Timing Gauge

NOTE:
Be sure the height gage seats on the machined surface with the tip in the pilot hole. Foreign material in the pilot hole or on the machined surface may prevent accurate setting of the injector height.

To determine if improper valve clearance, injector height or both are causing the cylinder to misfire, perform the following preliminary step 1through step 3and repeat step 4 through step 9 for each cylinder to determine if worn or damaged lobes or rollers are causing the engine to misfire:

1. Disconnect starting power for engine.
2. Remove the valve rocker cover(s); for one-piece refer to section 1.6.2, for two-piece refer to section 1.6.3, for three-piece refer to section 1.6.5.
3. Insert a 3/4 in. drive breaker bar or ratchet into the square hole in the center of the crankshaft pulley.

 Copyright © 2004 DETROIT DIESEL CORPORATION

4. Bar the engine over and inspect camshaft and rollers for wear or damage. Stop engine rotation when any one of the injector followers has just begun its downward stroke; see Figure 16-4.

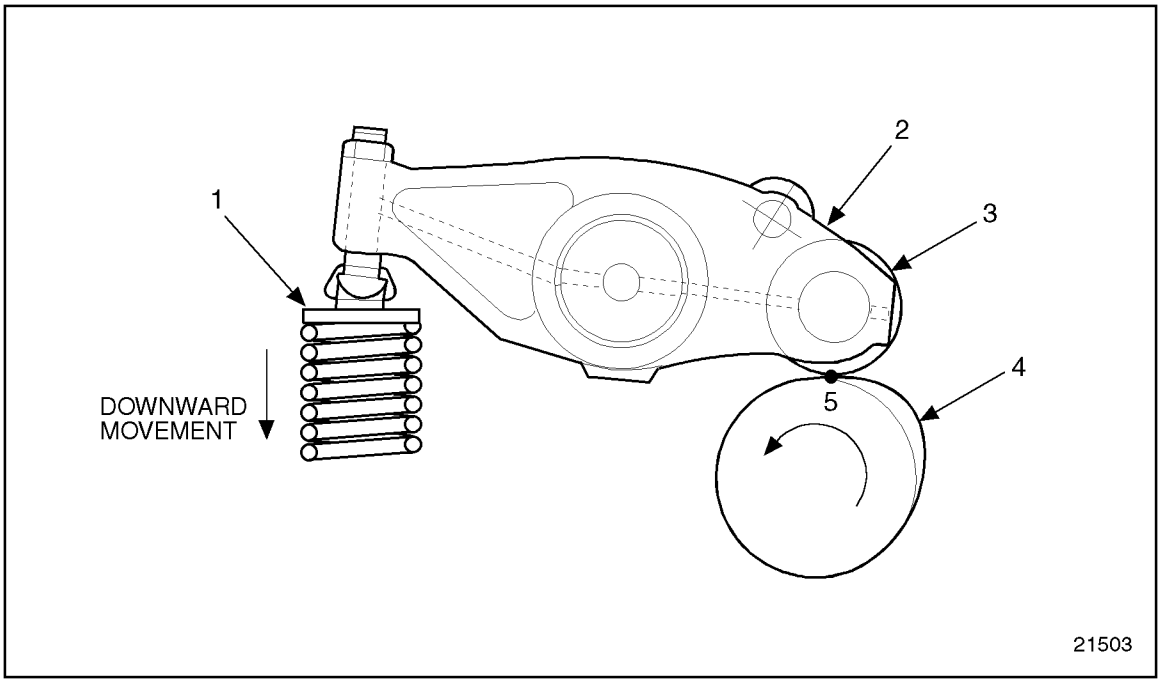

1. Injector Follower
2. Injector Rocker Arm Assembly
3. Injector Roller
4. Injector Cam Lobe
5. Point on the Camshaft Lobe that First Produces Downward Motion of the Injector Follower

Figure 16-4 Injector Followers Downward Stroke

[a] If damage is found on the camshaft lobes or rollers, stop this procedure and replace damaged components as necessary; refer to section 1.24.2. Once complete, refer to section 16.4.1.1.

[b] If no damage was found to camshaft or rollers, continue with task.

(Rev. 2004) *All information subject to change without notice.*
6SE483 0401 Copyright © 2004 DETROIT DIESEL CORPORATION

5. Using timing chart, see Figure 16-5, determine if the intake valve clearances are acceptable (listed in Table 16-1), by inserting a feeler gage between the tip of the intake valve stem and the button; see Figure 16-6.

   [a] If the intake valve stem clearance is between 0.127 - 0.280 mm (0.005 -0.011 in.), step 6.

   [b] If the intake valve stem clearance is not between 0.127 - 0.280 mm (0.005 -0.011 in.), reset the intake valve(s) to 0.203 mm (0.008 in.); refer to section 16.4.1, step 1.

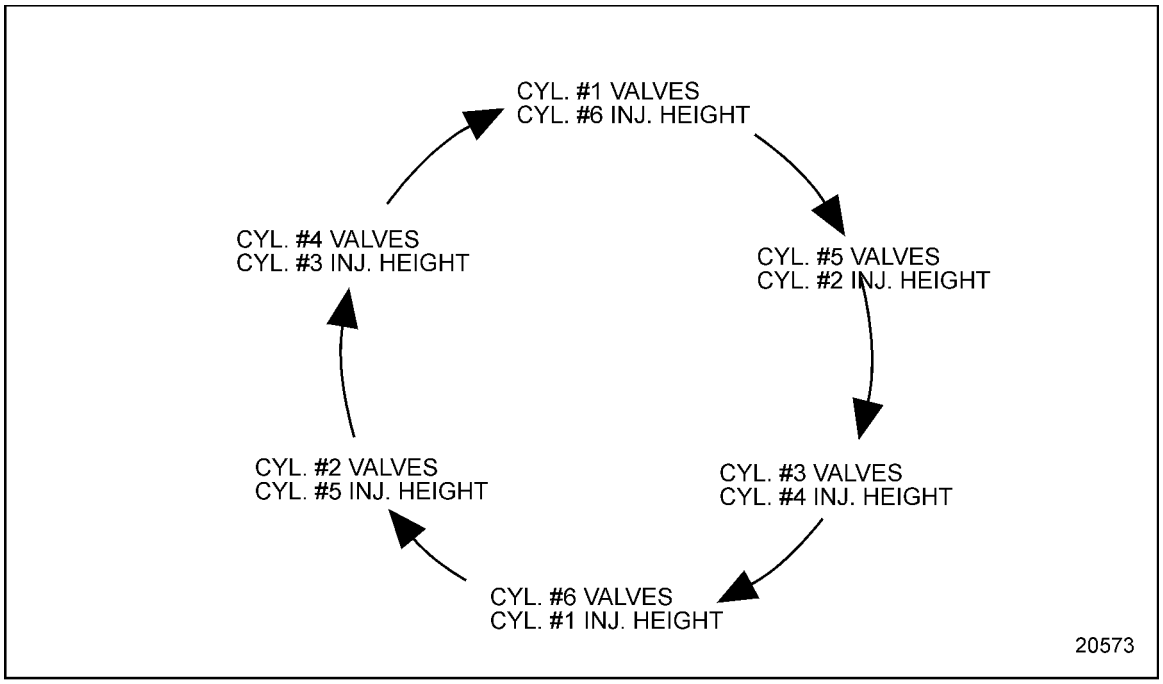

Figure 16-5 Timing Circle Chart

 Copyright © 2004 DETROIT DIESEL CORPORATION

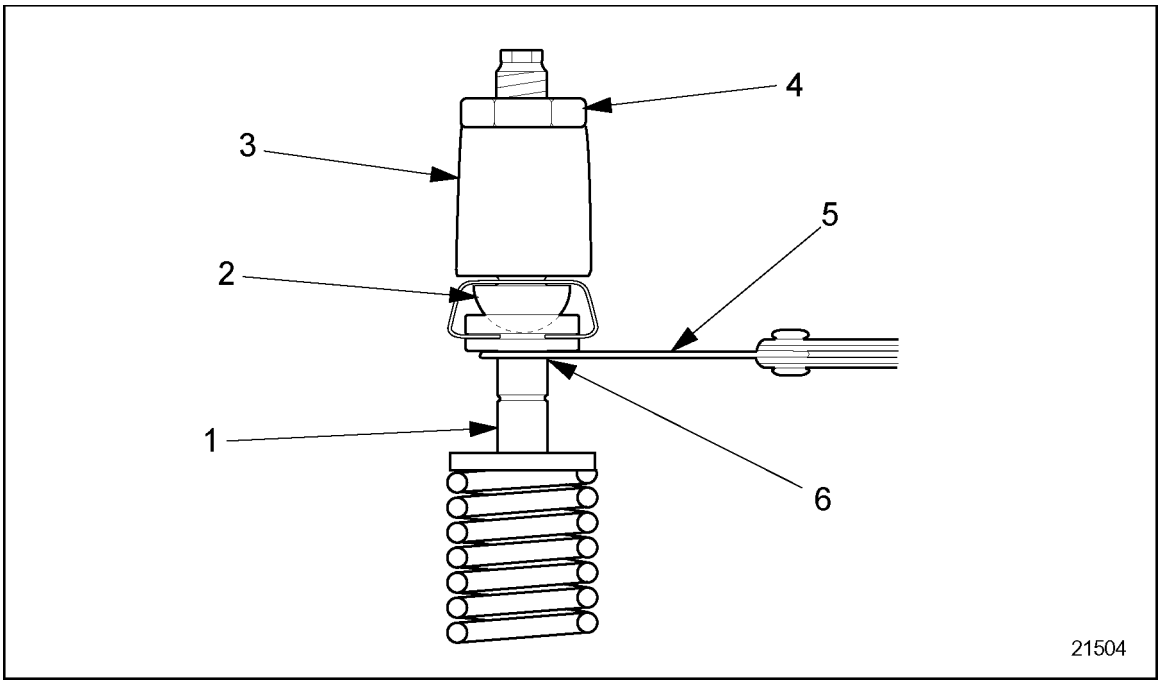

1. Intake Valve
2. Valve Button
3. Intake Rocker Arm Assembly
4. Locknut
5. Feeler Gage
6. Tip of Intake Valve

Figure 16-6 Intake Valve Clearance

(Rev. 2004) *All information subject to change without notice.*
6SE483 0401 Copyright © 2004 DETROIT DIESEL CORPORATION

Settings and Models	Acceptable Range	Recommended Setting
Injector HeightsDDEC I and II (6067GT40, 6067WT40, 6067WU40, 6067GU40, 6063WU00, 6063GU00, 6067WU60, 6067GU60, and 6067GU91)	77.9–78.4 mm (3.068–3.088 in.)	78.2 mm (3.078 in.)
Injector HeightsDDEC III (6067WK60, 6067WK28, 6067GK60, 6067GK28, 6063WK60, 6063WK28, 6063GK05 6063GK60, and 6063GK28)	2.992–3.112 mm (2.992–3.112 in.)	78.8 mm (3.102 in.)
Intake Valve Clearance	0.127 - 0.280 mm (0.005. - 0.011 in.)	0.203 mm (0.008 in.)
Exhaust Valve Clearance "U" (6067GT40, 6067WT40, 6067WU40, 6067GU40, 6063WU00, 6063GU00)	0.432 - 0.054 mm (0.017 - 0.023 in.)	0.508 mm (0.020 in.)
Exhaust Valve Clearance "H"(6067WU60, 6067GU60, 6067WK60, 6067GK60, 6067GK28, 6067WK28 6067GU91, 6063WU60, 6063GK05, 6063GK32, 6063GK60, 6063GU41, 6063GU60, 6063WK32, 6063WK60, 6063WU00, 6063WU41, 6063GU00)	0.584 - 0.736 mm (0.023 - 0.029 in.)	0.660 mm (0.026 in.)

Table 16-1 Valve Clearance and Injector Height Settings

6. Using timing chart, see Figure 16-5, determine if the exhaust valve clearances are acceptable, (listed in Table 16-1) by inserting a feeler gage between the tip of the exhaust valve stem and the button; see Figure 16-7.

   [a] For exhaust valves with a machined groove between the rotator and tip, the exhaust valve stem clearance should be between 0.584 - 0.736 mm (0.023 -0.029 in.). If the exhaust valve stem clearance is between 0.584 - 0.736 mm (0.023 -0.029 in.), proceed to step 7For exhaust valves without a machined groove between the rotator and tip, the exhaust valve stem clearance should be between 0.432 - 0.584 mm (0.017 -0.023 in.). If the exhaust valve stem clearance is between 0.432 - 0.584 mm (0.017 -0.023 in.), perform to step 7or step 8.

   [b] If the exhaust valve stem clearance is not between 0.584 - 0.736 mm (0.023 -0.029 in.) for exhaust valves with a machined groove between the rotator and tip, reset the valve(s) to 0.660 mm (0.026 in.); refer to step 7 or step 8.

 Copyright © 2004 DETROIT DIESEL CORPORATION

[c] If the exhaust valve stem clearance is not between 0.432 - 0.584 mm (0.017 -0.023 in.) for exhaust valves without a machined groove between the rotator and tip, reset the valve(s) to 0.508 mm 0.020 in.); refer to section 16.4.1. step 2.

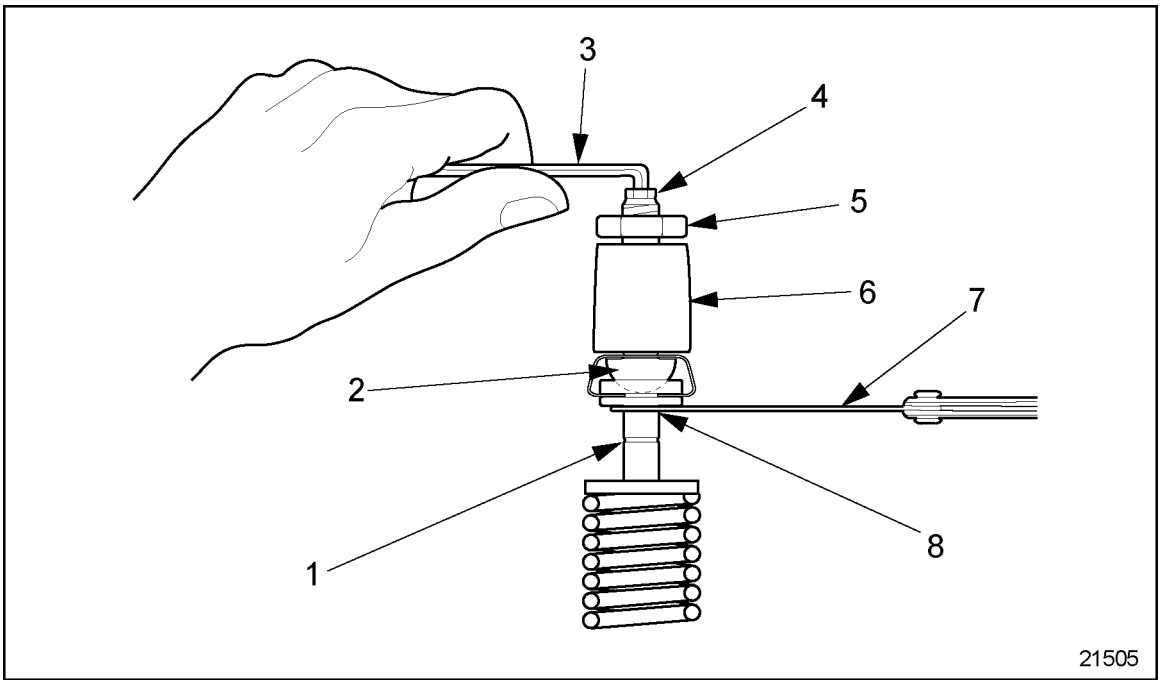

1. Location of Identification Groove
2. Valve Button
3. Allen Wrench
4. Adjusting Screw
5. Locknut
6. Exhaust Rocker Arm Assembly
7. Feeler Gage
8. Tip of Exhaust Valve

Figure 16-7 Exhaust Valve Clearance

(Rev. 2004) *All information subject to change without notice.*
6SE483 0401 Copyright © 2004 DETROIT DIESEL CORPORATION

7. If troubleshooting a DDEC III/IV engine, place the small end of J 39697 in the hole provided in the injector body, with the flat of the gage toward the fuel injector plunger; see Figure 16-8.

   [a] If the tool is flush against the follower, the injector height is acceptable; refer to step 9.

   [b] If the tool is not flush, adjust injector height; refer to section 16.4.1, step 3

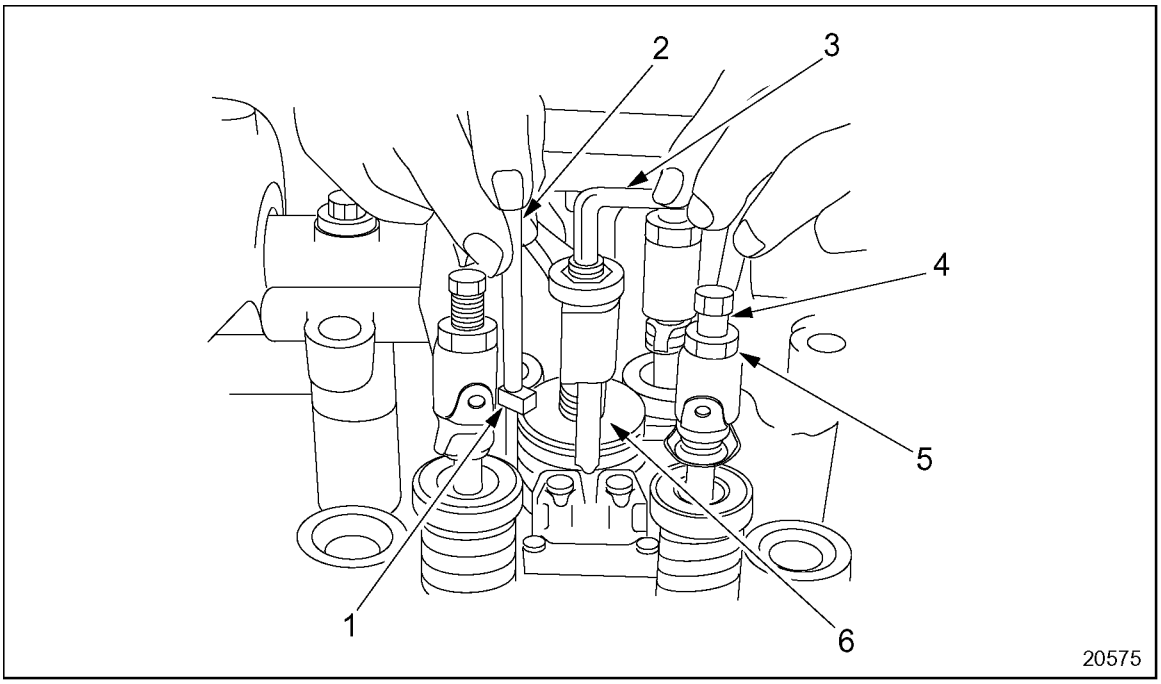

1. Height Gage Flag
2. Height Gage
3. 3/16 in. Allen Wrench
4. Adjusting Screw
5. Locknut
6. Fuel Injector Follower

Figure 16-8 Fuel Injector Adjustment

8. If troubleshooting a DDEC I or II engine, place the small end of J 35637-A in the hole provided in the injector body, with the flat of the gage toward the fuel injector plunger; see Figure 16-8.

   [a] If the tool is flush against the follower, the injector height is acceptable; refer to step 9

   [b] If the tool is not flush, adjust injector height; refer to section 16.4.1, step 3

9. Bar the engine over, clockwise, until the fuel injector for the next cylinder begins its downward stroke; see Figure 16-4. Repeat steps 5 through step 8 and repeat until all six fuel injectors and sets of valves have been checked and reset as necessary. When all cylinders have been checked, refer to section 16.4.1, step 4

 Copyright © 2004 DETROIT DIESEL CORPORATION

16.4.1 Improper Valve Clearance or Injector Height Repair

Perform the following steps to repair improper fuel injector height, intake valve clearance, and exhaust valve clearance.

NOTE:
Using the steps below, it will be necessary to bar the engine over only two complete revolutions. Three cylinders will be adjusted for valves, and three cylinders will be adjusted for injectors on each revolution.

If required, remove Jake Brake® housing necessary to provide access for repair; refer to section 1.30.2.

NOTICE:
Never set the valves and injector of the same cylinder at the same time. Doing this will result in engine damage.

1. Adjust the intake valve clearances as follows:
   [a] Insert a 0.203 mm (0.008 in.) feeler gage between the tip of one valve stem and the valve button; see Figure 16-9.
   [b] Loosen the locknut, and turn the adjusting set screw until the feeler gage produces a snug, smooth pull between the intake valve stem and valve button; see Figure 16-9.

(Rev. 2004) *All information subject to change without notice.*
6SE483 0401 Copyright © 2004 DETROIT DIESEL CORPORATION

[c] Torque the locknut to 41 - 47 N·m (30 - 35 lb·ft) and remove the feeler gage. Reinsert the feeler gage to ensure that the adjustment did not change when the locknut was tightened. Readjust as necessary.

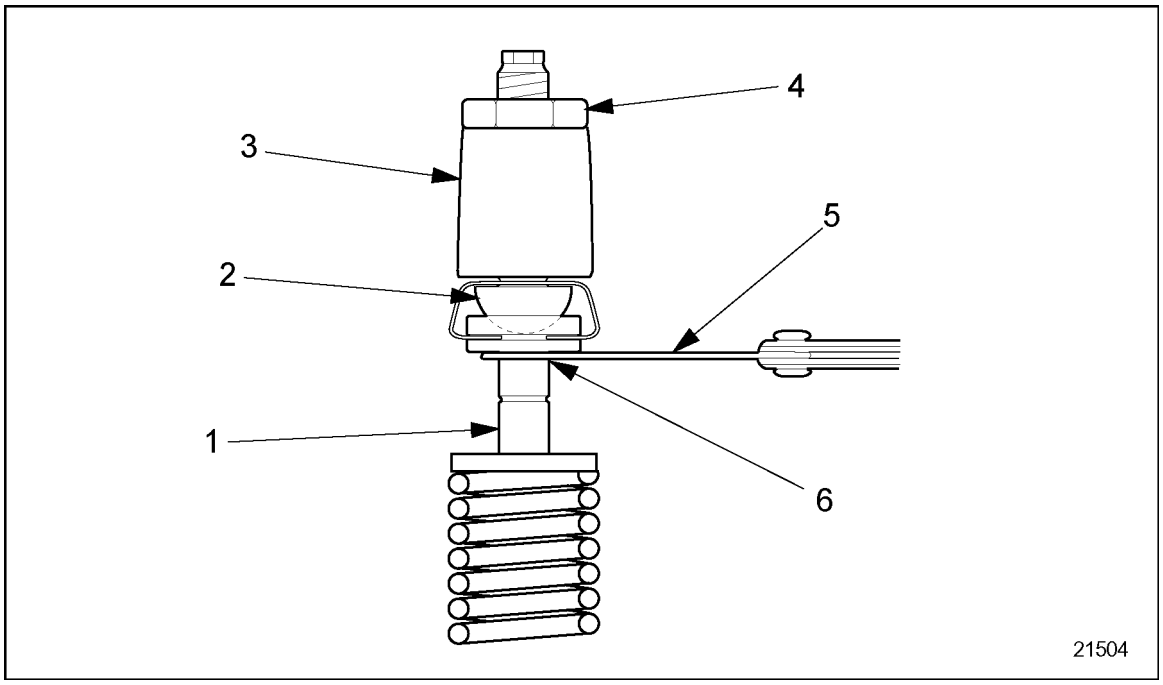

1. Intake Valve
2. Valve Button
3. Intake Rocker Arm Assembly
4. Locknut
5. Feeler Gauge
6. Tip of Intake Valve

Figure 16-9 Measurement of Intake Valve Clearance

2. Perform the following steps to adjust the exhaust valve clearances:

   [a] Insert a 0.660 mm (0.026 in.) feeler gage for valves with a machined groove between the tip of the valve stem and the valve button. Insert a 0.508 mm (0.020 in.) feeler gage for valves without machined groove; see Figure 16-7.

   [b] Loosen the locknut, and turn the adjusting set screw until the feeler gage produces a snug, smooth pull between the exhaust valve stem and the valve button.

   [c] Torque the locknut to 41 - 47 N·m (30 - 35 lb·ft) and remove the feeler gage. Reinsert the feeler gage to ensure that the adjustment did not change when the locknut was tightened. Readjust as necessary.

 Copyright © 2004 DETROIT DIESEL CORPORATION

3. Perform the following steps to adjust fuel injector heights.
   [a] For DDEC III/IV engines, place the small end of the height gage, J 39697, in the hole provided in the fuel injector body, with the flat of the gage toward the fuel injector plunger; see Figure 16-3 and proceed to step 3[c].
   [b] For DDEC I or II engines place the small end of the height gage, J 35637–A, in the hole provided in the fuel injector body, with the flat of the gage toward the fuel injector plunger.
   [c] Loosen the locknut and turn the adjusting set screw until the extended part (flag) of the gage will just pass over the top of the injector follower. A snug feel is recommended. The objective is to adjust all six injectors to the same feel; see Figure 16-9.
   [d] Torque the locknut to 41 - 47 N·m (30 - 35 lb·ft).
   [e] Check the adjustment with the height gage, J 39697 (DDEC III/IV engines) J 35637-A (DDEC I or II engines), and if necessary, readjust the set screw.
4. Install the valve rocker cover(s); refer to section 1.6.7.
5. Install the Jake Brakes® if removed for repair, refer to section 1.30.5.
6. Reconnect starting power to the engine.
7. Verify repair of valve clearance or injector height setting. Refer to section 16.4.1.1.

(Rev. 2004) *All information subject to change without notice.*
6SE483 0401 Copyright © 2004 DETROIT DIESEL CORPORATION

16.4.1.1 Verification of Repair for Improper Valve Clearance or Injector Height Setting

Perform the following steps to determine if valve clearance or injector height adjustment resolved the misfiring cylinder condition:

CAUTION:

To avoid injury before starting and running the engine, ensure the vehicle is parked on a level surface, parking brake is set, and the wheels are blocked.

CAUTION:

Diesel engine exhaust and some of its constituents are known to the State of California to cause cancer, birth defects, and other reproductive harm.

- ☐ **Always start and operate an engine in a well ventilated area.**
- ☐ **If operating an engine in an enclosed area, vent the exhaust to the outside.**
- ☐ **Do not modify or tamper with the exhaust system or emission control system.**

1. Start the engine.
2. Run the engine at 1000 r/min.
3. Listen for misfiring cylinder.
   [a] If the engine is not misfiring, shut down the engine. No further troubleshooting is required.
   [b] If the engine is misfiring, shut down the engine and check for faulty fuel injector; refer to section 16.5.

 Copyright © 2004 DETROIT DIESEL CORPORATION

16.5 FAULTY FUEL INJECTOR

To determine if a faulty fuel injector is causing the cylinder to misfire, perform the following steps:

1. Install DDL adaptor to the data cable and plug the adaptor into the DDL connector in the vehicle; refer to OEM guidelines.

CAUTION:

To avoid injury before starting and running the engine, ensure the vehicle is parked on a level surface, parking brake is set, and the wheels are blocked.

CAUTION:

Diesel engine exhaust and some of its constituents are known to the State of California to cause cancer, birth defects, and other reproductive harm.

- ☐ **Always start and operate an engine in a well ventilated area.**
- ☐ **If operating an engine in an enclosed area, vent the exhaust to the outside.**
- ☐ **Do not modify or tamper with the exhaust system or emission control system.**

2. Start the engine.
3. >From the DDEC III/IV Select Menu, scroll to select ENGINE and press the ENTER key.
4. Scroll to FUEL INJECTOR INFO (CUTOUT) and press the ENTER key.
5. Scroll to select NEW TEST and press the ENTER key.
6. Scroll to select RPM SETTING FOR CCO TEST NORMAL and scroll to select 1000 and press the ENTER key.
7. Scroll to select AUTO and press the ENTER key. Wait for END OF TEST.

NOTE:
If an injector cannot be cutout, you will see an ERROR message. Press FUNC to exit the cylinder cutout function, press the FUNC key.

(Rev. 2004) *All information subject to change without notice.*
6SE483 0401 Copyright © 2004 DETROIT DIESEL CORPORATION

8. Scroll the list to review the results of the cylinder cutout test. To find suspect injectors, look for a cylinder with a value that is within 0.2 degrees of the NO CUTOUT PULSE WIDTH, by comparing the CUTOUT PULSE WIDTH values to the NO CUTOUT PULSE WIDTH values.
   [a] If any CUTOUT PULSE WIDTH values are within 0.2 degrees of the NO CUTOUT PULSE WIDTH, shut down the engine and refer to section 16.5.1.
   [b] If any CUTOUT PULSE WIDTH values are not within 0.2 degrees of the NO CUTOUT PULSE WIDTH, shut down the engine and refer to section 16.6.

16.5.1 Faulty Fuel Injector Repair

Perform the following steps for faulty fuel injector assembly(s):

1. Remove and replace injector assembly(s) whose values are within 0.2 degrees of the NO CUTOUT PULSE WIDTH; refer to section 2.3.2.
2. Verify replaced injector assembly(s), refer to section 16.5.1.1.

16.5.1.1 Verification of Repair for Faulty Fuel Injector

Perform the following steps to determine if the replaced fuel injector(s) resolved the misfiring cylinder condition:

1. Refer to section 16.5 for the exhaust caution before preceeding. Start the engine.
2. Run the engine speed up to the occurrence of the misfiring.
3. Listen for misfiring cylinder.
   [a] If the engine is not misfiring, shut down the engine. No further troubleshooting is required.
   [b] If the engine is misfiring, shut down the engine and check for a faulty electronic control module (ECM); refer to section 16.6.

 Copyright © 2004 DETROIT DIESEL CORPORATION

16.6 FAULTY ELECTRONIC CONTROL MODULE

To determine if a faulty electronic control module (ECM) is causing the cylinder to misfire, perform the following:

NOTE:
Carefully disengage the lock tab on the power harness and injector harness connectors when removing.

1. Remove the thru-bolts holding the ECM to the engine; refer to section 2.19.2.
2. Remove the ECM from the engine and tag the ECM for core return.
3. Obtain a new reprogrammed ECM for the engine you are troubleshooting.
4. Inspect the ECM isolators for any damage. Replace if necessary, refer to section 2.19.3.
5. Install the ECM to the engine using thru-bolts; refer to section 2.19.3.
6. Torque the ECM thru-bolts to 23 - 27 N·m (17 - 20 lb·ft).
7. Torque the ECM connector hold-down screws to 24 - 30 N·m (21 - 26 lb·in.).

16.6.1 Faulty ECM Repair

No repair authorized for ECM.

(Rev. 2004) *All information subject to change without notice.*
6SE483 0401 Copyright © 2004 DETROIT DIESEL CORPORATION

16.6.1.1 Verification of Repair for Faulty ECM

Perform the following steps to determine if the new ECM resolved the misfiring cylinder condition:

CAUTION:

To avoid injury before starting and running the engine, ensure the vehicle is parked on a level surface, parking brake is set, and the wheels are blocked.

CAUTION:

Diesel engine exhaust and some of its constituents are known to the State of California to cause cancer, birth defects, and other reproductive harm.

- ☐ **Always start and operate an engine in a well ventilated area.**
- ☐ **If operating an engine in an enclosed area, vent the exhaust to the outside.**
- ☐ **Do not modify or tamper with the exhaust system or emission control system.**

1. Start the engine.
2. Run the engine speed up to the occurrence of the misfiring.
3. Listen for misfiring cylinder.
   [a] If the engine is not misfiring, shut down the engine. No further troubleshooting is required.
   [b] If the engine is misfiring, shut down the engine and check for worn or damaged valves and cylinder kits; refer to section 16.7.

 Copyright © 2004 DETROIT DIESEL CORPORATION

16.7 WORN OR DAMAGED VALVE OR CYLINDER KIT

Loss of compression in Series 60 engines may result from a variety of sources, including worn or broken fire or compression rings, holes in pistons, leaky valves, scored or worn cylinder walls, leaky or broken gaskets and cracked cylinder heads or cylinder liners. The detection and elimination of the cause or causes of cylinder pressure losses is vital to engine life and efficient operation. To assist the mechanic in effectively measuring the loss of cylinder pressure, and locating the source of abnormal leaks in individual cylinders, the following test procedure has been developed.

1. Move the vehicle requiring test to the chassis dynamometer; refer to OEM guidelines.
2. Disconnect air compressor; refer to section 10.1.5.

CAUTION:

To avoid injury before starting and running the engine, ensure the vehicle is parked on a level surface, parking brake is set, and the wheels are blocked.

CAUTION:

Diesel engine exhaust and some of its constituents are known to the State of California to cause cancer, birth defects, and other reproductive harm.

- ☐ **Always start and operate an engine in a well ventilated area.**
- ☐ **If operating an engine in an enclosed area, vent the exhaust to the outside.**
- ☐ **Do not modify or tamper with the exhaust system or emission control system.**

3. Start the engine.
4. Run the engine and bring the engine coolant temperature to normal operating range.
5. Run vehicle to full load and rated speed.
6. Attach a manometer calibrated to read in. H_2O, to the oil dipstick opening.
7. Measure and record crankcase pressure.
8. Shut down engine.
9. Remove the vehicle from the chassis dynamometer.

(Rev. 2004) *All information subject to change without notice.*
6SE483 0401 Copyright © 2004 DETROIT DIESEL CORPORATION

10. Review the crankcase pressure test results.
    [a] If the crankcase pressure was greater than 3 in. H_2O (.75 kPa); refer to section 16.7.1.
    [b] If the crankcase pressure was less than 3 in. H_2O (.75 kPa); perform a cylinder compression test.
11. Compare the cylinder compression test results to specifications.
    [a] If cylinder pressure is below specifications, refer to section 16.7.1.
    [b] If cylinder pressure is within specification, call Detroit Diesel Technical Service Group.

16.7.1 Worn or Damaged Valve or Cylinder Kit Repair

Perform the following steps for worn or damaged valve or cylinder kit:

1. Remove cylinder head; refer to section 1.2.2.
2. Inspect the cylinder head for worn or damaged valves; refer to section 1.2.3.1. For repair and replacement procedures refer to section 1.4.1.
3. Inspect the cylinder kit components for worn or damaged liners, refer to section 1.21.2.2; pistons or piston rings; refer to section 1.17.3.1.
4. Verification of repairs made to cylinder valve(s) or cylinder kit components is required; refer to section 16.7.1.1.

16.7.1.1 Verification of Repair for Worn or Damaged Valve or Cylinder Kit

Perform the following steps to determine if the repaired valve or cylinder kit resolved the misfiring cylinder condition:

1. Refer to section 16.7 for the exhaust caution before preceeding. Start the engine.
2. Run the engine speed up to the occurrence of the misfiring.
3. Listen for misfiring cylinder.
    [a] If the engine is not misfiring, no further troubleshooting is required.
    [b] If the engine is misfiring, call Detroit Diesel Technical Service Group.

 Copyright © 2004 DETROIT DIESEL CORPORATION

(Rev. 2004) All information subject to change without notice.
6SE483 0401 Copyright © 2004 DETROIT DIESEL CORPORATION

17 STARTING DIFFICULTY (ENGINE ROTATES)

Section		Page
17.1	ELECTRONIC CONTROL MODULE WIRING HARNESS	17-3
17.2	EMPTY FUEL TANK	17-6
17.3	LOW BATTERY VOLTAGE	17-7
17.4	CORRODED OR DAMAGED BATTERY TERMINALS	17-9
17.5	DEFECTIVE MAGNETIC SWITCH	17-10
17.6	DEFECTIVE STARTER	17-13
17.7	LOW CRANKING SPEED	17-15
17.8	FUEL SUPPLY VALVE	17-17
17.9	PLUGGED FUEL FILTER(S)	17-19
17.10	FUEL PUMP	17-21
17.11	AERATED FUEL	17-23
17.12	RESTRICTIVE AIR FILTER	17-25
17.13	LOW COMPRESSION	17-27

 Copyright © 2004 DETROIT DIESEL CORPORATION

17.1 ELECTRONIC CONTROL MODULE WIRING HARNESS

To determine if the electronic control module (ECM) wire harness is causing starting difficulty, perform the following steps:

1. Turn the ignition switch to the on position.
2. Install the Diagnostic Data Link (DDL) adaptor to the data cable and plug the adaptor into the DDL connector in the vehicle; refer to OEM guidelines.
3. Determine if ECM data is being received by the DDR; refer to OEM guidelines.
   [a] If no data is being received by the DDR, check for intermittent code or a fault and no codes in the Detroit Diesel DDEC Single ECM, *Troubleshooting Guide*, (6SE497).
   [b] If data is being received by the DDR, check vehicle circuit breakers or fuses; refer to section 17.1.1.

17.1.1 Vehicle Circuit Breakers or Fuses Check

To determine if the vehicle circuit breakers are causing starting difficulty, perform the following steps:

1. Visually check ECM circuit breakers or fuses and determine if circuit breaker(s) or fuse(s) are tripped or blown; refer to OEM guidelines.
   [a] If circuit breakers tripped, determine cause and repair or replace as necessary; refer to OEM guidelines. Perform validation; refer to section 17.1.3.1.
   [b] If circuit breakers are not tripped, measure the voltage at the ECM power harness; refer to section 17.1.2.

 Copyright © 2004 DETROIT DIESEL CORPORATION

17.1.2 ECM Power Harness Voltage Test

To determine if the electronic control module power harness is causing circuit breakers to be tripped or blown, perform the following steps:

1. Turn ignition off, if required.
2. Disconnect the 5-way power harness connector; see Figure 17-1.

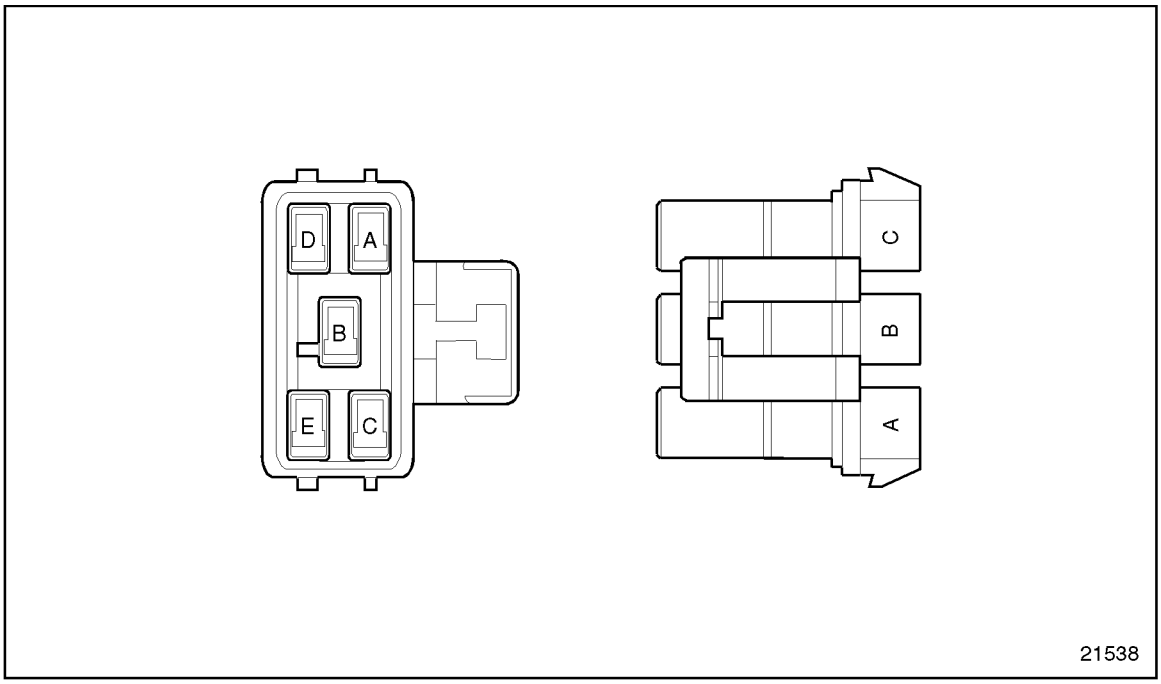

Figure 17-1 5-Way ECM Power Harness Connector

3. Measure and record voltage from socket "A" (red lead) of 5-way power harness connector to a good ground (black lead).
4. Measure and record voltage from socket socket "C" (red lead) to a good ground (black lead).
5. Review the measured voltage readings.
   [a] If the voltage measured is less than 10 volts, inspect and repair power harness; refer to section 17.1.3.
   [b] If the voltage measured is greater than 10 volts, check for low battery voltage; refer to section 17.3.

(Rev. 2004) *All information subject to change without notice.*
6SE483 0401 Copyright © 2004 DETROIT DIESEL CORPORATION

17.1.3 Power Harness Repair

Perform the following steps to repair power harness:

1. Repair damage to the power harness.
2. Verify repair of the power harness; refer to section 17.1.3.1.

17.1.3.1 Test Engine with Repaired Power Harness

Perform the following steps to determine if the repair resolved starter difficulty:

CAUTION:

To avoid injury before starting and running the engine, ensure the vehicle is parked on a level surface, parking brake is set, and the wheels are blocked.

CAUTION:

Diesel engine exhaust and some of its constituents are known to the State of California to cause cancer, birth defects, and other reproductive harm.

- ☐ **Always start and operate an engine in a well ventilated area.**
- ☐ **If operating an engine in an enclosed area, vent the exhaust to the outside.**
- ☐ **Do not modify or tamper with the exhaust system or emission control system.**

1. Attempt to start and run the engine.
   [a] If the engine starts and runs, no further troubleshooting is required. Shut down the engine.
   [b] If the engine fails to start and run, check for empty fuel tank; refer to section 17.2.

 Copyright © 2004 DETROIT DIESEL CORPORATION

17.2 EMPTY FUEL TANK

To determine if an empty fuel tank is causing starting difficulty, perform the following steps:

1. Determine the amount of fuel in fuel tank; refer to OEM guidelines.
   [a] If fuel is at recommended level, check for a weak battery; refer to section 17.3.
   [b] If fuel is below recommended level, refer to section 17.2.1.

17.2.1 Low Fuel Level Resolution

Perform the following steps to resolve low fuel level:

1. Fill fuel tank to full; refer to OEM guidelines.
2. Verify fuel tank refill; refer to section 17.2.1.1.

17.2.1.1 Test Engine with Filled Tank

Perform the following steps to determine if a filled fuel tank resolved starting difficulty:

CAUTION:

To avoid injury before starting and running the engine, ensure the vehicle is parked on a level surface, parking brake is set, and the wheels are blocked.

CAUTION:

Diesel engine exhaust and some of its constituents are known to the State of California to cause cancer, birth defects, and other reproductive harm.

- ☐ **Always start and operate an engine in a well ventilated area.**
- ☐ **If operating an engine in an enclosed area, vent the exhaust to the outside.**
- ☐ **Do not modify or tamper with the exhaust system or emission control system.**

1. Attempt to start and run the engine.
   [a] If the engine starts and runs, no further troubleshooting is required. Shut down the engine.
   [b] If the engine fails to start and run, check the battery; refer to section 17.3.

(Rev. 2004) *All information subject to change without notice.*
6SE483 0401 Copyright © 2004 DETROIT DIESEL CORPORATION

17.3 LOW BATTERY VOLTAGE

To determine if a weak battery is causing starting difficulty, perform the following steps:

⚠ CAUTION:

To avoid injury from battery explosion or contact with battery acid, work in a well-ventilated area, wear protective clothing, and avoid sparks or flames near the battery. Always establish correct polarity before connecting cables to the battery or battery circuit. If you come in contact with battery acid:

- ☐ **Flush your skin with water.**
- ☐ **Apply baking soda or lime to help neutralize the acid.**
- ☐ **Flush your eyes with water.**
- ☐ **Get medical attention immediately.**

1. Measure the battery voltage; refer to OEM guidelines.
   [a] If voltage is between 10.5 - 14 volts (21 - 26 volts for a 24 volt system), check the terminals; refer to section 17.4.
   [b] If voltage is less than 10.5 volts (21 volts for a 24 volt system), replacement is necessary; refer to section 17.3.1.

17.3.1 Battery Replacement

Perform the following steps for battery repair:

1. Remove and replace the battery; refer to OEM guidelines.
2. Verify battery replacement; refer to section 17.3.1.1.

 Copyright © 2004 DETROIT DIESEL CORPORATION

17.3.1.1 Test Engine with Replaced Battery

Perform the following steps to determine if the battery replacement resolved starting difficulty:

CAUTION:

To avoid injury before starting and running the engine, ensure the vehicle is parked on a level surface, parking brake is set, and the wheels are blocked.

CAUTION:

Diesel engine exhaust and some of its constituents are known to the State of California to cause cancer, birth defects, and other reproductive harm.

- ☐ **Always start and operate an engine in a well ventilated area.**
- ☐ **If operating an engine in an enclosed area, vent the exhaust to the outside.**
- ☐ **Do not modify or tamper with the exhaust system or emission control system.**

1. Attempt to start and run the engine.
   [a] If the engine starts and runs, no further troubleshooting is required. Shut down the engine.
   [b] If the engine fails to start and run, check the terminals; refer to section 17.4.

(Rev. 2004) *All information subject to change without notice.*
6SE483 0401 Copyright © 2004 DETROIT DIESEL CORPORATION

17.4 CORRODED OR DAMAGED BATTERY TERMINALS

To determine if corroded or damaged terminals is causing starting difficulty:

1. Visually inspect terminals for corrosion or damage.
   [a] If corrosion or damage are not found, check the magnetic switch; refer to section 17.5.
   [b] If corrosion or damage are found, repair is necessary; refer to section 17.4.1.

17.4.1 Corroded or Damaged Battery Terminal Repair

Perform the following steps to repair corroded or damaged battery terminals:

1. Repair or replace any corroded or damaged terminals; refer to OEM guidelines.
2. Verify repair of corroded or damaged terminals; refer to section 17.4.1.1.

17.4.1.1 Test with Repaired Battery Terminals

Perform the following steps to determine if the repair resolved starting difficulty:

CAUTION:

To avoid injury before starting and running the engine, ensure the vehicle is parked on a level surface, parking brake is set, and the wheels are blocked.

CAUTION:

Diesel engine exhaust and some of its constituents are known to the State of California to cause cancer, birth defects, and other reproductive harm.

- ☐ **Always start and operate an engine in a well ventilated area.**
- ☐ **If operating an engine in an enclosed area, vent the exhaust to the outside.**
- ☐ **Do not modify or tamper with the exhaust system or emission control system.**

1. Attempt to start and run the engine.
   [a] If the engine starts and runs, no further troubleshooting is required. Shut down the engine.
   [b] If the engine fails to start and run, check the magnetic switch; refer to section 17.5.

 Copyright © 2004 DETROIT DIESEL CORPORATION

17.5 DEFECTIVE MAGNETIC SWITCH

To determine if a defective magnetic switch is causing starting difficulty:

CAUTION:

To avoid injury before starting and running the engine, ensure the vehicle is parked on a level surface, parking brake is set, and the wheels are blocked.

CAUTION:

Diesel engine exhaust and some of its constituents are known to the State of California to cause cancer, birth defects, and other reproductive harm.

- ☐ **Always start and operate an engine in a well ventilated area.**
- ☐ **If operating an engine in an enclosed area, vent the exhaust to the outside.**
- ☐ **Do not modify or tamper with the exhaust system or emission control system.**

1. Start engine.

(Rev. 2004) *All information subject to change without notice.*
6SE483 0401 Copyright © 2004 DETROIT DIESEL CORPORATION

⚠ CAUTION:

To avoid injury from electrical shock, use care when connecting battery cables. The magnetic switch studs are at battery voltage.

2. Clamp a heavy gauge battery jumper cable between the two large studs of the magnetic switch. See Figure 17-2.

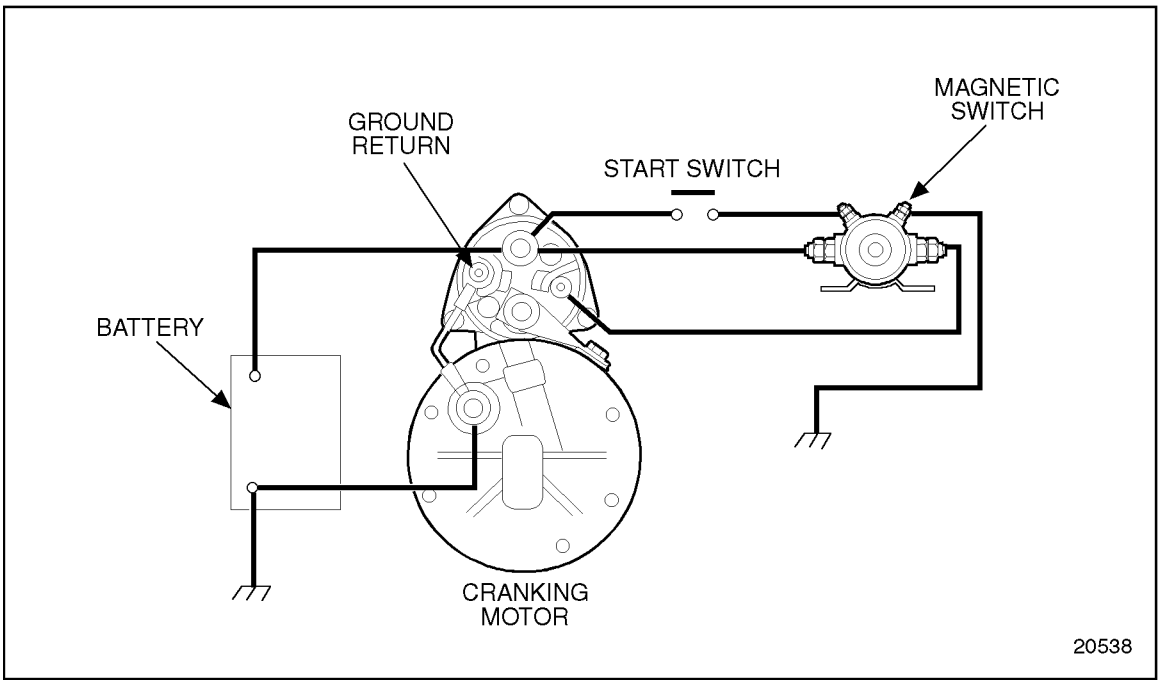

Figure 17-2 Basic Cranking Circuit

[a] If the engine cranked with the jumper cable in place, the magnetic switch must be replaced; refer to section 17.5.1.

[b] If the engine did not crank with the jumper cable in place, check the starter; refer to section 17.6.

 Copyright © 2004 DETROIT DIESEL CORPORATION

17.5.1 Magnetic Switch Replacement

Perform the following steps for magnetic switch replacement:

1. Replace the magnetic switch; refer to OEM guidelines.
2. Verify magnetic switch replacement; refer to section 17.5.1.1.

17.5.1.1 Test Engine with Replaced Magnetic Switch

Perform the following steps to determine if the magnetic switch replacement resolved starting difficulty:

1. Refer to section 17.5 for the exhaust catuion before preceeding. Attempt to start and run the engine.
   [a] If the engine starts and runs, no further troubleshooting is required. Shut down the engine.
   [b] If the engine fails to start and run, check the starter; refer to section 17.6.

(Rev. 2004) *All information subject to change without notice.*
6SE483 0401 Copyright © 2004 DETROIT DIESEL CORPORATION

17.6 DEFECTIVE STARTER

To determine if a defective starter is causing starting difficulty, perform the following steps:

1. Place the red lead of a voltmeter to the solenoid "BAT" terminal, see Figure 17-3.

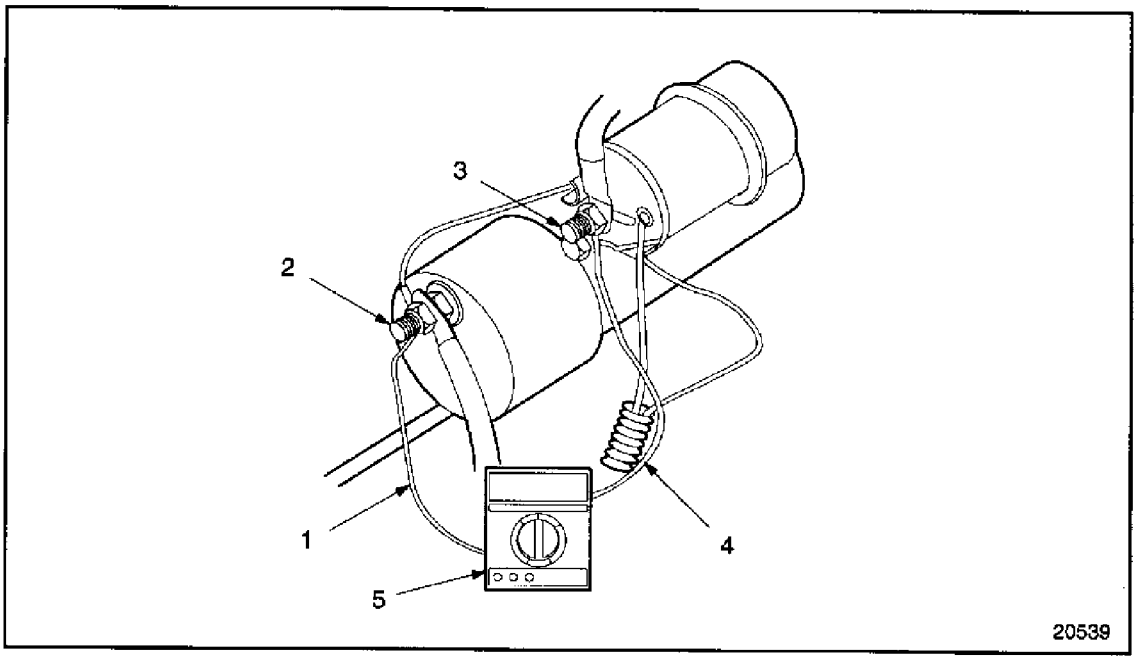

1. Black Voltmeter Lead
2. Starter Ground Terminal Lug
3. Red Voltmeter Lead
4. Harness Tube
5. Volt Ohm Meter

Figure 17-3 Cranking Motor Available Voltage Test

2. Place the black voltmeter lead to the starter ground terminal, see Figure 17-2.
3. Engage the starter switch.
4. View the voltage reading on the meter.
   [a] If the voltage is less than specification while cranking the engine, replacement is necessary; refer to section 17.6.1.
   [b] If the voltage is to specification while cranking the engine, check the cranking speed; refer to section 17.7.

17.6.1 Starter Replacement

Perform the following steps for starter replacement:

1. Replace the starter; refer to section 8.4.2.
2. Verify replacement of starter; refer to section 17.6.1.1.

 Copyright © 2004 DETROIT DIESEL CORPORATION

17.6.1.1 Test Engine with Replaced Starter

Perform the following steps to determine if the replaced starter resolved starting difficulty:

CAUTION:

To avoid injury before starting and running the engine, ensure the vehicle is parked on a level surface, parking brake is set, and the wheels are blocked.

CAUTION:

Diesel engine exhaust and some of its constituents are known to the State of California to cause cancer, birth defects, and other reproductive harm.

- ☐ **Always start and operate an engine in a well ventilated area.**
- ☐ **If operating an engine in an enclosed area, vent the exhaust to the outside.**
- ☐ **Do not modify or tamper with the exhaust system or emission control system.**

1. Attempt to start and run the engine.
   [a] If the engine starts and runs, no further troubleshooting is required. Shut down the engine.
   [b] If the engine fails to start and run, check the cranking speed; refer to section 17.7.

(Rev. 2004) *All information subject to change without notice.*
6SE483 0401 Copyright © 2004 DETROIT DIESEL CORPORATION

17.7 LOW CRANKING SPEED

To determine if low cranking speed is causing starting difficulty, perform the following steps:

1. Install a tachometer to the engine and record engine revolution while cranking the engine; refer to OEM for guidelines.
   [a] If the cranking speed is greater than 100 r/min, check the fuel supply valve; refer to section 17.8.
   [b] If the cranking speed is less than 100 r/min; refer to section 17.7.1.

17.7.1 Low Cranking Speed Repair

Perform the following steps for low cranking speed repair:

1. Drain the engine oil. Refer to section 13.13.1.
2. Remove oil filter(s). Refer to section 13.13.4.
3. Install new oil filter(s). Refer to section 13.13.14.
4. Refill the lubrication system with new oil. Refer to section 13.13.1.
5. Verify low cranking speed repair; refer to section 17.7.1.1.

 Copyright © 2004 DETROIT DIESEL CORPORATION

17.7.1.1 Test Engine with Replaced Oil

Perform the following steps to determine if the replaced oil resolved starting difficulty:

CAUTION:

To avoid injury before starting and running the engine, ensure the vehicle is parked on a level surface, parking brake is set, and the wheels are blocked.

CAUTION:

Diesel engine exhaust and some of its constituents are known to the State of California to cause cancer, birth defects, and other reproductive harm.

- ☐ **Always start and operate an engine in a well ventilated area.**
- ☐ **If operating an engine in an enclosed area, vent the exhaust to the outside.**
- ☐ **Do not modify or tamper with the exhaust system or emission control system.**

1. Attempt to start and run the engine.
   [a] If the engine starts and runs, no further troubleshooting is required. Shut down the engine.
   [b] If the engine fails to start and run, check the fuel supply valve; refer to section 17.8.

(Rev. 2004) *All information subject to change without notice.*
6SE483 0401 Copyright © 2004 DETROIT DIESEL CORPORATION

17.8 FUEL SUPPLY VALVE

To determine if the fuel supply valve is causing starting difficulty, perform the following steps:

1. Check that fuel supply valve is open; refer to OEM guidelines.
   [a] If the fuel supply valve is open, check the fuel filters; refer to section 17.9.
   [b] If the fuel supply valve is closed, repair is necessary; refer to section 17.8.1.

17.8.1 Fuel Supply Valve Repair

Perform the following steps for fuel supply valve repair:

1. Open the closed valve; refer to section 2.16.2.
2. Prime the fuel system; refer to section 11.1.6.
3. Verify fuel supply valve repair; refer to section 17.8.1.1.

 Copyright © 2004 DETROIT DIESEL CORPORATION

17.8.1.1 Test Engine with Fuel Supply Valve Open

Perform the following steps to determine if opening the fuel supply valve resolved starting difficulty:

CAUTION:

To avoid injury before starting and running the engine, ensure the vehicle is parked on a level surface, parking brake is set, and the wheels are blocked.

CAUTION:

Diesel engine exhaust and some of its constituents are known to the State of California to cause cancer, birth defects, and other reproductive harm.

- ☐ **Always start and operate an engine in a well ventilated area.**
- ☐ **If operating an engine in an enclosed area, vent the exhaust to the outside.**
- ☐ **Do not modify or tamper with the exhaust system or emission control system.**

1. Attempt to start and run the engine.
   [a] If the engine starts and runs, no further troubleshooting is required. Shut down the engine.
   [b] If the engine fails to start and run, check the fuel filters; refer to section 17.9.

(Rev. 2004) *All information subject to change without notice.*
6SE483 0401 Copyright © 2004 DETROIT DIESEL CORPORATION

17.9 PLUGGED FUEL FILTER(S)

To determine if a plugged fuel filters is causing starting difficulty, perform the following steps:

1. Disconnect the fuel line return hose from the fitting located at the fuel tank.
2. Place the opened end of fuel line into a five gallon container.

CAUTION:

To avoid injury before starting and running the engine, ensure the vehicle is parked on a level surface, parking brake is set, and the wheels are blocked.

CAUTION:

Diesel engine exhaust and some of its constituents are known to the State of California to cause cancer, birth defects, and other reproductive harm.

- ☐ **Always start and operate an engine in a well ventilated area.**
- ☐ **If operating an engine in an enclosed area, vent the exhaust to the outside.**
- ☐ **Do not modify or tamper with the exhaust system or emission control system.**

3. Start the engine.
4. Run the engine at 1000 r/min.
5. Clock fuel rate for one minute.
6. Measure the amount of fuel flowed into the container.
   [a] If the fuel flow is greater than 1 gal/min (3.8 L/min), check for air in fuel; refer to section 17.11.
   [b] If the fuel flow is less than 1 gal/min (3.8 L/min), replace the fuel filters; refer to section 17.9.1.

 Copyright © 2004 DETROIT DIESEL CORPORATION

17.9.1 Plugged Fuel Filter(s) Replacement

Perform the following steps to replace fuel filter(s):

1. Replace the fuel filter; refer to section 13.13.14.
2. Test the engine to determine if starting has been improved; refer to section 17.9.1.1.

17.9.1.1 Test Engine with Replaced Fuel Filters

Perform the following steps to determine if the replaced fuel filters resolved starting difficulty:

1. Refer to section 17.9 for the exhaust caution before preceeding. Attempt to start and run the engine.
   [a] If the engine starts and runs, no further troubleshooting is required. Shut down the engine.
   [b] If the engine fails to start and run, check the fuel pump; refer to section 17.10.

(Rev. 2004) *All information subject to change without notice.*
6SE483 0401 Copyright © 2004 DETROIT DIESEL CORPORATION

17.10 FUEL PUMP

To determine if the fuel pump is causing starting difficulty, perform the following steps:

1. Insert a piece of wire through the pump flange drain hole, see Figure 17-4.

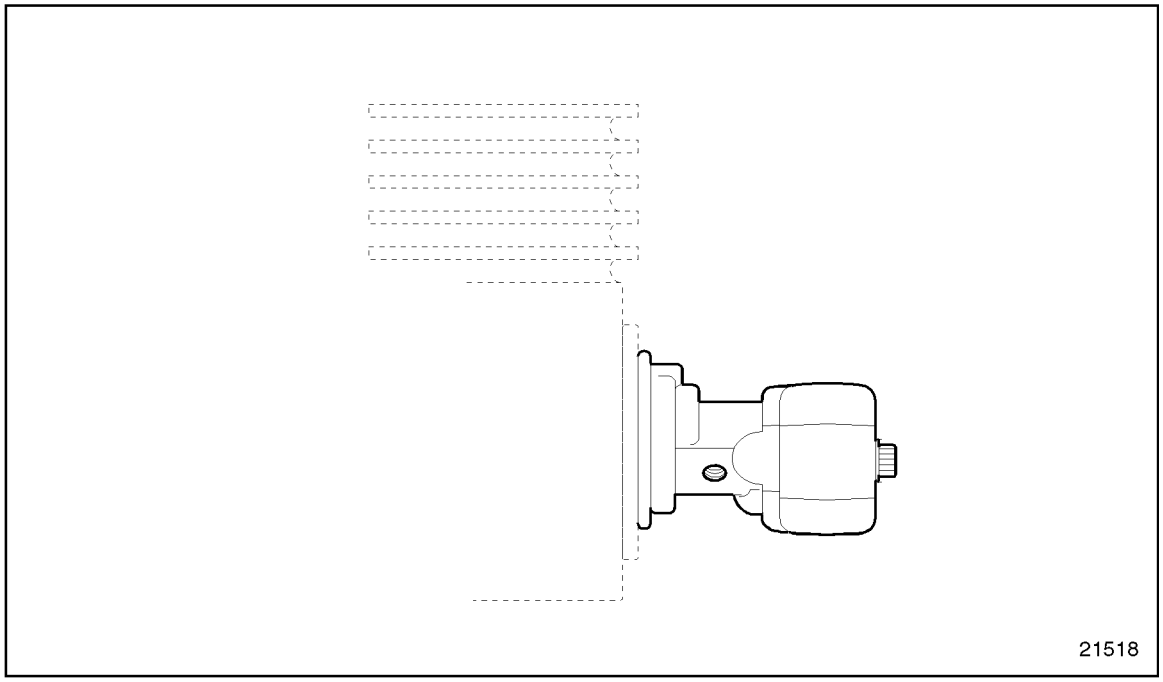

Figure 17-4 Fuel Pump Flange Drain Hole Location

2. Crank the engine momentarily and feel for wire vibration.
   [a] If the wire did not vibrate, determine if the drive hub or coupling should be replaced; refer to section 17.10.1.
   [b] If the wire did vibrate, check for aerated fuel. Refer to section 17.11.

17.10.1 Drive Hubs and Coupling Replacement

Perform the following steps for drive hub or coupling replacement:

1. Replace the drive hub or coupling; refer to section 2.9.
2. Test the engine to determine if starting has been improved; refer to section 17.10.1.1.

 Copyright © 2004 DETROIT DIESEL CORPORATION

17.10.1.1 Engine Test with Replaced Drive Hubs or Replaced Coupling

Perform the following steps to determine if replaced drive hubs or coupling resolved starting difficulty:

CAUTION:

To avoid injury before starting and running the engine, ensure the vehicle is parked on a level surface, parking brake is set, and the wheels are blocked.

CAUTION:

Diesel engine exhaust and some of its constituents are known to the State of California to cause cancer, birth defects, and other reproductive harm.

- ☐ **Always start and operate an engine in a well ventilated area.**
- ☐ **If operating an engine in an enclosed area, vent the exhaust to the outside.**
- ☐ **Do not modify or tamper with the exhaust system or emission control system.**

1. Attempt to start and run the engine.
   [a] If the engine starts and runs, no further troubleshooting is required. Shut down the engine.
   [b] If the engine fails to start and run, check for aerated fuel; refer to section 17.11.

(Rev. 2004) *All information subject to change without notice.*
6SE483 0401 Copyright © 2004 DETROIT DIESEL CORPORATION

17.11 AERATED FUEL

To determine if aerated fuel is causing starting difficulty, perform the following steps:

1. Disconnect the fuel line return hose from the fitting located at the fuel tank; refer to OEM guidelines.
2. Place the opened end of the fuel line into a suitable container.

CAUTION:

To avoid injury before starting and running the engine, ensure the vehicle is parked on a level surface, parking brake is set, and the wheels are blocked.

CAUTION:

Diesel engine exhaust and some of its constituents are known to the State of California to cause cancer, birth defects, and other reproductive harm.

- **Always start and operate an engine in a well ventilated area.**
- **If operating an engine in an enclosed area, vent the exhaust to the outside.**
- **Do not modify or tamper with the exhaust system or emission control system.**

3. Start the engine.
4. Run the engine at 1000 r/min.
5. Visually check to see if air bubbles are rising to the surface of the fuel within the container.
   [a] If air bubbles are present, repair is necessary; refer to section 17.11.1.
   [b] If air bubbles are not present, check for a restrictive air filter. Shut down the engine; refer to section 17.12.

 Copyright © 2004 DETROIT DIESEL CORPORATION

17.11.1 Aerated Fuel Resolution

Perform the following steps for aerated fuel resolution:

1. Shut down engine.
2. Tighten all fuel line connections between fuel tank and fuel pump; refer to OEM guidelines.
3. Visually inspect all fuel lines between fuel tank and fuel pump for leaks.
4. Replace damaged components as required; refer to OEM guidelines.
5. Verify aerated fuel resolution; refer to section 17.11.1.1.

17.11.1.1 Test Engine with Aerated Fuel Resolution

Perform the following steps to determine if aerated fuel resolution resolved starting difficulty:

1. Refer to section 17.11 for exhaust caution before preceeding. Attempt to start and run the engine.
   [a] If the engine starts and runs, no further troubleshooting is required. Shut down the engine.
   [b] If the engine fails to start and run, check for a restrictive air filter; refer to section 17.12.

(Rev. 2004) *All information subject to change without notice.*
6SE483 0401 Copyright © 2004 DETROIT DIESEL CORPORATION

17.12 RESTRICTIVE AIR FILTER

To determine if a restrictive air filter is causing starting difficulty, perform the following steps:

1. Remove the air filter element; refer to OEM guidelines.

CAUTION:

To avoid injury before starting and running the engine, ensure the vehicle is parked on a level surface, parking brake is set, and the wheels are blocked.

CAUTION:

Diesel engine exhaust and some of its constituents are known to the State of California to cause cancer, birth defects, and other reproductive harm.

- ☐ **Always start and operate an engine in a well ventilated area.**
- ☐ **If operating an engine in an enclosed area, vent the exhaust to the outside.**
- ☐ **Do not modify or tamper with the exhaust system or emission control system.**

2. Attempt to start and run the engine.
   [a] If the engine starts and runs, no further troubleshooting is required. Shut down the engine.
   [b] If the engine fails to start and run, refer to section 17.12.1.

17.12.1 Air Filter Replacement

Perform the following steps for air filter replacement:

1. Visually inspect the air filter for clogging and replace as necessary; refer to OEM guidelines.
2. Visually inspect gaskets for deterioration and replace as necessary; refer to OEM guidelines.
3. Visually inspect air inlets for restrictions and clean as necessary; refer to OEM guidelines.
4. Verify air filter replacement; refer to section 17.12.1.1.

 Copyright © 2004 DETROIT DIESEL CORPORATION

17.12.1.1 Test Engine with Replaced Air Filter

Perform the following steps to determine if the replaced air filter resolved starting difficulty:

1. Refer to section 17.12 for the exhaust before preceeding. Attempt to start and run the engine.
   [a] If the engine starts and runs, no further troubleshooting is required. Shut down the engine.
   [b] If the engine fails to start and run, check compression; refer to section 17.13.

(Rev. 2004) *All information subject to change without notice.*
6SE483 0401 Copyright © 2004 DETROIT DIESEL CORPORATION

17.13 LOW COMPRESSION

To determine if low compression is causing starting difficulty, perform the following steps:

1. Perform a cylinder compression test.
2. Compare cylinder compression test results to specifications.
   [a] If cylinder pressure is below specifications; refer to section 17.13.1.
   [b] If cylinder pressure is within specifications, call Detroit Diesel Technical Service Group.

17.13.1 Low Compression Repair

Perform the following steps for low compression repair:

1. Remove cylinder head; refer to section 1.2.2.
2. Inspect the cylinder head for worn or damaged valves; refer to section 1.2.3.1.
3. Replace damaged valves; refer to section 1.4.1.
4. Inspect the cylinder kit components for worn or damaged liners, refer to section 1.21.2.2; pistons or piston rings; refer to section 1.17.3.1.
5. Verify repairs made to cylinder head valve(s) or cylinder kit components; refer to section 17.13.1.1.

 Copyright © 2004 DETROIT DIESEL CORPORATION

17.13.1.1 Test Engine with Repaired Cylinder Head Valve(s), and Cylinder Kit

Perform the following steps to determine if the cylinder head valve and cylinder kit repair resolved starting difficulty:

CAUTION:

To avoid injury before starting and running the engine, ensure the vehicle is parked on a level surface, parking brake is set, and the wheels are blocked.

CAUTION:

Diesel engine exhaust and some of its constituents are known to the State of California to cause cancer, birth defects, and other reproductive harm.

- ☐ **Always start and operate an engine in a well ventilated area.**
- ☐ **If operating an engine in an enclosed area, vent the exhaust to the outside.**
- ☐ **Do not modify or tamper with the exhaust system or emission control system.**

1. Attempt to start and run the engine.
   [a] If the engine starts and runs, no further troubleshooting is required. Shut down the engine.
   [b] If the engine fails to start and run, call the Detroit Diesel Technical Service.

(Rev. 2004) *All information subject to change without notice.*
6SE483 0401 Copyright © 2004 DETROIT DIESEL CORPORATION

18 NO START (ENGINE WILL NOT ROTATE)

Section		Page
18.1	DISCHARGED BATTERY	18-3
18.2	DEFECTIVE MAGNETIC SWITCH	18-5
18.3	DEFECTIVE STARTER	18-8
18.4	INTERNAL ENGINE DAMAGE	18-10

(Rev. 2004) *All information subject to change without notice.*
6SE483 0401 Copyright © 2004 DETROIT DIESEL CORPORATION

18.1 DISCHARGED BATTERY

To determine if a discharged battery is causing the engine not to start, perform the following steps:

1. Measure and record the voltage at the battery terminals; refer to OEM guidelines.
   [a] If the voltage recorded is below OEM specifications and the engine failed to start, replacement is necessary; refer to section 18.1.1.
   [b] If the voltage recorded is at recommended OEM specifications and the engine failed to start, check the magnetic switch; refer to section 18.2.

18.1.1 Discharged Battery Resolution

Perform the following steps for battery replacement:

1. Replace the battery; refer to OEM guidelines.
2. Verify replacement of the battery; refer to section 18.1.1.1.

 Copyright © 2004 DETROIT DIESEL CORPORATION

18.1.1.1 Test Engine with New Battery

Perform the following steps to determine if the new battery resolved the no start condition:

CAUTION:

To avoid injury before starting and running the engine, ensure the vehicle is parked on a level surface, parking brake is set, and the wheels are blocked.

CAUTION:

Diesel engine exhaust and some of its constituents are known to the State of California to cause cancer, birth defects, and other reproductive harm.

- ☐ **Always start and operate an engine in a well ventilated area.**
- ☐ **If operating an engine in an enclosed area, vent the exhaust to the outside.**
- ☐ **Do not modify or tamper with the exhaust system or emission control system.**

1. Attempt to start and run the engine.
   [a] If the engine starts and runs, no further troubleshooting is required. Shut down the engine.
   [b] If the engine fails to start or run, check the magnetic switch; refer to section 18.2.

(Rev. 2004) *All information subject to change without notice.*
6SE483 0401 Copyright © 2004 DETROIT DIESEL CORPORATION

18.2 DEFECTIVE MAGNETIC SWITCH

To determine if a defective magnetic switch is causing no start:

CAUTION:

To avoid injury before starting and running the engine, ensure the vehicle is parked on a level surface, parking brake is set, and the wheels are blocked.

CAUTION:

Diesel engine exhaust and some of its constituents are known to the State of California to cause cancer, birth defects, and other reproductive harm.

- ☐ **Always start and operate an engine in a well ventilated area.**
- ☐ **If operating an engine in an enclosed area, vent the exhaust to the outside.**
- ☐ **Do not modify or tamper with the exhaust system or emission control system.**

1. Start engine.

 Copyright © 2004 DETROIT DIESEL CORPORATION

⚠ CAUTION:

To avoid injury from electrical shock, use care when connecting battery cables. The magnetic switch studs are at battery voltage.

2. Clamp a heavy gage battery jumper cable between the two large studs of the magnetic switch; see Figure 18-1.

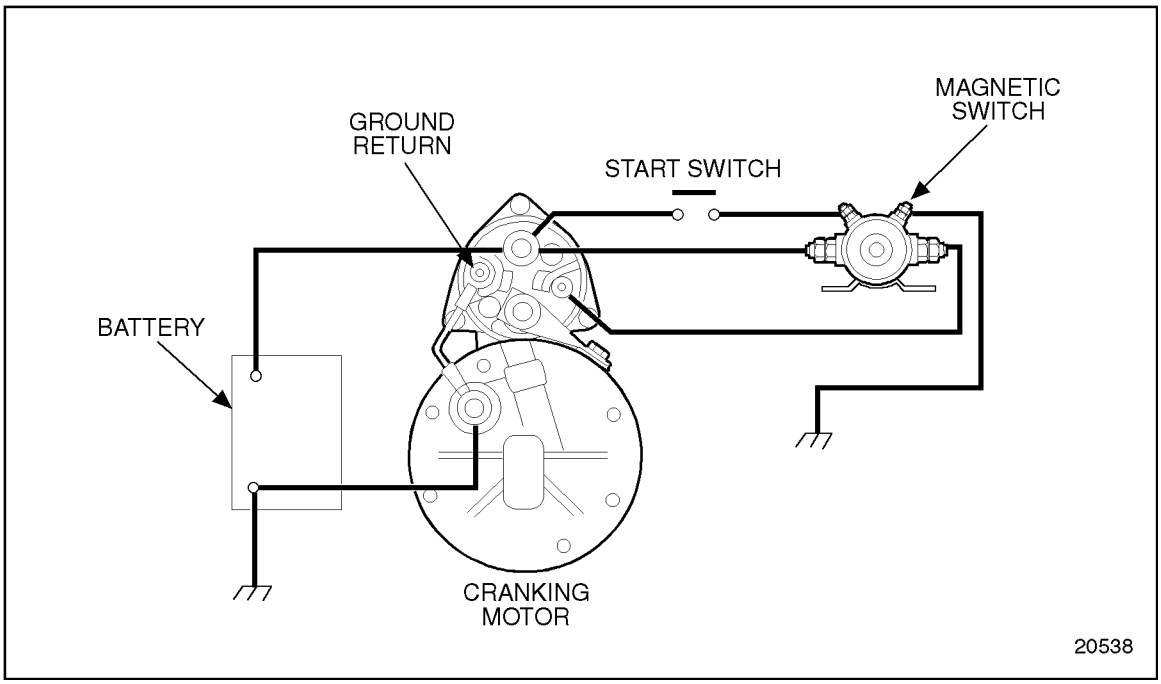

Figure 18-1 Basic Cranking Circuit

[a] If the engine cranked with the jumper cable in place, the magnetic switch must be replaced; refer to section 18.2.1.

[b] If the engine did not crank with the jumper cable in place, check the starter; refer to section 18.3.

(Rev. 2004) *All information subject to change without notice.*
6SE483 0401 Copyright © 2004 DETROIT DIESEL CORPORATION

18.2.1 Magnetic Switch Replacement

Perform the following steps for magnetic switch replacement:

1. Replace the magnetic switch. Refer to OEM guidelines.
2. Perform verification of magnetic switch replacement; refer to section 18.2.1.1.

18.2.1.1 Test Engine with New Magnetic Switch

Perform the following steps to determine if the magnetic switch replacement resolved the no start condition:

1. Refer to section 18.2 for exhuast caution before preceeding. Attempt to start and run the engine.
   [a] If the engine starts and runs, no further troubleshooting is required. Shut down the engine.
   [b] If the engine fails to start or run, check the starter; refer to section 18.3.

 Copyright © 2004 DETROIT DIESEL CORPORATION

18.3 DEFECTIVE STARTER

To determine if a defective starter is causing no start, perform the following steps:

1. Place the red lead of a voltmeter to the solenoid "BAT" or terminal; see Figure 18-2.

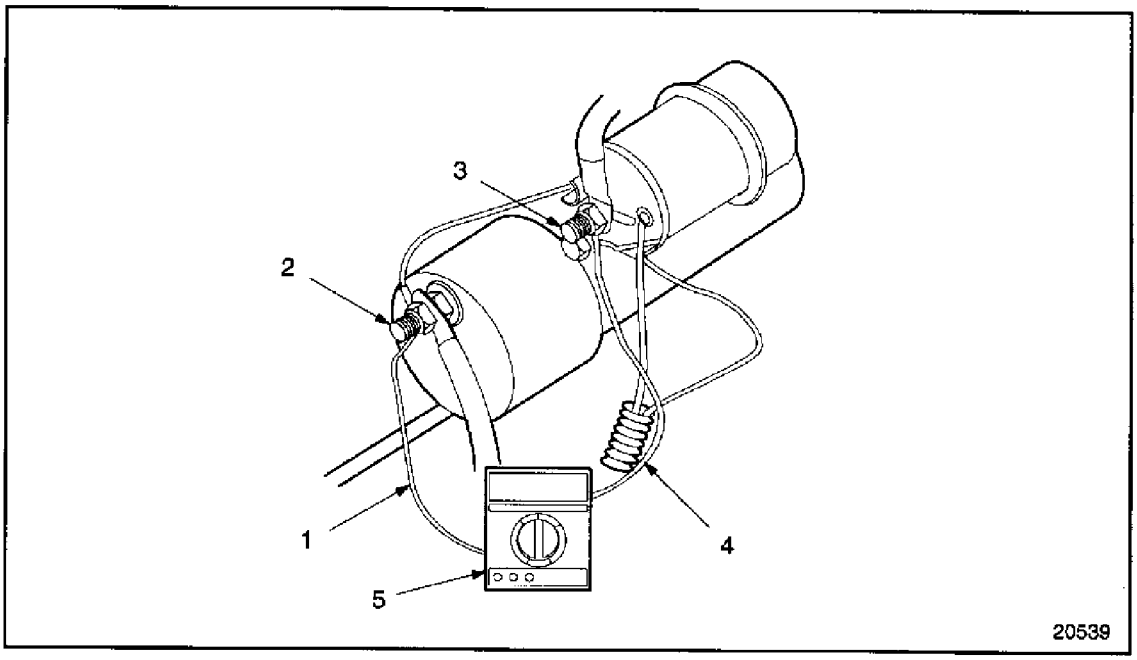

1. Red Lead
2. Starter Ground
3. Solenoid Terminal
4. Black Lead
5. Voltmeter

Figure 18-2 Cranking Motor Available Voltage Test

2. Place the black voltmeter lead to the starter ground terminal; see Figure 18-2.
3. Engage the starter switch.
4. View the voltage reading on the meter.
   [a] If the voltage is less than specification (refer to OEM guidelines) while cranking the engine, starter replacement is necessary; refer to section 18.3.1.
   [b] If the voltage is to specification (refer to OEM guidelines) while attempting to crank the engine, check for internal damage; refer to section 18.4.

(Rev. 2004) *All information subject to change without notice.*
6SE483 0401 Copyright © 2004 DETROIT DIESEL CORPORATION

18.3.1 Starter Replacement

Perform the following steps for starter replacement:

1. Replace the starter; refer to section 8.4.1.
2. Verify replacement of starter; refer to section 18.3.1.1.

18.3.1.1 Test Engine with New Starter

Perform the following steps to determine if the new starter resolved no start condition:

CAUTION:

To avoid injury before starting and running the engine, ensure the vehicle is parked on a level surface, parking brake is set, and the wheels are blocked.

CAUTION:

Diesel engine exhaust and some of its constituents are known to the State of California to cause cancer, birth defects, and other reproductive harm.

- ☐ **Always start and operate an engine in a well ventilated area.**
- ☐ **If operating an engine in an enclosed area, vent the exhaust to the outside.**
- ☐ **Do not modify or tamper with the exhaust system or emission control system.**

1. Attempt to start and run the engine.
   [a] If the engine starts and runs, no further troubleshooting is required. Shut down the engine.
   [b] If the engine fails to start or run, check for internal engine damage. Refer to section 18.4.

 Copyright © 2004 DETROIT DIESEL CORPORATION

18.4 INTERNAL ENGINE DAMAGE

To determine if internal engine damage is causing no start condition, perform the following steps:

1. Install a 3/4 in. breaker bar or ratchet and attempt to bar the engine over by hand.
2. Determine severity of internal engine damage.
   [a] If the engine rotates freely, check the electronic control module wiring harness; refer to section 17.1.
   [b] If the engine binds and will not rotate freely, replace crankshaft bearings; refer to section 1.9.1 and cylinder liners; refer to section 1.9.3.

18.4.1 Internal Engine Damage Replacement

Perform the following steps for crankshaft bearings, and cylinder liners replacement:

1. Replace the crankshaft bearings; refer to section 1.9.2.
2. Replace the cylinder liners; refer to section 1.21.1.
3. Verify replacement of components; refer to section 18.4.1.1.

(Rev. 2004) *All information subject to change without notice.*
6SE483 0401 Copyright © 2004 DETROIT DIESEL CORPORATION

18.4.1.1 Test Engine with Replaced Components

Perform the following steps to determine if the new components resolved no start condition:

CAUTION:

To avoid injury before starting and running the engine, ensure the vehicle is parked on a level surface, parking brake is set, and the wheels are blocked.

CAUTION:

Diesel engine exhaust and some of its constituents are known to the State of California to cause cancer, birth defects, and other reproductive harm.

- ☐ **Always start and operate an engine in a well ventilated area.**
- ☐ **If operating an engine in an enclosed area, vent the exhaust to the outside.**
- ☐ **Do not modify or tamper with the exhaust system or emission control system.**

1. Attempt to start and run the engine.
   [a] If the engine starts and runs, no further troubleshooting is required. Shut down the engine.
   [b] If the engine fails to start or run, call Detroit Diesel Technical Service.

 Copyright © 2004 DETROIT DIESEL CORPORATION

(Rev. 2004) *All information subject to change without notice.*
6SE483 0401 Copyright © 2004 DETROIT DIESEL CORPORATION

19 EXCESSIVE OIL CONSUMPTION

Section		Page
19.1	MISCALIBRATED DIPSTICK	19-3
19.2	EXTERNAL OIL LEAKS	19-4
19.3	LEAKING OIL COOLER CORE	19-6
19.4	DEFECTIVE AIR COMPRESSOR	19-8
19.5	DEFECTIVE TURBOCHARGER	19-10
19.6	WORN OR DAMAGED VALVE OR CYLINDER KIT	19-11

 Copyright © 2004 DETROIT DIESEL CORPORATION

19.1 MISCALIBRATED DIPSTICK

To determine if an overfilled crankcase is causing excessive oil consumption, perform the following:

1. Ensure vehicle is parked on level ground.
2. Perform a universal dipstick calibration check; refer to SIB 12-60-94R (May 1995).
   [a] If the calibration check indicates that the oil level is off by more than 2 mm (0.078 in.), contact your Detroit Diesel regional support office.
   [b] Check for oil leaks; refer to section 19.2.

 Copyright © 2004 DETROIT DIESEL CORPORATION

19.2 EXTERNAL OIL LEAKS

To determine if oil leaks are causing excessive oil consumption, perform the following:

1. Steam clean the engine.

⚠ CAUTION:

To avoid injury before starting and running the engine, ensure the vehicle is parked on a level surface, parking brake is set, and the wheels are blocked.

⚠ CAUTION:

Diesel engine exhaust and some of its constituents are known to the State of California to cause cancer, birth defects, and other reproductive harm.

- ☐ **Always start and operate an engine in a well ventilated area.**
- ☐ **If operating an engine in an enclosed area, vent the exhaust to the outside.**
- ☐ **Do not modify or tamper with the exhaust system or emission control system.**

2. Start and run the engine to operating temperature 88°C (190°F).
3. Check for leaks at oil lines, connections, mating joints, seals, and gaskets.
   [a] If no oil leaks are found, shut down the engine and check for a leaking oil cooler core; refer to section 19.3.
   [b] If oil leaks are found, shut down the engine; refer to section 19.2.1.

(Rev. 2004) *All information subject to change without notice.*
6SE483 0401 Copyright © 2004 DETROIT DIESEL CORPORATION

19.2.1 Engine Oil Leak Repair

Perform the following steps, as necessary, to resolve engine oil leaks:

1. Repair or replace components leaking oil; refer to section 3.2.
2. Verify repairs made to correct oil leaks; refer to section 19.2.1.1.

19.2.1.1 Test Engine with Repairs Made to Correct Oil Leaks

Perform the following steps to determine if the repairs resolved the oil leaks:

1. Refer to section 19.2 for exhaust caution before preceeding. Start and run the engine to operating temperature 88°C (190°F).
2. Shut down the engine.
3. Check the engine for oil leaks.
   [a] If no oil leaks are observed, check for a leaking oil cooler core; refer to section 19.3.
   [b] If external oil leaks are still present, repeat section 19.2.1.

 Copyright © 2004 DETROIT DIESEL CORPORATION

19.3 LEAKING OIL COOLER CORE

To determine if a leaking oil cooler core is causing excessive oil consumption, perform the following:

1. Check for oil in the engine coolant or radiator.
   [a] If oil is present in either the engine coolant or radiator; perform step 2
   [b] If no oil is present in either the engine coolant or radiator, check for a defective air compressor; refer to section 19.4.
2. Remove the oil cooler core and housing; refer to section 3.8.2or refer to section 3.9.2for pre-1991 oil coolers.
3. Clean both the oil side and water side of oil cooler core; refer to section 3.8.2 or refer to section 3.9.2 for pre-1991 oil coolers.
4. Perform an oil cooler core pressure test; refer to section 3.8.3.1or refer to section 3.9.3.1for pre-1991 oil coolers.
5. Visually check to see if air bubbles are rising to the surface of the water within the container.
   [a] If air bubbles are present, refer to section 19.3.1.
   [b] If no air bubbles are present, complete a lube oil consumption report, call the Detroit Diesel Technical Service Group for a form.

19.3.1 Oil Cooler Core Replacement

Perform the following for oil cooler core replacement:

1. Remove and install a new oil cooler core refer to section 3.8.4and refer to section 3.9.4.
2. Verify replacement of oil cooler core; refer to section 19.3.1.1.

(Rev. 2004) *All information subject to change without notice.*
6SE483 0401 Copyright © 2004 DETROIT DIESEL CORPORATION

19.3.1.1 Test Engine with New Oil Cooler Core

Perform the following steps to determine if the replaced oil cooler core reduced oil consumption:

CAUTION:

To avoid injury before starting and running the engine, ensure the vehicle is parked on a level surface, parking brake is set, and the wheels are blocked.

CAUTION:

Diesel engine exhaust and some of its constituents are known to the State of California to cause cancer, birth defects, and other reproductive harm.

- ☐ **Always start and operate an engine in a well ventilated area.**
- ☐ **If operating an engine in an enclosed area, vent the exhaust to the outside.**
- ☐ **Do not modify or tamper with the exhaust system or emission control system.**

1. Start and run the engine to operating temperature 88°C (190°F).
2. Shut down the engine.
3. Check the engine coolant for the presence of oil.
   [a] If no oil is present in the coolant, perform an lube oil consumption test report; refer to section 19.3.1.2.
   [b] If oil is present in the coolant, repeat section 19.3.1.

19.3.1.2 Test Engine for Reduced Oil Consumption

Perform a lube oil consumption report, call the Detroit Diesel Technical Service Group for a form.

1. Review the oil consumption report.
   [a] If the oil consumption report data is within specifications, check for defective air compressor. Refer to section 19.4.
   [b] If the oil consumption report data is not within specifications, call Detroit Diesel Technical Service Group.

 Copyright © 2004 DETROIT DIESEL CORPORATION

19.4 DEFECTIVE AIR COMPRESSOR

To determine if a defective air compressor is causing excessive oil consumption, perform the following:

1. Perform a crankcase pressure test and record the test results.
2. Disconnect the air outlet line from the air compressor; see Figure 19-1; refer to section 10.1.5.

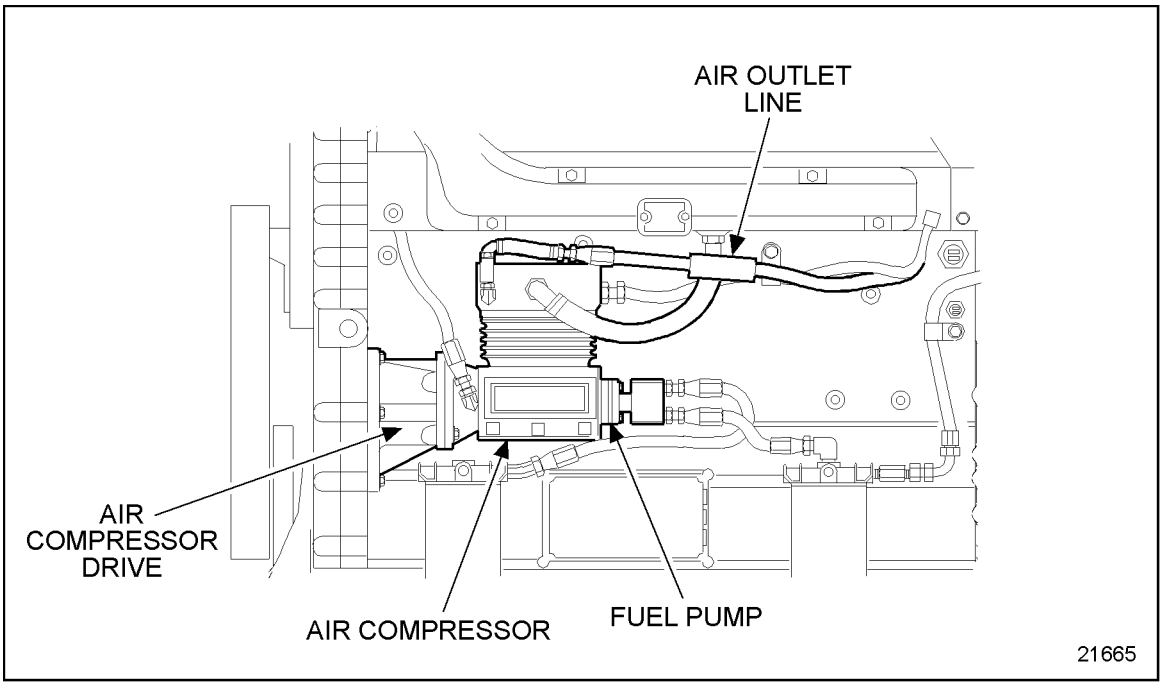

Figure 19-1 Air Compressor Air Outlet Line

3. Repeat step 1 and record the test results.
4. Compare the results of test one with test two.
   [a] If the engine crankcase pressure remained the same, check the turbocharger; refer to section 19.5.
   [b] If the engine crankcase pressure decreased, replace the air compressor; refer to section 19.4.1.

(Rev. 2004) *All information subject to change without notice.*
6SE483 0401 Copyright © 2004 DETROIT DIESEL CORPORATION

19.4.1 Air Compressor Removal

Perform the following steps to remove the defective air compressor:

1. Remove the air compressor from the engine; refer to section 10.1.5.
2. Disassemble and repair the air compressor; refer to OEM guidelines.
3. Install the repaired air compressor to the engine; refer to section 10.1.8.
4. Verify repair of the air compressor; refer to section 19.4.1.1.

19.4.1.1 Test Engine with Repaired Air Compressor

Perform the following steps to determine if the repaired air compressor resolved the excessive crankcase pressure:

CAUTION:

To avoid injury before starting and running the engine, ensure the vehicle is parked on a level surface, parking brake is set, and the wheels are blocked.

CAUTION:

Diesel engine exhaust and some of its constituents are known to the State of California to cause cancer, birth defects, and other reproductive harm.

- ☐ **Always start and operate an engine in a well ventilated area.**
- ☐ **If operating an engine in an enclosed area, vent the exhaust to the outside.**
- ☐ **Do not modify or tamper with the exhaust system or emission control system.**

1. Start and run the engine.
2. Perform a crankcase pressure test.
   [a] If the engine crankcase pressure exceeds 3 in. H_2O (0.75 kPa), refer to section 19.5. Shut down the engine.
   [b] If the engine crankcase pressure is within 3 in. H_2O (0.75 kPa), shut down the engine; no further troubleshooting is required.

 Copyright © 2004 DETROIT DIESEL CORPORATION

19.5 DEFECTIVE TURBOCHARGER

To determine if a defective turbocharger is causing excessive oil consumption, perform the following:

1. Remove the turbocharger drain line connected to the crankcase and place the drain line into a suitable container.
2. Perform a crankcase pressure test.
   [a] If the engine crankcase pressure is more than 3 in. H_2O (0.75 kPa), replace the turbocharger; refer to section 6.6.1.
   [b] If the engine crankcase pressure is 3 in. H_2O (0.75 kPa) or more, check for worn or damaged valve and cylinder kit; refer to section 19.6.

19.5.1 Turbocharger Replacement

Perform the following steps to replace a defective turbocharger:

1. Remove the defective turbocharger from the engine; refer to section 6.6.2.
2. Tag removed turbocharger for remanufacture.
3. Install a new turbocharger to the engine; refer to section 6.6.7.
4. Verify replacement of new turbocharger; refer to section 19.5.1.1.

19.5.1.1 Test Engine with New Turbocharger

Perform the following steps to determine if a new turbocharger resolved the excessive crankcase pressure:

1. Remove the turbocharger drain line connected to the crankcase and place the drain line into a suitable container.
2. Perform a crankcase pressure test.
   [a] If the engine crankcase pressure is greater than 3 in. H_2O (0.75 kPa), check for worn or damaged valve or cylinder kit; refer to section 19.6.
   [b] If the engine crankcase pressure is 3 in. H_2O (0.75 kPa) or less, no further troubleshooting is required.

(Rev. 2004) *All information subject to change without notice.*
6SE483 0401 Copyright © 2004 DETROIT DIESEL CORPORATION

19.6 WORN OR DAMAGED VALVE OR CYLINDER KIT

A loss of cylinder pressure can cause increased oil consumption. The detection and elimination of cylinder pressure losses is vital to engine life and efficient operation. To assist the mechanic in effectively measuring the loss of cylinder pressure, and locating the source of abnormal leaks in individual cylinders, the following test procedure has been developed.

1. Move the vehicle requiring test to the chassis dynamometer; refer to OEM guidelines.
2. Disconnect air compressor, refer to section 10.1.5.

CAUTION:

To avoid injury before starting and running the engine, ensure the vehicle is parked on a level surface, parking brake is set, and the wheels are blocked.

CAUTION:

Diesel engine exhaust and some of its constituents are known to the State of California to cause cancer, birth defects, and other reproductive harm.

- ☐ **Always start and operate an engine in a well ventilated area.**
- ☐ **If operating an engine in an enclosed area, vent the exhaust to the outside.**
- ☐ **Do not modify or tamper with the exhaust system or emission control system.**

3. Start the engine.
4. Run the engine and bring the engine coolant temperature to normal operating range.
5. Run vehicle to full load and rated speed.
6. Attach a manometer calibrated to read in inches of water, to the oil dipstick opening. Measure and record the crankcase pressure.
7. Shut down engine.
8. Remove the vehicle from the chassis dynamometer.
9. Review the crankcase pressure test results.
   [a] If the crankcase pressure exceeds 3 in. H_2O (0.75 kPa), repair worn or damaged valve(s) or cylinder kit; refer to section 19.6.1.
   [b] If the crankcase pressure was less than or equal to 3 in. H_2O (0.75 kPa), perform cylinder compression test.
10. Compare the cylinder compression test results to specifications.

 Copyright © 2004 DETROIT DIESEL CORPORATION

[a] If the cylinder compression is below specifications, repair worn or damaged valve(s) or cylinder kit; refer to section 19.6.1.

[b] If the cylinder compression is within specification, call Detroit Diesel Technical Service Group.

19.6.1 Worn or Damaged Valve(s) or Cylinder Kit(s) Repair

Perform the following steps to repair worn or damaged valve(s) and cylinder kit(s):

1. Remove cylinder head; refer to section 1.2.2.
2. Inspect the cylinder head for worn or damaged valves; refer to section 1.2.3.1.
3. Inspect the cylinder kit components for worn or damaged liners; refer to section 1.21.2.2; pistons or piston rings, refer to section 1.17.3.1.
4. Replace damaged cylinder kit components; refer to section 1.19.4.
5. Verify repairs made to cylinder head valve(s) or cylinder kit components; refer to section 19.6.1.1.

19.6.1.1 Test Engine with Repaired Cylinder Head Valve(s), and Cylinder Kit

Perform the following steps to determine if the cylinder head valve and cylinder kit repair resolved starting difficulty:

1. Refer to section 19.6 for exhaust caution before preceeding. Attempt to start and run the engine.

   [a] If the engine starts and runs, no further troubleshooting is required.

   [b] If the engine fails to start and run, call the Detroit Diesel Technical Service Group.

(Rev. 2004) *All information subject to change without notice.*
6SE483 0401 Copyright © 2004 DETROIT DIESEL CORPORATION

20 EXCESSIVE CRANKCASE PRESSURE

Section		Page
20.1	OBSTRUCTION OR DAMAGE TO ROCKER COVER BREATHER	20-3
20.2	DEFECTIVE AIR COMPRESSOR	20-5
20.3	DEFECTIVE TURBOCHARGER	20-7
20.4	WORN OR DAMAGED VALVE OR CYLINDER KIT	20-8

 Copyright © 2004 DETROIT DIESEL CORPORATION

20.1 OBSTRUCTION OR DAMAGE TO ROCKER COVER BREATHER

To determine if an obstructed or damaged breather is causing excessive crankcase pressure, perform the following:

1. Perform a crankcase pressure test.
   [a] If the engine crankcase pressure is less than 3 in. H_2O (0.75 kPa), check the air compressor. Refer to section 20.2.
   [b] If the engine crankcase pressure is greater than 3 in. H_2O (0.75 kPa), replace wire mesh element. Refer to section 20.1.1.

20.1.1 Rocker Cover Breather Resolution

Perform the following steps to replace wire mesh element replacement:

1. Remove the valve rocker cover(s); for one-piece refer to section 1.6.2, for two-piece refer to section 1.6.3, for three-piece refer to section 1.6.5.
2. Remove the wire mesh form the rocker cover; refer to section 1.6.6.
3. Install a new wire mesh element to the rocker cover; refer to section 1.6.7.
4. Install the rocker cover to the engine; for one-piece refer to section 1.6.2, for two-piece or three-piece refer to section 1.6.9.
5. Verify replacement of wire mesh element; refer to section 20.1.1.1.

 Copyright © 2004 DETROIT DIESEL CORPORATION

20.1.1.1 Test Engine with New Wire Mesh Element

Perform the following steps to determine if the new wire mesh element resolved the excessive crankcase pressure:

CAUTION:

To avoid injury before starting and running the engine, ensure the vehicle is parked on a level surface, parking brake is set, and the wheels are blocked.

CAUTION:

Diesel engine exhaust and some of its constituents are known to the State of California to cause cancer, birth defects, and other reproductive harm.

- ☐ **Always start and operate an engine in a well ventilated area.**
- ☐ **If operating an engine in an enclosed area, vent the exhaust to the outside.**
- ☐ **Do not modify or tamper with the exhaust system or emission control system.**

1. Start and run the engine.
2. Perform a crankcase pressure test.
   [a] If the engine crankcase pressure is less than 3 in. H_2O (0.75 kPa), no further troubleshooting is required. Shut down the engine.
   [b] If the engine crankcase pressure is greater than 3 in. H_2O (0.75 kPa), check the air compressor; refer to section 20.2. Shut down the engine.

(Rev. 2004) *All information subject to change without notice.*
6SE483 0401 Copyright © 2004 DETROIT DIESEL CORPORATION

20.2 DEFECTIVE AIR COMPRESSOR

To determine if a defective air compressor is causing excessive crankcase pressure, perform the following:

1. Perform a crankcase pressure test and record the test results.
2. Disconnect the air outlet line from the air compressor; see Figure 20-1; refer to section 10.1.5.

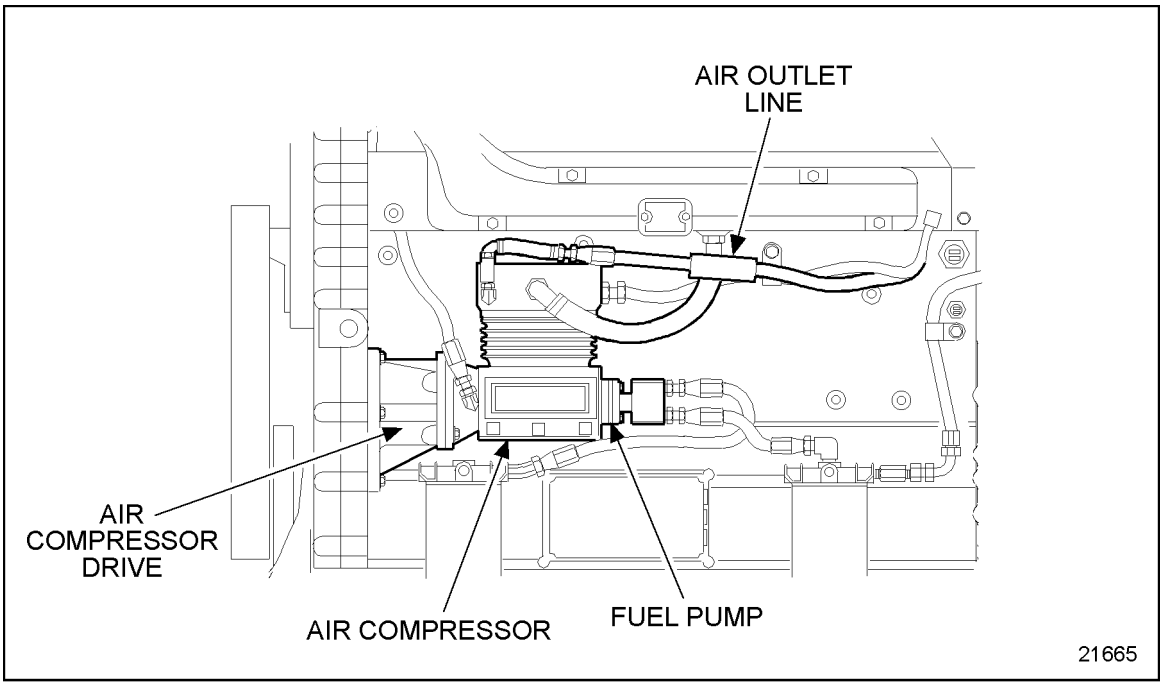

Figure 20-1 Air Compressor Air Outlet Line

3. Repeat step 1 and record the test results.
4. Compare the results of test one with test two.
   [a] If the engine crankcase pressure remained the same, check the turbocharger; refer to section 20.3.
   [b] If the engine crankcase pressure decreased, repair the air compressor; refer to section 20.2.1.

20.2.1 Air Compressor Repair

Perform the following steps to repair the defective air compressor:

1. Remove the air compressor from the engine; refer to section 10.1.5.
2. Install the repaired air compressor to the engine; refer to section 10.1.8.
3. Verify repair of the air compressor; refer to section 20.2.1.1.

 Copyright © 2004 DETROIT DIESEL CORPORATION

20.2.1.1 Test Engine with Repaired Air Compressor

Perform the following steps to determine if a repaired air compressor resolved the excessive crankcase pressure:

CAUTION:

To avoid injury before starting and running the engine, ensure the vehicle is parked on a level surface, parking brake is set, and the wheels are blocked.

CAUTION:

Diesel engine exhaust and some of its constituents are known to the State of California to cause cancer, birth defects, and other reproductive harm.

- ☐ **Always start and operate an engine in a well ventilated area.**
- ☐ **If operating an engine in an enclosed area, vent the exhaust to the outside.**
- ☐ **Do not modify or tamper with the exhaust system or emission control system.**

1. Start and run the engine.
2. Perform a crankcase pressure test.
   [a] If the engine crankcase pressure is within 3 in. H_2O (0.75 kPa), no further troubleshooting is required. Shut down the engine.
   [b] If the engine crankcase pressure is not within 3 in. H_2O (0.75 kPa), check the turbocharger, refer to section 20.3. Shut down the engine.

(Rev. 2004) *All information subject to change without notice.*
6SE483 0401 Copyright © 2004 DETROIT DIESEL CORPORATION

20.3 DEFECTIVE TURBOCHARGER

To determine if a defective turbocharger is causing excessive crankcase pressure, perform the following:

NOTICE:
Ensure that the engine is not allowed to operate longer than necessary to perform the crankcase pressure test. A complete loss of crankcase oil will severely damage the engine.

1. Remove the turbocharger drain line connected to the crankcase and place the drain line into a suitable container; refer to section 6.6.2.
2. Perform a crankcase pressure test.
   [a] If the engine crankcase pressure is less than 3 in. H_2O, replace the turbocharger; refer to section 20.3.1. Shut down the engine.
   [b] If the engine crankcase pressure indicates no change, check for a worn or damaged valve or cylinder kit; refer to section 20.4. Shut down the engine.

20.3.1 Turbocharger Replacement

Perform the following steps to replace a defective turbocharger:

1. Remove defective turbocharger from the engine; refer to section 6.6.2.
2. Tag removed turbocharger for remanufacture.
3. Install a replacement turbocharger to the engine; refer to section 6.6.7.
4. Verify replacement of new turbocharger; refer to section 20.3.1.1.

20.3.1.1 Test Engine with New Turbocharger

Perform the following steps to determine if a new turbocharger resolved the excessive crankcase pressure:

1. Perform a crankcase pressure test.
   [a] If the engine crankcase pressure is 3 in. H_2O (0.75 kPa) or less, no further troubleshooting is required.
   [b] If the engine crankcase pressure is greater than 3 in. H_2O (0.75 kPa), check for a worn or damaged valve or cylinder kit; refer to section 20.4.

 Copyright © 2004 DETROIT DIESEL CORPORATION

20.4 WORN OR DAMAGED VALVE OR CYLINDER KIT

To determine if a worn or damaged cylinder kit is causing excessive crankcase pressure, perform the following:

1. Move the vehicle requiring test to the chassis dynamometer; refer to OEM guidelines.
2. Disconnect air compressor; refer to section 10.1.5.

CAUTION:

To avoid injury before starting and running the engine, ensure the vehicle is parked on a level surface, parking brake is set, and the wheels are blocked.

CAUTION:

Diesel engine exhaust and some of its constituents are known to the State of California to cause cancer, birth defects, and other reproductive harm.

- ☐ **Always start and operate an engine in a well ventilated area.**
- ☐ **If operating an engine in an enclosed area, vent the exhaust to the outside.**
- ☐ **Do not modify or tamper with the exhaust system or emission control system.**

3. Start the engine.
4. Run the engine and bring the engine coolant temperature to normal operating range.
5. Run the vehicle to full load and rated speed.
6. Attach a manometer calibrated to read in inches of water, to the oil dipstick opening.
7. Measure and record crankcase pressure.
8. Shut down the engine.
9. Remove the vehicle from the chassis dynamometer.
10. Review the crankcase pressure test.
    [a] If the crankcase pressure is greater than 3 in. H_2O (0.75 kPa), refer to step 11.
    [b] If the crankcase pressure is less than 3 in. H_2O (0.75 kPa); no further troubleshooting required.

(Rev. 2004) *All information subject to change without notice.*
6SE483 0401 Copyright © 2004 DETROIT DIESEL CORPORATION

11. Perform the cylinder compression test.
    [a] If cylinder pressure is below specifications, refer to section 20.4.1.
    [b] If cylinder pressure is within specifications, call Detroit Diesel Technical Service Group.

20.4.1 Worn or Damaged Valve or Cylinder Kit Repair

Perform the following steps for worn or damaged valve or cylinder kit:

1. Remove the cylinder head; refer to section 1.2.2.
2. Inspect the cylinder head for worn or damaged valves; refer to section 1.2.3.1.
3. Inspect the cylinder kit components for worn or damaged liners; refer to section 1.21.2.2; pistons or piston rings, refer to section 1.17.3.1.
4. Verify repair to cylinder valve(s) or cylinder kit components; refer to section 20.4.1.1.

20.4.1.1 Test Engine with Repairs Made to Correct Worn or Damaged Valve or Cylinder Kit

Perform the following to determine if the repaired valve or cylinder kit resolved the excessive crankcase pressure:

1. Move the vehicle requiring test to the chassis dynamometer; refer to OEM guidelines.
2. Disconnect air compressor; refer to section 10.1.5.
3. Refer to section 20.4 for exhsut caution before preceeding. Start the engine.
4. Run the engine and bring the engine coolant temperature to normal operating range.
5. Run the vehicle to full load and rated speed.
6. Attach a manometer calibrated to read in inches of water, to the oil dipstick opening.
7. Measure and record crankcase pressure.
8. Shut down the engine.
9. Remove the vehicle from the chassis dynamometer.
10. Compare the cylinder pressure test results to specifications.
    [a] If cylinder pressure is within specifications, no further troubleshooting is required.
    [b] If cylinder pressure is not within specifications, call Detroit Diesel Technical Service Group.

 Copyright © 2004 DETROIT DIESEL CORPORATION

(Rev. 2004) *All information subject to change without notice.*
6SE483 0401 Copyright © 2004 DETROIT DIESEL CORPORATION

21 EXCESSIVE EXHAUST SMOKE (BLACK OR GRAY)

Section **Page**

21.1 IMPROPER GRADE OF FUEL OIL 21-3
21.2 RESTRICTED AIR CLEANER ELEMENT 21-5
21.3 RESTRICTED OR CRACKED CHARGE AIR COOLER 21-7
21.4 FAULTY EXHAUST SYSTEM 21-9
21.5 FAULTY FUEL INJECTOR 21-11
21.6 DEFECTIVE TURBOCHARGER 21-13

 Copyright © 2004 DETROIT DIESEL CORPORATION

21.1 IMPROPER GRADE OF FUEL OIL

To determine if an improper grade of fuel oil is causing excessive black or gray smoke, perform the following:

1. Acquire a fuel oil sample from the vehicle fuel tank(s).
2. Submit fuel oil sample for an ASTM test analysis.
   [a] If the fuel oil meets specifications, check for a restrictive air cleaner; refer to section 21.2.
   [b] If the fuel oil did not meet specifications, resolve improper grade of fuel; refer to section 21.1.1.

21.1.1 Improper Grade of Fuel Resolution

Perform the following steps to resolve the improper grade of fuel oil:

1. Drain the fuel oil tanks, refer to OEM guidelines, and dispose of properly.
2. Refill the fuel oil tanks with new fuel oil having a cetane number greater than 40.
3. Verify fuel oil resolution; refer to section 21.1.1.1.

 Copyright © 2004 DETROIT DIESEL CORPORATION

21.1.1.1 Test the Engine with New Fuel Oil

Perform the following steps to determine if the fuel oil refill resolved the excessive exhaust smoke condition:

CAUTION:

To avoid injury before starting and running the engine, ensure the vehicle is parked on a level surface, parking brake is set, and the wheels are blocked.

CAUTION:

Diesel engine exhaust and some of its constituents are known to the State of California to cause cancer, birth defects, and other reproductive harm.

- ☐ **Always start and operate an engine in a well ventilated area.**
- ☐ **If operating an engine in an enclosed area, vent the exhaust to the outside.**
- ☐ **Do not modify or tamper with the exhaust system or emission control system.**

1. Start and run the engine.
2. Run the engine at idle with a no-load for approximately 5 minutes, allowing the engine coolant to reach normal operating range.
3. Visually inspect exhaust for excessive smoke.
   [a] If the engine exhaust smoke emission appears normal, no further troubleshooting is required. Shut down the engine.
   [b] If the engine exhaust smoke is excessively black or gray, shut down the engine. Check the air filter; refer to section 21.2.

(Rev. 2004) *All information subject to change without notice.*
6SE483 0401 Copyright © 2004 DETROIT DIESEL CORPORATION

21.2 RESTRICTED AIR CLEANER ELEMENT

To determine if a restrictive air cleaner is causing excessive black or gray smoke, perform the following:

1. Remove the air filter element from the air cleaner container; refer to OEM guidelines.
2. Visually inspect the air cleaner element for damage or clogging.
   [a] If no damage or clogging is found, check the charge air cooler; refer to section 21.3.
   [b] If damage or clogging is found, refer to section 21.2.1.

21.2.1 Air Filter Element Replacement

Perform the following to replace the air filter element:

1. Remove and replace the damaged or clogged air filter element; refer to OEM guidelines.
2. Verify air filter element replacement; refer to section 21.2.1.1.

 Copyright © 2004 DETROIT DIESEL CORPORATION

21.2.1.1 Test the Engine with Replaced Air Filter Element

Perform the following to determine if the new filter element resolved excessive exhaust smoke:

CAUTION:

To avoid injury before starting and running the engine, ensure the vehicle is parked on a level surface, parking brake is set, and the wheels are blocked.

CAUTION:

Diesel engine exhaust and some of its constituents are known to the State of California to cause cancer, birth defects, and other reproductive harm.

- ☐ **Always start and operate an engine in a well ventilated area.**
- ☐ **If operating an engine in an enclosed area, vent the exhaust to the outside.**
- ☐ **Do not modify or tamper with the exhaust system or emission control system.**

1. Start and run the engine.
2. Run the engine at idle with a no-load for approximately 5 minutes, allowing the engine coolant to reach normal operating range.
3. Visually inspect exhaust for excessive smoke.
   [a] If the engine exhaust emission appears normal, no further troubleshooting is required. Shut down the engine.
   [b] If the engine exhaust emission is excessively black or gray, shut down the engine. Check the charge air cooler; refer to section 21.3.

(Rev. 2004) *All information subject to change without notice.*
6SE483 0401 Copyright © 2004 DETROIT DIESEL CORPORATION

21.3 RESTRICTED OR CRACKED CHARGE AIR COOLER

To determine if a charge air cooler is causing excessive exhaust smoke, perform the following:

NOTICE:
To avoid engine damage, follow the installation instructions provided with the air-to-air charge air cooler test kit.

1. Attach a WK93 air-to-air charge air cooler test kit; refer to OEM guidelines.
2. Disconnect the air inlet hose from the outlet side of the turbocharger compressor housing; refer to section 6.6.2.
3. Attach the air-to-air cooler test kit adaptor plug to fit into the hose at the compressor connector; refer to OEM guidelines.
4. Attach an air pressure hose to the air chuck at the regulator and gradually pressurize the air inlet system to a pressure of 25 · lb·in.^{2}(177 kPa).
5. Apply a water and soap solution to each hose connection, across the face of the charge air cooler.
6. Apply a water and soap solution to the air intake manifold and cylinder head mating surface area.
7. Visually inspect all joints for air leaks and all charge air cooler welded surfaces for stress cracks.
   [a] If air leaks are present around the joints, replace the charge air cooler; refer to section 21.3.1.
   [b] If any leaks are present around the air intake manifold, repair the air intake manifold; refer to section 21.3.2.
   [c] If no leaks are present, check for faulty exhaust system; refer to section 21.4.

21.3.1 Charge Air Cooler Replacement

Perform the following steps to replace the charge air cooler:

1. Replace the charge air cooler, refer to OEM guidelines.
2. Verify replacement of the charge air cooler; refer to section 21.3.2.1.

 Copyright © 2004 DETROIT DIESEL CORPORATION

21.3.2 Air Intake Manifold Repair

Perform the following steps to repair the air intake manifold:

1. Remove the air intake manifold; refer to section 6.4.2.
2. Inspect the air intake manifold; refer to section 6.4.3.1.
3. Install the air intake manifold; refer to section 6.4.4.
4. Verify repair of the air intake manifold; refer to section 21.3.2.1.

21.3.2.1 Test the Engine with Replaced Charge Air Cooler and Air Intake Manifold

To determine if the replaced charge air cooler and air intake manifold resolved the excessive exhaust smoke condition, perform the following:

CAUTION:

To avoid injury before starting and running the engine, ensure the vehicle is parked on a level surface, parking brake is set, and the wheels are blocked.

CAUTION:

Diesel engine exhaust and some of its constituents are known to the State of California to cause cancer, birth defects, and other reproductive harm.

- ☐ **Always start and operate an engine in a well ventilated area.**
- ☐ **If operating an engine in an enclosed area, vent the exhaust to the outside.**
- ☐ **Do not modify or tamper with the exhaust system or emission control system.**

1. Start and run the engine.
2. Run the engine at idle with a no-load for approximately 5 minutes, allowing the engine coolant to reach normal operating range.
3. Visually inspect exhaust for excessive smoke.
   [a] If the engine exhaust emission appears normal, no further troubleshooting is required. Shut down the engine.
   [b] If the engine exhaust emission is excessively black or gray, shut down the engine. Check the faulty exhaust system; refer to section 21.4.

(Rev. 2004) *All information subject to change without notice.*
6SE483 0401 Copyright © 2004 DETROIT DIESEL CORPORATION

21.4 FAULTY EXHAUST SYSTEM

To determine if a faulty exhaust system is causing excessive exhaust smoke, perform the following:

1. Drill an 11/32 in. hole in the exhaust pipe, 5 to 12 in. (127 - 305 mm) from the turbocharger exhaust outlet.

NOTE:
The tapped hole must be in a comparatively straight area of the turbocharger exhaust outlet.

2. Tap the hole to accommodate an 1/8 in. pipe plug.
3. Connect a manometer to the tapped hole.

CAUTION:

To avoid injury before starting and running the engine, ensure the vehicle is parked on a level surface, parking brake is set, and the wheels are blocked.

CAUTION:

Diesel engine exhaust and some of its constituents are known to the State of California to cause cancer, birth defects, and other reproductive harm.

- ☐ **Always start and operate an engine in a well ventilated area.**
- ☐ **If operating an engine in an enclosed area, vent the exhaust to the outside.**
- ☐ **Do not modify or tamper with the exhaust system or emission control system.**

4. Start and run the engine.
5. Run the engine at idle with a no-load for approximately 5 minutes, allowing the engine coolant to reach normal operating range.
6. Run the engine speed to full load.
   [a] If the exhaust back pressure at full load is less than 3.0 in. Hg (10.1 kPa), check the fuel injectors, refer to section 21.5. Shut down the engine.
   [b] If the exhaust back pressure at full load is 3.0 in. Hg (10.1 kPa) or greater, refer to section 21.4.1. Shut down the engine.

 Copyright © 2004 DETROIT DIESEL CORPORATION

21.4.1 Engine Exhaust System Resolution

Perform the following steps to resolve the engine exhaust system:

1. Visually inspect the engine exhaust system; refer to OEM guidelines.
2. Repair and replace defective exhaust system components; refer to OEM guidelines.
3. Verify exhaust system resolution; refer to section 21.4.1.1.

21.4.1.1 Test the Engine with Replaced Exhaust System

Perform the following steps to determine if replaced engine exhaust system components resolved excessive exhaust smoke condition:

1. Refer to section 21.4 for exhaust caution before preceeding. Start and run the engine.
2. Run the engine at idle with a no-load for approximately 5 minutes, allowing the engine coolant to reach normal operating range.
3. Visually inspect exhaust for excessive smoke.
   [a] If the engine exhaust emission appears normal, no further troubleshooting is required. Shut down the engine.
   [b] If the engine exhaust emission is excessively black or gray, shut down the engine. Check the fuel injectors; refer to section 21.5.

(Rev. 2004) *All information subject to change without notice.*
6SE483 0401 Copyright © 2004 DETROIT DIESEL CORPORATION

21.5 FAULTY FUEL INJECTOR

To determine if a faulty fuel injector is causing the cylinder to misfire, perform the following steps:

1. Install DDL adaptor to the data cable and plug the adaptor into the DDL connector in the vehicle; refer to OEM guidelines.

CAUTION:

To avoid injury before starting and running the engine, ensure the vehicle is parked on a level surface, parking brake is set, and the wheels are blocked.

CAUTION:

Diesel engine exhaust and some of its constituents are known to the State of California to cause cancer, birth defects, and other reproductive harm.

- ☐ **Always start and operate an engine in a well ventilated area.**
- ☐ **If operating an engine in an enclosed area, vent the exhaust to the outside.**
- ☐ **Do not modify or tamper with the exhaust system or emission control system.**

2. Start and run the engine at no-load.
3. From the DDEC III/IV Select Menu, scroll to select ENGINE and press the ENTER key.
4. Scroll to FUEL INJECTOR INFO (CUTOUT) and press the ENTER key.
5. Scroll to select NEW TEST and press the ENTER key.
6. Scroll to select RPM SETTING FOR CCO TEST NORMAL and scroll to select 1000 and press the ENTER key.
7. Scroll to select AUTO and press the ENTER key. Wait for END OF TEST.

NOTE:
If an injector cannot be cutout, an ERROR message will appear. Press FUNC to exit the cylinder cutout function, press the FUNC key.

 Copyright © 2004 DETROIT DIESEL CORPORATION

8. Scroll the list to review the results of the cylinder cutout test. To find suspect injectors, look for a cylinder with a value that is within 0.2° of the NO CUTOUT PULSE WIDTH, by comparing the CUTOUT PULSE WIDTH values to the NO CUTOUT PULSE WIDTH values.
   [a] If any CUTOUT PULSE WIDTH values are within 0.2° of the NO CUTOUT PULSE WIDTH, shut down the engine; refer to section 21.5.1.
   [b] If any CUTOUT PULSE WIDTH values are not within 0.2° of the NO CUTOUT PULSE WIDTH, shut down the engine; refer to section 21.6.

21.5.1 Faulty Fuel Injector Repair

Perform the following steps for faulty fuel injector assembly(s):

1. Remove and replace injector assembly(s) whose values are within 0.2° of the NO CUTOUT PULSE WIDTH; refer to section 2.3.2.
2. Verify replaced injector assembly(s); refer to section 21.5.1.1.

21.5.1.1 Verification of Repair for Faulty Fuel Injector

Perform the following to determine if the replaced fuel injector(s) resolved the excessive exhaust smoke condition:

1. Refer to section 21.5 for exhaust caution before preceeding. Start the engine.
2. Run the engine speed to full load.
3. Visually inspect the exhaust for excessive smoke.
   [a] If the engine exhaust emission appears normal, no further troubleshooting is required. Shut down the engine.
   [b] If the engine exhaust emission is excessive, check for defective turbocharger; refer to section 21.6. Shut down the engine.

(Rev. 2004) *All information subject to change without notice.*
6SE483 0401 Copyright © 2004 DETROIT DIESEL CORPORATION

21.6 DEFECTIVE TURBOCHARGER

To determine if a defective turbocharger is causing excessive exhaust smoke, perform the following:

1. Remove the turbocharger outlet line connected to the crankcase and place the drain line into a suitable container; refer to section 6.6.2.
2. Perform a crankcase pressure test.
   [a] If the engine crankcase pressure is greater than 3 in. H_2O (0.75 kPa), replace the turbocharger; refer to section 21.6.1.
   [b] If the engine crankcase pressure is 3 in. H_2O (0.75 kPa), call the Detroit Diesel Technical Service Group.

21.6.1 Turbocharger Replacement

Perform the following steps to replace a defective turbocharger:

1. Remove defective turbocharger from the engine; refer to section 6.6.2.
2. Tag removed turbocharger for remanufacture.
3. Install a new turbocharger to the engine; refer to section 6.6.7.
4. Verify replacement of new turbocharger; refer to section 21.6.1.1.

 Copyright © 2004 DETROIT DIESEL CORPORATION

21.6.1.1 Test Engine with Replaced Turbocharger

Perform the following steps to determine if a replaced turbocharger resolved the excessive exhaust smoke condition:

CAUTION:

To avoid injury before starting and running the engine, ensure the vehicle is parked on a level surface, parking brake is set, and the wheels are blocked.

CAUTION:

Diesel engine exhaust and some of its constituents are known to the State of California to cause cancer, birth defects, and other reproductive harm.

- ☐ **Always start and operate an engine in a well ventilated area.**
- ☐ **If operating an engine in an enclosed area, vent the exhaust to the outside.**
- ☐ **Do not modify or tamper with the exhaust system or emission control system.**

1. Start the engine.
2. Run the engine speed to full load.
3. Visually inspect the exhaust for excessive smoke.
   [a] If the engine exhaust emission appears normal, no further troubleshooting is required. Shut down the engine.
   [b] If the engine exhaust emission is excessive, shut down the engine. Call Detroit Diesel Technical Service Group.

(Rev. 2004) *All information subject to change without notice.*
6SE483 0401 Copyright © 2004 DETROIT DIESEL CORPORATION

22 EXCESSIVE BLUE SMOKE

Section **Page**

22.1 DEFECTIVE TURBOCHARGER 22-3

22.2 WORN OR DAMAGED VALVE OR CYLINDER KIT 22-6

 Copyright © 2004 DETROIT DIESEL CORPORATION

22.1 DEFECTIVE TURBOCHARGER

To determine if a defective turbocharger is causing excessive exhaust smoke, perform the following:

1. Remove the charge air cooler inlet duct connected between the turbocharger and charge air cooler; see Figure 22-1.

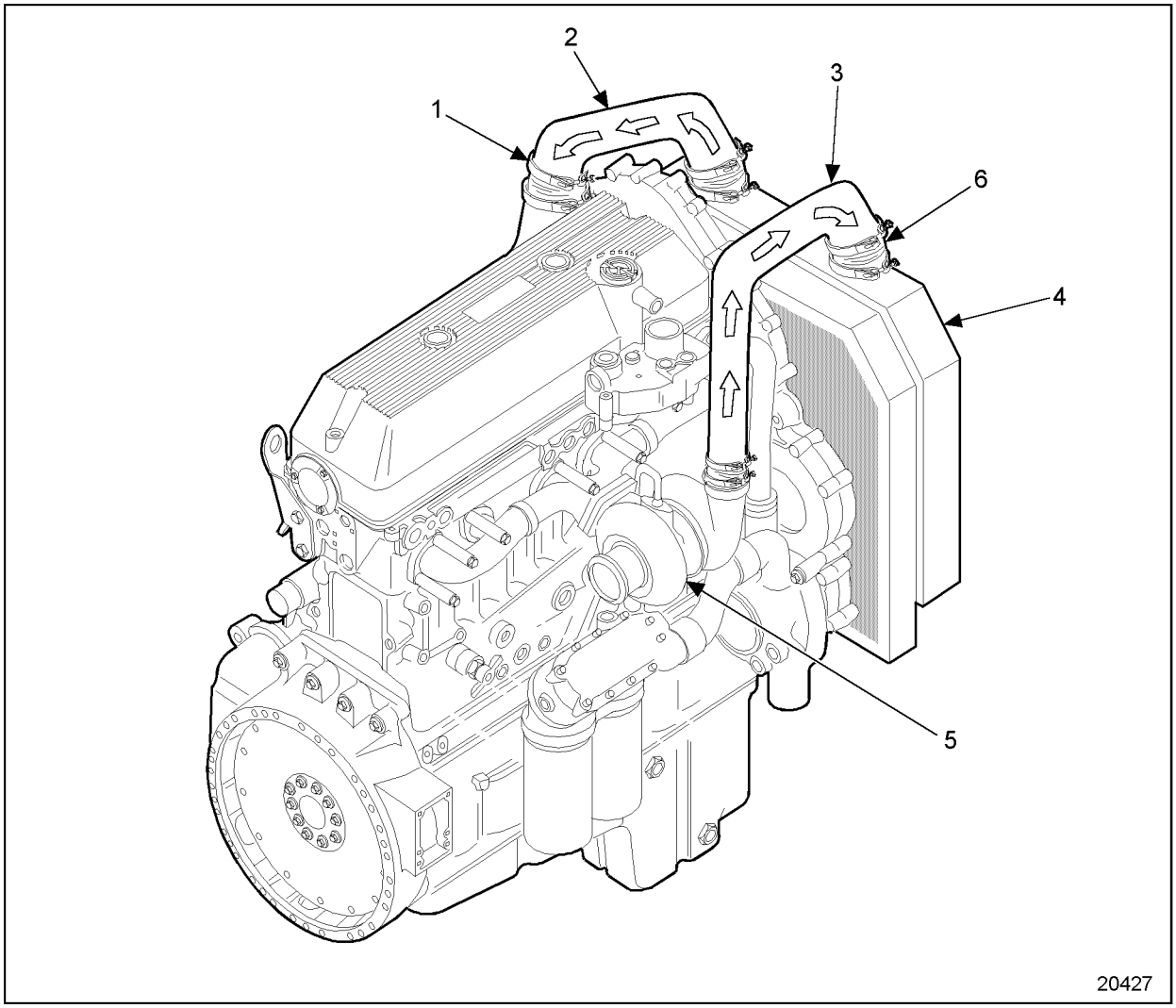

1. Flexible Coupling
2. Charge Air Cooler Outlet Duct
3. Charge Air Cooler Inlet Duct
4. Charge Air Cooler
5. Turbocharger
6. Coupling Hose Clamp

Figure 22-1 Charge Air Cooler and Related Parts

 Copyright © 2004 DETROIT DIESEL CORPORATION

2. Visually inspect the charge air cooler outlet duct.
   [a] If excessive engine lube oil is present, refer to section 22.1.1.
   [b] If no engine lube oil is present, check for worn or damaged valve or cylinder kit, refer to section 22.2.

22.1.1 Turbocharger Replacement

Perform the following steps to replace a defective turbocharger:

1. Remove defective turbocharger from the engine; refer to section 6.6.2.
2. Tag removed turbocharger for remanufacture.
3. Install a replacement turbocharger to the engine; refer to section 6.6.7.
4. Verify replacement of new turbocharger; refer to section 22.1.1.1.

(Rev. 2004) *All information subject to change without notice.*
6SE483 0401 Copyright © 2004 DETROIT DIESEL CORPORATION

22.1.1.1 Test Engine with Replaced Turbocharger

Perform the following steps to determine if a replaced turbocharger resolved the excessive exhaust smoke condition:

CAUTION:

To avoid injury before starting and running the engine, ensure the vehicle is parked on a level surface, parking brake is set, and the wheels are blocked.

CAUTION:

Diesel engine exhaust and some of its constituents are known to the State of California to cause cancer, birth defects, and other reproductive harm.

- ☐ **Always start and operate an engine in a well ventilated area.**
- ☐ **If operating an engine in an enclosed area, vent the exhaust to the outside.**
- ☐ **Do not modify or tamper with the exhaust system or emission control system.**

1. Start and run the engine.
2. Run the engine at idle with a no-load for approximately 5 minutes, allowing the engine coolant to reach normal operating range, 88-96°C (190-210°F).
3. Visually inspect exhaust for excessive smoke.
   [a] If the engine exhaust smoke emission appears normal, no further troubleshooting is required. Shut down the engine.
   [b] If the engine exhaust smoke is excessively black or gray, shut down the engine. Check for worn or damaged valve or cylinder kit; refer to section 22.2.

 Copyright © 2004 DETROIT DIESEL CORPORATION

22.2 WORN OR DAMAGED VALVE OR CYLINDER KIT

To determine if a worn or damaged cylinder kit is causing excessive crankcase pressure, perform the following:

1. Move the vehicle requiring testing to the chassis dynamometer; refer to OEM guidelines.
2. Disconnect air compressor; refer to section 10.1.5.

CAUTION:

To avoid injury before starting and running the engine, ensure the vehicle is parked on a level surface, parking brake is set, and the wheels are blocked.

CAUTION:

Diesel engine exhaust and some of its constituents are known to the State of California to cause cancer, birth defects, and other reproductive harm.

- ☐ **Always start and operate an engine in a well ventilated area.**
- ☐ **If operating an engine in an enclosed area, vent the exhaust to the outside.**
- ☐ **Do not modify or tamper with the exhaust system or emission control system.**

3. Start the engine.
4. Run the engine and bring the engine coolant temperature to normal operating range.
5. Run the vehicle to full load and rated speed.
6. Attach a manometer calibrated to read in inches of water, to the oil dipstick opening.
7. Measure and record crankcase pressure.
8. Shut down the engine.
9. Remove the vehicle form the chassis dynamometer.

(Rev. 2004) *All information subject to change without notice.*
6SE483 0401 Copyright © 2004 DETROIT DIESEL CORPORATION

10. Review the crankcase pressure test.
    [a] If the crankcase pressure was greater than 3 in. H_2O (0.75 kPa), refer to section 22.2.1.
    [b] If the crankcase pressure was less than 3 in. H_2O (0.75 kPa), perform a cylinder compression test.
11. Compare the cylinder compression test results to specifications.
    [a] If cylinder pressure is below specifications, refer to section 22.2.1.
    [b] If cylinder pressure is within specifications, call Detroit Diesel Technical Service Group.

22.2.1 Worn or Damaged Valve or Cylinder Kit Repair

Perform the following steps for worn or damaged valve or cylinder kit:

1. Remove the cylinder head; refer to section 1.2.2.
2. Inspect the cylinder head for worn or damaged valves; refer to section 1.2.3.1.
3. Inspect the cylinder kit components for worn or damaged liners; refer to section 1.21.2.2; pistons or piston rings, refer to section 1.17.3.1.
4. Verify repair to cylinder valve(s) or cylinder kit components; refer to section 22.2.1.1.

22.2.1.1 Test Engine with Repairs Made to Correct Worn or Damaged Valve or Cylinder Kit

Perform the following to determine if the repaired valve or cylinder kit resolved the excessive crankcase pressure:

1. Refer to section 22.2 for exhaust catuion before preceeding. Start the engine.
2. Run the engine and bring the engine coolant temperature to normal operating range, 88-96°C (190-210°F).
3. Run the vehicle to full load and rated speed.
4. Visually inspect exhaust for excessive smoke.
    [a] If the engine exhaust smoke emission appears normal, no further troubleshooting is required. Shut down the engine.
    [b] If the engine exhaust smoke is excessively black or gray, call the Detroit Diesel Technical Service Group. Shut down the engine.

 Copyright © 2004 DETROIT DIESEL CORPORATION

(Rev. 2004) *All information subject to change without notice.*
6SE483 0401 Copyright © 2004 DETROIT DIESEL CORPORATION

23 EXCESSIVE WHITE SMOKE

Section		Page
23.1	IMPROPER GRADE OF FUEL	23-3
23.2	DEFECTIVE FUEL PUMP	23-5
23.3	AERATED FUEL	23-7
23.4	IMPROPER INJECTOR CALIBRATION SETTING (DDEC III/IV ENGINES ONLY)	23-9
23.5	IMPROPER VALVE CLEARANCE OR INJECTOR HEIGHT, WORN OR DAMAGED CAMSHAFT LOBES AND ROLLERS	23-11
23.6	FAULTY FUEL INJECTOR	23-13
23.7	FAULTY ELECTRONIC CONTROL MODULE	23-14

(Rev. 2004) *All information subject to change without notice.*
6SE483 0401 Copyright © 2004 DETROIT DIESEL CORPORATION

23.1 IMPROPER GRADE OF FUEL

To determine if an improper grade of fuel oil is causing excessive white smoke, perform the following:

1. Acquire a fuel oil sample from the vehicle fuel tank(s).
2. Submit fuel oil sample for an ASTM test analysis.
   [a] If the fuel oil meets specifications, check the fuel pump; refer to section 23.2.
   [b] If the fuel oil did not meet specifications, resolve improper grade of fuel; refer to section 23.1.1.

23.1.1 Improper Grade of Fuel Resolution

Perform the following steps to resolve the improper grade of fuel oil:

1. Drain the fuel oil tank(s), refer to OEM guidelines, and dispose of properly.
2. Refill the fuel oil tanks with new fuel oil having a cetane number greater than 40.
3. Verify fuel oil resolution; refer to section 23.1.1.1.

 Copyright © 2004 DETROIT DIESEL CORPORATION

23.1.1.1 Test the Engine with New Fuel Oil

Perform the following steps to determine if the new fuel oil refill resolved the excessive white smoke condition:

CAUTION:

To avoid injury before starting and running the engine, ensure the vehicle is parked on a level surface, parking brake is set, and the wheels are blocked.

CAUTION:

Diesel engine exhaust and some of its constituents are known to the State of California to cause cancer, birth defects, and other reproductive harm.

- ☐ **Always start and operate an engine in a well ventilated area.**
- ☐ **If operating an engine in an enclosed area, vent the exhaust to the outside.**
- ☐ **Do not modify or tamper with the exhaust system or emission control system.**

1. Start and run the engine.
2. Run the engine at idle with a no-load for approximately 5 minutes, allowing the engine coolant to reach normal operating range.
3. Visually inspect exhaust for excessive smoke.
   [a] If the engine exhaust smoke emission appears normal, no further troubleshooting is required. Shut down the engine.
   [b] If the engine exhaust smoke is excessively white, shut down the engine. Check the fuel pump; refer to section 23.2.

(Rev. 2004) *All information subject to change without notice.*
6SE483 0401 Copyright © 2004 DETROIT DIESEL CORPORATION

23.2 DEFECTIVE FUEL PUMP

To determine if the fuel pump is causing excessive white smoke, perform the following steps:

1. Insert a piece of wire through the fuel pump flange drain hole; see Figure 23-1.

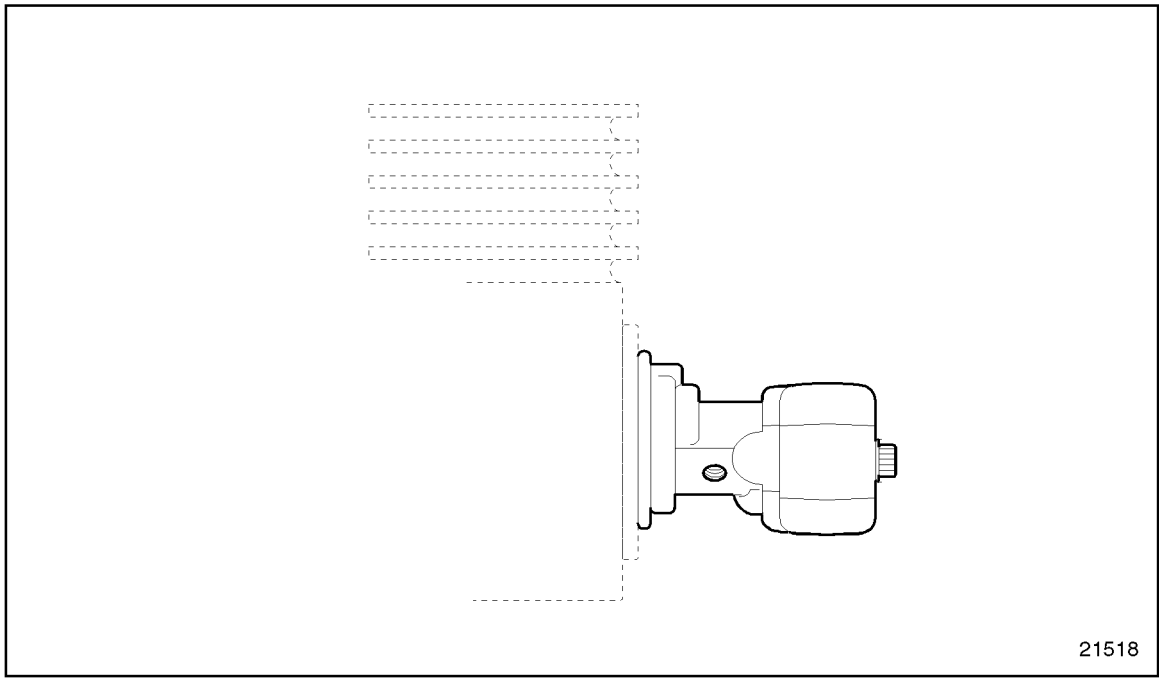

Figure 23-1 Fuel Pump Flange Drain Hole Location

2. Crank the engine momentarily and feel for wire vibration.
   [a] If the wire did not vibrate; refer to section 23.2.1.
   [b] If the wire did vibrate, check for aerated fuel; refer to section 23.3.

23.2.1 Drive Hubs and Coupling Replacement

Perform the following for drive hubs or coupling replacement:

1. Replace the drive hubs or coupling; refer to section 2.9.
2. Verify the drive hubs and coupling replacement; refer to section 23.2.1.1.

 Copyright © 2004 DETROIT DIESEL CORPORATION

23.2.1.1 Engine Test with Replaced Drive Hubs or Replaced Coupling

Perform the following to determine if replaced drive hubs and coupling resolved excessive white smoke:

CAUTION:

To avoid injury before starting and running the engine, ensure the vehicle is parked on a level surface, parking brake is set, and the wheels are blocked.

CAUTION:

Diesel engine exhaust and some of its constituents are known to the State of California to cause cancer, birth defects, and other reproductive harm.

- ☐ **Always start and operate an engine in a well ventilated area.**
- ☐ **If operating an engine in an enclosed area, vent the exhaust to the outside.**
- ☐ **Do not modify or tamper with the exhaust system or emission control system.**

1. Start and run the engine.
2. Run the engine at idle with a no-load for approximately 5 minutes, allowing the engine coolant to reach normal operating range.
3. Visually inspect exhaust for excessive white smoke.
   [a] If the engine exhaust emission appears normal, no further troubleshooting is required. Shut down the engine.
   [b] If the engine exhaust emission is excessively white, shut down the engine. Check for aerated fuel; refer to section 23.3.

(Rev. 2004) *All information subject to change without notice.*
6SE483 0401 Copyright © 2004 DETROIT DIESEL CORPORATION

23.3 AERATED FUEL

To determine if aerated fuel is causing excessive white smoke, perform the following steps:

1. Disconnect the fuel line return hose from the fitting located at the fuel tank; refer to OEM guidelines.
2. Place the open end of the fuel line into a suitable container.

CAUTION:

To avoid injury before starting and running the engine, ensure the vehicle is parked on a level surface, parking brake is set, and the wheels are blocked.

CAUTION:

Diesel engine exhaust and some of its constituents are known to the State of California to cause cancer, birth defects, and other reproductive harm.

- ☐ **Always start and operate an engine in a well ventilated area.**
- ☐ **If operating an engine in an enclosed area, vent the exhaust to the outside.**
- ☐ **Do not modify or tamper with the exhaust system or emission control system.**

3. Start and run the engine.
4. Operate the engine at 1000 r/min.
5. Visually check to see if air bubbles are rising to the surface of the fuel within the container.
   [a] If air bubbles are present, shut down engine; refer to section 23.3.1.
   [b] If air bubbles are not present, shut down engine, check for improper injector calibration setting; refer to section 23.4.

 Copyright © 2004 DETROIT DIESEL CORPORATION

23.3.1 Aerated Fuel Resolution

Perform the following to resolve aerated fuel:

1. Tighten all fuel line connections between fuel tank and fuel pump; refer to OEM guidelines.
2. Visually inspect all fuel lines between fuel tank and fuel pump for leaks.
3. Repair damaged components as required; refer to OEM guidelines.
4. Verify aerated fuel resolution; refer to section 23.3.1.1.

23.3.1.1 Test the Engine with Aerated Fuel Resolution

Perform the following to determine if aerated fuel resolution resolved excessive white smoke condition:

1. Refer to section 23.3 for the exhaust caution before preceeding. Start and run the engine.
2. Run the engine at idle with a no-load for approximately 5 minutes, allowing the engine coolant to reach normal operating range.
3. Visually inspect exhaust for excessive white smoke.
   [a] If the engine exhaust emission appears normal, no further troubleshooting is required. Shut down the engine.
   [b] If the engine exhaust emission is excessively white, shut down the engine. Check for improper injector calibration setting; refer to section 23.4.

(Rev. 2004) *All information subject to change without notice.*
6SE483 0401 Copyright © 2004 DETROIT DIESEL CORPORATION

23.4 IMPROPER INJECTOR CALIBRATION SETTING (DDEC III/IV ENGINES ONLY)

To determine if an improper injector calibration setting is causing excessive white smoke, perform the following:

1. Check for improper injector calibration setting (DDEC III/IV engine only); refer to section 16.3.
2. Check for improper injector setting repair; refer to section 16.3.1.
3. Verify injector setting repair; refer to section 23.4.1.

23.4.1 Test Engine with Corrected Injector Setting

Perform the following to determine if injector setting repair resolved excessive white smoke:

CAUTION:

To avoid injury before starting and running the engine, ensure the vehicle is parked on a level surface, parking brake is set, and the wheels are blocked.

CAUTION:

Diesel engine exhaust and some of its constituents are known to the State of California to cause cancer, birth defects, and other reproductive harm.

- ☐ **Always start and operate an engine in a well ventilated area.**
- ☐ **If operating an engine in an enclosed area, vent the exhaust to the outside.**
- ☐ **Do not modify or tamper with the exhaust system or emission control system.**

1. Start and run the engine.

 Copyright © 2004 DETROIT DIESEL CORPORATION

2. Run the engine at idle with a no-load for approximately 5 minutes, allowing the engine coolant to reach normal operating range.
3. Visually inspect exhaust for excessive white smoke.
   [a] If the engine exhaust emission appears normal, no further troubleshooting is required. Shut down the engine.
   [b] If the engine exhaust emission is excessively white, shut down the engine. Check for improper valve clearance or injector height, worn or damaged camshaft lobes and rollers; refer to section 23.5.

(Rev. 2004) *All information subject to change without notice.*
6SE483 0401 Copyright © 2004 DETROIT DIESEL CORPORATION

23.5 IMPROPER VALVE CLEARANCE OR INJECTOR HEIGHT, WORN OR DAMAGED CAMSHAFT LOBES AND ROLLERS

To determine if an improper valve clearance or injector height, worn or damaged camshaft lobes and rollers is causing excessive white smoke, perform the following:

1. Check for improper valve clearance or injector height, worn or damaged camshaft lobes and rollers; refer to section 16.4.
2. Check for improper valve clearance or injector height repair; refer to section 16.4.1.
3. Verify valve clearance or injector height, worn or damaged camshaft lobes and rollers repair; refer to section 23.5.1.

 Copyright © 2004 DETROIT DIESEL CORPORATION

23.5.1 Test Engine with Corrected Valve Clearance or Injector Height, Worn or Damaged Camshaft Lobes and Rollers

Perform the following to determine if the valve clearance or injector height, worn or damaged camshaft lobes and rollers repair resolved excessive white smoke:

CAUTION:

To avoid injury before starting and running the engine, ensure the vehicle is parked on a level surface, parking brake is set, and the wheels are blocked.

CAUTION:

Diesel engine exhaust and some of its constituents are known to the State of California to cause cancer, birth defects, and other reproductive harm.

- ☐ **Always start and operate an engine in a well ventilated area.**
- ☐ **If operating an engine in an enclosed area, vent the exhaust to the outside.**
- ☐ **Do not modify or tamper with the exhaust system or emission control system.**

1. Start and run the engine.
2. Run the engine at idle with a no-load for approximately 5 minutes, allowing the engine coolant to reach normal operating range.
3. Visually inspect exhaust for excessive white smoke.
   [a] If the engine exhaust emission appears normal, no further troubleshooting is required. Shut down the engine.
   [b] If the engine exhaust emission is excessively white, shut down the engine. Check for faulty fuel injector; refer to section 23.6.

(Rev. 2004) *All information subject to change without notice.*
6SE483 0401 Copyright © 2004 DETROIT DIESEL CORPORATION

23.6 FAULTY FUEL INJECTOR

To determine if a faulty fuel injector is causing excessive white smoke, perform the following:

1. Check for faulty fuel injector; refer to section 16.5.
2. Check for faulty fuel injector repair; refer to section 16.5.1.
3. Verify fuel injector repair; refer to section 23.6.1.

23.6.1 Test the Engine with Repaired Fuel Injector

Perform the following to determine if the fuel injector repair resolved excessive white smoke:

CAUTION:

To avoid injury before starting and running the engine, ensure the vehicle is parked on a level surface, parking brake is set, and the wheels are blocked.

CAUTION:

Diesel engine exhaust and some of its constituents are known to the State of California to cause cancer, birth defects, and other reproductive harm.

- ☐ **Always start and operate an engine in a well ventilated area.**
- ☐ **If operating an engine in an enclosed area, vent the exhaust to the outside.**
- ☐ **Do not modify or tamper with the exhaust system or emission control system.**

1. Start and run the engine.
2. Run the engine at idle with a no-load for approximately 5 minutes, allowing the engine coolant to reach normal operating range.
3. Visually inspect exhaust for excessive white smoke.
   [a] If the engine exhaust emission appears normal, no further troubleshooting is required. Shut down the engine.
   [b] If the engine exhaust emission is excessively white, shut down the engine. Check for faulty electronic control module; refer to section 23.7.

 Copyright © 2004 DETROIT DIESEL CORPORATION

23.7 FAULTY ELECTRONIC CONTROL MODULE

To determine if a faulty electronic control module is causing excessive white smoke, perform the following:

1. Check for faulty electronic control module; refer to section 16.6.
2. Check for faulty ECM repair; refer to section 16.6.1.
3. Verify ECM repair; refer to section 23.7.1.

23.7.1 Test Engine with Repair to the Electronic Control Unit

Perform the following to determine if the ECM repair resolved excessive white smoke:

CAUTION:

To avoid injury before starting and running the engine, ensure the vehicle is parked on a level surface, parking brake is set, and the wheels are blocked.

CAUTION:

Diesel engine exhaust and some of its constituents are known to the State of California to cause cancer, birth defects, and other reproductive harm.

- ☐ **Always start and operate an engine in a well ventilated area.**
- ☐ **If operating an engine in an enclosed area, vent the exhaust to the outside.**
- ☐ **Do not modify or tamper with the exhaust system or emission control system.**

1. Start and run the engine.
2. Run the engine at idle with a no-load for approximately 5 minutes, allowing the engine coolant to reach normal operating range.
3. Visually inspect exhaust for excessive white smoke.
   [a] If the engine exhaust emission appears normal, no further troubleshooting is required. Shut down the engine.
   [b] If the engine exhaust emission is excessively white, shut down the engine. Call Detroit Diesel Technical Service Group.

(Rev. 2004) *All information subject to change without notice.*
6SE483 0401 Copyright © 2004 DETROIT DIESEL CORPORATION

24 ROUGH RUNNING OR STALLING

Section		Page
24.1	LOW BATTERY VOLTAGE	24-3
24.2	AERATED FUEL OIL	24-5
24.3	INSUFFICIENT FUEL OIL FLOW	24-6
24.4	HIGH FUEL OIL TEMPERATURE RETURN	24-8
24.5	IMPROPER INJECTOR CALIBRATION SETTING (DDEC III/IV ENGINES ONLY)	24-11
24.6	LOW COMPRESSION PRESSURE	24-13

 Copyright © 2004 DETROIT DIESEL CORPORATION

24.1 LOW BATTERY VOLTAGE

To determine if a weak battery is causing rough running or stalling, perform the following steps:

CAUTION:

To avoid injury from battery explosion or contact with battery acid, work in a well-ventilated area, wear protective clothing, and avoid sparks or flames near the battery. Always establish correct polarity before connecting cables to the battery or battery circuit. If you come in contact with battery acid:

- ☐ **Flush your skin with water.**
- ☐ **Apply baking soda or lime to help neutralize the acid.**
- ☐ **Flush your eyes with water.**
- ☐ **Get medical attention immediately.**

CAUTION:

To avoid injury before starting and running the engine, ensure the vehicle is parked on a level surface, parking brake is set, and the wheels are blocked.

CAUTION:

Diesel engine exhaust and some of its constituents are known to the State of California to cause cancer, birth defects, and other reproductive harm.

- ☐ **Always start and operate an engine in a well ventilated area.**
- ☐ **If operating an engine in an enclosed area, vent the exhaust to the outside.**
- ☐ **Do not modify or tamper with the exhaust system or emission control system.**

1. Start and run the engine.

 Copyright © 2004 DETROIT DIESEL CORPORATION

2. Measure the battery voltage; refer to OEM guidelines.
   [a] If the battery voltage is greater than or equal to 10.5 volts, check for aerated fuel oil; refer to section 24.2.
   [b] If the battery voltage is less than 10.5 volts, replace the battery; refer to section 24.1.1.

24.1.1 Battery Replacement

Perform the following steps for battery replacement:

1. Remove and replace the battery; refer to OEM guidelines.
2. Verify battery replacement; refer to section 24.1.1.1.

24.1.1.1 Test Engine with Replaced Battery

Perform the following steps to determine if the battery replacement resolved difficulty:

1. Refer to section 24 for exhaust caution before preceeding. Start and run the engine.
2. Run the engine at idle with a no-load for approximately 5 minutes, allowing the engine coolant to reach normal operating range, 88-96°C (190-210°F).
   [a] If the engine is not running rough or stalling, no further troubleshooting is required. Shut down the engine.
   [b] If the engine is running rough or stalling shut down the engine. Check for aerated fuel oil; refer to section 24.2.

(Rev. 2004) *All information subject to change without notice.*
6SE483 0401 Copyright © 2004 DETROIT DIESEL CORPORATION

24.2 AERATED FUEL OIL

To determine if aerated fuel is causing rough running or stalling, perform the following steps:

1. Test for aerated fuel; refer to section 23.3.
2. Aerated fuel resolution, refer to section 23.3.1.
3. Verify aerated fuel resolution; refer to section 24.2.1.

24.2.1 Test Engine with Aerated Fuel Resolution

Perform the following steps to determine if the aerated fuel resolution resolved rough running or stalling condition:

CAUTION:

To avoid injury before starting and running the engine, ensure the vehicle is parked on a level surface, parking brake is set, and the wheels are blocked.

CAUTION:

Diesel engine exhaust and some of its constituents are known to the State of California to cause cancer, birth defects, and other reproductive harm.

- ☐ **Always start and operate an engine in a well ventilated area.**
- ☐ **If operating an engine in an enclosed area, vent the exhaust to the outside.**
- ☐ **Do not modify or tamper with the exhaust system or emission control system.**

1. Start and run the engine.
2. Run the engine through its operating range with no-load for approximately 5 minutes, allowing the engine coolant to reach normal operating range, 88-96°C (190-210°F).
   [a] If the engine is not running rough or stalling, no further troubleshooting is required. Shut down the engine.
   [b] If the engine is running rough or stalling, shut down the engine. Check for insufficient fuel oil flow; refer to section 24.3.

 Copyright © 2004 DETROIT DIESEL CORPORATION

24.3 INSUFFICIENT FUEL OIL FLOW

To determine if insufficient fuel oil flow is causing rough running or stalling, do the following steps:

1. Perform a fuel oil flow test.
2. Analyze the fuel oil flow test results.
   [a] If the fuel oil rate is 246 L/hr (65 gal/hr) or more, no further troubleshooting is required; refer to section 24.4.
   [b] If the fuel oil rate is less than 246 L/hr (65 gal/hr), resolve the insufficient fuel oil flow; refer to section 24.3.1.

24.3.1 Insufficient Fuel Oil Flow Resolution

Perform the following steps to resolve the insufficient fuel oil flow:

1. Replace the fuel filter(s); refer to section 2.10.1.

NOTE:
Always fill the filter(s) with clean fuel oil before installing. Turn the filter(s) until they contact the gasket fully. Then, turn them an additional two-thirds by hand.

2. Inspect the fuel lines for restrictions due to pinching, kinking or other damage. If damage is found, repair as necessary; refer to OEM guidelines.
3. Inspect the cylinder head for a correct restricted fitting. If an incorrect fitting is found, replace with a new fitting; refer to section 1.2.3.1.
4. Inspect the fuel return check valve for restrictive movement; refer to section 2.16.3.1.
5. Inspect the fuel pump drive assembly. If damage is found, repair as necessary; refer to section 2.8.3.1.
6. Verify repairs done to correct insufficient fuel oil flow; refer to section 24.3.1.1.

(Rev. 2004) *All information subject to change without notice.*
6SE483 0401 Copyright © 2004 DETROIT DIESEL CORPORATION

24.3.1.1 Test the Engine with Resolved Fuel Oil Flow

Perform the following steps to determine if the fuel oil flow resolution resolved rough running or stalling:

CAUTION:

To avoid injury before starting and running the engine, ensure the vehicle is parked on a level surface, parking brake is set, and the wheels are blocked.

CAUTION:

Diesel engine exhaust and some of its constituents are known to the State of California to cause cancer, birth defects, and other reproductive harm.

- ☐ **Always start and operate an engine in a well ventilated area.**
- ☐ **If operating an engine in an enclosed area, vent the exhaust to the outside.**
- ☐ **Do not modify or tamper with the exhaust system or emission control system.**

1. Start and run the engine.
2. Run the engine at idle with a no-load for approximately 5 minutes, allowing the engine coolant to reach normal operating range, 88-96°C (190-210°F).
   [a] If the engine is not running rough or stalling, no further troubleshooting is required. Shut down the engine.
   [b] If the engine is running rough or stalling, shut down the engine. Check for high fuel oil temperature return; refer to section 24.4.

 Copyright © 2004 DETROIT DIESEL CORPORATION

24.4 HIGH FUEL OIL TEMPERATURE RETURN

To determine if high fuel oil temperature return is causing rough running or stalling, perform the following steps:

1. Install the Diagnostic Data Reader to the vehicles Display Data Line Adaptor, see Figure 24-1; refer to OEM guidelines.

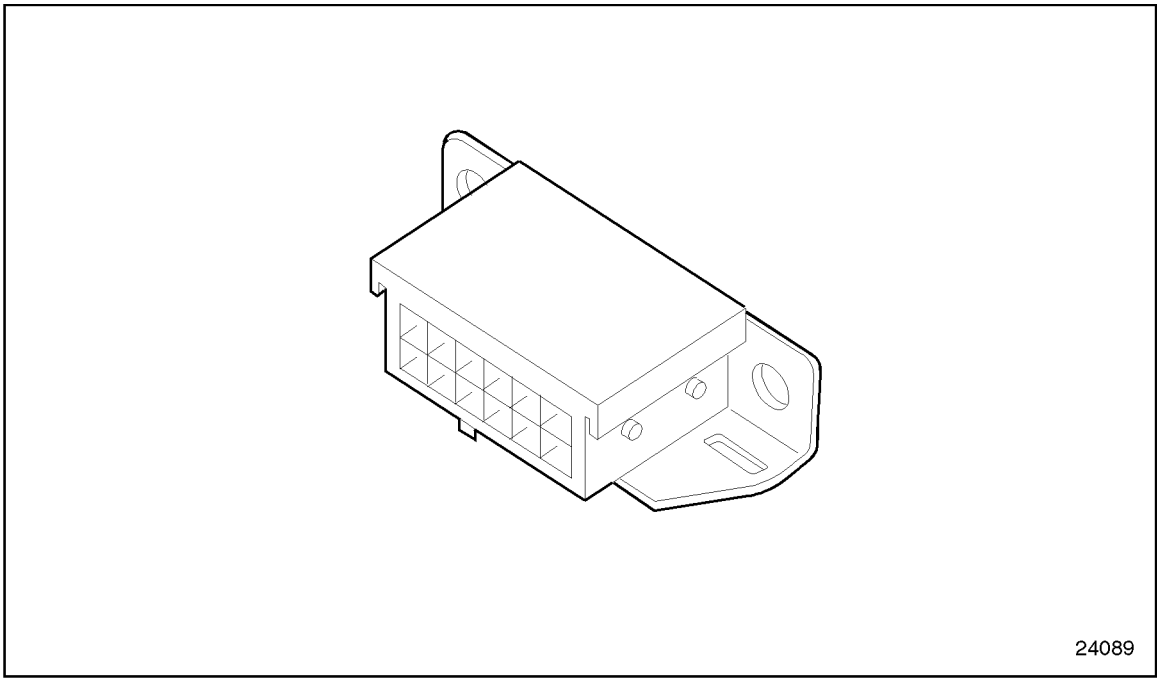

Figure 24-1 Typical Display Data Line Adaptor

(Rev. 2004) *All information subject to change without notice.*
6SE483 0401 Copyright © 2004 DETROIT DIESEL CORPORATION

CAUTION:

To avoid injury before starting and running the engine, ensure the vehicle is parked on a level surface, parking brake is set, and the wheels are blocked.

CAUTION:

Diesel engine exhaust and some of its constituents are known to the State of California to cause cancer, birth defects, and other reproductive harm.

- ☐ **Always start and operate an engine in a well ventilated area.**
- ☐ **If operating an engine in an enclosed area, vent the exhaust to the outside.**
- ☐ **Do not modify or tamper with the exhaust system or emission control system.**

2. Start and run the engine.
3. Run the engine at idle with a no-load for approximately 5 minutes, allowing the engine coolant to reach normal operating range, 88-96°C (190-210°F).
   [a] If the return fuel oil temperature is less than or equal to 60°C (140°F), check for improper injector calibration setting; refer to section 24.5.
   [b] If the return fuel oil temperature is greater than 60°C (140°F), resolve the high fuel oil temperature; refer to section 24.4.1.

24.4.1 High Fuel Oil Temperature Resolution

Perform the following steps to resolve high fuel oil temperature:

1. Remove and replace fuel oil filter(s); refer to section 2.10.1.
2. Inspect check valve for any restricted fitting; refer to section 2.16.2.
3. Replace both the restrictive fitting or check valve; refer to section 2.16.2.
4. Verify fuel oil filter(s) replacement; refer to section 24.4.1.1.

 Copyright © 2004 DETROIT DIESEL CORPORATION

24.4.1.1 Test the Engine with Replaced Oil Filters

Perform the following steps to determine if the replaced oil filter(s) resolved the rough running or stalling condition:

1. Refer to section 24.4 for exhaust caution before preceeding. Start and run the engine.
2. Run the engine through its operating range with no-load for approximately 5 minutes, allowing the engine coolant to reach normal operating range, 88-96°C (190-210°F).
   [a] If the engine is not running rough or stalling, no further troubleshooting is required. Shut down the engine.
   [b] If the engine is running rough or stalling, shut down the engine. Check for improper injector calibration setting; refer to section 24.5.

(Rev. 2004) *All information subject to change without notice.*
6SE483 0401 Copyright © 2004 DETROIT DIESEL CORPORATION

24.5 IMPROPER INJECTOR CALIBRATION SETTING (DDEC III/IV ENGINES ONLY)

To determine if improper injector calibration setting (DDEC III/IV engines only) is causing rough running or stalling, perform the following steps:

1. Test for improper injector setting; refer to section 16.3.
2. Compare the calibration code(s) shown on the Diagnostic Data Reader display with the two digit calibration code(s) on the injector(s). See Figure 24-2.

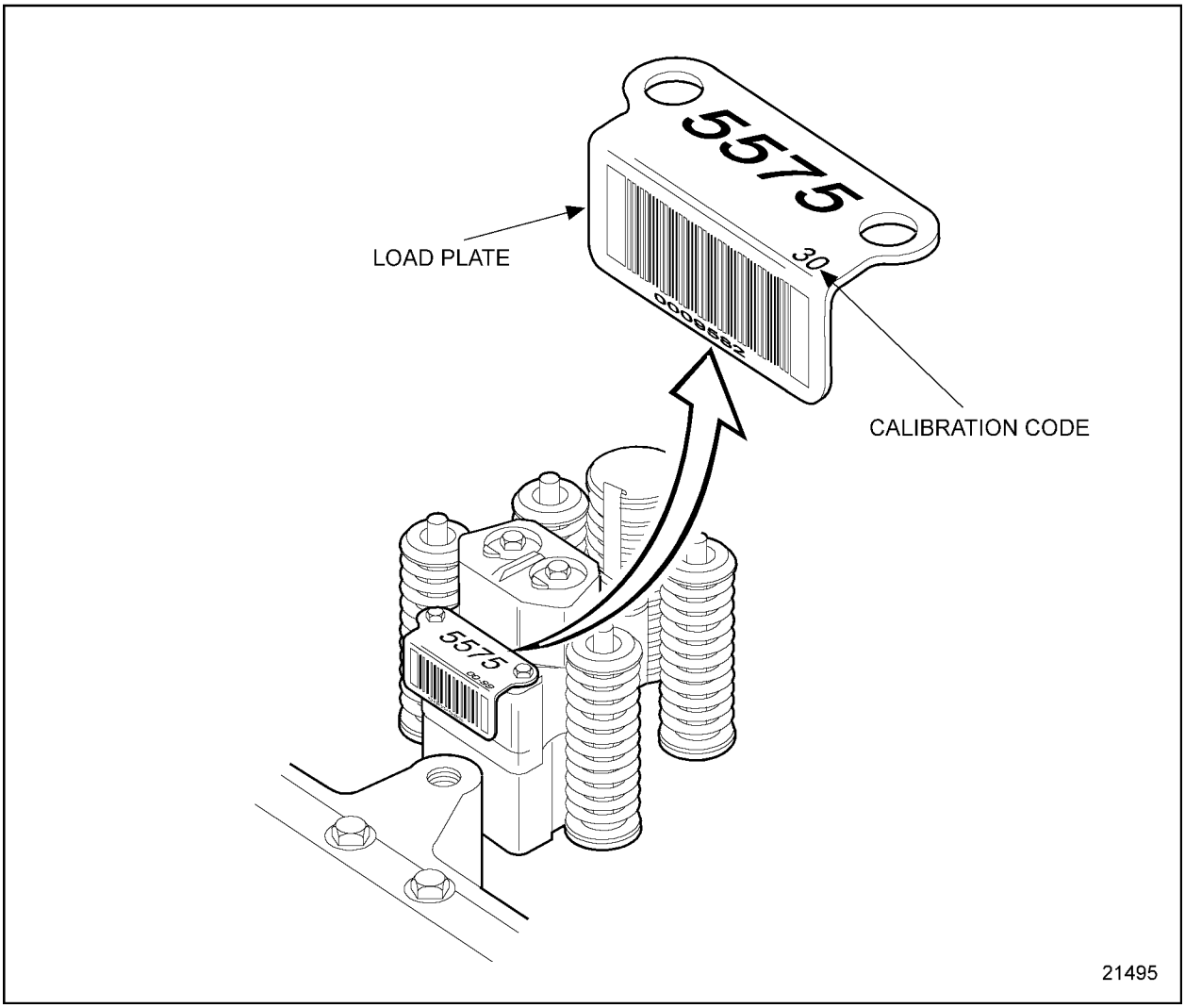

Figure 24-2 Injector Calibration Code

[a] If the calibration codes match, check compression pressure; refer to section 24.6.

[b] If the calibration code on the display is different then the calibration code on the suspect injector for that cylinder, the injector setting must be reset, see Figure 24-2; refer to section 24.5.1.

 Copyright © 2004 DETROIT DIESEL CORPORATION

24.5.1 Improper Injector Setting Repair

Perform the following steps to recalibrate improper injector setting:

1. Reset incorrect injector setting; refer to section 16.3.1.
2. Verify injector setting repair; refer to section 24.5.1.1.

24.5.1.1 Test the Engine with Corrected Injector Setting

Perform the following steps to determine if the corrected injector setting resolved rough running or stalling:

CAUTION:

To avoid injury before starting and running the engine, ensure the vehicle is parked on a level surface, parking brake is set, and the wheels are blocked.

CAUTION:

Diesel engine exhaust and some of its constituents are known to the State of California to cause cancer, birth defects, and other reproductive harm.

- ☐ **Always start and operate an engine in a well ventilated area.**
- ☐ **If operating an engine in an enclosed area, vent the exhaust to the outside.**
- ☐ **Do not modify or tamper with the exhaust system or emission control system.**

1. Start and run the engine.
2. Run the engine through its operating range with no-load for approximately 5 minutes, allowing the engine coolant to reach normal operating range, 88-96°C (190-210°F).
   [a] If the engine is not running rough or stalling, no further troubleshooting is required. Shut down the engine.
   [b] If the engine is running rough or stalling, shut down the engine. Check for low compression pressure; refer to section 24.6.

(Rev. 2004) *All information subject to change without notice.*
6SE483 0401 Copyright © 2004 DETROIT DIESEL CORPORATION

24.6 LOW COMPRESSION PRESSURE

To determine if low compression pressure is causing rough running or stalling, perform the following steps:

1. Perform a cylinder compression test.
2. Compare cylinder compression test results to specifications.
   [a] If cylinder pressure is within specifications, call Detroit Diesel Technical Service.
   [b] If cylinder pressure is below specifications, refer to section 24.6.1.

24.6.1 Low Compression Repair

Perform the following steps for low compression repair:

1. Perform low compression repair; refer to section 17.13.1.
2. Verify repairs to cylinder head valve or cylinder kit components; refer to section 24.6.1.1.

 Copyright © 2004 DETROIT DIESEL CORPORATION

24.6.1.1 Test Engine with Repaired Cylinder Head Valve(s) and Cylinder Kit

Perform the following steps to determine if the cylinder head valve and cylinder kit repair resolved starting difficulty:

CAUTION:

To avoid injury before starting and running the engine, ensure the vehicle is parked on a level surface, parking brake is set, and the wheels are blocked.

CAUTION:

Diesel engine exhaust and some of its constituents are known to the State of California to cause cancer, birth defects, and other reproductive harm.

- ☐ **Always start and operate an engine in a well ventilated area.**
- ☐ **If operating an engine in an enclosed area, vent the exhaust to the outside.**
- ☐ **Do not modify or tamper with the exhaust system or emission control system.**

1. Start and run the engine.
2. Run the engine through its operating range with no-load for approximately 5 minutes, allowing the engine coolant to reach normal operating range, 88-96°C (190-210°F).
   [a] If the engine is not running rough or stalling, no further troubleshooting is required. Shut down the engine.
   [b] If the engine is running rough or stalling, shut down the engine. Call Detroit Diesel Technical Service.

(Rev. 2004) *All information subject to change without notice.*
6SE483 0401 Copyright © 2004 DETROIT DIESEL CORPORATION

25 LACK OF POWER

Section		Page
25.1	AERATED FUEL	25-3
25.2	HIGH FUEL PRESSURE	25-5
25.3	HIGH FUEL OIL TEMPERATURE RETURN	25-9
25.4	RESTRICTED AIR CLEANER ELEMENT	25-11
25.5	RESTRICTED OR CRACKED CHARGE AIR COOLER OR LEAKING INTAKE MANIFOLD	25-13
25.6	FAULTY EXHAUST SYSTEM	25-15
25.7	HIGH INLET AIR TEMPERATURE	25-17
25.8	HIGH ALTITUDE OPERATION	25-19
25.9	INCORRECT CAMSHAFT TIMING	25-21

 Copyright © 2004 DETROIT DIESEL CORPORATION

25.1 AERATED FUEL

To determine if aerated fuel is causing lack of power, perform the following steps:

1. Test for aerated fuel; refer to section 23.3.
2. Visually check to see if air bubbles are rising to the surface of the fuel within the container.
   [a] If air bubbles are not present, shut down engine, check for high fuel pressure; refer to section 25.2.
   [b] If air bubbles are present, shut down engine; refer to section 25.1.1.

25.1.1 Aerated Fuel Resolution

Perform the following steps to resolve aerated fuel:

1. Perform aerated fuel repair; refer to section 23.3.1.
2. Verify aerated fuel resolution; refer to section 25.1.1.1.

 Copyright © 2004 DETROIT DIESEL CORPORATION

25.1.1.1 Test the Engine with Aerated Fuel Resolution

Perform the following steps to determine if aerated fuel resolution resolved lack of power condition:

CAUTION:

To avoid injury before starting and running the engine, ensure the vehicle is parked on a level surface, parking brake is set, and the wheels are blocked.

CAUTION:

Diesel engine exhaust and some of its constituents are known to the State of California to cause cancer, birth defects, and other reproductive harm.

- ☐ **Always start and operate an engine in a well ventilated area.**
- ☐ **If operating an engine in an enclosed area, vent the exhaust to the outside.**
- ☐ **Do not modify or tamper with the exhaust system or emission control system.**

1. Start and run the engine.
2. Run the engine at idle with a no-load for approximately 5 minutes, allowing the engine coolant to reach normal operating range.
3. Test drive the vehicle to ensure lack of power has been resolved.
   [a] If no lack of power occurred during the test drive, no further troubleshooting is required. Shut down the engine.
   [b] If lack of power occurred during the test drive, shut down the engine. Check for high fuel pressure; refer to section 25.2.

(Rev. 2004) *All information subject to change without notice.*
6SE483 0401 Copyright © 2004 DETROIT DIESEL CORPORATION

25.2 HIGH FUEL PRESSURE

To determine if high fuel pressure is causing lack of power, perform the following steps:

1. Remove either the fuel pressure sensor (FPS) or fuel temperature sensor (FTS) fitting from the secondary filter, if equipped; see Figure 25-1 for FPS and see Figure 25-2 for FTS.

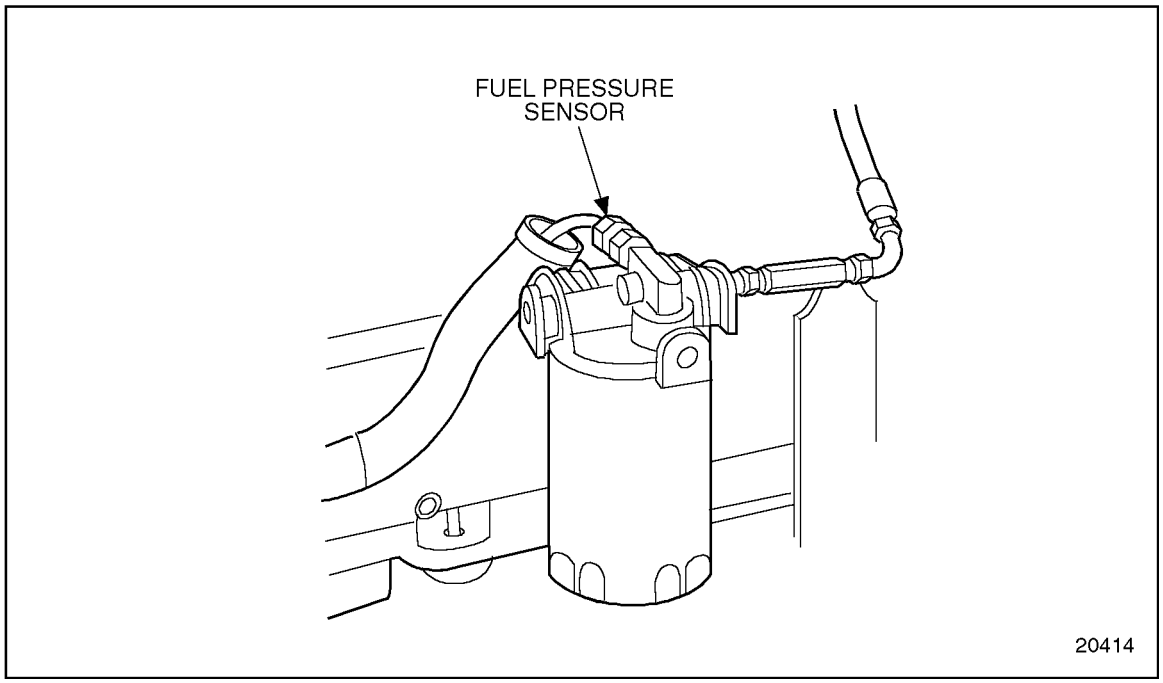

Figure 25-1 Engine Fuel Pressure Sensor

 Copyright © 2004 DETROIT DIESEL CORPORATION

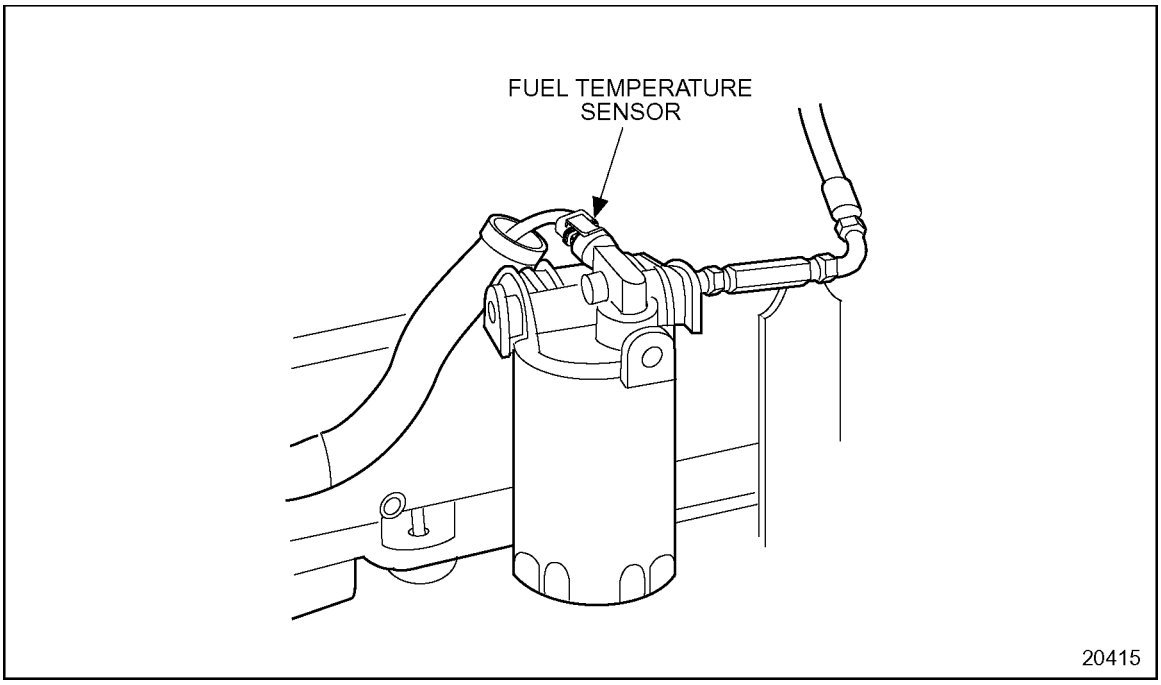

Figure 25-2 Engine Fuel Temperature Sensor

2. Install a tee fitting between the secondary filter and fuel outlet line.
3. Attach a calibrated gauge capable of reading 0 - 100 lb·in.^{2}to the tee fitting.

(Rev. 2004) *All information subject to change without notice.*
6SE483 0401 Copyright © 2004 DETROIT DIESEL CORPORATION

CAUTION:

To avoid injury before starting and running the engine, ensure the vehicle is parked on a level surface, parking brake is set, and the wheels are blocked.

CAUTION:

Diesel engine exhaust and some of its constituents are known to the State of California to cause cancer, birth defects, and other reproductive harm.

- ☐ **Always start and operate an engine in a well ventilated area.**
- ☐ **If operating an engine in an enclosed area, vent the exhaust to the outside.**
- ☐ **Do not modify or tamper with the exhaust system or emission control system.**

4. Start and run the engine to the speeds listed in Table 25-1 and record the fuel pressure:

NOTE:
When checking fuel pressure, start the engine, run at the speeds listed in Table 25-1, and record fuel pressure. Shut down the engine.

Engine Speed, r/min	Fuel Pressure, psi (kPa)
600	15 - 22 psi (103-152)
1200 - 1300	30 - 45 psi (207-310)
1800 - 2100	65 - 80 psi (448 - 552)

Table 25-1 Fuel Pressure at Various Speeds

5. Shut down the engine.
6. Remove the tee fitting and calibrated gauge from the secondary filter.
7. Reinstall the FTS (refer to section 2.36.3) or FPS (refer to section 2.35.3) sensors, whichever was removed.

 Copyright © 2004 DETROIT DIESEL CORPORATION

8. Analyze the measured fuel pressure readings.
   [a] If the fuel oil pressure is within specification listed in Table 25-1, check for high fuel oil temperature return; refer to section 25.3.
   [b] If the fuel oil pressure is greater than specifications listed in Table 25-1, refer to section 25.2.1.

25.2.1 Restricted Fitting and Check Valve Replacement

Perform the following steps to replace the restricted fitting and check valve.

1. Remove the restricted fitting; refer to section 2.16.2.
2. Install a new restricted fitting; refer to section 2.16.4.
3. Remove the check valve; refer to OEM guidelines.
4. Install a new check valve; refer to OEM guidelines
5. Verify check valve and restricted fitting replacement; refer to section 25.2.1.1.

NOTICE:
Do not increase the size of the orifice in restricted fittings. Increasing restricted fittling hole size can cause injector caviation, resulting in reduced durability of injectors and other engine components, and increased engine emissions.

25.2.1.1 Test the Engine with Replaced Check Valve and Restricted Fitting

Perform the following steps to determine if the replaced check valve and restricted fitting resolved lack of power condition:

1. Refer to section 25.2 for exhaust caution before preceeding. Start and run the engine.
2. Run the engine at idle with a no-load for approximately 5 minutes, allowing the engine coolant to reach normal operating range.
3. Test drive the vehicle to ensure lack of power has been resolved.
   [a] If no lack of power occurred during the test drive, no further troubleshooting is required. Shut down the engine.
   [b] If lack of power occurred during the test drive, shut down the engine. Check for high fuel oil temperature return; refer to section 25.3.

(Rev. 2004) *All information subject to change without notice.*
6SE483 0401 Copyright © 2004 DETROIT DIESEL CORPORATION

25.3 HIGH FUEL OIL TEMPERATURE RETURN

To determine if high fuel oil temperature return is causing lack of power, perform the following steps:

1. Test for high fuel oil temperature return; refer to section 24.4.
2. Analyze the high fuel oil temperature test results.
   [a] If the return fuel oil temperature is less than or equal to 60°C (140°F), check for air cleaner restriction; refer to section 25.4.
   [b] If the return fuel oil temperature is greater than 60°C (140°F), resolve the high fuel oil temperature return condition; refer to section 25.3.1.

25.3.1 High Fuel Oil Temperature Resolution

Perform the following steps to resolve high fuel oil temperature return:

1. Remove and replace fuel oil filter(s); refer to section 2.10.1.
2. Inspect the check valve for a restricted fitting, replace if necessary; refer to section 2.16.2.
3. Verify high fuel oil temperature repair; refer to section 25.3.1.1.

 Copyright © 2004 DETROIT DIESEL CORPORATION

25.3.1.1 Test the Engine with Resolved High Fuel Oil Temperature

Perform the following steps to determine if high fuel oil temperature repairs resolved lack of power condition:

CAUTION:

To avoid injury before starting and running the engine, ensure the vehicle is parked on a level surface, parking brake is set, and the wheels are blocked.

CAUTION:

Diesel engine exhaust and some of its constituents are known to the State of California to cause cancer, birth defects, and other reproductive harm.

- ☐ **Always start and operate an engine in a well ventilated area.**
- ☐ **If operating an engine in an enclosed area, vent the exhaust to the outside.**
- ☐ **Do not modify or tamper with the exhaust system or emission control system.**

1. Start and run the engine.
2. Test drive the vehicle to ensure lack of power has been resolved.
   [a] If lack of power did not occur during the test drive, no further troubleshooting is required. Shut down the engine.
   [b] If lack of power occurred during the test drive, shut down the engine. Check for a restricted air cleaner element; refer to section 25.4.

(Rev. 2004) *All information subject to change without notice.*
6SE483 0401 Copyright © 2004 DETROIT DIESEL CORPORATION

25.4 RESTRICTED AIR CLEANER ELEMENT

To determine if a restricted air cleaner element is causing lack of power, perform the following steps:

1. Remove the air filter element from the air cleaner container; refer to OEM guidelines.
2. Visually inspect the air cleaner element for damage or clogging.
   [a] If no damage or clogging is found, check the charge air cooler; refer to section 25.5.
   [b] If damage or clogging is found; refer to section 25.4.1.

25.4.1 Air Filter Element Replacement

Perform the following steps to replace the air filter element:

1. Remove and replace the damaged or clogged air filter element; refer to OEM guidelines.
2. Verify air filter element replacement; refer to section 25.4.1.1.

 Copyright © 2004 DETROIT DIESEL CORPORATION

25.4.1.1 Test the Engine with Replaced Air Filter Element

Perform the following steps to determine if the new filter element resolved lack of power:

CAUTION:

To avoid injury before starting and running the engine, ensure the vehicle is parked on a level surface, parking brake is set, and the wheels are blocked.

CAUTION:

Diesel engine exhaust and some of its constituents are known to the State of California to cause cancer, birth defects, and other reproductive harm.

- ☐ **Always start and operate an engine in a well ventilated area.**
- ☐ **If operating an engine in an enclosed area, vent the exhaust to the outside.**
- ☐ **Do not modify or tamper with the exhaust system or emission control system.**

1. Start and run the engine.
2. Test drive the vehicle to ensure lack of power has been resolved.
   [a] If lack of power did not occur during the test drive, no further troubleshooting is required. Shut down the engine.
   [b] If lack of power occurred during the test drive, shut down the engine. Check the charge air cooler; refer to section 25.5.

(Rev. 2004) *All information subject to change without notice.*
6SE483 0401 Copyright © 2004 DETROIT DIESEL CORPORATION

25.5 RESTRICTED OR CRACKED CHARGE AIR COOLER OR LEAKING INTAKE MANIFOLD

To determine if a restricted or cracked charge air cooler or leaking manifold is causing lack of power, perform the following steps:

1. Test the charge air cooler; refer to section 21.3.
2. Visually inspect all joints for air leaks and all charge air cooler welded surfaces for stress cracks.
   [a] If charge air cooler leaks are present around the joints, replace the charge air cooler; refer to section 25.5.1.
   [b] If the intake manifold leaks, repair intake manifold; refer to section 25.5.2.
   [c] If neither charge air cooler nor intake manifold leaked, check the exhaust system; refer to section 25.6.

25.5.1 Charge Air Cooler Replacement

Perform the following steps to replace the charge air cooler:

1. Remove and replace the charge air cooler; refer to OEM guidelines.
2. If the intake manifold doesn't leak, verify replacement of the charge air cooler; refer to section 25.5.2.1.
3. If the intake manifold leaks, repair intake manifold; refer to section 25.5.2.

25.5.2 Air Intake Manifold Repair

Perform the following steps to repair the air intake manifold:

1. Remove the air intake manifold; refer to section 6.4.2.
2. Inspect the air intake manifold; refer to section 6.4.3.1.
3. Install the air intake manifold; refer to section 6.4.4.
4. Verify repair of the intake manifold; refer to section 25.5.2.1.

 Copyright © 2004 DETROIT DIESEL CORPORATION

25.5.2.1 Test the Engine with Replaced Charge Air Cooler and Air Intake Manifold

To determine if the repairs resolved the lack of power condition, perform the following steps:

CAUTION:

To avoid injury before starting and running the engine, ensure the vehicle is parked on a level surface, parking brake is set, and the wheels are blocked.

CAUTION:

Diesel engine exhaust and some of its constituents are known to the State of California to cause cancer, birth defects, and other reproductive harm.

- ☐ **Always start and operate an engine in a well ventilated area.**
- ☐ **If operating an engine in an enclosed area, vent the exhaust to the outside.**
- ☐ **Do not modify or tamper with the exhaust system or emission control system.**

1. Start and run the engine.
2. Test drive the vehicle to ensure lack of power has been resolved.
   [a] If no lack of power occurred during the test drive, no further troubleshooting is required. Shut down the engine.
   [b] If lack of power occurred during the test drive, shut down the engine. Check the exhaust system; refer to section 25.6.

(Rev. 2004) *All information subject to change without notice.*
6SE483 0401 Copyright © 2004 DETROIT DIESEL CORPORATION

25.6 FAULTY EXHAUST SYSTEM

To determine if a faulty exhaust system is causing lack of power, perform the following steps:

1. Test the exhaust system; refer to section 21.4.

CAUTION:

To avoid injury before starting and running the engine, ensure the vehicle is parked on a level surface, parking brake is set, and the wheels are blocked.

CAUTION:

Diesel engine exhaust and some of its constituents are known to the State of California to cause cancer, birth defects, and other reproductive harm.

- ☐ **Always start and operate an engine in a well ventilated area.**
- ☐ **If operating an engine in an enclosed area, vent the exhaust to the outside.**
- ☐ **Do not modify or tamper with the exhaust system or emission control system.**

2. Run the engine speed to full load.
   [a] If the exhaust back pressure at full load is less than 3.0 in.Hg (10.1 kPa), check for high inlet air temperature; refer to section 25.7.
   [b] If the exhaust back pressure at full load is 3.0 in.Hg (10.1 kPa) or greater, refer to section 25.6.1.

25.6.1 Engine Exhaust System Resolution

Perform the following steps to resolve the engine exhaust system:

1. Visually inspect the engine exhaust system; refer to OEM guidelines.
2. Repair or replace defective exhaust system components; refer to OEM guidelines.
3. Verify exhaust system resolution; refer to section 25.6.1.1.

 Copyright © 2004 DETROIT DIESEL CORPORATION

25.6.1.1 Test the Engine with Replaced Exhaust System

Perform the following steps to determine if replaced engine exhaust system components resolved lack of power condition:

1. Refer to section 25.6 for the exhaust caution before preceeding. Start and run the engine.
2. Test drive the vehicle to ensure lack of power has been resolved.
   [a] If no lack of power occurred during the test drive, no further troubleshooting is required. Shut down the engine.
   [b] If lack of power occurred during the test drive, shut down the engine. Check for high inlet air temperature; refer to section 25.7.

(Rev. 2004) *All information subject to change without notice.*
6SE483 0401 Copyright © 2004 DETROIT DIESEL CORPORATION

25.7 HIGH INLET AIR TEMPERATURE

To determine if high inlet air temperature is causing lack of power, perform the following steps:

1. Test the radiator fan, fan drive, or fan shroud for proper operation or configuration; refer to OEM guidelines.
   [a] If the radiator fan, fan drive, or fan shroud pass OEM test, check high altitude operation; refer to section 25.8.
   [b] If the radiator fan, drive or shroud did not operate correctly; refer to section 25.7.1.

25.7.1 Radiator Fan, Drive and Shroud Replacement

Perform the following steps to replace the radiator fan, drive and or shroud:

1. Remove and replace the radiator fan, drive and/or shroud; refer to OEM guidelines.
2. Verify replacement; refer to section 25.7.1.1.

 Copyright © 2004 DETROIT DIESEL CORPORATION

25.7.1.1 Test the Engine with Radiator Fan, Fan Drive, or Fan Shroud Replacement

Perform the following steps to determine if replaced radiator fan, fan drive, or fan shroud resolved lack of power condition:

CAUTION:

To avoid injury before starting and running the engine, ensure the vehicle is parked on a level surface, parking brake is set, and the wheels are blocked.

CAUTION:

Diesel engine exhaust and some of its constituents are known to the State of California to cause cancer, birth defects, and other reproductive harm.

- ☐ **Always start and operate an engine in a well ventilated area.**
- ☐ **If operating an engine in an enclosed area, vent the exhaust to the outside.**
- ☐ **Do not modify or tamper with the exhaust system or emission control system.**

1. Start and run the engine.
2. Test drive the vehicle to ensure lack of power has been resolved.
   [a] If no lack of power occurred during the test drive, no further troubleshooting is required. Shut down the engine.
   [b] If lack of power occurred during the test drive, shut down the engine. Check high altitude operation; refer to section 25.8.

(Rev. 2004) *All information subject to change without notice.*
6SE483 0401 Copyright © 2004 DETROIT DIESEL CORPORATION

25.8 HIGH ALTITUDE OPERATION

To determine if high altitude operation is causing lack of power, see Figure 25-3:

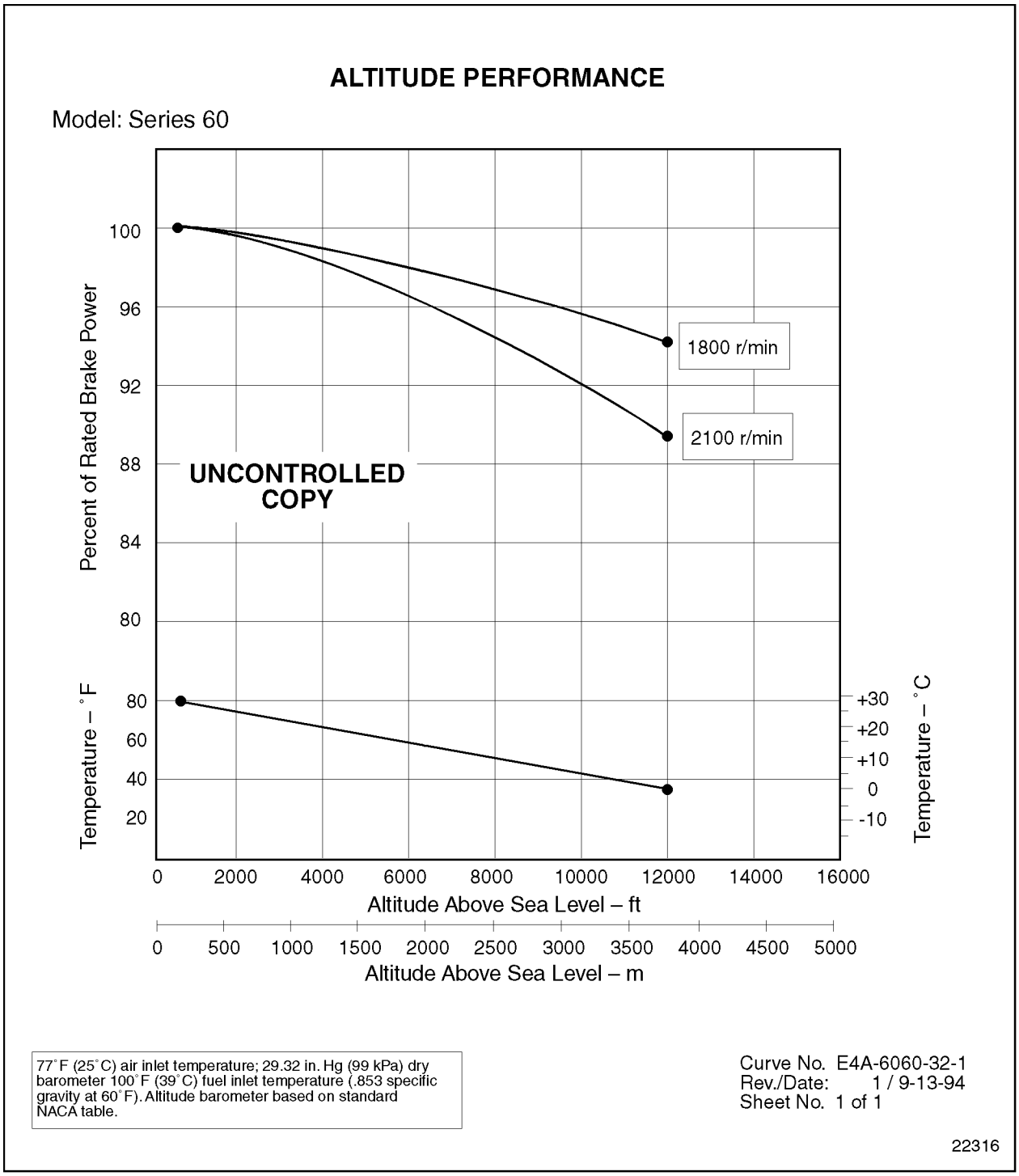

Figure 25-3 Altitude Performance Curves

1. Based on the altitude curve data, see Figure 25-3, decide if high altitude is causing the lack of power.
   [a] If your vehicle is operating above sea level, a loss of power will be encountered, no further troubleshooting is required.
   [b] If your vehicle is operating at or below sea level and there is a lack of power, refer to section 25.9.

(Rev. 2004) *All information subject to change without notice.*
6SE483 0401 Copyright © 2004 DETROIT DIESEL CORPORATION

25.9 INCORRECT CAMSHAFT TIMING

To determine if incorrect camshaft timing is causing lack of power, perform the following steps:

1. Check the camshaft timing; refer to section 1.24.6.1.
   [a] If the dial indicator reading is within 0.173 -0.215 in. (4.39 - 5.46 mm), no further troubleshooting is required.
   [b] If the dial indicator reading is not within 0.173 -0.215 in. (4.39 - 5.46 mm), check engine timing; refer to section 25.9.1.

25.9.1 Engine Timing Resolution

Perform the following steps to resolve incorrect engine timing:

1. Perform an engine gear train timing check; refer to section 1.22.2.1.
2. Verify engine timing resolution; refer to section 25.9.1.1.

 Copyright © 2004 DETROIT DIESEL CORPORATION

25.9.1.1 Test Engine with Correct Timing

Perform the following steps to determine if corrected engine timing resolved lack of power condition:

CAUTION:

To avoid injury before starting and running the engine, ensure the vehicle is parked on a level surface, parking brake is set, and the wheels are blocked.

CAUTION:

Diesel engine exhaust and some of its constituents are known to the State of California to cause cancer, birth defects, and other reproductive harm.

- ☐ **Always start and operate an engine in a well ventilated area.**
- ☐ **If operating an engine in an enclosed area, vent the exhaust to the outside.**
- ☐ **Do not modify or tamper with the exhaust system or emission control system.**

1. Start and run the engine.
2. Test drive the vehicle to ensure lack of power has been resolved.
   [a] If no lack of power occurred during the test drive, no further troubleshooting is required. Shut down the engine.
   [b] If lack of power occurred during the test drive, shut down the engine. Call the Detroit Diesel Technical Service.

(Rev. 2004) *All information subject to change without notice.*
6SE483 0401 Copyright © 2004 DETROIT DIESEL CORPORATION

26 LOW OIL PRESSURE

Section		Page
26.1	IMPROPER ENGINE OIL LEVEL	26-3
26.2	IMPROPER LUBRICATING OIL VISCOSITY	26-5
26.3	LUBRICATING OIL DILUTED WITH FUEL OIL OR ENGINE COOLANT	26-7
26.4	FAULTY OIL PRESSURE GAUGE SENSOR	26-9
26.5	OIL PRESSURE GAUGE LINE OBSTRUCTED	26-11
26.6	ROCKER ARM SHAFT PLUGS MISSING (NEW OR REBUILT ENGINES ONLY)	26-13
26.7	RESTRICTED OIL COOLER	26-15
26.8	NONFUNCTIONAL OR STICKING OIL PRESSURE REGULATOR VALVE	26-17
26.9	DEFECTIVE BYPASS VALVE	26-19
26.10	DEFECTIVE PRESSURE RELIEF VALVE	26-20
26.11	DEFECTIVE PICKUP SCREEN TUBE AND SCREEN ASSEMBLY	26-22
26.12	DEFECTIVE CRANKSHAFT MAIN BEARING SHELLS	26-24
26.13	DEFECTIVE OIL PUMP ASSEMBLY	26-26

(Rev. 2004) *All information subject to change without notice.*
6SE483 0401 Copyright © 2004 DETROIT DIESEL CORPORATION

26.1 IMPROPER ENGINE OIL LEVEL

To determine if improper engine oil level is causing low oil pressure, perform the following steps:

1. Ensure that the vehicle is parked on level ground.
2. Check the engine oil level; refer to section 13.13.1.
   [a] If the engine oil level is correct, check lubricating oil viscosity; refer to section 26.2.
   [b] If the engine oil level is incorrect, refer to section 26.1.1.

26.1.1 Low Engine Oil Level Resolution

Perform the following steps for low engine oil level:

1. Fill engine oil pan to correct level; refer to section 13.13.1.
2. Verify low engine oil resolution; refer to section 26.1.1.1.

 Copyright © 2004 DETROIT DIESEL CORPORATION

26.1.1.1 Test for Proper Engine Oil Level

Perform the following steps to determine if properly filled oil pan resolved low oil pressure:

1. Install the Diagnostic Data Reader to the vehicles Display Data Line Adaptor, see Figure 26-1; refer to OEM guidelines.

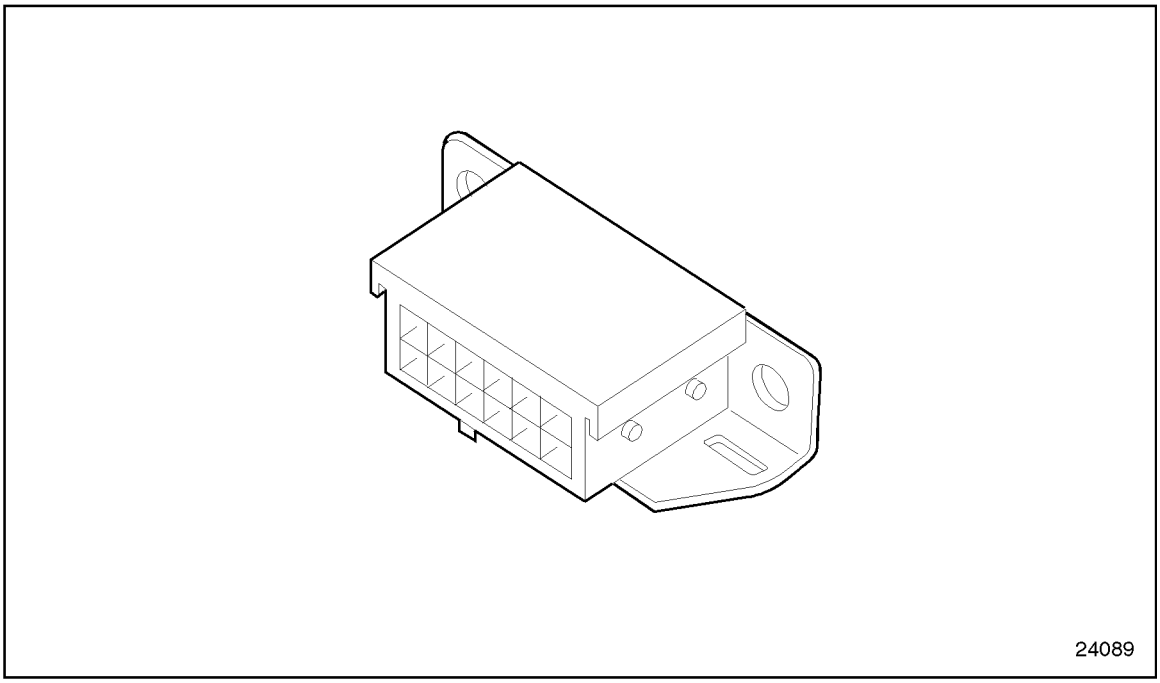

Figure 26-1 Typical Display Data Line Adaptor

CAUTION:

To avoid injury before starting and running the engine, ensure the vehicle is parked on a level surface, parking brake is set, and the wheels are blocked.

2. Start and vary engine speed between 1800 - 2100 r/min.
3. Visually examine the DDR for oil pressure reading.
   [a] If the DDR indicates oil pressure greater than or equal 241 kPa (35 lb/in.^{2}) at 1800 r/min, shut down the engine and disconnect the DDR. No further troubleshooting is required.
   [b] If the DDR indicates oil pressure less than 241 kPa (35 lb/in.^{2}), at 1800 r/min, shut down the engine and disconnect the DDR. Check lubricating oil viscosity; refer to section 26.2.

(Rev. 2004) *All information subject to change without notice.*
6SE483 0401 Copyright © 2004 DETROIT DIESEL CORPORATION

26.2 IMPROPER LUBRICATING OIL VISCOSITY

To determine if improper lubricating oil viscosity is causing low oil pressure, perform the following steps:

1. Acquire a lubricating oil sample from the engine oil pan.
2. Submit oil sample for an ASTM test analysis.
   [a] If engine oil sample meets ASTM specifications, check to determine if lubricating oil is diluted with fuel or coolant; refer to section 26.3.
   [b] If engine oil sample did not meet ASTM specifications, refer to section 26.2.1.

26.2.1 Lubricating Oil Replacement

Perform the following steps to replace engine oil:

1. Drain and refill engine with new lubricating oil; refer to section 13.13.1.
2. Verify lubricating oil replacement, refer to section 26.2.1.1.

 Copyright © 2004 DETROIT DIESEL CORPORATION

26.2.1.1 Test Engine with Replaced Lubricating Oil

Perform the following steps to determine if replaced lubricating oil resolved low oil pressure:

1. Install the Diagnostic Data Reader to the vehicles Display Data Line Adaptor, see Figure 26-1; refer to OEM guidelines.

CAUTION:

To avoid injury before starting and running the engine, ensure the vehicle is parked on a level surface, parking brake is set, and the wheels are blocked.

CAUTION:

Diesel engine exhaust and some of its constituents are known to the State of California to cause cancer, birth defects, and other reproductive harm.

- ☐ **Always start and operate an engine in a well ventilated area.**
- ☐ **If operating an engine in an enclosed area, vent the exhaust to the outside.**
- ☐ **Do not modify or tamper with the exhaust system or emission control system.**

2. Start and run engine speed at 1800 r/min.
3. Visually examine the DDR for oil pressure reading.
   [a] If the DDR indicates oil pressure greater than or equal 241 kPa (35 lb/in.^{2}) at 1800 r/min, shut down the engine and disconnect the DDR. No further troubleshooting is required.
   [b] If the DDR indicates oil pressure less than 241 kPa (35 lb/in.^{2}) at 1800 r/min, shut down the engine and disconnect the DDR. Check the lubricating oil for fuel and water dilution; refer to section 26.3.

(Rev. 2004) *All information subject to change without notice.*
6SE483 0401 Copyright © 2004 DETROIT DIESEL CORPORATION

26.3 LUBRICATING OIL DILUTED WITH FUEL OIL OR ENGINE COOLANT

To determine if lubricating oil is diluted with fuel oil or engine coolant is causing low oil pressure, perform the following steps:

1. Acquire a lubricating oil sample from the engine oil pan.
2. Visually examine lubricating oil sample for presence of engine coolant or fuel oil.
   [a] If coolant or fuel oil are not present, check for a faulty oil pressure gage, refer to section 26.4.
   [b] If water or fuel oil are present, refer to section 26.3.1.

26.3.1 Contaminated Lubricating Oil Resolution

Perform the following steps to resolve contaminated lubricating oil:

1. Drain engine oil pan, refer to section 13.13.1.
2. Refill engine crankcase with new oil; refer to section 13.13.1.
3. Verify lubricating oil replacement; refer to section 26.3.1.1.

 Copyright © 2004 DETROIT DIESEL CORPORATION

26.3.1.1 Test Replaced Lubricating Oil

Perform the following steps to determine if replaced lubricating oil resolved low oil pressure:

1. Install the Diagnostic Data Reader to the vehicles Display Data Line Adaptor, see Figure 26-1; refer to OEM guidelines.

CAUTION:

To avoid injury before starting and running the engine, ensure the vehicle is parked on a level surface, parking brake is set, and the wheels are blocked.

CAUTION:

Diesel engine exhaust and some of its constituents are known to the State of California to cause cancer, birth defects, and other reproductive harm.

- ☐ **Always start and operate an engine in a well ventilated area.**
- ☐ **If operating an engine in an enclosed area, vent the exhaust to the outside.**
- ☐ **Do not modify or tamper with the exhaust system or emission control system.**

2. Start and run the engine speed at 1800 r/min.
3. Visually examine the DDR for oil pressure reading.
   [a] If the DDR indicates oil pressure greater than or equal 241 kPa (35 lb/in.^{2}) at 1800 r/min, shut down the engine and disconnect the DDR. No further troubleshooting is required.
   [b] If the DDR indicates oil pressure less than 241 kPa (35 lb/in.^{2}) at 1800 r/min, shut down the engine and disconnect the DDR. Check for faulty oil pressure gage; refer to section 26.4.

(Rev. 2004) *All information subject to change without notice.*
6SE483 0401 Copyright © 2004 DETROIT DIESEL CORPORATION

26.4 FAULTY OIL PRESSURE GAUGE SENSOR

To determine if a faulty oil pressure gage sensor is causing low oil pressure, perform the following steps:

1. Install the Diagnostic Data Reader to the vehicles Display Data Line Adaptor, see Figure 26-1; refer to OEM guidelines.

CAUTION:

To avoid injury before starting and running the engine, ensure the vehicle is parked on a level surface, parking brake is set, and the wheels are blocked.

2. Start and vary the engine speed between 1800 - 2100 r/min.
3. Visually examine the DDR for oil pressure reading.
   [a] If the DDR indicates oil pressure greater than or equal 241 kPa (35 lb/in.^{2}) at 1800 r/min, shut down the engine and disconnect the DDR, check oil pressure gage sensor line for obstruction; refer to section 26.5.
   [b] If the DDR indicates oil pressure less than 241 kPa (35 lb/in.^{2}) at 1800 r/min, shut down the engine; refer to section 26.4.1.

26.4.1 Oil Pressure Gage Sensor Replacement

Perform the following steps to replace the oil pressure gage sensor:

1. Remove and replace the oil pressure gage sensor; refer to OEM guidelines.
2. Verify replaced oil pressure gage sensor; refer to section 26.4.1.1.

 Copyright © 2004 DETROIT DIESEL CORPORATION

26.4.1.1 Test the Engine with Replaced Oil Pressure Gage Sensor

Perform the following steps to determine if replaced oil pressure gage sensor resolved low oil pressure:

1. Install the Diagnostic Data Reader to the vehicles Display Data Line Adaptor, see Figure 26-1; refer to OEM guidelines.

CAUTION:

To avoid injury before starting and running the engine, ensure the vehicle is parked on a level surface, parking brake is set, and the wheels are blocked.

CAUTION:

Diesel engine exhaust and some of its constituents are known to the State of California to cause cancer, birth defects, and other reproductive harm.

- ☐ **Always start and operate an engine in a well ventilated area.**
- ☐ **If operating an engine in an enclosed area, vent the exhaust to the outside.**
- ☐ **Do not modify or tamper with the exhaust system or emission control system.**

2. Start and run engine speed at 1800 r/min.
3. Visually examine the DDR for oil pressure reading.
   [a] If the DDR indicates oil pressure greater than or equal 241 kPa (35 lb/in.^{2}) at 1800 r/min, shut down the engine and disconnect the DDR. No further troubleshooting is required.
   [b] If the DDR indicates oil pressure less than 241 kPa (35 lb/in.^{2}) at 1800 r/min, shut down the engine and disconnect the DDR. Check oil pressure gage sensor line for obstruction; refer to section 26.5.

(Rev. 2004) *All information subject to change without notice.*
6SE483 0401 Copyright © 2004 DETROIT DIESEL CORPORATION

26.5 OIL PRESSURE GAUGE LINE OBSTRUCTED

To determine if an oil pressure gage line obstruction is causing low oil pressure, perform the following steps:

1. Disconnect oil gage line from oil pressure gage; refer to OEM guidelines.
2. Visually inspect oil gage line for obstructions.
   [a] If no obstructions are found; check to determine if rocker arm shaft plugs are missing; refer to section 26.6.
   [b] If obstructions are found; refer to section 26.5.1.

26.5.1 Obstructed Oil Pressure Gage Line Repair

Perform the following steps to resolve oil pressure gage line obstructions:

1. Remove oil pressure gage line; refer to OEM guidelines.
2. Clean oil gage line by soaking in cleaning solution for 5 minutes.

CAUTION:

To avoid injury from flying debris when using compressed air, wear adequate eye protection (face shield or safety goggles) and do not exceed 40 psi (276 kPa) air pressure.

3. Blow out oil gage line of residue contamination with compressed air.
4. Install cleaned oil gage line; refer to OEM guidelines.
5. Verify oil gage line repair; refer to section 26.5.1.1.

 Copyright © 2004 DETROIT DIESEL CORPORATION

26.5.1.1 Test the Engine with Repaired Oil Gage Line

Perform the following steps to determine if replaced oil pressure gage resolved low oil pressure:

1. Install the Diagnostic Data Reader to the vehicles Display Data Line Adaptor, see Figure 26-1; refer to OEM guidelines.

CAUTION:

To avoid injury before starting and running the engine, ensure the vehicle is parked on a level surface, parking brake is set, and the wheels are blocked.

CAUTION:

Diesel engine exhaust and some of its constituents are known to the State of California to cause cancer, birth defects, and other reproductive harm.

- ☐ **Always start and operate an engine in a well ventilated area.**
- ☐ **If operating an engine in an enclosed area, vent the exhaust to the outside.**
- ☐ **Do not modify or tamper with the exhaust system or emission control system.**

2. Start and run engine speed at 1800 r/min.
3. Visually examine the DDR for oil pressure reading.
   [a] If the DDR indicates 241 kPa (35 lb/in.^{2}) at 1800 r/min, shut down the engine and disconnect the DDR. No further troubleshooting is required.
   [b] If the DDR indicates less than 241 kPa (35 lb/in.^{2}) at 1800 r/min, shut down the engine and disconnect the DDR. Check for missing or damaged rocker arm shaft plugs; refer to section 26.5.

(Rev. 2004) *All information subject to change without notice.*
6SE483 0401 Copyright © 2004 DETROIT DIESEL CORPORATION

26.6 ROCKER ARM SHAFT PLUGS MISSING (NEW OR REBUILT ENGINES ONLY)

If engine is not new or has not been rebuilt, refer to section 26.7.

To determine if a missing rocker arm shaft plugs are causing low oil pressure, perform the following steps:

1. Remove the rocker arm cover; for one-piece refer to section 1.6.2, for two-piece refer to section 1.6.3, for three-piece refer to section 1.6.5.
2. Visually inspect the rocker arm shaft for missing or leaking shaft plugs.
   [a] If the shaft plugs are present and are not leaking, check the oil cooler for restriction; refer to section 26.7.
   [b] If the shaft plugs are missing, refer to section 26.6.2.
   [c] If the shaft plugs are leaking, refer to section 26.6.1.

26.6.1 Leaking Rocker Arm Shaft Plug Repair

Perform the following steps to repair leaking rocker arm shaft plugs:

1. Remove damaged shaft plugs; refer to section 1.3.2.
2. Inspect rocker arm shaft for damage; refer to section 1.3.2.2. If damage is found, replace the rocker arm shaft; refer to section 1.3.2.2.
3. Install new shaft plugs; refer to section 1.3.3.

NOTE:
Shaft plug **must** be installed 1.0 - 1.3 mm (0.040 -0.050 in.) below surface using J 36236.

4. Install rocker arm cover; refer to section 1.6.7.
5. Verify repair made to the rocker shaft plugs; refer to section 26.6.2.1.

26.6.2 Missing Rocker Arm Shaft Plug Repair

Perform the following steps to repair missing rocker arm shaft plugs:

1. Inspect rocker arm shaft for damage; refer to section 1.3.2.2. If damage is found, replace the rocker arm shaft; refer to section 1.3.3.
2. Install new shaft plugs; refer to section 1.3.3.

NOTE:
Shaft plug **must** be installed 1.0 - 1.3 mm (0.040 -0.050 in.) below surface using J 36236.

3. Install rocker arm cover; refer to section 1.6.7.
4. Verify repair made to the rocker shaft plugs; refer to section 26.6.2.1.

 Copyright © 2004 DETROIT DIESEL CORPORATION

26.6.2.1 Test Engine with Repaired Rocker Shaft Plugs

Perform the following steps to determine if repaired rocker shaft plugs resolved low oil pressure:

1. Install the Diagnostic Data Reader to the vehicles Display Data Line Adaptor, see Figure 26-1; refer to OEM guidelines.

CAUTION:

To avoid injury before starting and running the engine, ensure the vehicle is parked on a level surface, parking brake is set, and the wheels are blocked.

CAUTION:

Diesel engine exhaust and some of its constituents are known to the State of California to cause cancer, birth defects, and other reproductive harm.

- ☐ **Always start and operate an engine in a well ventilated area.**
- ☐ **If operating an engine in an enclosed area, vent the exhaust to the outside.**
- ☐ **Do not modify or tamper with the exhaust system or emission control system.**

2. Start and run engine speed at 1800 r/min.
3. Visually examine the DDR for oil pressure reading.
   [a] If the DDR indicates 241 kPa (35 lb/in.^{2}) or more at 1800 r/min, shut down the engine and disconnect the DDR. No further troubleshooting is required.
   [b] If the DDR indicates less than 241 kPa (35 lb/in.^{2}) at 1800 r/min, shut down the engine and disconnect the DDR. Check the oil cooler for restriction; refer to section 26.7.

(Rev. 2004) *All information subject to change without notice.*
6SE483 0401 Copyright © 2004 DETROIT DIESEL CORPORATION

26.7 RESTRICTED OIL COOLER

To determine if a restricted oil cooler is causing low oil pressure, perform the following steps:

1. Install the Diagnostic Data Reader to the vehicles Display Data Line Adaptor, see Figure 26-1; refer to OEM guidelines.

CAUTION:

To avoid injury before starting and running the engine, ensure the vehicle is parked on a level surface, parking brake is set, and the wheels are blocked.

CAUTION:

Diesel engine exhaust and some of its constituents are known to the State of California to cause cancer, birth defects, and other reproductive harm.

- ☐ **Always start and operate an engine in a well ventilated area.**
- ☐ **If operating an engine in an enclosed area, vent the exhaust to the outside.**
- ☐ **Do not modify or tamper with the exhaust system or emission control system.**

2. Start and run the engine at 1800 r/min.
3. Run the engine at 1800 r/min with a no-load for approximately 5 minutes, allowing the engine coolant to reach normal operating range, 88 - 96°C (190 - 210°F).

   [a] If the DDR is indicating a lubricating oil temperature less than or equal to 110°C (230°F). Shut down the engine, disconnect the DDR, and check pressure regulator valve; refer to section 26.8.

   [b] If the DDR is indicating a lubricating oil temperature greater than 110°C (230°F). Shut down the engine and repair oil cooler; refer to section 26.7.1.

 Copyright © 2004 DETROIT DIESEL CORPORATION

26.7.1 Oil Cooler Repair

Perform the following steps to repair the oil cooler:

1. Remove and repair oil cooler, refer to section 3.8.2. Refer to section 3.9.2for pre-1991 oil coolers.
2. Clean the oil cooler; refer to section 3.8.3or refer to section 3.9.3 for pre-1991 oil coolers.
3. Inspect the oil cooler for damage; refer to section 3.8.3.1or refer to section 3.9.3.1for pre-1991 oil coolers.
4. Install repaired oil cooler; refer to section 3.8.4 or refer to section 3.9.4for pre-1991 oil coolers.
5. Verify repair of oil cooler; refer to section 26.7.1.1.

26.7.1.1 Test Engine with Repaired Oil Cooler

Perform the following steps to determine if oil cooler repair resolved low oil pressure:

1. Install the Diagnostic Data Reader to the vehicles Display Data Line Adaptor, see Figure 26-1; refer to OEM guidelines.
2. Refer to section 26.7 for the exhaust caution before preceeding. Start and run the engine at 1800 r/min.
3. Run the engine through its operating range with no-load for approximately 5 minutes, allowing the engine coolant to reach normal operating range, 88 - 96°C (190 - 210°F).
   [a] If the DDR is indicating a lubricating oil temperature less than or equal to 110°C (230°F) at 1800 r/min, disconnect the DDR and shut down the engine. No further troubleshooting is required.
   [b] If the DDR is indicating a lubricating oil temperature greater than 110°C (230°F) at 1800 r/min, shut down the engine and disconnect the DDR. Check pressure regulator valve; refer to section 26.8.

(Rev. 2004) *All information subject to change without notice.*
6SE483 0401 Copyright © 2004 DETROIT DIESEL CORPORATION

26.8 NONFUNCTIONAL OR STICKING OIL PRESSURE REGULATOR VALVE

To determine if a nonfunctional or sticking regulator valve is causing low oil pressure, perform the following steps:

1. Remove the oil pressure regulator; refer to section 3.3.2.
2. Inspect the oil pressure regulator; refer to section 3.3.3.1.
   [a] If the regulator valve moves freely in the valve body; see Figure 26-2. Reinstall the oil pressure regulator assembly, refer to section 3.3.5. Check the bypass valve, refer to section 26.9.
   [b] If the regulator valve will not move freely in the valve body, refer to section 26.8.1.

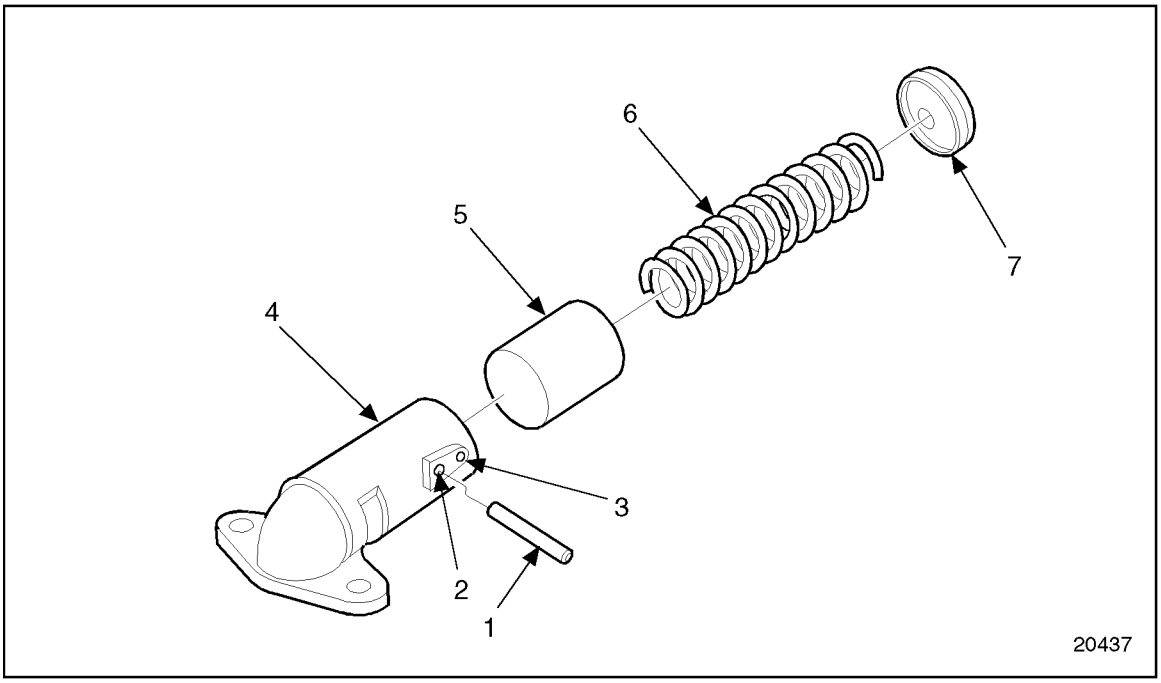

1. Pin
2. Pressure Relief Valve Pin Location
3. Pressure Regulator Pin Location
4. Valve Body
5. Valve
6. Spring
7. Spring Seat

Figure 26-2 Oil Pressure Regulator

 Copyright © 2004 DETROIT DIESEL CORPORATION

26.8.1 Oil Pressure Regulator Valve Repair

Perform the following steps to repair the oil pressure regulator valve:

1. Disassemble the pressure regulator valve and replace damaged components; refer to section 3.3.3.
2. Assemble the pressure regulator valve; refer to section 3.3.4.
3. Verify repair of the regulator valve; refer to section 26.8.1.1.

26.8.1.1 Test Engine with Repaired Oil Pressure Regulator Valve

Perform the following steps to determine if repaired oil pressure regulator valve resolved low oil pressure:

1. Install the Diagnostic Data Reader to the vehicles Display Data Line Adaptor, see Figure 26-1; refer to OEM guidelines.

CAUTION:

To avoid injury before starting and running the engine, ensure the vehicle is parked on a level surface, parking brake is set, and the wheels are blocked.

CAUTION:

Diesel engine exhaust and some of its constituents are known to the State of California to cause cancer, birth defects, and other reproductive harm.

- ☐ **Always start and operate an engine in a well ventilated area.**
- ☐ **If operating an engine in an enclosed area, vent the exhaust to the outside.**
- ☐ **Do not modify or tamper with the exhaust system or emission control system.**

2. Start and run engine speed at 1800 r/min.
3. Visually examine the DDR for oil pressure reading.
   [a] If the DDR indicates 241 kPa (35 lb/in.^{2}) or more at 1800 r/min, shut down the engine and disconnect the DDR. No further troubleshooting is required.
   [b] If the DDR indicates less than 241 kPa (35 lb/in.^{2}) at 1800 r/min, shut down the engine and disconnect the DDR; check bypass valve; refer to section 26.9.

(Rev. 2004) *All information subject to change without notice.*
6SE483 0401 Copyright © 2004 DETROIT DIESEL CORPORATION

26.9 DEFECTIVE BYPASS VALVE

To determine if a defective bypass valve is causing low oil pressure, perform the following steps:

1. Remove the oil filter adaptor; refer to section 3.6.2.
2. Inspect the oil filter adaptor; refer to section 3.6.3.1.
   [a] If no damage is found with the oil filter adaptor components, reinstall the oil filter adaptor; refer to section 3.6.5. Check pressure relief valve, refer to section 26.10.
   [b] If damage is found with the oil filter adaptor components; refer to section 26.9.1.

26.9.1 Oil Filter Adaptor Repair

Perform the following steps to repair the oil filter adaptor:

1. Disassemble the oil filter adaptor; refer to section 3.6.2.
2. Assemble the oil filter adaptor; refer to section 3.6.4.

NOTE:
Always replace the copper washer whenever the adaptor plug is removed.

3. Install repaired oil filter adaptor; refer to section 3.6.5.
4. Verify repairs made to the oil filter adaptor; refer to section 26.9.1.1.

26.9.1.1 Test Engine with Repaired Oil Filter Adaptor

Perform the following steps to determine if repaired oil pressure regulator valve resolved low oil pressure:

1. Install the Diagnostic Data Reader to the vehicles Display Data Line Adaptor, see Figure 26-1; refer to OEM guidelines.

CAUTION:

To avoid injury before starting and running the engine, ensure the vehicle is parked on a level surface, parking brake is set, and the wheels are blocked.

2. Start and vary the engine speed between 1800 -2100 r/min.
3. Visually examine the DDR for oil pressure reading.
   [a] If the DDR indicates 241 kPa (35 lb/in.^{2}), shut down the engine and disconnect the DDR. No further troubleshooting is required.
   [b] If the DDR indicates less than 241 kPa (35 lb/in.^{2}), shut down the engine and disconnect the DDR, check pressure relief valve; refer to section 26.10.

 Copyright © 2004 DETROIT DIESEL CORPORATION

26.10 DEFECTIVE PRESSURE RELIEF VALVE

To determine if a defective pressure relief valve is causing low oil pressure, perform the following steps:

1. Remove the pressure relief valve; refer to section 3.4.2.
2. Inspect the oil pressure relief valve; refer to section 3.4.4.1.
   [a] If the relief valve moves freely in the valve body, reinstall the oil pressure relief valve; refer to section 3.4.6. Check the pickup tube and screen assembly for defects, refer to section 26.11.
   [b] If the relief valve will not move freely in the valve body, refer to section 26.10.1.

26.10.1 Pressure Relief Valve Repair

Perform the following steps to repair the pressure relief valve:

1. Disassemble the pressure relief valve and replace damaged components; refer to section 3.4.3.
2. Assemble and install the pressure regulator valve; refer to section 3.3.4.
3. Verify repair of the regulator valve; refer to section 26.10.1.1.

(Rev. 2004) *All information subject to change without notice.*
6SE483 0401 Copyright © 2004 DETROIT DIESEL CORPORATION

26.10.1.1 Test Engine with Repaired Relief Valve

Perform the following steps to determine if repaired relief valve resolved low oil pressure:

1. Install the Diagnostic Data Reader to the vehicles Display Data Line Adaptor, see Figure 26-1; refer to OEM guidelines.

CAUTION:

To avoid injury before starting and running the engine, ensure the vehicle is parked on a level surface, parking brake is set, and the wheels are blocked.

CAUTION:

Diesel engine exhaust and some of its constituents are known to the State of California to cause cancer, birth defects, and other reproductive harm.

- ☐ **Always start and operate an engine in a well ventilated area.**
- ☐ **If operating an engine in an enclosed area, vent the exhaust to the outside.**
- ☐ **Do not modify or tamper with the exhaust system or emission control system.**

2. Start and run engine speed at 1800 r/min.
3. Visually examine the DDR for oil pressure reading.
   [a] If the DDR indicates 241 kPa (35 lb/in.^{2}), or more at 1800 r/min, shut down the engine and disconnect the DDR. No further troubleshooting is required.
   [b] If the DDR indicates less than 241 kPa (35 lb/in.^{2}), at 1800 r/min, shut down the engine and disconnect the DDR, check pickup tube and screen assembly; refer to section 26.11.

 Copyright © 2004 DETROIT DIESEL CORPORATION

26.11 DEFECTIVE PICKUP SCREEN TUBE AND SCREEN ASSEMBLY

To determine if a defective pickup screen tube or screen assembly is causing low oil pressure, perform the following steps:

1. Remove pickup screen tube and screen assembly; refer to section 3.2.2.
2. Visually inspect pickup screen tube and screen assembly; refer to section 3.2.3.1.
   [a] If no stress cracks, twisted screen tube, or cracked flange gaskets are found, check crankshaft main bearings; refer to section 26.12.
   [b] If stress cracks, twisted screen tube, or cracked flange gaskets are found, refer to section 26.11.1.

26.11.1 Pickup Screen Tube and Screen Assembly Repair

Perform the following steps to repair the pickup screen tube and screen assembly:

1. Replace all damaged components identified during inspection and install; refer to section 3.2.6.
2. Verify repairs to pickup screen tube and screen assembly; refer to section 26.11.1.1.

(Rev. 2004) *All information subject to change without notice.*
6SE483 0401 Copyright © 2004 DETROIT DIESEL CORPORATION

26.11.1.1 Test Engine with Repaired Pickup Screen Tube and Screen Assembly

Perform the following steps to determine if repaired relief valve resolved low oil pressure:

1. Install the Diagnostic Data Reader to the vehicles Display Data Line Adaptor, see Figure 26-1; refer to OEM guidelines.

CAUTION:

To avoid injury before starting and running the engine, ensure the vehicle is parked on a level surface, parking brake is set, and the wheels are blocked.

CAUTION:

Diesel engine exhaust and some of its constituents are known to the State of California to cause cancer, birth defects, and other reproductive harm.

- ☐ **Always start and operate an engine in a well ventilated area.**
- ☐ **If operating an engine in an enclosed area, vent the exhaust to the outside.**
- ☐ **Do not modify or tamper with the exhaust system or emission control system.**

2. Start and run engine speed at 1800 r/min.
3. Visually examine the DDR for oil pressure reading.
   [a] If the DDR indicates 241 kPa (35 lb/in.^{2}), or more at 1800 r/min, shut down the engine and disconnect the DDR. No further troubleshooting is required.
   [b] If the DDR indicates less than 241 kPa (35 lb/in.^{2}) at 1800 r/min, shut down the engine and disconnect the DDR, check crankshaft main bearings; refer to section 26.12.

 Copyright © 2004 DETROIT DIESEL CORPORATION

26.12 DEFECTIVE CRANKSHAFT MAIN BEARING SHELLS

To determine if defective crankshaft main bearing shells are causing low oil pressure, perform the following steps:

1. Check main bearing to crankshaft journal clearances; refer to section 1.7.2.1.
   [a] If main bearing shell-to-journal clearance is within 0.040 - 0.151 mm (0.0016 -0.006 in.), check oil pump assembly; refer to section 26.13.
   [b] If main bearing shell-to-journal clearance is not within 0.040 - 0.151 mm 0(.0016 -0.006 in.), refer to section 26.12.1.

26.12.1 Crankshaft Main Bearing Shell Repair

Perform the following steps to repair crankshaft main bearing shells:

1. Remove and replace defective crankshaft main bearing shells; refer to section 1.9.2.
2. Verify crankshaft main bearing shells repair: refer to section 26.12.1.1.

(Rev. 2004) *All information subject to change without notice.*
6SE483 0401 Copyright © 2004 DETROIT DIESEL CORPORATION

26.12.1.1 Test Engine with New Crankshaft Main Bearing Shells

Perform the following steps to determine if repaired relief valve resolved low oil pressure:

1. Install the Diagnostic Data Reader to the vehicles Display Data Line Adaptor, see Figure 26-1; refer to OEM guidelines.

CAUTION:

To avoid injury before starting and running the engine, ensure the vehicle is parked on a level surface, parking brake is set, and the wheels are blocked.

CAUTION:

Diesel engine exhaust and some of its constituents are known to the State of California to cause cancer, birth defects, and other reproductive harm.

- ☐ **Always start and operate an engine in a well ventilated area.**
- ☐ **If operating an engine in an enclosed area, vent the exhaust to the outside.**
- ☐ **Do not modify or tamper with the exhaust system or emission control system.**

2. Start and run engine between 1800 r/min.
3. Visually examine the DDR for oil pressure reading.
   [a] If the DDR indicates 241 kPa (35 lb/in.^{2}), at 1800 r/min, shut down the engine and disconnect the DDR. No further troubleshooting is required.
   [b] If the DDR indicates less than 241 kPa (35 lb/in.^{2}) at 1800 r/min, shut down the engine and disconnect the DDR. Check the oil pump assembly; refer to section 26.12.

 Copyright © 2004 DETROIT DIESEL CORPORATION

26.13 DEFECTIVE OIL PUMP ASSEMBLY

To determine if a defective oil pump is causing low oil pressure, perform the following steps:

1. Remove the oil pump assembly; refer to section 3.2.2.
2. Manually rotate the oil pump drive gear.
   [a] If the drive gear rotates freely in the pump housing, call Detroit Diesel Technical Service Group.
   [b] If the drive gear did not rotate freely; refer to section 26.13.1.

26.13.1 Oil Pump Assembly Repair

Perform the following steps to repair the oil pump assembly:

1. Disassemble the oil pump assembly and replace worn or damaged components as required; refer to section 3.2.3.
2. Reassemble the oil pump; refer to section 3.2.4 or refer to section 3.2.5for pre-1991 oil pump.
3. Verify oil pump repair; refer to section 26.13.1.1.

(Rev. 2004) *All information subject to change without notice.*
6SE483 0401 Copyright © 2004 DETROIT DIESEL CORPORATION

26.13.1.1 Test Engine with Repaired Oil Pump Assembly

Perform the following steps to determine if repaired relief valve resolved low oil pressure:

CAUTION:

To avoid injury before starting and running the engine, ensure the vehicle is parked on a level surface, parking brake is set, and the wheels are blocked.

1. Install the Diagnostic Data Reader to the vehicles Display Data Line Adaptor, see Figure 26-1; refer to OEM guidelines.

CAUTION:

Diesel engine exhaust and some of its constituents are known to the State of California to cause cancer, birth defects, and other reproductive harm.

- ☐ **Always start and operate an engine in a well ventilated area.**
- ☐ **If operating an engine in an enclosed area, vent the exhaust to the outside.**
- ☐ **Do not modify or tamper with the exhaust system or emission control system.**

2. Start and run the engine speed at 1800 r/min.
3. Visually examine the DDR for oil pressure reading.
   [a] If the DDR indicates 241 kPa (35 lb/in.^{2}) at 1800 r/min, shut down the engine and disconnect the DDR. No further troubleshooting is required.
   [b] If the DDR indicates less than 241 kPa (35 lb/in.^{2}) at 1800 r/min, shut down the engine and disconnect the DDR; call Detroit Diesel Technical Service Group.

 Copyright © 2004 DETROIT DIESEL CORPORATION

(Rev. 2004) *All information subject to change without notice.*
6SE483 0401 Copyright © 2004 DETROIT DIESEL CORPORATION

27 HIGH ENGINE COOLANT TEMPERATURE

Section **Page**

27.1 IMPROPER ENGINE COOLANT LEVEL 27-3
27.2 INSUFFICIENT RADIATOR AIR CIRCULATION 27-5
27.3 FAULTY PRESSURE CONTROL CAP 27-7
27.4 DEFECTIVE COOLANT HOSES 27-9
27.5 FAN BELTS ARE INCORRECTLY ADJUSTED 27-11
27.6 INOPERATIVE THERMO-MODULATED FAN 27-13
27.7 FAULTY THERMOSTATS 27-15
27.8 FAULTY WATER PUMP 27-17
27.9 COMBUSTION GASES IN COOLANT 27-19
27.10 ABNORMAL RADIATOR COOLANT FLOW 27-21

 Copyright © 2004 DETROIT DIESEL CORPORATION

27.1 IMPROPER ENGINE COOLANT LEVEL

To determine if improper engine coolant level is causing high engine coolant temperature, perform the following:

1. Visually inspect the radiator coolant level; refer to OEM guidelines.
   [a] If the radiator coolant level is within 2.0 in. (approximately 50 mm) of the radiator filler neck, check insufficient radiator air circulation; refer to section 27.2.
   [b] If the radiator coolant level is not within 2 in. (approximately 50 mm) of the radiator filler neck, refer to section 27.1.1.

27.1.1 Improper Coolant Level Resolution

Perform the following steps to resolve improper coolant level:

1. Fill coolant system to correct level; refer to section 13.13.4.
2. Verify coolant level resolution; refer to section 27.1.1.1.

 Copyright © 2004 DETROIT DIESEL CORPORATION

27.1.1.1 Test Engine with Proper Coolant Level

Perform the following to determine if proper coolant level resolved high engine coolant temperature:

CAUTION:

To avoid injury before starting and running the engine, ensure the vehicle is parked on a level surface, parking brake is set, and the wheels are blocked.

CAUTION:

Diesel engine exhaust and some of its constituents are known to the State of California to cause cancer, birth defects, and other reproductive harm.

- ☐ **Always start and operate an engine in a well ventilated area.**
- ☐ **If operating an engine in an enclosed area, vent the exhaust to the outside.**
- ☐ **Do not modify or tamper with the exhaust system or emission control system.**

1. Start and run the engine.
2. Run the engine through its operating range with no-load for approximately 5 minutes, allowing the engine coolant to reach normal operating range.
   [a] If the engine coolant temperature is 88-96°C (190-210°F), no further troubleshooting is required. Shut down the engine.
   [b] If the engine coolant temperature is not 88-96°C (190-210°F), shut down the engine. Check for insufficient radiator air circulation; refer to section 27.2.

(Rev. 2004) *All information subject to change without notice.*
6SE483 0401 Copyright © 2004 DETROIT DIESEL CORPORATION

27.2 INSUFFICIENT RADIATOR AIR CIRCULATION

To determine if insufficient radiator air circulation is causing high engine coolant temperature, perform the following:

1. Visually examine the radiator and radiator shrouding.
   - [a] If the radiator is absent of clogging, debris, and dirt, check the pressure control cap; refer to section 27.3.
   - [b] If the radiator has excessive clogging, debris, or dirt; refer to section 27.2.1.
   - [c] If the radiator shrouding is not damaged, incorrectly positioned, or inadequate, check the pressure control cap; refer to section 27.3.
   - [d] If the radiator shrouding is damaged, incorrectly positioned, or inadequate, refer to section 27.2.2.

27.2.1 Exterior Radiator Repair

Perform the following for exterior radiator repair:

1. Clean the exterior radiator of all clogging, debris, or excessive dirt; refer to OEM guidelines.
2. Verify exterior radiator repair; refer to section 27.2.2.1.

27.2.2 Radiator Shroud Repair

Perform the following for radiator shroud repair:

1. Repair or replace damaged radiator shrouding; refer to OEM guidelines
2. Verify exterior radiator repair; refer to section 27.2.2.1.

 Copyright © 2004 DETROIT DIESEL CORPORATION

27.2.2.1 Test Engine with Repaired Exterior Radiator and Shrouding

Perform the following to determine if exterior radiator and shrouding repair resolved high engine coolant temperature:

CAUTION:

To avoid injury before starting and running the engine, ensure the vehicle is parked on a level surface, parking brake is set, and the wheels are blocked.

CAUTION:

Diesel engine exhaust and some of its constituents are known to the State of California to cause cancer, birth defects, and other reproductive harm.

- **Always start and operate an engine in a well ventilated area.**
- **If operating an engine in an enclosed area, vent the exhaust to the outside.**
- **Do not modify or tamper with the exhaust system or emission control system.**

1. Start and run the engine.
2. Run the engine through its operating range with no-load for approximately 5 minutes, allowing the engine coolant to reach normal operating range.
   [a] If the engine coolant temperature is 88-96°C (190-210°F), no further troubleshooting is required. Shut down the engine.
   [b] If the engine coolant temperature is not 88-96°C (190-210°F), shut down the engine. Check the pressure control cap; refer to section 27.3.

(Rev. 2004) *All information subject to change without notice.*
6SE483 0401 Copyright © 2004 DETROIT DIESEL CORPORATION

27.3 FAULTY PRESSURE CONTROL CAP

To determine if a faulty pressure control cap is causing high engine coolant temperature, perform the following:

1. Perform coolant pressure control cap tests; refer to section 4.6.2.1.
   [a] If the cooling system pressure is less than or equal to 48.3 kPa (7 lb/in.^{2}), check the coolant hoses; refer to section 27.4.
   [b] If the cooling system pressure is greater than 48.3 kPa (7 lb/in.^{2}), refer to section 27.3.1.

27.3.1 Pressure Control Cap Resolution

Perform the following steps to resolve faulty pressure control cap:

1. Remove and replace pressure control cap; refer to OEM guidelines.
2. Install a new pressure control cap; refer to OEM guidelines.
3. Verify pressure control repair; refer to section 27.3.1.1.

 Copyright © 2004 DETROIT DIESEL CORPORATION

27.3.1.1 Test Engine with Replaced Pressure Control Cap

Perform the following to determine if exterior radiator repair resolved high engine coolant temperature:

CAUTION:

To avoid injury before starting and running the engine, ensure the vehicle is parked on a level surface, parking brake is set, and the wheels are blocked.

CAUTION:

Diesel engine exhaust and some of its constituents are known to the State of California to cause cancer, birth defects, and other reproductive harm.

- ☐ **Always start and operate an engine in a well ventilated area.**
- ☐ **If operating an engine in an enclosed area, vent the exhaust to the outside.**
- ☐ **Do not modify or tamper with the exhaust system or emission control system.**

1. Start and run the engine.
2. Run the engine through its operating range with no-load for approximately 5 minutes, allowing the engine coolant to reach normal operating range.
   [a] If the engine coolant temperature is normal, no further troubleshooting is required. Shut down the engine.
   [b] If the engine coolant temperature is not normal, shut down the engine. Check coolant hoses; refer to section 27.4.

(Rev. 2004) *All information subject to change without notice.*
6SE483 0401 Copyright © 2004 DETROIT DIESEL CORPORATION

27.4 DEFECTIVE COOLANT HOSES

To determine if defective coolant hoses is causing high engine coolant temperature, perform the following:

1. Visually examine cooling system hoses; refer to OEM guidelines.
   [a] If cooling system hoses are not soft, deteriorated, or collapsed, check the fan belts; refer to section 27.5.
   [b] If cooling system hoses are soft, deteriorated, or collapsed, refer to section 27.4.1.

27.4.1 Coolant System Hoses Replacement

Perform the following steps to resolve worn or damaged coolant system hoses:

1. Remove and replace damaged or worn coolant hoses as necessary; refer to OEM guidelines.
2. Install new coolant hoses as necessary; refer to OEM guidelines.
3. Verify replaced coolant system hoses; refer to section 27.4.1.1.

 Copyright © 2004 DETROIT DIESEL CORPORATION

27.4.1.1 Test Engine with Replaced Coolant Hoses

Perform the following to determine if the new coolant hoses resolved high engine coolant temperature:

CAUTION:

To avoid injury before starting and running the engine, ensure the vehicle is parked on a level surface, parking brake is set, and the wheels are blocked.

CAUTION:

Diesel engine exhaust and some of its constituents are known to the State of California to cause cancer, birth defects, and other reproductive harm.

- ☐ **Always start and operate an engine in a well ventilated area.**
- ☐ **If operating an engine in an enclosed area, vent the exhaust to the outside.**
- ☐ **Do not modify or tamper with the exhaust system or emission control system.**

1. Start and run the engine.
2. Run the engine through its operating range with no-load for approximately 5 minutes, allowing the engine coolant to reach normal operating range, and visually examine replaced hoses for any leaks.

   [a] If the engine coolant temperature is 88-96°C (190-210°F) and no leaks are found, no further troubleshooting is required.

   [b] If the engine coolant temperature is 88-96°C (190-210°F) and leaks are found, repair leaks; refer to section 27.4.1. Shut down the engine.

   [c] If the engine coolant temperature is not 88-96°C (190-210°F) and no leaks are found, shut down the engine. Check fan belts; refer to section 27.5.

(Rev. 2004) *All information subject to change without notice.*
6SE483 0401 Copyright © 2004 DETROIT DIESEL CORPORATION

27.5 FAN BELTS ARE INCORRECTLY ADJUSTED

To determine if misadjusted fan belts are causing high engine coolant temperature, perform the following:

1. Test fan belt(s) tension; refer to section 13.13.10.
2. Compare tension to belt specifications listed in Table 27-1.
   [a] If the belt(s) tension is within specification, check the thermo-modulated fan; refer to section 27.6.
   [b] If the belt(s) tension is not within specification,refer to section 27.5.1.

Single Belt, lb (N)	2 or 3 Belts, lb (N)
80 - 100 (335 - 345)	60 - 80 (266 - 355)

Table 27-1 Fan Belt Tension

27.5.1 Belt Tension Resolution

Perform the following steps to resolve incorrect belt tension:

1. Readjust belt(s) tension as necessary; refer to section 13.13.10.
2. Verify belt tension resolution; refer to section 27.5.1.1.

 Copyright © 2004 DETROIT DIESEL CORPORATION

27.5.1.1 Test Engine with Correct Belt Tension

Perform the following to determine if exterior radiator repair resolved high engine coolant temperature:

CAUTION:

To avoid injury before starting and running the engine, ensure the vehicle is parked on a level surface, parking brake is set, and the wheels are blocked.

CAUTION:

Diesel engine exhaust and some of its constituents are known to the State of California to cause cancer, birth defects, and other reproductive harm.

- ☐ **Always start and operate an engine in a well ventilated area.**
- ☐ **If operating an engine in an enclosed area, vent the exhaust to the outside.**
- ☐ **Do not modify or tamper with the exhaust system or emission control system.**

1. Start and run the engine.
2. Run the engine through its operating range with no-load for approximately 5 minutes, allowing the engine coolant to reach normal operating range.
   [a] If the engine coolant temperature is 88-96°C (190-210°F), no further troubleshooting is required. Shut down the engine.
   [b] If the engine coolant temperature is not 88-96°C (190-210°F), shut down the engine. Check thermo-modulated fan; refer to section 27.6.

(Rev. 2004) *All information subject to change without notice.*
6SE483 0401 Copyright © 2004 DETROIT DIESEL CORPORATION

27.6 INOPERATIVE THERMO-MODULATED FAN

To determine if an inoperative thermo-modulated fan is causing high engine coolant temperature, perform the following:

1. Test the thermo-modulated fan; refer to OEM guidelines.
   [a] If the thermo-modulated fan is functioning correctly, check thermostats; refer to section 27.7.
   [b] If the thermo-modulated fan is not functioning correctly, refer to section 27.6.1.

27.6.1 Thermo-modulated Fan Replacement

Perform the following steps to replace inoperative thermo-modulated fan:

1. Replace inoperative thermo-modulated fan; refer to OEM guidelines.
2. Verify thermo-modulated fan replacement; refer to section 27.6.1.1.

 Copyright © 2004 DETROIT DIESEL CORPORATION

27.6.1.1 Test Engine with Replaced Thermo-modulated Fan

Perform the following to determine if thermo-modulated fan replacement resolved high engine coolant temperature:

CAUTION:

To avoid injury before starting and running the engine, ensure the vehicle is parked on a level surface, parking brake is set, and the wheels are blocked.

CAUTION:

Diesel engine exhaust and some of its constituents are known to the State of California to cause cancer, birth defects, and other reproductive harm.

- ☐ **Always start and operate an engine in a well ventilated area.**
- ☐ **If operating an engine in an enclosed area, vent the exhaust to the outside.**
- ☐ **Do not modify or tamper with the exhaust system or emission control system.**

1. Start and run the engine.
2. Run the engine through its operating range with no-load for approximately 5 minutes, allowing the engine coolant to reach normal operating range.
   [a] If the engine coolant temperature is 88-96°C (190-210°F), no further troubleshooting is required. Shut down the engine.
   [b] If the engine coolant temperature is not 88-96°C (190-210°F), shut down the engine. Check thermostats; refer to section 27.7.

(Rev. 2004) *All information subject to change without notice.*
6SE483 0401 Copyright © 2004 DETROIT DIESEL CORPORATION

27.7 FAULTY THERMOSTATS

To determine if faulty thermostats are causing high engine coolant temperature, perform the following:

1. Remove thermostat from the thermostat housing; refer to section 4.5.2.
2. Inspect thermostat for correct operation; refer to section 4.5.2.1.
   [a] If thermostat opened at 97°C (207°F), check water pump; refer to section 27.8.
   [b] If thermostat did not open at 97°C (207°F), refer to section 27.7.1.

27.7.1 Thermostat Replacement

Perform the following steps to replace thermostats:

1. Install new thermostat; refer to section 4.5.5.
2. Verify replaced thermostat; refer to section 27.7.1.1.

 Copyright © 2004 DETROIT DIESEL CORPORATION

27.7.1.1 Test Engine with New Thermostat

Perform the following to determine if thermostat replacement resolved high engine coolant temperature:

CAUTION:

To avoid injury before starting and running the engine, ensure the vehicle is parked on a level surface, parking brake is set, and the wheels are blocked.

CAUTION:

Diesel engine exhaust and some of its constituents are known to the State of California to cause cancer, birth defects, and other reproductive harm.

- ☐ **Always start and operate an engine in a well ventilated area.**
- ☐ **If operating an engine in an enclosed area, vent the exhaust to the outside.**
- ☐ **Do not modify or tamper with the exhaust system or emission control system.**

1. Start and run the engine.
2. Run the engine through its operating range with no-load for approximately 5 minutes, allowing the engine coolant to reach normal operating range.
   [a] If the engine coolant temperature is 88-96°C (190-210°F), no further troubleshooting is required. Shut down the engine.
   [b] If the engine coolant temperature is not 88-96°C (190-210°F), shut down the engine. Check water pump; refer to section 27.8.

(Rev. 2004) *All information subject to change without notice.*
6SE483 0401 Copyright © 2004 DETROIT DIESEL CORPORATION

27.8 FAULTY WATER PUMP

To determine if a faulty water pump is causing high engine coolant temperature, perform the following:

1. Remove the water pump; refer to section 4.2.2 (gear case mounted) or refer to section 4.3.2 (gear case cover mounted).
2. Turn the water pump over and install J 35687, water pump impeller slip and lash tester, into the tapped holes provided in the impeller; see Figure 27-1.

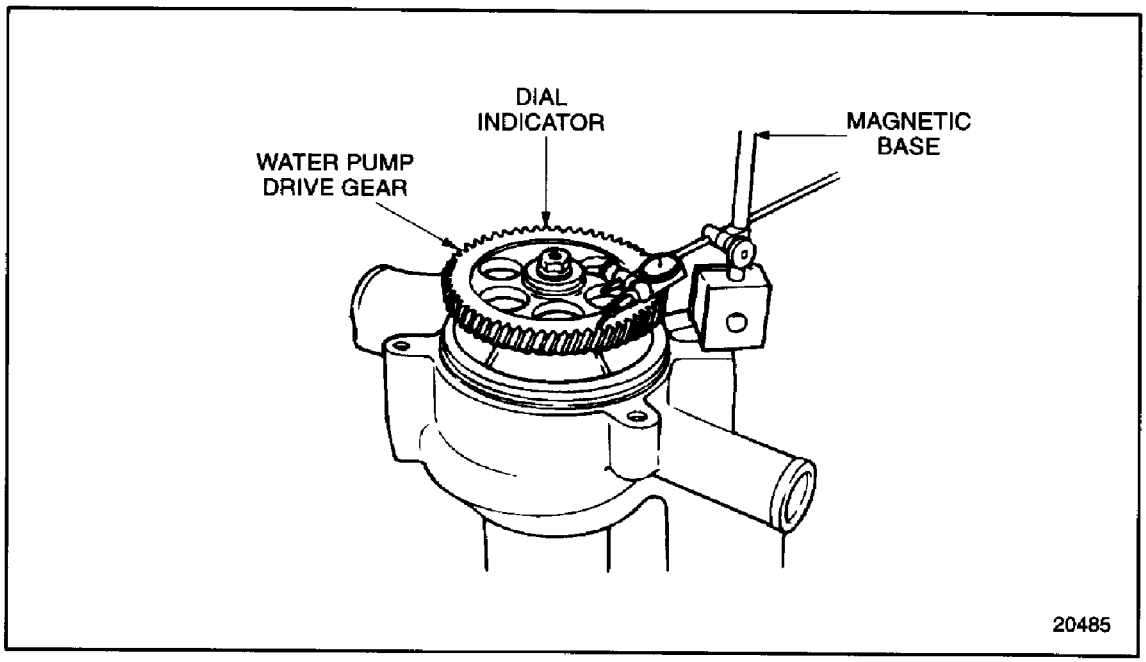

Figure 27-1 Measuring Water Pump Drive Gear Run-out

3. Clamp the water pump drive gear in a vise, with the impeller facing up. Use soft jaws to prevent damage to the gear teeth.
4. Using a 1/2 in. drive torque wrench in the hole provided in the center of the slip-lash tester, apply 68 N·m (50 lb·ft) torque in either direction. The impeller must withstand 68 N·m (50 lb·ft) torque without slipping.
   [a] If the torque 68 N·m (50 lb·ft) is satisfied without the impeller slipping, check combustion gases in coolant; refer to section 27.9.
   [b] If the torque 68 N·m (50 lb·ft) is not satisfied and the impeller is slipping, refer to section 27.8.1.

 Copyright © 2004 DETROIT DIESEL CORPORATION

27.8.1 Water Pump Impeller Replacement

Perform the following steps to replace water pump impeller:

1. Disassemble the water pump and replace worn or damaged impeller; refer to section 4.2.3 for (gear case mounted) or refer to section 4.3.3(gear case cover mounted).
2. Reassemble the water pump with new components as necessary; refer to section 4.2.5 for (gear case mounted) or refer to section 4.3.5 (gear case cover mounted).

27.8.1.1 Test Engine with Repaired Water Pump

Perform the following to determine if thermo-modulated fan replacement resolved high engine coolant temperature:

CAUTION:

To avoid injury before starting and running the engine, ensure the vehicle is parked on a level surface, parking brake is set, and the wheels are blocked.

CAUTION:

Diesel engine exhaust and some of its constituents are known to the State of California to cause cancer, birth defects, and other reproductive harm.

- ☐ **Always start and operate an engine in a well ventilated area.**
- ☐ **If operating an engine in an enclosed area, vent the exhaust to the outside.**
- ☐ **Do not modify or tamper with the exhaust system or emission control system.**

1. Start and run the engine.
2. Run the engine through its operating range with no-load for approximately 5 minutes, allowing the engine coolant to reach normal operating range.
   [a] If the engine coolant temperature is 88-96°C (190-210°F), no further troubleshooting is required. Shut down the engine.
   [b] If the engine coolant temperature is not 88-96°C (190-210°F), shut down the engine. Check combustion gases in coolant; refer to section 27.9.

(Rev. 2004) *All information subject to change without notice.*
6SE483 0401 Copyright © 2004 DETROIT DIESEL CORPORATION

27.9 COMBUSTION GASES IN COOLANT

To determine if combustion gases in coolant is causing high engine coolant temperature, perform the following:

1. Perform a cylinder compression test.
   [a] If test results are to specifications; check radiator coolant flow, refer to section 27.10.
   [b] If test results are not to specifications; refer to section 27.9.1.

27.9.1 Cylinder Head Gasket Replacement

Perform the following steps to replace cylinder head gasket:

1. Remove and replace cylinder head gasket; refer to section 1.2.2.
2. Verify new cylinder head gasket replacement; refer to section 27.9.1.1.

 Copyright © 2004 DETROIT DIESEL CORPORATION

27.9.1.1 Test Engine with Replaced Cylinder Head Gasket

Perform the following to determine if thermo-modulated fan replacement resolved high engine coolant temperature:

CAUTION:

To avoid injury before starting and running the engine, ensure the vehicle is parked on a level surface, parking brake is set, and the wheels are blocked.

CAUTION:

Diesel engine exhaust and some of its constituents are known to the State of California to cause cancer, birth defects, and other reproductive harm.

- ☐ **Always start and operate an engine in a well ventilated area.**
- ☐ **If operating an engine in an enclosed area, vent the exhaust to the outside.**
- ☐ **Do not modify or tamper with the exhaust system or emission control system.**

1. Start and run the engine.
2. Run the engine through its operating range with no-load for approximately 5 minutes, allowing the engine coolant to reach normal operating range.
   [a] If the engine coolant temperature is 88-96°C (190-210°F), no further troubleshooting is required. Shut down the engine.
   [b] If the engine coolant temperature is not 88-96°C (190-210°F), shut down the engine. Check radiator coolant flow; refer to section 27.10.

(Rev. 2004) *All information subject to change without notice.*
6SE483 0401 Copyright © 2004 DETROIT DIESEL CORPORATION

27.10 ABNORMAL RADIATOR COOLANT FLOW

To determine if abnormal radiator coolant flow is causing high engine coolant temperature, perform the following:

1. Install a sight glass with string (both ends) to the radiator outlet hose near radiator and before fill and heater return lines; see Figure 27-2.

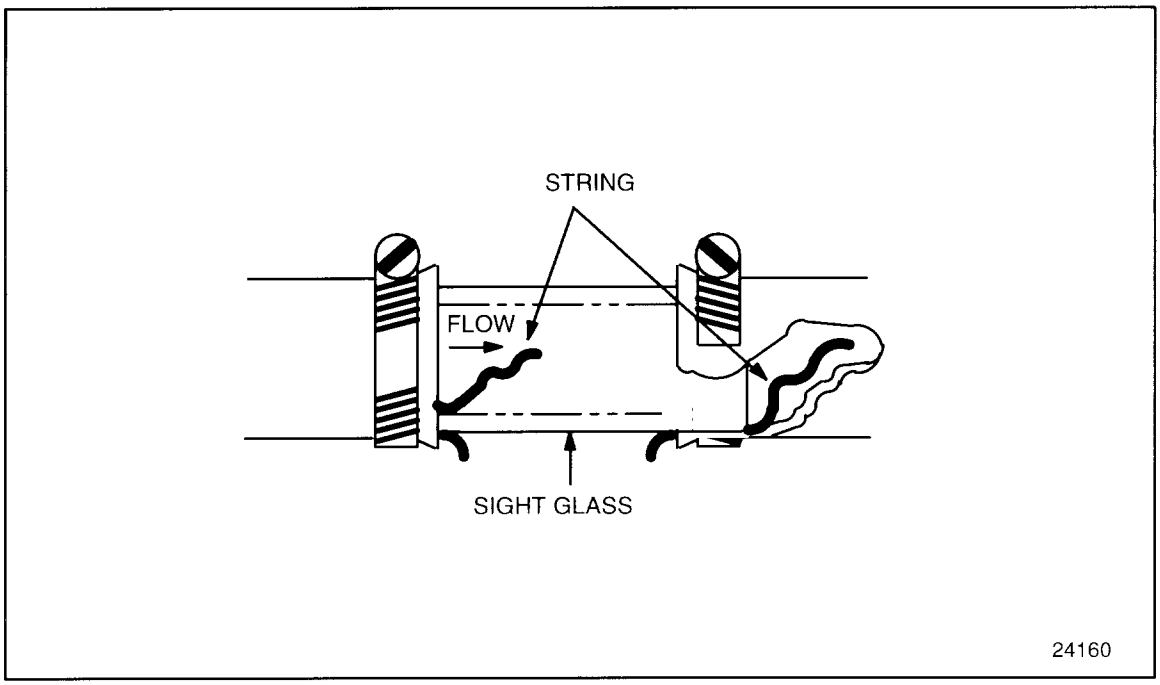

Figure 27-2 Radiator Flow Check

 Copyright © 2004 DETROIT DIESEL CORPORATION

CAUTION:

To avoid injury before starting and running the engine, ensure the vehicle is parked on a level surface, parking brake is set, and the wheels are blocked.

CAUTION:

Diesel engine exhaust and some of its constituents are known to the State of California to cause cancer, birth defects, and other reproductive harm.

- ☐ **Always start and operate an engine in a well ventilated area.**
- ☐ **If operating an engine in an enclosed area, vent the exhaust to the outside.**
- ☐ **Do not modify or tamper with the exhaust system or emission control system.**

2. Start and run the engine at full load.
3. Observe the string for flow and direction as well as the fill and bleed lines. Continue observation while varying the engine speed between 1800 - 2100 r/min.
   [a] If a balanced coolant flow is observed in the sight, call Detroit Diesel Technical Service Group. Shut down the engine.
   [b] If a balanced coolant flow is not observed in the sight glass, refer to section 27.10.1. Shut down the engine.

27.10.1 Abnormal Radiator Coolant Flow Resolution

Perform the following steps, as necessary, to resolve abnormal radiator coolant flow:

1. Correct bleed line size; refer to OEM guidelines.
2. Correct fill line size or connector fitting size; refer to OEM guidelines.
3. Correct restrictive top tank opening; refer to OEM guidelines.
4. Correct location of standpipe; refer to OEM guidelines.
5. Verify repairs made to correct abnormal radiator coolant flow; refer to section 27.10.1.1.

(Rev. 2004) *All information subject to change without notice.*
6SE483 0401 Copyright © 2004 DETROIT DIESEL CORPORATION

27.10.1.1 Test Engine with Resolved Radiator Coolant Flow

Perform the following to determine if thermo-modulated fan replacement resolved high engine coolant temperature:

1. Refer to section 27.10 for the exhaust catuion before preceeding. Start and run the engine.
2. Run the engine through its operating range with no-load for approximately 5 minutes, allowing the engine coolant to reach normal operating range.
   [a] If the engine coolant temperature is 88-96°C (190-210°F), no further troubleshooting is required. Shut down the engine.
   [b] If the engine coolant temperature is not 88-96°C (190-210°F), shut down the engine. Call the Detroit Diesel Technical Service Group.

 Copyright © 2004 DETROIT DIESEL CORPORATION

(Rev. 2004) *All information subject to change without notice.*
6SE483 0401 Copyright © 2004 DETROIT DIESEL CORPORATION

28 LOW COOLANT TEMPERATURE

Section **Page**

28.1 FAULTY THERMOSTATS 28-3

28.2 INSUFFICIENT RADIATOR AIR CIRCULATION 28-5

 Copyright © 2004 DETROIT DIESEL CORPORATION

28.1 FAULTY THERMOSTATS

To determine if faulty thermostats are causing low engine coolant temperature, perform the following:

1. Remove thermostat from the thermostat housing; refer to section 4.5.2.
2. Inspect thermostat for correct operation; refer to section 4.5.2.1.
   [a] If thermostat opened at 97°C (207°F), check insufficient radiator air circulation; refer to section 28.2.
   [b] If thermostat did not open at 97°C (207°F), refer to section 28.1.1.

28.1.1 Thermostat Replacement

Perform the following steps to replace thermostats:

1. Install new thermostat; refer to section 4.5.5.
2. Verify replaced thermostat; refer to section 28.1.1.1.

 Copyright © 2004 DETROIT DIESEL CORPORATION

28.1.1.1 Test Engine with New Thermostat

Perform the following to determine if thermostat replacement resolved low engine coolant temperature:

CAUTION:

To avoid injury before starting and running the engine, ensure the vehicle is parked on a level surface, parking brake is set, and the wheels are blocked.

CAUTION:

Diesel engine exhaust and some of its constituents are known to the State of California to cause cancer, birth defects, and other reproductive harm.

- ☐ **Always start and operate an engine in a well ventilated area.**
- ☐ **If operating an engine in an enclosed area, vent the exhaust to the outside.**
- ☐ **Do not modify or tamper with the exhaust system or emission control system.**

1. Start and run the engine.
2. Run the engine through its operating range with no-load for approximately 5 minutes, allowing the engine coolant to reach normal operating range.
   [a] If the engine coolant temperature is 88-96°C (190-210°F), no further troubleshooting is required. Shut down the engine.
   [b] If the engine coolant temperature is not 88-96°C (190-210°F), shut down the engine. Check insufficient radiator air circulation; refer to section 28.2.

(Rev. 2004) *All information subject to change without notice.*
6SE483 0401 Copyright © 2004 DETROIT DIESEL CORPORATION

28.2 INSUFFICIENT RADIATOR AIR CIRCULATION

To determine if insufficient radiator air circulation is causing high engine coolant temperature, perform the following:

1. Visually examine the radiator and radiator shrouding.
   [a] If the radiator has excessive clogging, debris, or dirt, refer to section 28.2.1.
   [b] If the radiator shrouding is not damaged, incorrectly positioned, or inadequate, and if the radiator is absent of clogging, debris, and dirt, call Detroit Diesel Technical Service Group.
   [c] If the radiator shrouding is damaged, incorrectly positioned, or inadequate, refer to section 28.2.2.

28.2.1 Exterior Radiator Repair

Perform the following for exterior radiator repair:

1. Clean the exterior radiator of all clogging, debris, or excessive dirt; refer to OEM guidelines.
2. Verify exterior radiator repair; refer to section 27.2.2.1.

28.2.2 Radiator Shroud Repair

Perform the following for radiator shroud repair:

1. Repair or replace damaged radiator shrouding; refer to OEM guidelines.
2. Verify exterior radiator repair; refer to section 27.2.2.1.

 Copyright © 2004 DETROIT DIESEL CORPORATION

28.2.2.1 Test Engine with Repaired Exterior Radiator and Shrouding

Perform the following to determine if exterior radiator and shrouding repair resolved high engine coolant temperature:

CAUTION:

To avoid injury before starting and running the engine, ensure the vehicle is parked on a level surface, parking brake is set, and the wheels are blocked.

CAUTION:

Diesel engine exhaust and some of its constituents are known to the State of California to cause cancer, birth defects, and other reproductive harm.

- ☐ **Always start and operate an engine in a well ventilated area.**
- ☐ **If operating an engine in an enclosed area, vent the exhaust to the outside.**
- ☐ **Do not modify or tamper with the exhaust system or emission control system.**

1. Start and run the engine.
2. Run the engine through its operating range with no-load for approximately 5 minutes, allowing the engine coolant to reach normal operating range.
   [a] If the engine coolant temperature is 88-96°C (190-210°F), no further troubleshooting is required. Shut down the engine.
   [b] If the engine coolant temperature is not 88-96°C (190-210°F), shut down the engine. Call Detroit Diesel Technical Service Group.

(Rev. 2004) *All information subject to change without notice.*
6SE483 0401 Copyright © 2004 DETROIT DIESEL CORPORATION

29 POOR FUEL ECONOMY

Section **Page**

29.1 PROBABLE CAUSE #1 29-3

 Copyright © 2004 DETROIT DIESEL CORPORATION

29.1 PROBABLE CAUSE #1

NOT AVAILABLE

 Copyright © 2004 DETROIT DIESEL CORPORATION

(Rev. 2004) *All information subject to change without notice.*
6SE483 0401 Copyright © 2004 DETROIT DIESEL CORPORATION

INDEX

A

Abnormal Radiator Coolant Flow, 27-21
Abnormal Radiator Coolant Flow Resolution, 27-22
Test Engine with Resolved Radiator Coolant Flow, 27-23

Accessory Drive, 1-570
Assembly of the Accessory Drive, 1-588
Disassembly of the Accessory Drive, 1-575
Inspection of the Accessory Drive, 1-587
Installation of the Accessory Drive, 1-602
Removal and Cleaning, 1-574
Repair and Replacement, 1-573

Adjustable Idler Gear Assembly, 1-524
Installation of Adjustable Idler Gear Assembly, 1-533
Removal of Adjustable Idler Gear Assembly, 1-529
Inspection of Adjustable Idler Gear Assembly, 1-532
Repair or Replacement, 1-528

Aerated Fuel, 25-3, 16-5, 23-7, 17-23
Aerated Fuel Repair, 16-6
Test the Engine with Repair, 16-6
Aerated Fuel Resolution, 25-3, 23-8, 17-24
Test Engine with Aerated Fuel Resolution, 17-24
Test the Engine with Aerated Fuel Resolution, 25-4, 23-8

Aerated Fuel Oil, 24-5
Test Engine with Aerated Fuel Resolution, 24-5

Air Cleaner, 6-9
Air Cleaner Installation, 6-10
Removal and Cleaning, 6-10
Repair or Replacement, 6-10

Air Compressor (Vehicle Applications Only), 10-3
Cleaning and Removal, 10-10, 10-15
Inspection of Adaptorless Air Compressor, 10-10
Inspection of Former Air Compressor, 10-15
Installation of Adaptorless Air Compressor, 10-11
Installation of Former Air Compressor, 10-17
Pressure Relief Installation, 10-16

 Copyright © 2004 DETROIT DIESEL CORPORATION

Replacement of Adaptorless Air Compressor, 10-9
Replacement of the Original-type Air Compressor, 10-14
Air Compressor Drive Hub, 10-19
Inspection of Air Compressor Drive Hub, 10-21
Installation of Air Compressor Drive Hub, 10-22
Removal of Air Compressor Drive Hub, 10-20
Replacement of Air Compressor Drive Hub, 10-19
Air Compressor/Raw Water Pump Drive Assembly, 10-24
Assembly of Air Compressor/Raw Water Pump Drive Assembly, 10-35
Cleaning, 10-34
Inspection of the Air Compressor Drive Assembly, 10-35
Disassembly of Air Compressor/Raw Water Pump Drive Assembly, 10-28
Installation of Air Compressor/Raw Water Pump Drive Assembly, 10-48
Removal of Air Compressor/Raw Water Pump Drive Assembly, 10-28
Replacement of Air Compressor/Raw Water Pump Drive Assembly, 10-27
Air Dryer, 6-133
Air Intake Pressure Sensor, 2-216
Installation of Air Intake Pressure Sensor, 2-218
Removal of Air Intake Pressure Sensor, 2-217
Replacement of Air Intake Pressure Sensor, 2-217
Air Intake System Overview, 6-3
Air System, 6-8
Air System for Series 60G Engine (Low Pressure Natural Gas), 6-7
Air Separator, 6-11
Repair or Replacement of Air Separator Filter Element, 6-12
Air Separator Filter Element (Marine), 13-75
Clean Vacuum Limiter Filter Element, 13-78
Clean Vacuum Regulator Filter Element, 13-78
Cleaning, 13-77
Pre-Clean Air Separator Filter Element, 13-76
Air Temperature Sensor, 2-223, 2-227
Installation of Air Temperature Sensor, 2-226, 2-228
Removal of Air Temperature Sensor, 2-225, 2-228
Repair or Replacement, 2-225, 2-228
Assembly Fuel Filter and Water Separator, 2-161
Fuel Return System Check Valve, 2-163

(Rev. 2004) *All information subject to change without notice.*
6SE483 0401 Copyright © 2004 DETROIT DIESEL CORPORATION

Installation of PRO-CHEK Fuel System Check Valve, 2-165
Removal of PRO-CHEK Fuel System Check Valve, 2-164
Inspection of the PRO-CHEK Fuel System Check Valve, 2-164
Replacement of Fuel and Water Separator Element, 2-162

B

Barometric Pressure Sensor, 2-255
Installation of the Barometric Pressure Sensor, 2-256
Removal of the Barometric Pressure Sensor, 2-256
Replacement of the Barometric Pressure Sensor, 2-256
Battery Charging Alternator, 8-4
Installation of Alternator, 8-14
50 DN Alternator Vent Line, 8-19
Checking 12-Rib Poly-Vee Belt-Driven 50 DN Alternator Belt Tension, 8-17
Checking Belt Tension on a 6 – Rib Poly-vee Alternator Drive Belt, 8-18
Checking Belt Tension on a Two-Groove Powerband® Alternator Drive Belt, 8-17
Checking Twin-Vee Belt Driven Alternator Belt Tension, 8-16
Removal of Alternator, 8-11
Inspection of Alternator, 8-14
Repair of Alternator, 8-11
Bull Gear and Camshaft Idler Gear Assembly, 1-535
Installation of Bull Gear and Camshaft Idler Gear Assembly, 1-546
Removal of Bull Gear and Camshaft Idler Gear Assembly, 1-540
Inspection of Bull Gear and Camshaft Idler Gear Assembly, 1-543
Repair or Replacement, 1-539

C

Camshaft and Camshaft Bearing, 1-458
Assembly of Camshaft and Camshaft Bearing, 1-486
Disassembly of Camshaft and Camshaft Bearing, 1-480
Inspection of Camshaft and Camshaft Bearing, 1-480
Installation of Camshaft and Camshaft Bearing, 1-486, 1-503
Test, 1-501
Testing of Camshaft Timing, 1-505, 1-507
Removal of Camshaft and Camshaft Bearing, 1-469
Repair or Replacement, 1-468
Camshaft Drive Gear, 1-510

 Copyright © 2004 DETROIT DIESEL CORPORATION

Installation of Camshaft Drive Gear, 1-519, 1-521
Testing of Camshaft Drive Gear Assembly Run-out, 1-520
Removal of Camshaft Drive Gear, 1-515
Inspection of Camshaft Drive Gear, 1-518
Repair or Replacement, 1-514
Charge Air Cooler, 6-118
Charge Air Cooler Pressure Check, 6-126
Inspection of Charge Air Cooler System, 6-125
Installation of Charge Air Cooler, 6-127
Removal and Cleaning of Charge Air Cooler, 6-125
Repair or Replacement of Charge Air Cooler, 6-125
Charge Air Cooler Raw Water Pump (Keel-Cooled Commercial Marine), 4-72
Assembly of CAC Water Pump, 4-77
Disassembly, 4-75
Inspection, 4-76
Installation, 4-79
Removal, 4-74
Replacement, 4-73
Cleaning Contaminated Lubrication Oil System, 13-87
Before Flushing Lubrication System, 13-87
Flushing a Non-Gelled Oil System, 13-88
Flushing an Oil System that Exhibits Gelling, 13-89
Closed Crankcase Breather, 6-24
Installation of the Closed Crankcase Breather Filter, 6-25
Removal of Closed Crankcase Breather, 6-25
Replacement of the Closed Crankcase Breather, 6-25
Coil Over Plug Ignition System, 15-4
Installation of Ignition Coil, 15-8
Removal of Ignition Coil, 15-7
Inspection of Ignition Coil, 15-7
Combustion Gases in Coolant, 27-19
Cylinder Head Gasket Replacement, 27-19
Test Engine with Replaced Cylinder Head Gasket, 27-20
Connecting Rod, 1-383
Assembly of Connecting Rod, 1-392
Inspection of Assembled Connecting Rod, 1-393

(Rev. 2004) *All information subject to change without notice.*
6SE483 0401 Copyright © 2004 DETROIT DIESEL CORPORATION

Inspection of Connecting Rod Bearings and Bearing Bores, 1-394
Disassembly of Connecting Rod, 1-391
Inspection of Connecting Rod, 1-391
Installation of Connecting Rod, 1-397
Removal and Cleaning, 1-391
Repair or Replacement, 1-390
Connector Tools, 8-69
Coolant, 5-22
Chromate, 5-31
Coolant Inhibitor Elements, 5-31
Coolants Not Recommended, 5-28
Detroit Diesel Cooling System Maintenance Products, 5-31
Soluble Oils, 5-31
Summary of Coolant Recommendations, 5-34
Supplemental Coolant Additive, 5-28
Supplemental Coolant Additive Test Procedures, 5-31
Liquid Supplemental Coolant Additive, 5-32
Test Kit Procedures, 5-33
Water, 5-23
Antifreeze, Inhibited Ethylene Glycol, 5-25
Antifreeze, Inhibited Propylene Glycol, 5-25
Coolant Filter and Conditioner, 4-106
Installation of Coolant Filter and Conditioner, 4-107
Repair or Replacement, 4-107
Inspection of Coolant Filter and Conditioner, 4-107
Coolant Level Sensor, 2-236
Installation of Coolant Level Sensor Module, 2-239
Installation of Coolant Level Sensor Probe, 2-237
Removal of Coolant Level Sensor, 2-237
Removal of Coolant Level Sensor Module, 2-239
Replacement of Coolant Level Sensor, 2-237
Coolant Pressure Control Cap, 4-92
Installation of Pressure Control Cap, 4-95
Removal and Cleaning, 4-94
Inspection of Pressure Control Cap, 4-95
Repair or Replacement, 4-94
Coolant Temperature Sensor, 2-229

 Copyright © 2004 DETROIT DIESEL CORPORATION

Installation of Coolant Temperature Sensor, 2-230
Removal of Coolant Temperature Sensor, 2-230
Repair or Replacement, 2-230
Cooling System Overview, 4-3
Corroded or Damaged Battery Terminals, 17-9
Corroded or Damaged Battery Terminal Repair, 17-9
Test with Repaired Battery Terminals, 17-9
Cranking Motor, 8-29
Installation of Cranking Motor, 8-34
Removal of Cranking Motor, 8-33
Repair of Cranking Motor, 8-33
Crankshaft, 1-148
Installation of Crankshaft, 1-165
Removal and Cleaning, 1-156
Adjacent Journal Alignment, 1-159
Bending Fatigue, 1-162
Crankshaft Cracks, 1-163
Crankshaft Grinding, 1-164
Crankshaft Journal Run-out Measurements, 1-158
Fluorescent Magnetic Particle Method, 1-161
Fluorescent Penetrant Method, 1-161
Inspection for Cracks, 1-160
Inspection of Crankshaft, 1-157
Journal Diameter Measurements, 1-159
Magnetic Particle Method, 1-161
Torsional Fatigue, 1-163
Repair or Replacement, 1-155
Crankshaft Main Bearings, 1-190
Installation of Main Bearings Shells (Crankshaft Removed), 1-202
Removal of Main Bearing Shells, 1-194
Cleaning, 1-199
Inspection of Crankshaft Main Bearings, 1-199
Repair or Replacement, 1-193
Crankshaft Oil Seals, 1-169
Installation of Front and Rear Crankshaft Oil Seal and Wear Sleeve, 1-182
Removal of Front and Rear Crankshaft Oil Seal, 1-172
Removal of Front Crankshaft Oil Seal (Gear Case Housing Removed), 1-173

(Rev. 2004) *All information subject to change without notice.*
6SE483 0401 Copyright © 2004 DETROIT DIESEL CORPORATION

Removal of Front Crankshaft Oil Seal (Gear Case Housing Still Installed), 1-174
Removal of Rear Crankshaft Oil Seal (Flywheel Housing Installed), 1-178
Removal of Rear Oversized Crankshaft Seal with Wear Sleeve, 1-181
Repair or Replacement, 1-171
Crankshaft Pulley, 1-278
Installation of Crankshaft Pulley, 1-289
Removal and Cleaning Crankshaft Pulley, 1-284
Inspection of Crankshaft Pulley or Spindle and Crankshaft Pulley and Hub Assembly, 1-287
Repair or Replacement of Crankshaft Pulley, 1-283
Crankshaft Timing Gear and Timing Wheel, 1-549
Installation of Crankshaft Timing Gear and Timing Wheel, 1-561
Removal of Crankshaft Timing Gear and Timing Wheel, 1-553
Inspection of Crankshaft Timing Gear and Timing Wheel, 1-560
Repair or Replacement, 1-551
Crankshaft Vibration Damper, 1-269
Cleaning and Removal, 1-273
Inspection of the Vibration Damper, 1-275
Installation of Crankshaft Vibration Damper, 1-276
Repair or Replacement, 1-272
Cylinder Block and Cylinder Liner, 1-3
Cleaning the Cylinder Block, 1-12
General Inspection, 1-24
Inspection of Deck Flatness, 1-21
Inspection of Main Bearing Bores, 1-23
Inspection of the Cylinder Block, 1-19
Rust Prevention, 1-24
Testing the Cylinder Block (Immersion Pressure Method), 1-15
Testing the Cylinder Block (Leak-Marker Pressure), 1-17
Reassembly of Cylinder Block, 1-25
Removal and Disassembly, 1-7
Repair or Replacement, 1-6
Cylinder Head, 1-30
Assembly of Cylinder Head, 1-57
Cleaning, 1-49
Inspection and Rework, 1-53
Inspection and Reworking, 1-56
Inspection of Cylinder Head, 1-49

 Copyright © 2004 DETROIT DIESEL CORPORATION

Pressure Testing of Cylinder Head, 1-50
Verification of Countersink Geometry, 1-55
Installation of Cylinder Head, 1-58
Removal and Cleaning, 1-37
Repair or Replacement, 1-36
Cylinder Liner, 1-398
Installation of Cylinder Liner, 1-410
Removal and Cleaning, 1-404
Cleaning, 1-406
Inspection of Cylinder Liner, 1-406
Repair or Replacement, 1-403

D

Daily Maintenance - All Applications, 13-4
Daily Maintenance - Marine Applications, 13-5
DDEC I, 2-199
Installation of DDEC I Electronic Control Module, 2-204
Removal of DDEC I Electronic Control Module, 2-204
Replacement of the DDEC I Electronic Control Module, 2-201
DDEC II Electronic Control Module, 2-187
Diagnostic Procedures, 2-188
Installation of DDEC II Electronic Control Module, 2-190
Installation of the DDEC II EPROM, 2-197
Testing of the ECM, 2-198
Removal of DDEC II Electronic Control Module, 2-190
Removal of the DDEC II EPROM, 2-196
Replacement of the DDEC II Electronic Control Module, 2-188
Replacement of the DDEC II EPROM, 2-194
DDEC II Engine Sensor Harness, 8-51
Diagnostic Procedures, 8-53
Installation of DDEC II Engine Sensor Harness, 8-56
Removal of DDEC II Engine Sensor Harnesses, 8-55
Inspection of DDEC II Engine Sensor Harness, 8-56
Repair and Replacement, 8-54
DDEC III/IV Electronic Control Module, 2-179
Installation of the DDEC III/IV Electronic Control Module, 2-185
Removal of the DDEC III/IV Electronic Control Module, 2-185

(Rev. 2004) *All information subject to change without notice.*
6SE483 0401 Copyright © 2004 DETROIT DIESEL CORPORATION

Repair or Replacement, 2-185
DDEC III/IV Engine Sensor Harness, 8-41
Diagnostic Procedures, 8-42
Installation of DDEC III/IV Engine Sensor Harness, 8-45
Installation of Optimized Idle Starter Relay Harness Overlay Kit Components, 8-49
Installation of Starter Relay Harness Overlay Service Kit, 8-46
Qualifying the ECM, 8-46
Preparation of Engine, 8-46
Removal of DDEC III/IV Engine Sensor Harnesses, 8-44
Repair and Replacement, 8-43
Verify Installation, 8-50
DDEC V Electronic Control Unit, 2-171
Installation of the DDEC V Electronic Control Unit, 2-176
Removal of the DDEC V Electronic Control Unit, 2-176
Repair or Replacement, 2-176
Defective Air Compressor, 20-5, 19-8
Air Compressor Removal, 19-9
Test Engine with Repaired Air Compressor, 19-9
Air Compressor Repair, 20-5
Test Engine with Repaired Air Compressor, 20-6
Defective Bypass Valve, 26-19
Oil Filter Adaptor Repair, 26-19
Test Engine with Repaired Oil Filter Adaptor, 26-19
Defective Coolant Hoses, 27-9
Coolant System Hoses Replacement, 27-9
Test Engine with Replaced Coolant Hoses, 27-10
Defective Crankshaft Main Bearing Shells, 26-24
Crankshaft Main Bearing Shell Repair, 26-24
Test Engine with New Crankshaft Main Bearing Shells, 26-25
Defective Fuel Pump, 23-5
Drive Hubs and Coupling Replacement, 23-5
Engine Test with Replaced Drive Hubs or Replaced Coupling, 23-6
Defective Magnetic Switch, 18-5, 17-10
Magnetic Switch Replacement, 18-7, 17-12
Test Engine with New Magnetic Switch, 18-7
Test Engine with Replaced Magnetic Switch, 17-12

 Copyright © 2004 DETROIT DIESEL CORPORATION

Defective Oil Pump Assembly, 26-26
Oil Pump Assembly Repair, 26-26
Test Engine with Repaired Oil Pump Assembly, 26-27
Defective Pickup Screen Tube and Screen Assembly, 26-22
Pickup Screen Tube and Screen Assembly Repair, 26-22
Test Engine with Repaired Pickup Screen Tube and Screen Assembly, 26-23
Defective Pressure Relief Valve, 26-20
Pressure Relief Valve Repair, 26-20
Test Engine with Repaired Relief Valve, 26-21
Defective Starter, 18-8, 17-13
Starter Replacement, 18-9, 17-13
Test Engine with New Starter, 18-9
Test Engine with Replaced Starter, 17-14
Defective Turbocharger, 22-3, 20-7, 19-10, 21-13
Turbocharger Replacement, 22-4, 20-7, 19-10, 21-13
Test Engine with New Turbocharger, 20-7, 19-10
Test Engine with Replaced Turbocharger, 22-5, 21-14
Description, 13-38
Air Cleaner, 13-60
Air Compressor, 13-60
Air System, 13-62
Battery, 13-54
Battery Charging Alternator, 13-63
Charge Air Cooler/Auxiliary Pump, 13-72
Coolant Filter and Water Pump, 13-61
Cooling System, 13-46
Crankcase Breather, 13-67
Crankcase Pressure, 13-63
Crankcase Pressure Test Without Dynamometer, 13-63
Cranking Motor, 13-61
Drive Belts, 13-55
Inspect for Belt Wear, 13-59
Inspect for Foreign Objects, 13-59
Inspect for Noise Vibration, 13-59
Inspect for Rib Cracking, 13-57
Inspect for Rib Sidewall Glazing, 13-59
Engine (Steam Clean), 13-62

(Rev. 2004) *All information subject to change without notice.*
6SE483 0401 Copyright © 2004 DETROIT DIESEL CORPORATION

Engine and Transmission Mounts, 13-63
Engine Tune-up, 13-69
Exhaust System, 13-62
Fan Hub, 13-67
Fuel Cooler, 13-73
Fuel Filters (Diesel), 13-60
Fuel Filters (Natural Gas), 13-61
Fuel Injectors, 13-73
Fuel Lines and Flexible Hoses, 13-45
Fuel Tanks, 13-44
Guidelines, 13-49
Source of Premature Failure, 13-49
Water Pump Leak Test Summary, 13-52
Water Pump Seal Assessment, 13-50
Heat Exchanger, 13-73
Intake System, 13-67
Lubricating Oil, 13-42
Lubricating Oil Filter, 13-60
Marine Gear, 13-70
Oil Pressure, 13-62
Radiator, 13-62
Raw Water Pump, 13-71
Raw Water System Zincs, 13-71
Test Procedure, 13-53
Stop Engine Light Did Not Illuminate, 13-54
Thermostats and Seals, 13-67
Transmission or Marine Gear, 13-54
Turbocharger, 13-54
Vibration Damper, 13-74
Detecting Internal Fuel Leaks, 13-79
Fuel Leak Tests (Injectors Installed/Engine Off), 13-79
Fuel Pressure Test, 13-80
Injector Bench Test with J 34760-A Pop-n-fixture, 13-86
Injector 'Pop Test (on Engine) With J 37050-A, 13-84
Prepare Test Fuel, 13-79
Diesel Fuel Filters (Spin-on), 2-115
Diesel Fuel System Overview, 2-5

 Copyright © 2004 DETROIT DIESEL CORPORATION

Discharged Battery, 18-3
Discharged Battery Resolution, 18-3
Test Engine with New Battery, 18-4

E

Electronic Control Module Wiring Harness, 17-3
ECM Power Harness Voltage Test, 17-4
Power Harness Repair, 17-5
Test Engine with Repaired Power Harness, 17-5
Vehicle Circuit Breakers or Fuses Check, 17-3
Electronic Distributor Unit DDEC I, 2-209
Installation of Electronic Distributor Unit, 2-211
Removal of Electronic Distributor Unit, 2-210
Replacement of the Electronic Distributor Unit, 2-210
Electronic Engine Control, 2-169
Electronic Foot Pedal Assembly, 2-213
Replacement of Electronic Foot Pedal Assembly, 2-213
Electronic Unit Injector, 2-11
Disassembly of Electronic Unit Injector, 2-20
Inspection of the Electronic Unit Injector, 2-20
Installation of the Electronic Unit Injector, 2-24
Removal of Electronic Unit Injector, 2-17
Repair of Electronic Unit Injector Solenoid and Seals, 2-21
Repair or Replacement, 2-16
Empty Fuel Tank, 17-6
Low Fuel Level Resolution, 17-6
Test Engine with Filled Tank, 17-6
Engine Cooling Fan, 4-96
Assembly of Engine Cooling Fan, 4-103
Cleaning, 4-103
Disassembly of Engine Cooling Fan, 4-101
Inspection of Engine Cooling Fan, 4-102
Installation of the Engine Cooling Fan, 4-105
Removal of Engine Cooling Fan, 4-101
Repair and Replacement, 4-100
Engine Lifter Brackets, 1-118

(Rev. 2004) *All information subject to change without notice.*
6SE483 0401 Copyright © 2004 DETROIT DIESEL CORPORATION

Installation of Lifter Bracket, 1-125
Removal and Cleaning, 1-125
Inspection of Lifter Bracket, 1-125
Repair or Replacement, 1-124

Engine Run-in Instructions, 11-20
Chassis Dynamometer Room Ventilation Recommendations, 11-21
Dynamometer Test and Run-in Procedure, 11-22
Instrumentation, 11-23
Run-in Procedure, 11-23
The Basic Engine, 11-20

Engine Tune-Up procedures, 12-3, 12-25

Exhaust Gas Oxygen Sensor, 2-247
Installation of the Exhaust Gas Oxygen Sensor and the Oxygen Sensor Interface Module, 2-250
Removal of the Exhaust gas Oxygen Sensor and the Oxygen Sensor Interface Module, 2-249
Replacement of the Exhaust Gas Oxygen Sensor and the Oxygen Sensor Interface Module, 2-249

Exhaust Manifold, 7-6
Cleaning of Exhaust Manifold, 7-9
Inspection of the Exhaust Manifold, 7-9
Installation of One-Piece Water-Cooled Exhaust Manifold, 7-15
Installation of Three-Piece Exhaust Manifold, 7-13
Removal and Cleaning, 7-9
Repair or Replacement, 7-8

Exhaust Temperature Sensor, 2-251
Installation of the Exhaust Gas Temperature Sensor, 2-251
Removal of the Exhaust Gas Temperature Sensor, 2-251
Replacement of the Exhaust Gas Temperature Sensor, 2-251

External Oil Leaks, 19-4
Engine Oil Leak Repair, 19-5
Test Engine with Repairs Made to Correct Oil Leaks, 19-5

F

Fan Belts are Incorrectly Adjusted, 27-11
Belt Tension Resolution, 27-11
Test Engine with Correct Belt Tension, 27-12

Faulty Electronic Control Module, 23-14, 16-26

 Copyright © 2004 DETROIT DIESEL CORPORATION

Faulty ECM Repair, 16-26
Verification of Repair, 16-27
Test Engine with Repair to the Electronic Control Unit, 23-14
Faulty Exhaust System, 21-9, 25-15
Engine Exhaust System Resolution, 21-10, 25-15
Test the Engine with Replaced Exhaust System, 21-10, 25-16
Faulty Fuel Injector, 21-11, 23-13, 16-24
Faulty Fuel Injector Repair, 21-12, 16-25
Verification of Repair, 21-12, 16-25
Test the Engine with Repaired Fuel Injector, 23-13
Faulty Oil Pressure Gauge Sensor, 26-9
Oil Pressure Gage Sensor Replacement, 26-9
Test the Engine with Replaced Oil Pressure Gage Sensor, 26-10
Faulty Pressure Control Cap, 27-7
Pressure Control Cap Resolution, 27-7
Test Engine with Replaced Pressure Control Cap, 27-8
Faulty Thermostats, 28-3, 27-15
Thermostat Replacement, 28-3, 27-15
Test Engine with New Thermostat, 28-4, 27-16
Faulty Water Pump, 27-17
Water Pump Impeller Replacement, 27-18
Test Engine with Repaired Water Pump, 27-18
Flywheel, 1-294
Installation of Flywheel, 1-300
Removal and Cleaning, 1-297
Inspection of Flywheel, 1-299
Repair or Replacement, 1-296
Flywheel Housing, 1-306
Installation of Flywheel Housing, 1-310
Test for Flywheel Housing Bore Concentricity, 1-312
Removal and Cleaning, 1-308
Inspection of Flywheel Housing and Rear Oil Seal Area, 1-309
Repair or Replacement, 1-307
Front Mounted Power Take-Off, 9-3
Installation of Front Mounted Power Take-off, 9-7
Removal of Front Mounted Power Take-off, 9-5

(Rev. 2004) *All information subject to change without notice.*
6SE483 0401 Copyright © 2004 DETROIT DIESEL CORPORATION

Inspection of Front Mounted Power Take-off, 9-7
Repair and Replacement, 9-5
Fuel, 5-3
Biodiesel Fuels, 5-5
Cold Weather Operation, 5-8
Fuel Cleanliness, 5-8
Fuel Lubricity, 5-5
Other Fuels, 5-6
Prohibited Fuel Additives, 5-9
Specifications for Natural Gas Engine, 5-11
Waste Oil Disposal and Rerefined Oils, 5-10
Fuel Cooler (Heat Exchanger-Cooled Marine Engine), 2-157
Installation, 2-160
Removal, 2-158
Inspection, 2-159
Fuel Filter Type, 2-148
Installation of Fuel Filter, 2-155
Removal of Fuel Filter, 2-150
Replacement of Fuel Filter, 2-149
Fuel Injector Tube and O-ring, 2-30
Cleaning of Injector Tube, 2-34
Installation of Auxiliary Injector Seal, 2-34
Installation of Injector Tube and O-ring, 2-36
Check Injector Tip Protrusion, 2-45
Removal of the Injector Tube and O-ring, 2-31
Repair or Replacement, 2-30
Fuel Mixer, 2-293
Cleaning of Fuel Mixer, 2-294
Inspection of Fuel Mixer, 2-294
Test of Fuel Mixer, 2-295
Disassembly of Fuel Mixer, 2-294
Installation of Fuel Mixer, 2-295
Removal of Fuel Mixer, 2-294
Replacement of Fuel Mixer, 2-294
Fuel Mixer for the Series 60G High Pressure Fuel System, 2-275
Installation of Fuel Mixer, 2-276
Removal of Fuel Mixer, 2-276

 Copyright © 2004 DETROIT DIESEL CORPORATION

Replacement of Fuel Mixer, 2-276

Fuel Pressure Gages, 2-263
Installation of Fuel Pressure Gages, 2-263
Removal of Fuel Pressure Gages, 2-263
Inspection of Fuel Pressure Gages, 2-263
Replacement of Fuel Pressure Gages, 2-263

Fuel Pressure Sensor, 2-240
Installation of Fuel Pressure Sensor, 2-242
Removal of Fuel Pressure Sensor, 2-242
Replacement of Fuel Pressure Sensor, 2-242

Fuel Pro 380/380E Fuel Filter System, 2-124
Installation of Fuel Pro 380E Fuel Filter Element, 2-129
Replacement of Fuel Pro 380E Fuel Filter Element, 2-128

Fuel Pump, 17-21
Drive Hubs and Coupling Replacement, 17-21
Engine Test with Replaced Drive Hubs or Replaced Coupling, 17-22

Fuel Pump Drive, 2-110
Installation, 2-113
Lubrication of Fuel Pump Drive Bearing, 2-112
Removing Fuel Pump Drive Assembly, 2-112
Clean the Fuel Pump Drive Assembly, 2-112
Inspection, 2-112

Fuel Pump With One-piece Drive Shaft and Hub Assembly, 2-87
Assembly of Fuel Pump (One-piece Drive Shaft), 2-101
Disassembly of Fuel Pump (One-piece Drive Shaft), 2-96
Cleaning and Inspection, 2-100
Installation of Air Compressor-Driven Fuel Pump (One-piece Drive Shaft), 2-109
Installation of Gear Train-Driven Fuel Pump (One-piece Drive Shaft), 2-107
Removal of Fuel Pump (One-piece Drive Shaft), 2-96
Repair or Replacement, 2-95

Fuel Pump with Separate Drive Shaft and Hub, 2-64
Assembly of Former Fuel Pump, 2-77
Disassembly of Former Fuel Pump, 2-72
Cleaning and Inspection, 2-76
Installation of Former Air Compressor-Driven Fuel Pump, 2-86
Installation of Former Gear Train-Driven Fuel Pump, 2-84

(Rev. 2004) *All information subject to change without notice.*
6SE483 0401 Copyright © 2004 DETROIT DIESEL CORPORATION

Removal of Former Fuel Pump, 2-72
Repair or Replacement, 2-71
Fuel Shutoff Valve, 2-278
Installation of the Fuel Shutoff Valve, 2-279
Removal of the Fuel Shutoff Valve, 2-279
Replacement of the Fuel Shutoff Valve, 2-279
Fuel Supply Valve, 17-17
Fuel Supply Valve Repair, 17-17
Test Engine with Fuel Supply Valve Open, 17-18
Fuel Temperature Sensor, 2-243
Installation of Fuel Temperature Sensor, 2-246
Removal of Fuel Temperature Sensor, 2-246
Replacement of Fuel Temperature Sensor, 2-246

G

Gear Case, 1-237
Installation of Gear Case, 1-258
Removal of Gear Case, 1-250
Inspection of Gear Case, 1-257
Repair or Replacement, 1-249
Gear Case Cover, 1-203
Installation of Acoustical Gear Case Covers, 1-228
Installation of Gear Case Cover, 1-221
Removal of Engine Gear Case Cover, 1-213
Inspection of Gear Case Cover, 1-221
Repair or Replacement, 1-212
Gear Train and Engine Timing, 1-413
Cleaning of Gear Train and Engine Timing, 1-421
Check Engine Timing, 1-421
Installation of Gear Train and Engine Timing, 1-442
Repair or Replacement, 1-417

H

Heat Exchanger (Pleasure Craft Marine), 4-112
Assembly, 4-122
Disassembly, 4-117
Inspection, 4-121

 Copyright © 2004 DETROIT DIESEL CORPORATION

Installation, 4-125
Removal, 4-116
Inspection, 4-117
Repair or Replacement of the Heat Exchanger, 4-115
Heat Exchanger Cooling System (Pleasure Craft Marine), 4-110
High Altitude Operation, 25-19
High Fuel Oil Temperature Return, 24-8–25-9
High Fuel Oil Temperature Resolution, 24-9
Test the Engine with Replaced Oil Filters, 24-10
Test the Engine with Resolved High Fuel Oil Temperature, 25-10
High Fuel Pressure, 25-5
Restricted Fitting and Check Valve Replacement, 25-8
Test the Engine with Replaced Check Valve and Restricted Fitting, 25-8
High Inlet Air Temperature, 25-17
Radiator Fan, Drive and Shroud Replacement, 25-17
Test the Engine with Radiator Fan, Fan Drive, or Fan Shroud Replacement, 25-18
High Pressure Fuel Regulator, 2-269
Installation of the High Pressure Regulator, 2-270
Removal of the High Pressure Regulator, 2-270
Replacement of the High Pressure Regulator, 2-270

I

Igniter Module, 15-10
Installation of Igniter Module, 15-10
Removal of Igniter Module, 15-10
Inspection of Igniter Module, 15-10
Igniter Module Bracket, 15-11
Installation of Igniter Module Bracket, 15-11
Removal of Igniter Module Bracket, 15-11
Inspection of Igniter Module Bracket, 15-11
Ignition Boot Assembly, 15-9
Installation of Ignition Boot, 15-9
Removal of Ignition Boot, 15-9
Ignition Coil Harness, 15-12
Inspection of Ignition Coil Harness, 15-14
Installation Ignition Coil Harness, 15-15

(Rev. 2004) *All information subject to change without notice.*
6SE483 0401 Copyright © 2004 DETROIT DIESEL CORPORATION

Removal of Ignition Coil Harness, 15-14
Cleaning of Ignition Coil Harness, 15-14
Impco Low Pressure Fuel Regulator, 2-280
Installation of the Low Pressure Regulator, 2-281
Removal of the Low Pressure Regulator, 2-281
Replacement of the Low Pressure Regulator, 2-281
Improper Engine Coolant Level, 27-3
Improper Coolant Level Resolution, 27-3
Test Engine with Proper Coolant Level, 27-4
Improper Engine Oil Level, 26-3
Low Engine Oil Level Resolution, 26-3
Test for Proper Engine Oil Level, 26-4
Improper Grade, 21-3
Improper Grade, 23-3
Test the Engine with New Fuel Oil, 23-4
Improper Injector Calibration Setting (DDEC III/IV Engines Only), 16-7, 23-9, 24-11
Improper Injector Setting Repair, 16-9, 24-12
Test the Engine with Corrected Injector Setting, 24-12
Verification of Repair, 16-11
Test Engine with Corrected Injector Setting, 23-9
Improper Lubricating Oil Viscosity, 26-5
Lubricating Oil Replacement, 26-5
Test Engine with Replaced Lubricating Oil, 26-6
Improper Valve Clearance or Injector Height, Worn or Damaged Camshaft Lobes and Rollers, 23-11–16-12
Improper Valve Clearance or Injector Height Repair, 16-20
Verification of Repair, 16-23
Test Engine with Corrected Valve Clearance or Injector Height, Worn or Damaged Camshaft Lobes and Rollers, 23-12
Incorrect Camshaft Timing, 25-21
Engine Timing Resolution, 25-21
Test Engine with Correct Timing, 25-22
Inoperative Thermo-modulated Fan, 27-13
Thermo-modulated Fan Replacement, 27-13
Test Engine with Replaced Thermo-modulated Fan, 27-14
Insufficient Fuel Oil Flow, 24-6

 Copyright © 2004 DETROIT DIESEL CORPORATION

Insufficient Fuel Oil Flow Resolution, 24-6
Test the Engine with Resolved Fuel Oil Flow, 24-7
Insufficient Radiator Air Circulation, 27-5
Exterior Radiator Repair, 28-5
Radiator Shroud Repair, 27-5
Test Engine with Repaired Exterior Radiator and Shrouding, 27-6
Intake Manifold, 6-13
Cleaning, 6-19
Inspection of Intake Manifold, 6-20
Installation of Intake Manifold, 6-21
Removal of Intake Manifold, 6-18
Repair or Replacement, 6-17
Internal Engine Damage, 18-10
Internal Engine Damage Replacement, 18-10
Test Engine with Replaced Components, 18-11

J

Jabsco® Engine Cooling Raw Water Pump (Marine), 4-128
Assembly of the Jabsco Raw Water Pump, 4-139
Disassembly of the Jabsco Raw Water Pump, 4-134
Inspection of the Jabsco Raw Water Pump, 4-138
Installation of the Jabsco Raw Water Pump, 4-141
Removal of the Jabsco Raw Water Pump, 4-133
Repair or Replacement, 4-132
Jake Brake®, 1-603
Assembly, 1-623, 1-652
Disassembly, 1-613
Cleaning, 1-621, 1-649
Inspection, 1-622–1-623, 1-650
Installation, 1-630, 1-658
Adjustment, 1-639
Set Slave Piston Lash, 1-660
Removal, 1-611, 1-644
Disassembly, 1-646
Repair or Replacement, 1-610

(Rev. 2004) *All information subject to change without notice.*
6SE483 0401 Copyright © 2004 DETROIT DIESEL CORPORATION

K

Keel Cooling System (Commercial Marine), 4-109

Kim Hot Start Starting Aid System (Marine), 10-50

Knock Sensor and Signal Noise Enhancement Filter Module, 2-252
- Installation of Knock Sensor and Signal Noise Enhancement Filter Module, 2-254
- Removal of Knock Sensor and Signal Noise Enhancement Filter Module, 2-254
- Replacement of Knock Sensor and Signal Noise Enhancement Filter Module, 2-254

L

Leaking Oil Cooler Core, 19-6
- Oil Cooler Core Replacement, 19-6
  - Test Engine for Reduced Oil Consumption, 19-7
  - Test Engine with New Oil Cooler Core, 19-7

Low Battery Voltage, 24-3, 17-7
- Battery Replacement, 24-4, 17-7
  - Test Engine with Replaced Battery, 24-4, 17-8

Low Compression, 17-27
- Low Compression Repair, 17-27
  - Test Engine with Repaired Cylinder Head Valve(s), and Cylinder Kit, 17-28

Low Compression Pressure, 24-13
- Low Compression Repair, 24-13
  - Test Engine with Repaired Cylinder Head Valve(s) and Cylinder Kit, 24-14

Low Cranking Speed, 17-15
- Low Cranking Speed Repair, 17-15
  - Test Engine with Replaced Oil, 17-16

Low Pressure Fuel Regulator, 2-289
- Cleaning of the Low Pressure Fuel Regulator, 2-290
  - Inspection of the Low Pressure Fuel Regulator, 2-290
  - Test of the Low Pressure Fuel Regulator, 2-290
- Disassembly of the Low Pressure Fuel Regulator, 2-290
- Installation of the Low Pressure Fuel Regulator, 2-290
- Removal of the Low Pressure Fuel Regulator, 2-289
- Reuse or Replacement, 2-289

Lubricating Oil, 5-19
- Oil Change Intervals, 5-20
- Used Lubricating Oil Analysis, 5-21

 Copyright © 2004 DETROIT DIESEL CORPORATION

Lubricating Oil (Diesel), 5-12
Filter Selection and Change Intervals, 5-16
Lubricant Requirement — All Diesel, Except Pleasure Craft Marine, 5-12
Lubricant Requirement — Heat Exchanger-Cooled Pleasure Craft Marine, 5-14
Miscellaneous Fuel and Lubricant Information, 5-18
Oil Change Interval, 5-15
Statement of Policy on Supplemental Fuel and Lubricant Additives, 5-16
Used Lubricating Oil Analysis Guidelines, 5-18
Lubricating Oil and Filter Change Intervals, 13-27, 13-37
150 hrs (or 3 months) Interval Maintenance (Continuous/Prime Duty), 13-37
150 hrs (or 3 months) Interval Maintenance (Standby Duty), 13-37
200 hrs (or 3 months) Interval Maintenance (Continuous/Prime Duty), 13-37
200 hrs (or 6 months) Interval Maintenance (Standby Duty), 13-37
250 hrs (or 12 months) Interval Maintenance (Standby Duty), 13-27
250 hrs (or 3 months) Continuous Duty Interval Maintenance (Continuous/Prime Duty), 13-27
Lubricating Oil Diluted With Fuel Oil or Engine Coolant, 26-7
Contaminated Lubricating Oil Resolution, 26-7
Test Replaced Lubricating Oil, 26-8

M

Maintenance, 13-6, 13-22
1000 hrs (or 13 months) Interval Maintenance, 13-23
150 hrs (or 2 months) Interval Maintenance, 13-23
1500 hrs (or 20 months) Interval Maintenance, 13-23
2000 hrs (or 26 months) Interval Maintenance, 13-24
300 hrs (or 4 months) Interval Maintenance, 13-23
3000 hrs (or 39 months) Interval Maintenance, 13-24
4000 hrs (or 52 months) Interval Maintenance, 13-24
600 hrs (or 8 months) Interval Maintenance, 13-23
Air Cleaner, 13-9
Air Separator Filter Element and Vacuum Limiter, 13-8
Battery, 13-9
Charge Air Cooler — Keel-Cooled Engine, 13-7
Cooling System, 13-10
Crankcase Breather (in valve rocker cover), 13-8
Daily Maintenance, 13-22
Engine Coolant, 13-10

(Rev. 2004) *All information subject to change without notice.*
6SE483 0401 Copyright © 2004 DETROIT DIESEL CORPORATION

Engine Mounts, 13-8
Fuel Cooler, 13-6
Fuel Filters, 13-9
Fuel Injectors, 13-6
Fuel System, 13-10
Heat Exchanger, 13-6
Hoses, 13-10
Lube Oil Filters, 13-9
Marine Gear, 13-7
Monthly Maintenance, 13-22
Raw Water System Zincs, 13-7
Thermostats and Seals, 13-8
Valve Lash and Injector Height, 13-7
Vibration Damper, 13-6
Water Pump, 13-9

Maintenance of Engines Used in Stationary and Industrial Applications, 13-16
1,050 Hours (31,500 Miles - 50,700 km) Maintenance, 13-18
1,200 Hours (36,000 Miles - 58,000 km) Maintenance, 13-20
1,350 Hours (40,500 Miles - 65,000 km) Maintenance, 13-20
1,500 Hours (45,000 Miles - 72,000 km) Maintenance, 13-21
100 Hours (3,000 Miles - 4,800 km) Maintenance, 13-16
150 Hours (4,500 Miles - 7,200 km) Maintenance, 13-16
300 Hours (9,000 Miles - 14,500 km) Maintenance, 13-16
4000 Hours, 13-21
450 Hours (13,500 Miles - 21,700 km) Maintenance, 13-17
600 Hours (18,000 Miles - 29,000 km) Maintenance, 13-17
750 Hours (22,500 Miles - 36,000 km) Maintenance, 13-17
900 Hours (27,000 Miles - 43,500 km) Maintenance, 13-18

Maintenance of Series 60G Automotive Engines, 13-31
102,000 Miles (164,000 km) Interval Maintenance, 13-35
108,000 Miles (174,000 km) Interval Maintenance, 13-35
114,000 Miles (183,000 km) Interval Maintenance, 13-35
12,000 Miles (19,000 km) Interval Maintenance, 13-31
120,000 Miles (193,000 km) Interval Maintenance, 13-35
18,000 Miles (29,000 km) Interval Maintenance, 13-31
24,000 Miles (39,000 km) Interval Maintenance, 13-31
30,000 Miles (48,000 km) Interval Maintenance, 13-32

 Copyright © 2004 DETROIT DIESEL CORPORATION

36,000 Miles (58,000 km) Interval Maintenance, 13-32
4,000 Hours Interval Maintenance, 13-36
42,000 Miles (68,000 km) Interval Maintenance, 13-32
48,000 Miles (77,000 km) Interval Maintenance, 13-32
54,000 Miles (87,000 km) Interval Maintenance, 13-33
6,000 Miles (10,000 km) Interval Maintenance, 13-31
60,000 Miles (97,000 km) Interval Maintenance, 13-33
66,000 Miles (106,000 km) Interval Maintenance, 13-33
72,000 Miles (116,000 km) Interval Maintenance, 13-33
78,000 Miles (126,000 km) Interval Maintenance, 13-34
84,000 Miles (135,000 km) Interval Maintenance, 13-34
90,000 Miles (145,000 km) Interval Maintenance, 13-34
96,000 Miles (154,000 km) Interval Maintenance, 13-34

Maintenance of Series 60G Engines, 13-25
1,000 hrs (or 12 months) Interval Maintenance, 13-26
1,500 hrs (or 12 months) Interval Maintenance, 13-26
250 hrs (or 3 months) Interval Maintenance, 13-25
3,800 hrs (or 24 months) Interval Maintenance, 13-26
500 hrs (or 6 months) Interval Maintenance, 13-25
Daily Maintenance for Genset, 13-25

Maintenance of Vehicle Engines, 13-11
105,000 Miles (169,000 km) or 42 Month Interval Maintenance, 13-14
120,000 Miles (193,000 km) or 48 Month Interval Maintenance, 13-14
135,000 Miles (217,000 km) or 54 Month Interval Maintenance, 13-15
15,000 Miles (24,000 km) or 6 Month Interval Maintenance, 13-11
150,000 Miles (241,000 km) or 60 Month Interval Maintenance, 13-15
200,00 Miles (321,000 km) or 4000 Hours Interval Maintenance, 13-15
30,000 Miles (48,000 km) or 12 month Interval Maintenance, 13-11
45,000 Miles (72,000 km) or 18 Month Interval Maintenance, 13-12
60,000 Miles (97,000 km) or 24 Month Interval Maintenance, 13-12
7,500 Miles (12,000 km) Interval Maintenance, 13-11
75,000 Miles (121,000 km) or 30 Month Interval Maintenance, 13-13
90,000 Miles (145,000 km) or 36 Month Interval Maintenance, 13-13

Maintenance Overview, 13-3

Metri-Pack 150 Series Connectors, 8-57
Installation of Metri-Pack 150 Series Connectors, 8-58
Removal of Metri-Pack 150 Series Connectors, 8-57

(Rev. 2004) *All information subject to change without notice.*
6SE483 0401 Copyright © 2004 DETROIT DIESEL CORPORATION

Repair and Replacement, 8-57
Micro-Pack Series Connectors, 8-63
Installation of Micro-Pack Connectors, 8-63
Removal of Micro-Pack Connectors, 8-63
Repair and Replacement, 8-63
Miscalibrated Dipstick, 19-3

N

N3 Electronic Unit Injector, 2-46
Disassembly of N3 Electronic Unit Injector, 2-55
Fuel Injector Tube, 2-60
Installation of Injector Tube and Copper Washer, 2-61
Installation of the N3 Electronic Unit Injector, 2-55
Removal of Injector Tube
Inspection of Injector Tube, 2-60
Removal of N3 Electronic Unit Injector, 2-51
Removal of the Injector Tube, 2-60
Nonfunctional or Sticking Oil Pressure Regulator Valve, 26-17
Oil Pressure Regulator Valve Repair, 26-18
Test Engine with Repaired Oil Pressure Regulator Valve, 26-18

O

Obstruction or Damage to Rocker Cover Breather, 20-3
Rocker Cover Breather Resolution, 20-3
Test Engine with New Wire Mesh Element, 20-4
Oil Cooler (1991 and Later Engines), 3-53
Cleaning, 3-58
Inspection of Oil Cooler, 3-61
Installation of Oil Cooler, 3-62
Removal of Oil Cooler, 3-58
Repair or Replacement, 3-57
Oil Cooler (Pre-1991 Engines), 3-64
Cleaning, 3-68
Inspection of Oil Cooler, 3-70
Installation of Oil Cooler, 3-72
Removal, 3-67
Repair or Replacement, 3-66

 Copyright © 2004 DETROIT DIESEL CORPORATION

Oil Filter, 3-36
Installation of Oil Filter, 3-39
Replacement of Oil Filter, 3-39
Oil Filter Adaptor, 3-40
Assembly of Oil Filter Adaptor, 3-44
Cleaning the Oil Filter Adaptor, 3-43
Inspection of Oil Filter Adaptor, 3-44
Installation of Oil Filter Adaptor, 3-45
Removal of Oil Filter Adaptor, 3-43
Repair or Replacement, 3-42
Oil Level Dipstick Assembly, 3-74
Installation of Oil Dipstick Assembly, 3-78
Removal of Oil Dipstick Assembly, 3-77
Inspection of Oil Dipstick Assembly, 3-77
Repair or Replacement, 3-76
Oil Pan, 3-79
Cleaning, 3-84
Inspection of Oil Pan, 3-84
Installation of Oil Pan, 3-85
Removal of Oil Pan, 3-83
Repair or Replacement, 3-82
Oil Pressure Gauge Line Obstructed, 26-11
Obstructed Oil Pressure Gage Line Repair, 26-11
Test the Engine with Repaired Oil Gage Line, 26-12
Oil Pressure Regulator Valve, 3-23
Assembly of Oil Pressure Regulator Valve, 3-28
Disassembly of Oil Pressure Regulator Valve, 3-26
Inspection of Oil Pressure Regulator Valve, 3-27
Installation of Oil Pressure Regulator Valve, 3-29
Removal of Oil Pressure Regulator Valve, 3-26
Repair or Replacement, 3-25
Oil Pressure Relief Valve, 3-30
Assembly of Oil Pressure Relief Valve, 3-34
Cleaning the Oil Pressure Relief Valve, 3-32
Inspection of Oil Pressure Relief Valve, 3-33
Disassembly of Oil Pressure Relief Valve, 3-32
Installation of Oil Pressure Relief Valve, 3-35

(Rev. 2004) *All information subject to change without notice.*
6SE483 0401 Copyright © 2004 DETROIT DIESEL CORPORATION

Removal and Cleaning, 3-32
Repair or Replacement, 3-31
Oil Pressure Sensor, 2-219
Installation of Oil Pressure Sensor, 2-220
Removal of Oil Pressure Sensor, 2-219
Replacement of the Oil Pressure Sensor, 2-219
Oil Pump, 3-8
Assembly of Oil Pump (1991 and Later Engines), 3-16
Assembly of Oil Pump (Pre-1991 Engines), 3-18
Test Assembled Oil Pump, 3-19
Disassembly of Oil Pump, 3-15
Inspection of Oil Pump, 3-15
Installation of Oil Pump, 3-20
Removal of Oil Pump, 3-14
Repair or Replacement, 3-13
Oil Temperature Sensor, 2-221
Installation of Oil Temperature Sensor, 2-222
Removal of Oil Temperature Sensor, 2-221
Replacement of Oil Temperature Sensor, 2-221
Operating Conditions, 11-12
Overview of Electrical System, 8-3
Overview of Exhaust System, 7-3
Overview of High Pressure Fuel System, 2-257
Overview of Ignition System, 15-3
Overview of Lubricating System, 3-3
Overview of the Low Pressure Natural Gas Fuel System, 2-284

P

Piston and Connecting Rod Assembly, 1-352
Assembly of Piston and Connecting Rod Assembly, 1-361
Disassembly of Piston and Connecting Rod Assembly, 1-359
Inspection of Piston and Connecting Rod Assembly, 1-361
Installation of Piston and Connecting Rod Assembly, 1-365
Removal and Cleaning, 1-354
Repair or Replacement, 1-353
Piston and Piston Ring, 1-314, 1-337

 Copyright © 2004 DETROIT DIESEL CORPORATION

Assembly of Piston and Piston Rings, 1-329, 1-346
Assembly of S60 Diesel Piston Rings, 1-331, 1-348
Assembly of Series 60G Piston Rings, 1-334
Disassembly of Piston and Piston Ring, 1-323, 1-343
Inspection of Piston and Piston Rings, 1-325
Inspection of Piston Assembly and Piston Rings, 1-344
Removal and Cleaning, 1-323, 1-343
Repair or Replacement, 1-322, 1-342

Plugged Fuel Filter(s), 17-19

Plugged Fuel Filter(S)
Plugged Fuel Filter(s) Replacement, 17-20
Test Engine with Replaced Fuel Filters, 17-20

Poor Vehicle Ground, 16-3
Negative Lead Repair, 16-3
Verification of Repair, 16-4

Preparation, 11-3
Air Cleaner, 11-6
Clutch, 11-6
Cooling System, 11-3
Diesel Fuel System, 11-6
Drive Belts, 11-6
Lubrication System, 11-4
Storage Battery, 11-6
Transmission, 11-6
Turbocharger, 11-5

Preparing Engine, 14-3
Extended Storage (More Than 30 Days), 14-5
Marine Gear Storage (More than 30 Days), 14-8
Outdoor Storage (30 Days or Less), 14-8
Outdoor Storage (More Than 30 Days), 14-9
Restoring a Temporarily Stored Engine, 14-5
Temporary Storage (30 Days or Less), 14-4

Preventive Maintenance, 13-28
Closed Crankcase Breather System, 13-28
Coalescing Fuel Filters, 13-28
Coolant, 13-29
Dry-Type Air Cleaner, 13-29

(Rev. 2004) *All information subject to change without notice.*
6SE483 0401 Copyright © 2004 DETROIT DIESEL CORPORATION

Engine Lubricating Oil, 13-29
Engine Lubricating Oil Filters, 13-29
Spark Plugs, 13-30
Thermostat, 13-30
Turbocharger and Wastegate Assembly, 13-29
Valve Lash, 13-28
Probable Cause #1, 29-3
Programmable Read-Only Memory (PROM) DDEC I, 2-205
Installation of PROM, 2-207
Removal of PROM, 2-206
Replacement of the DDEC I PROM, 2-206
Pulse Width Modulated Stepper Motor Valve (PSV), 2-271
Installation of Pulse Width Modulated Stepper Motor Valve, 2-273
Removal of Pulse Width Modulated Stepper Motor Valve, 2-273
Replacement of Pulse Width Modulated Stepper Motor Valve, 2-273

R

Radiator, 4-108
Repair or Replacement, 4-108
Rear Engine Power Take-Off (REPTO) Assembly, 9-8
Rear Engine Power Take-Off (REPTO) Assembly
Cleaning of Rear Engine Power Take-Off Assembly, 9-13
Inspection of Rear Engine Power Take-Off Assembly, 9-13
Installation of Rear Engine Power Take-Off Assembly, 9-13
Removal of Rear Engine Power Take-Off Assembly, 9-10
Repair and Replacement for the Rear Engine Power Take-Off Assembly, 9-8
Recirculation Valve, 6-116
Installation of the Recirculation Valve, 6-117
Removal of the Recirculation Valve, 6-117
Replacement of the Recirculation Valve, 6-117
Restoring an Extended Storage Engine, 14-10
Restore Marine Gear (More than 30 Days), 14-13
Restricted Air Cleaner Element, 21-5, 25-11
Air Filter Element Replacement, 21-5, 25-11
Test the Engine with Replaced Air Filter Element, 21-6, 25-12
Restricted Oil Cooler, 26-15

 Copyright © 2004 DETROIT DIESEL CORPORATION

Oil Cooler Repair, 26-16
Test Engine with Repaired Oil Cooler, 26-16
Restricted or Cracked Charge Air Cooler, 21-7
Air Intake Manifold Repair, 21-8
Test the Engine with Replaced Charge Air Cooler and Air Intake Manifold, 21-8
Charge Air Cooler Replacement, 21-7
Restricted or Cracked Charge Air Cooler or Leaking Intake Manifold, 25-13
Air Intake Manifold Repair, 25-13
Test the Engine with Replaced Charge Air Cooler and Air Intake Manifold, 25-14
Charge Air Cooler Replacement, 25-13
Restrictive Air Filter, 17-25
Air Filter Replacement, 17-25
Test Engine with Replaced Air Filter, 17-26
Ring Gear, 1-304
Installation of Ring Gear, 1-305
Removal and Cleaning, 1-304
Repair or Replacement, 1-304
Rocker Arm Shaft Plugs Missing (New or Rebuilt Engines Only), 26-13
Leaking Rocker Arm Shaft Plug Repair, 26-13
Missing Rocker Arm Shaft Plug Repair, 26-13
Test Engine with Repaired Rocker Shaft Plugs, 26-14
Rocker Cover, 1-126
Disassembly of Rocker Cover, 1-139
Installation of One-Piece Rocker Cover, 1-141
Installation of the Two-Piece Rocker Cover Cap - Diesel Engines Only, 1-146
Installation of the Two-Piece Rocker Cover Cap (Gas Engines with Coil Over Plug Ignition System Only), 1-147
Installation of Two-Piece and Three-Piece Rocker Covers, 1-142
Pre-installation of Rocker Cover, 1-139
Removal and Cleaning, 1-134–1-135, 1-137
Cleaning and Inspection, 1-134
Inspection of Three-Piece Rocker Cover, 1-138
Inspection of Two-Piece Rocker Cover, 1-135
Removal and Precleaning, 1-137
Repair or Replacement, 1-133
Running, 11-8

(Rev. 2004) *All information subject to change without notice.*
6SE483 0401 Copyright © 2004 DETROIT DIESEL CORPORATION

Avoid Unnecessary Engine Idling, 11-10
Cooling System, 11-9
Crankcase, 11-9
Engine Temperature, 11-9
Oil Pressure, 11-8
Turbocharger, 11-10
Warm-up, 11-8
Inspection, 11-8

S

Sea Pro 150/300 Diesel Fuel Processor System (Marine), 2-131
Installation of the Sea Pro 150 or 300 Filter Element, 2-137
Removal of the Sea Pro 150 or 300 Fuel Filter Element, 2-135
Inspection, 2-136
Replacement of the Sea Pro 150 or 300 Filter Element, 2-134
Sea Pro 152 Fuel Filter System (Marine Engine), 2-139
Installation, 2-145
Installation of Sea Pro 152 Fuel Filter Element, 2-142
Priming Sea Pro 152, 2-145
Removal, 2-144
Inspection, 2-144
Replacement of Sea Pro 152 Fuel Filter Element, 2-140
Series 60G Automotive Engine Operating Conditions, 11-18
Series 60G Genset Engine Operating Conditions, 11-16
Spark Plugs, 15-16
Installation of Spark Plug, 15-17
Removal of Spark Plug, 15-16
Cleaning of Spark Plug Terminal, Ceramic Insulation, and Socket Area, 15-16
Inspection of Spark Plug, 15-17
Splicing Guidelines, 8-70
Multiple Broken Wires, 8-73
Shrink Wrap, 8-72
Solder, 8-71
Splicing Tools, 8-70
Straight Leads, 8-70
Three-Wire Splice, 8-74
Starting, 11-7

 Copyright © 2004 DETROIT DIESEL CORPORATION

Stopping, 11-11
Emergency Stopping, 11-11
Storage Battery, 8-26
Installation of Storage Battery, 8-28
Removal and Cleaning, 8-27
Inspection of Storage Battery, 8-27
Replacement of Storage Battery, 8-27
Synchronous Reference Sensor, 2-231
Installation of Synchronous Reference Sensor, 2-233
Removal of Synchronous Reference Sensor, 2-233
Replacement of Synchronous Reference Sensor, 2-233

T

Tachometer Drive, 8-35
Cleaning, 8-38
Inspection of Tachometer Drive, 8-38
Installation of Tachometer Drive, 8-39
Removal of Tachometer Drive Adaptor, 8-38
Repair or Replacement, 8-37
Thermatic Oil Control Valve, 3-46
Installation of Thermatic Oil Control Valve, 3-52
Removal and Cleaning, 3-49
Inspection of Thermatic Oil Control Valve, 3-49
Testing Thermatic Oil Control Valve, 3-50
Repair or Replacement, 3-48
Thermostat, 4-80
Cleaning, 4-85
Draining and Removal, 4-84
Inspection of Thermostats, 4-85
Installation of Thermostat and Seal, 4-88
Repair or Replacement, 4-83
Testing Thermostat, 4-86
Throttle Actuator, 6-128
Cleaning of Throttle Actuator, 6-130
Inspection of Throttle Actuator, 6-130
Test of Throttle Actuator, 6-130

(Rev. 2004) *All information subject to change without notice.*
6SE483 0401 Copyright © 2004 DETROIT DIESEL CORPORATION

Disassembly of Throttle Actuator, 6-130
Installation of Throttle Actuator, 6-131
Removal of Throttle Actuator, 6-130
Reuse or Replacement, 6-130

Thrust Plate Perimeter Seal, 1-443
Installation of Thrust Plate Perimeter Seal, 1-449
Removal of Thrust Plate Perimeter Seal, 1-445
Inspection of Thrust Plate Perimeter Seal Groove, 1-449
Repair or Replacement, 1-444

Timing Reference Sensor, 2-234
Installation of Timing Reference Sensor, 2-235
Removal of Timing Reference Sensor, 2-235
Replacement of Timing Reference Sensor, 2-235

Turbo Boost Pressure Sensor, 2-214
Installation of Turbo Boost Sensor, 2-215
Removal of Turbo Boost Sensor, 2-215
Replacement of Turbo Boost Sensor, 2-214

Turbocharger (Diesel), 6-26
Assembly of the ERG Valve and Actuator Assemblies, 6-55
Assembly of Turbocharger, 6-48
Disassembly, 6-38
Inspection, 6-41
Disassembly of the Actuator and EGR Valve Assembly, 6-54
Cleaning of the EGR Valve and Actuator Assembly, 6-55
Inspection of the EGR Valve and Actuator Assembly, 6-55
EGR Cooler Installation, 6-52
EGR Cooler Removal, 6-50
EGR Delivery Pipe Installation, 6-71
EGR Delivery Pipe Removal, 6-63
EGR Rate Measurement System Installation, 6-73
EGR Rate Measurement System Removal, 6-72
Inspection
Checking Wastegate Calibration, 6-43
Installation of Delivery Pipe Hose, 6-66
Installation of the Speed Sensor, 6-80
Installation of Turbocharger, 6-49

 Copyright © 2004 DETROIT DIESEL CORPORATION

Installation of Wastegate Actuator, 6-45
Setting the Wastegate, 6-46
Removal and Cleaning, 6-36
Removal of Delivery Pipe Hose, 6-65
Removal of the Speed Sensor, 6-78
Removal of Wastegate Actuator, 6-45
Repair or Replacement, 6-34
S-Pipe and EGR Valve Installation, 6-56
S-Pipe and EGR Valve Removal, 6-53
Variable Pressure Output Device (VPOD) Installation, 6-75
Variable Pressure Output Device (VPOD) Removal, 6-74

Turbocharger Series 60 Gas Engines (Genset), 6-82
Assembly of Turbocharger (Series 60G), 6-95
Cleaning and Removal, 6-90
Disassembly of Turbochargers (Series 60G Engine), 6-92
Inspection and Cleaning, 6-93
Installation of Turbocharger (Series 60G), 6-96
Repair or Replacement, 6-89

Turbocharger Series 60 Natural Gas (Automotive) Engine, 6-97
Assembly of Turbocharger Series 60G Automotive Engine, 6-114
Checking Wastegate Calibration, 6-109
Cleaning and Removal, 6-104
Disassembly of Turbochargers (Series 60G Automotive Engine), 6-105
Inspection and Cleaning, 6-107
Installation of Turbocharger Series 60G Automotive Engine, 6-115
Removal and Replacement, 6-111
Repair or Replacement, 6-102
Setting the Wastegate on the Series 60G Automotive Engine, 6-112

V

Valve and Injector Operating Mechanism, 1-64
Installation of Rocker Arm Shaft Assembly, 1-81
Removal of Rocker Arm Assembly, 1-73
Cleaning of Rocker Arm Assemblies, 1-78
Inspection of Rocker Arm Assemblies and Camshaft Lobes, 1-79
Repair or Replacement, 1-71

(Rev. 2004) *All information subject to change without notice.*
6SE483 0401 Copyright © 2004 DETROIT DIESEL CORPORATION

Valve Lash for the Series 60G Engine, 12-27

Valve Lash, Iinjector Height (Timing) and Jake Brake® Lash Adjustments, 12-5
Slave Piston Adjustment (Jake Brake® Lash), 12-19

Valves, Springs, Guides, Inserts, Seals and Rotators, 1-86
Installation of Intake and Exhaust Valve Seat Insert, 1-102
Installation of Valve Guide, 1-108
Installation of Valve, Spring, Seal and Rotator, 1-110
Removal and Cleaning, 1-92, 1-94
Cleaning of Valves and Related Parts, 1-96
Removal of Intake and Exhaust Valve Seat Insert, 1-99
Inspection of Valve, 1-100
Inspection of Valve Guides, 1-101
Inspection of Valve Seat Inserts, 1-101
Inspection of Valve Springs, 1-101
Removal of Valve Guide, 1-97
Repair or Replacement, 1-91

Vehicle Safety, 2-7
Cylinder Safety, 2-8
Fueling Safety, 2-9
Fueling Vehicles, 2-10
Natural Gas Vehicles - The Safe Alternative, 2-7
Safety Standards, 2-8
Safety Training, 2-9

Ventilating System, 3-87
Cleaning the Ventilating System, 3-93
Installation of Ventilating System, 3-94
Removal of Ventilating System, 3-90
Inspection of Ventilating System, 3-93
Repair or Replacement, 3-89

Venting and Leak Checking Procedures, 2-265, 2-296
Leak Checking the Natural Gas Fuel System, 2-267, 2-297
Venting an Inoperable Engine to Relieve Natural Gas Pressure, 2-266, 2-296
Venting an Operable Engine to Relieve Natural Gas Pressure, 2-265, 2-296

 Copyright © 2004 DETROIT DIESEL CORPORATION

W

Water Pump (Front Mounted) (FM), 4-43
Assembly of Front Mounted Water Pump, 4-53
Test Bearing Assembly (FM), 4-55
Assembly of Water Pump (FM), 4-56
Assembly Integrity Test, 4-70
Cleaning of Front Mounted Water Pump, 4-52
Disassembly of Front Mounted Water Pump, 4-47
Inspection of Front Mounted Water Pump, 4-51
Draining and Removal, 4-47
Installation of Front Mounted Water Pump, 4-71
Repair or Replacement, 4-46

Water Pump (Gear Case Mounted - 1991 and Later) (Gcm), 4-11

Water Pump (Gear Case Mounted - 1991 and Later) (GCM)
Assembly of Water Pump (GCM), 4-20, 4-24, 4-40
Assembly Integrity Test, 4-38
Test Bearing Assembly, 4-24
Cleaning of Water Pump (GCM), 4-19
Disassembly of Water Pump (GCM), 4-14
Inspection of Water Pump (GCM), 4-19
Draining and Removal, 4-14
Installation of Water Pump (GCM), 4-40
Repair or Replacement, 4-13

Weather Pack and Metri-Pack 280 Series Connectors, 8-65
Installation of Weather Pack and Metri-Pack 280 Series Connectors, 8-66
Removal of Weather Pack and Metri-Pack 280 Series Connectors, 8-65
Repair and Replacement, 8-65

Winter Storage, 14-14
Restore Marine Engine from Winter Storage, 14-17
Store Marine Engine for Winter, 14-14

Worn or Damaged Valve or Cylinder Kit, 22-6, 20-8, 19-11, 16-28
Worn or Damaged Valve or Cylinder Kit Repair, 22-7, 20-9, 16-29
Test Engine with Repairs Made to Correct Worn or Damaged Valve or Cylinder Kit, 22-7, 20-9

(Rev. 2004) *All information subject to change without notice.*
6SE483 0401 Copyright © 2004 DETROIT DIESEL CORPORATION

Verification of Repair, 16-29
Worn or Damaged Valve(s) or Cylinder Kit(s) Repair, 19-12
Test Engine with Repaired Cylinder Head Valve(s), and Cylinder Kit, 19-12

 Copyright © 2004 DETROIT DIESEL CORPORATION