Wiring Diagrams

DETROIT DIESEL

mtu

Generator Sets

Models:

200–300DSEB
350/400DSE
350/400DSEC
450DSEB

Controllers:
Digital 550
Microprocessor-Plus, 16-Light

DETROIT DIESEL ISO CERTIFIED ORGANIZATION 9001 CORPORATION

MP-6338 9/06d

Product Identification Information

Product identification numbers determine service parts. Record the product identification numbers in the spaces below immediately after unpacking the products so that the numbers are readily available for future reference. Record field-installed kit numbers after installing the kits.

Generator Set Identification Numbers

Record the product identification numbers from the generator set nameplate(s).

Model Designation _____

Specification Number _____

Serial Number _____

Accessory Number	Accessory Description

Controller Identification

Record the controller description from the generator set operation manual, spec sheet, or sales invoice.

Controller Description _____

Engine Identification

Record the product identification information from the engine nameplate.

Manufacturer _____

Model Designation _____

Serial Number _____

Introduction

This manual provides wiring diagrams for the Detroit Diesel-powered generator sets listed on the front cover, equipped with one of the following controllers:

- Digital 550
- Microprocessor-Plus, 16-Light

Information in this publication represents data available at the time of print. The manufacturer of DDC/MTU Power Generation products reserves the right to change this publication and the products represented without notice and without any obligation or liability whatsoever.

Service Assistance

For professional advice on generator set power requirements and conscientious service, please contact your nearest DDC/MTU Power Generation distributor.

- Consult the Yellow Pages under the heading Generators—Electric.
- Visit the DDC/MTU Power Generation website at DDCMTUPowerGeneration.com.
- Look at the labels and stickers on your DDC/MTU Power Generation product or review the appropriate literature or documents included with the product.

Wiring Diagrams

Use the Wiring Diagram Cross-Reference chart to determine the wiring diagram version number for a given model number and spec number. Then find that version number, the controller type, and the alternator type on the Controller Wiring Diagrams Reference chart to determine the wiring diagram numbers for your unit.

Refer to Controller Identification for controller type identification, if necessary. Refer to the generator set nameplate for the alternator type. A wound field alternator is identified with a W as the last digit. Example: Gen. Model 4UA9W.

Wiring Diagram Cross-Reference

Generator Set Model No.	Generator Set Spec No. 50 Hz	Generator Set Spec No. 60 Hz	Version No.
200DSEB	GM19608-GA1S	GM19608-GA1S	1-1
230DSEB	GM13659-GA8S	GM13659-GA7S	2-1 or 2-2
250DSEB	GM13659-GA6S	GM13659-GA5S	2-1 or 2-2
275DSEB	GM13659-GA4S	GM13659-GA3S	2-1 or 2-2
300DSEB	GM13659-GA2S	GM13659-GA1S	2-1 or 2-2
350DSE	GM13280-GA5S	GM13280-GA3S, 4S, 6S	3-1
350DSEC	GM35142-GA8S	GM35142-GA5S, 6S, 7S	4-1 or 4-2
400DSE	GM13280-GA1S	GM13280-GA2S	3-1
400DSEC	GM35142-GA4S	GM35142-GA3S	4-1 or 4-2
450DSEB	GM35142-GA2S	GM35142-GA1S	4-1 or 4-2

200DSEB Controller Wiring Diagrams Reference

Controller Description	Version 1-1	Page
Digital 550		
Point-to-Point Wiring Diagram		
Sheet 1	GM16870A-B	36
Sheet 2	GM16870B-B	37
Wound Field Alternator	GM35944-B	43
Permanent Magnet Alternator	GM35943-A	42
Schematic Diagram		
Sheet 1	ADV-6596A-C	20
Sheet 2	ADV-6596B-C	21
Wound Field Alternator	ADV-6958-A	26
Permanent Magnet Alternator	ADV-6957-	25
Accessory Connections		
Sheet 1	GM16088A-F	34
Sheet 2	GM16088B-F	35
Microprocessor-Plus		
Point-to-Point Wiring Diagram		
Sheet 1	324958A-D	48
Sheet 2	324958B-D	49
Wound Field Alternator	GM35942-H	41
Permanent Magnet Alternator	GM35941-D	40
Schematic Diagram		
Sheet 1	ADV-6509A-D	14
Sheet 2	ADV-6509B-D	15
Wound Field Alternator	ADV-6956-D	24
Permanent Magnet Alternator	ADV-6955-A	23
Accessory Connections		
Sheet 1	328912A-G	50
Sheet 2	328912B-G	51
Alternator Reconnections		
Permanent Magnet Alternator	ADV-5875A-G	9
Wound Field Alternator	ADV-5875B-G	10
Housing Electrical	ADV-7035B-	27

230–300DSEB Controller Wiring Diagrams Reference

Controller Description	Version 2-1	Page	Version 2-2	Page
Digital 550				
Point-to-Point Wiring Diagram				
Sheet 1	GM11502A-G	30	GM11502A-G	30
Sheet 2	GM11502B-G	31	GM11502B-G	31
Wound Field Alternator	GM35944-B	43	GM35944-B	43
Permanent Magnet Alternator	GM35943-A	42	GM35943-A	42
Schematic Diagram				
Sheet 1	ADV-6533A-G	16	ADV-6533A-G	16
Sheet 2	ADV-6533B-G	17	ADV-6533B-G	17
Wound Field Alternator	ADV-6958-A	26	ADV-6958-A	26
Permanent Magnet Alternator	ADV-6957-	25	ADV-6957-	25
Accessory Connections				
Sheet 1	GM16088A-F	34	GM16088A-F	34
Sheet 2	GM16088B-F	35	GM16088B-F	35
Microprocessor-Plus				
Point-to-Point Wiring Diagram				
Sheet 1	343462A-F	53	GM46322A-B	46
Sheet 2	343462B-F	54	GM46322B-B	47
Wound Field Alternator	GM35942-H	41	GM35942-H	41
Permanent Magnet Alternator	GM35941-D	40	GM35941-D	40
Schematic Diagram				
Sheet 1	ADV-6396-F	12	ADV-7116-B	29
Wound Field Alternator	ADV-6956-D	24	ADV-6956-D	24
Permanent Magnet Alternator	ADV-6955-A	23	ADV-6955-A	23
Accessory Connections				
Sheet 1	328912A-G	50	328912A-G	50
Sheet 2	328912B-G	51	328912B-G	51
Alternator Reconnections				
Permanent Magnet Alternator	ADV-5875A-G	9	ADV-5875A-G	9
Wound Field Alternator	ADV-5875B-G	10	ADV-5875B-G	10
Housing Electrical	ADV-7035B-	27	ADV-7035B-	27

Version 2-1 uses digital interface circuit board C-354647.
Version 2-2 uses P22 connector from controller circuit board.

350/400DSE Controller Wiring Diagrams Reference

Controller Description	Version 3-1	Page
Digital 550		
Point-to-Point Wiring Diagram		
Sheet 1	GM11503A-H	32
Sheet 2	GM11503B-H	33
Schematic Diagram		
Sheet 1	ADV-6534A-G	18
Sheet 2	ADV-6534B-G	19
Accessory Connections		
Sheet 1	GM16088A-F	34
Sheet 2	GM16088B-F	35
Microprocessor-Plus		
Point-to-Point Wiring Diagram		
Sheet 1	343577A-K	55
Sheet 2	343577B-K	56
Schematic Diagram		
Sheet 1	ADV-6399-L	13
Accessory Connections		
Sheet 1	328912A-G	50
Sheet 2	328912B-G	51
Sheet 3	328912C-G	52
Alternator Reconnections		
Pilot-Excited Alternator	ADV-5875C-G	11
Housing Electrical	ADV-7035B-	27

350/400DSEC and 450DSEB Controller Wiring Diagrams Reference

Controller Description	Version 4-1	Page	Version 4-2	Page
Digital 550				
Point-to-Point Wiring Diagram				
Sheet 1	GM11503A-H	32	GM11503A-H	32
Sheet 2	GM11503B-H	33	GM11503B-H	33
Schematic Diagram				
Sheet 1	ADV-6534A-G	18	ADV-6534A-G	18
Sheet 2	ADV-6534B-G	19	ADV-6534B-G	19
Accessory Connections				
Sheet 1	GM16088A-F	34	GM16088A-F	34
Sheet 2	GM16088B-F	35	GM16088B-F	35
Microprocessor-Plus				
Point-to-Point Wiring Diagram				
Sheet 1	GM35344A-A	38	GM46319A-B	44
Sheet 2	GM35344B-A	39	GM46319B-B	45
Schematic Diagram	ADV-6950-A	22	ADV-7115-B	28
Accessory Connections				
Sheet 1	328912A-G	50	328912A-G	50
Sheet 2	328912B-G	51	328912B-G	51
Sheet 3	328912C-G	52	328912C-G	52
Alternator Reconnections				
Pilot-Excited Alternator	ADV-5875C-G	11	ADV-5875C-G	11
Housing Electrical	ADV-7035B-	27	ADV-7035B-	27

Version 4-1 uses digital interface circuit board C-354647.
Version 4-2 uses P22 connector from controller circuit board.

Controller Identification

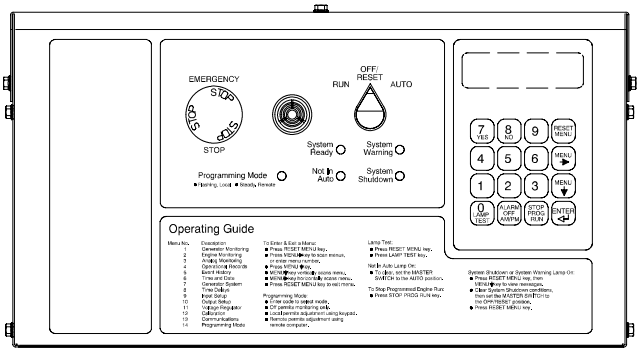

Digital 550 Controller

- Audiovisual annunciation with NFPA 110 Level 1 capability.
- Programmable microprocessor logic and digital display features.
- Alternator safeguard circuit protection.
- 12- or 24-volt engine electrical system capability.
- Remote start, remote annunciation, and remote communication options.

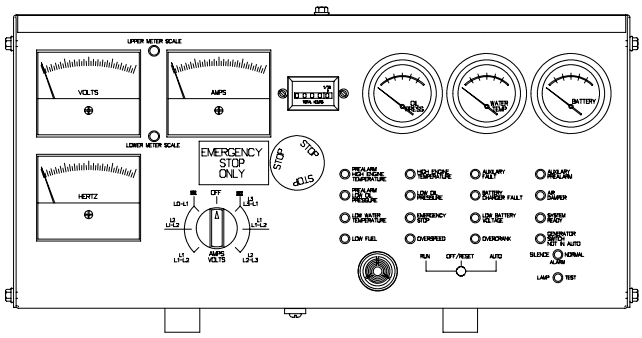

Microprocessor-Plus, 16-Light Controller

- Audiovisual annunciation with NFPA 110 Level 1 capability.
- Microprocessor logic, AC meters, and engine gauge features.
- 12- or 24-volt engine electrical system capability.
- Remote start, prime power, and remote annunciation options.

REV	DATE	REVISION	BY	M F
E	5-27-04	(A-1,-2) SHEET 1-3 WAS 1-2, 20-60 KW WOUND EXCITER FIELD		
		ALTERNATORS ADDED TO DRAWING DESCRIPTION; (A & C-2,-3,-4)		
		TB3 WAS TB2 (6 PLACES); & SEE SHEETS 2 & 3 [71832]	DFS	
F	9-2-04	SEE SHEET 2 OF 3. [72955]	RAC	
G	12-12-05	(A-2) 10-20 KW ADDED, SEE SHEET 3 [76798]	SAM	

12 LEAD ALTERNATOR, 3 WIRE, SINGLE PHASE

60 HZ: 100/200V
60 HZ: 120/240V
50 HZ: 100/200V
50 HZ: 110/220V

SOME SETS NOT RATED FOR SINGLE PHASE – SEE MANUALS

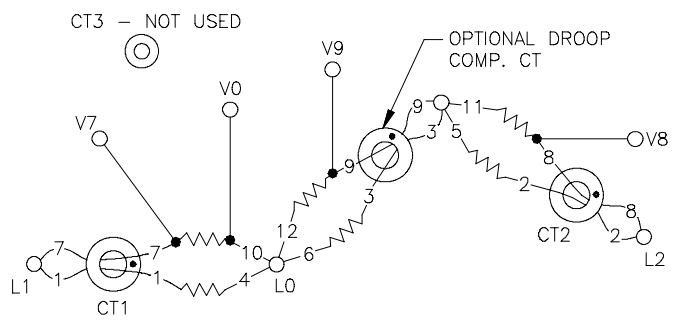

TB3 UP V7 LO METER SCALE LAMP JUMPER

12 LEAD ALTERNATOR, 3 WIRE, SINGLE PHASE

60 HZ: 240V
50 HZ: 220V
(MARINE ONLY)

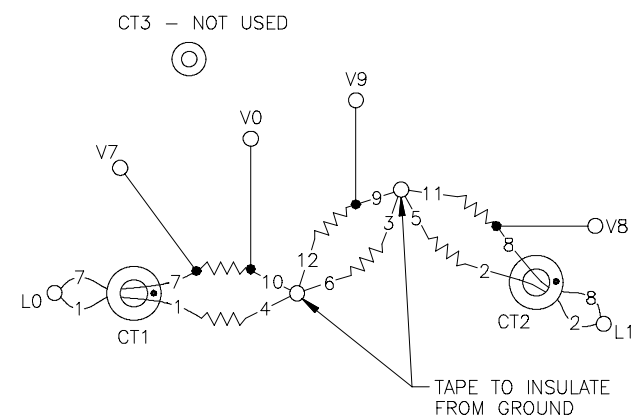

TB3 UP V7 LO METER SCALE LAMP JUMPER

12 LEAD ALTERNATOR, 4 WIRE, DELTA

60 HZ: 120/240V
50 HZ: 110/220V

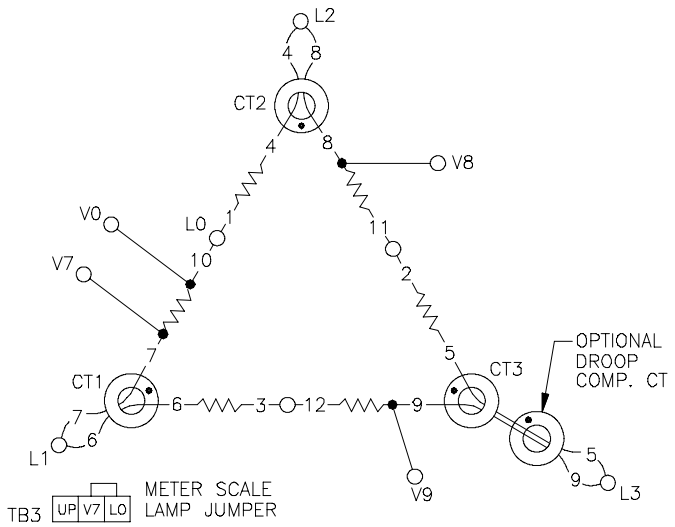

TB3 UP V7 LO METER SCALE LAMP JUMPER

12 LEAD ALTERNATOR, 4 WIRE, LOW WYE

60 HZ: 120/208V
60 HZ: 127/220V
60 HZ: 139/240V
50 HZ: 110/190V
50 HZ: 115/200V
50 HZ: 120/208V

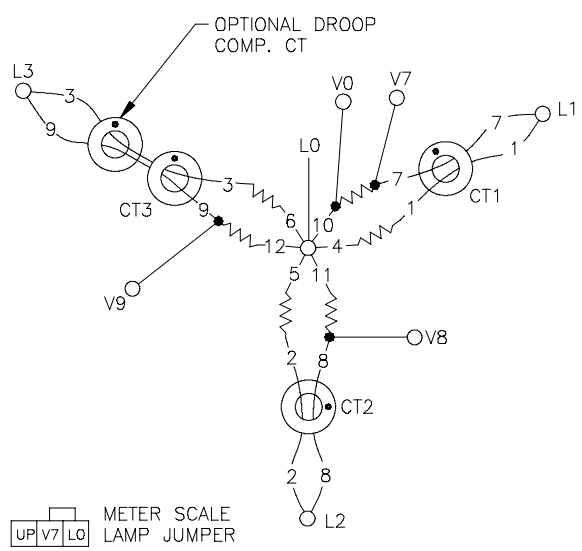

TB3 UP V7 LO METER SCALE LAMP JUMPER

12 LEAD ALTERNATOR, 4 WIRE, HI WYE

60 HZ: 220/380V
60 HZ: 240/416V
60 HZ: 277/480V
50 HZ: 220/380V
50 HZ: 230/400V
50 HZ: 240/416V

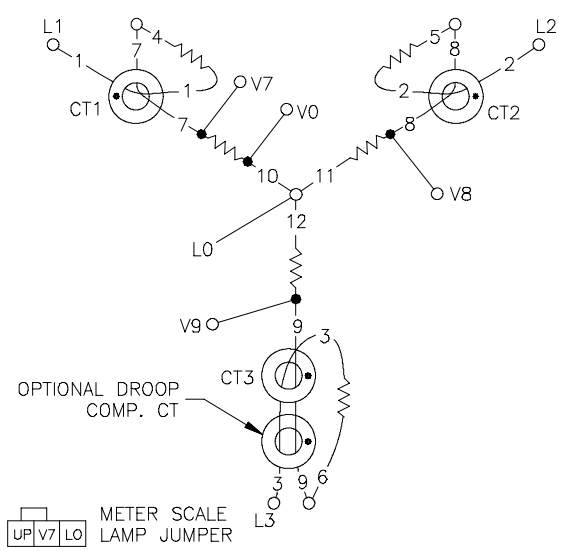

TB3 UP V7 LO METER SCALE LAMP JUMPER

6 LEAD ALTERNATOR, 4 WIRE, WYE

60 HZ: 347/600V

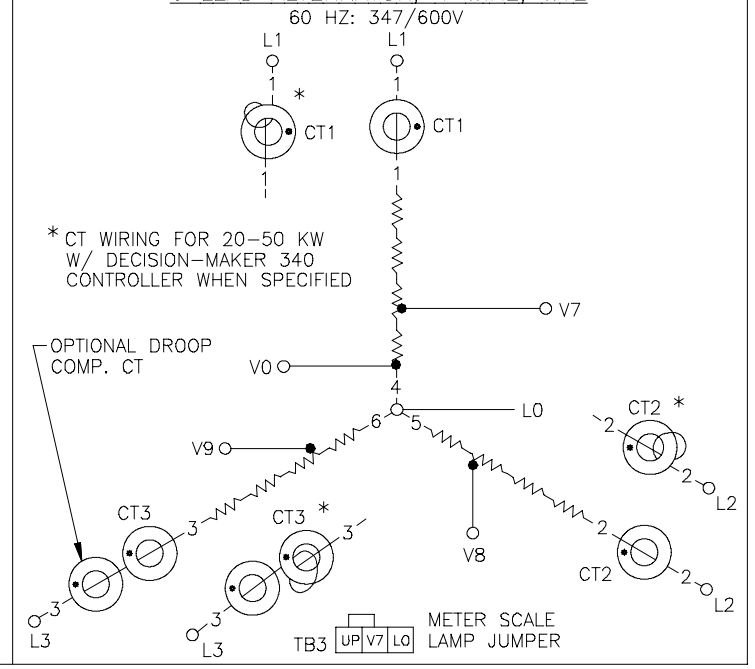

TB3 UP V7 LO METER SCALE LAMP JUMPER

NOTES:
CURRENT TRANSFORMER DOT OR "H1" TOWARD GENERATOR.
CURRENT TRANSFORMERS NOT USED ON ALL SETS.

PHASE ROTATION

A	B	C
L1	L2	L3

UNLESS OTHERWISE SPECIFIED – 1) DIMENSIONS ARE IN INCHES 2) TOLERANCES ARE:
.XXX ± .010 ANGLES ± 1/2°
.XX ± .030 SURFACE FINISH
.X ± .060 √ MAX.
FRACTIONS ±

APPROVALS		DATE
DRAWN	DFS	7-28-92
CHECKED	TLK	6-23-99
APPROVED	JMH	6-25-99

TITLE DIAGRAM, 3 ø RECONNECTABLE

SCALE	NONE	CAD NO.	ADV5875A.DWG	SHEET	1-3
PLOTTED		DWG. NO.	ADV-5875		C G

REV	DATE	REVISION	BY	M F
E	5-27-04	(A-1,-2) SHEET 2-3 WAS 2-2, 60-300 KW WOUND EXCITER FIELD		
		ALTERNATORS WAS MARATHON ALTERNATORS IN DRAWING		
		DESCRIPTION; MARATHON WIRING DIAGRAMS MOVED TO SHEET 3;		
		(A & C-2,-3,-4) TB3 WAS TB2 (6 PLACES) & SEE SHEETS		
		1 AND 3 [71832]	DFS	
F	9-2-04	(A-2) 60 (I.M.S.)-300 KW WAS 60-300 KW. [72955]	RAC	
G	12-12-05	SEE SHEET 3 [76798]	SAM	

12 LEAD ALTERNATOR, 3 WIRE, SINGLE PHASE

60 HZ: 100/200V
60 HZ: 120/240V
50 HZ: 100/200V
50 HZ: 110/220V

SOME SETS NOT RATED FOR SINGLE PHASE – SEE MANUALS

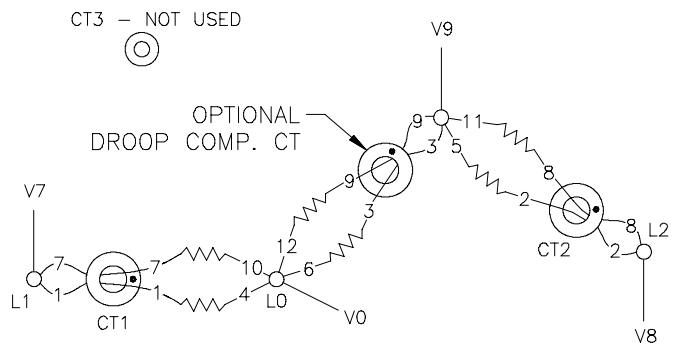

TB3 UP V7 LO METER SCALE LAMP JUMPER

12 LEAD ALTERNATOR, 3 WIRE, SINGLE PHASE

60 HZ: 240V
50 HZ: 220V
(MARINE ONLY)

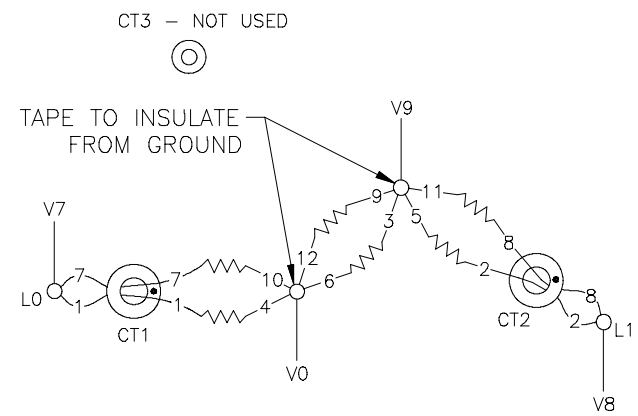

TB3 UP V7 LO METER SCALE LAMP JUMPER

12 LEAD ALTERNATOR, 4 WIRE, DELTA

60 HZ: 120/240V
50 HZ: 110/220V

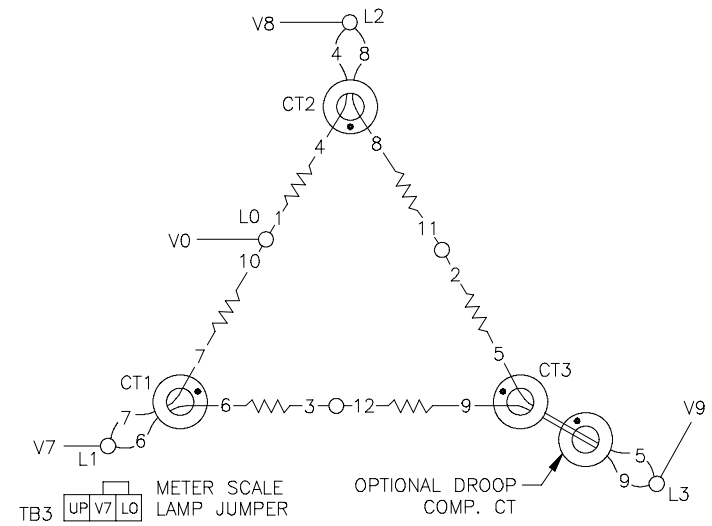

TB3 UP V7 LO METER SCALE LAMP JUMPER

12 LEAD ALTERNATOR, 4 WIRE, LOW WYE

60 HZ: 120/208V
60 HZ: 127/220V
60 HZ: 139/240V
50 HZ: 110/190V
50 HZ: 115/200V
50 HZ: 120/208V

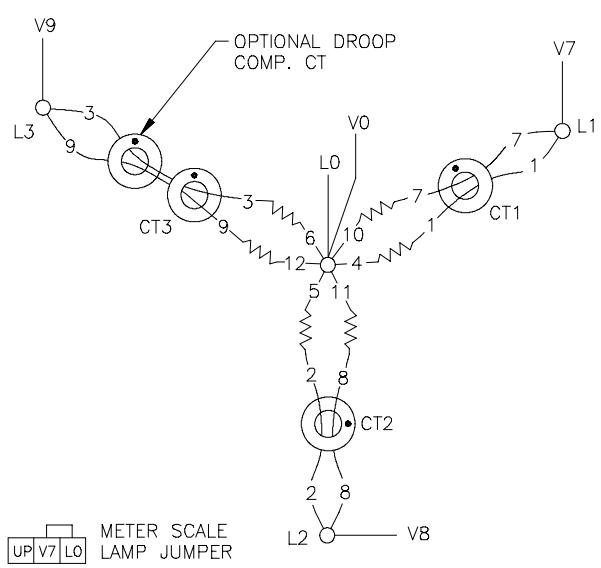

TB3 UP V7 LO METER SCALE LAMP JUMPER

12 LEAD ALTERNATOR, 4 WIRE, HI WYE

60 HZ: 220/380V
60 HZ: 240/416V
60 HZ: 277/480V
50 HZ: 220/380V
50 HZ: 230/400V
50 HZ: 240/416V

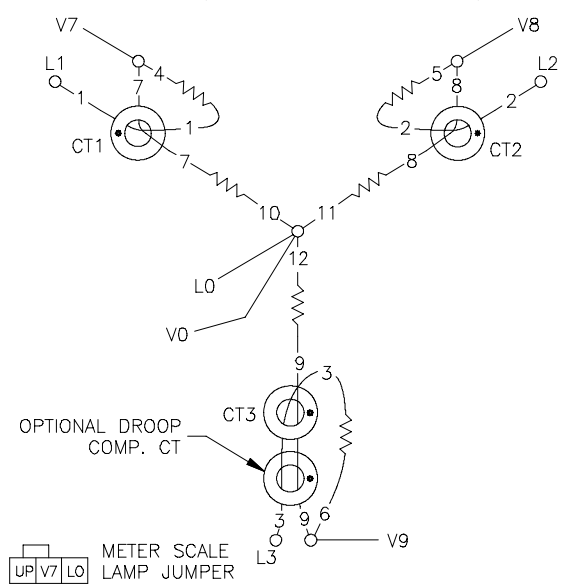

TB3 UP V7 LO METER SCALE LAMP JUMPER

6 LEAD ALTERNATOR, 4 WIRE, WYE

60 HZ: 347/600V

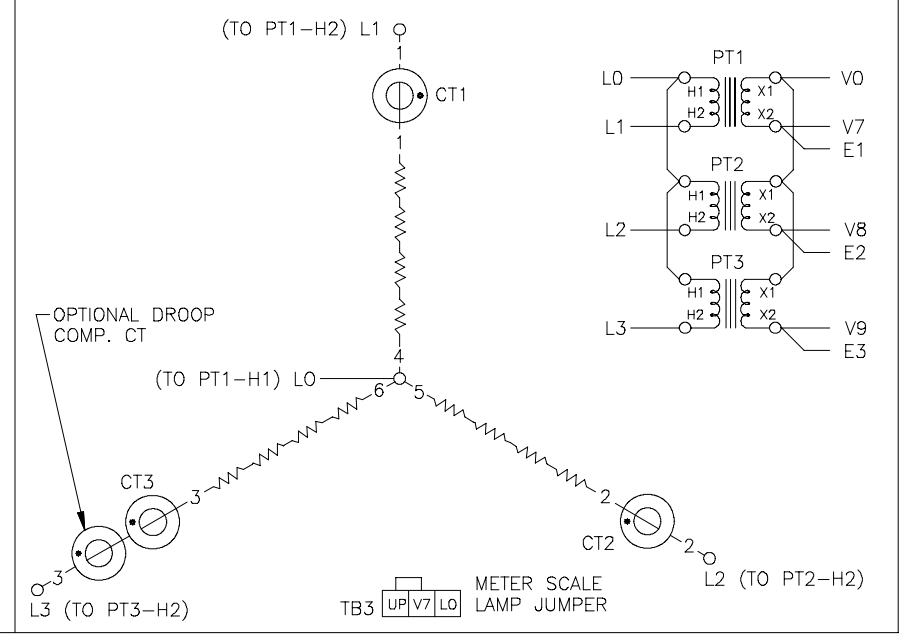

TB3 UP V7 LO METER SCALE LAMP JUMPER

NOTES:
CURRENT TRANSFORMER DOT OR "H1" TOWARD GENERATOR.
CURRENT TRANSFORMERS NOT USED ON ALL SETS.

PHASE ROTATION

A	B	C
L1	L2	L3

UNLESS OTHERWISE SPECIFIED – 1) DIMENSIONS ARE IN INCHES 2) TOLERANCES ARE:
.XXX ± .010 ANGLES ± 1/2°
.XX ± .030 SURFACE FINISH
.X ± .060 √ MAX.
FRACTIONS ±

APPROVALS		DATE
DRAWN	LDS	8-25-98
CHECKED	TLK	6-23-99
APPROVED	JMH	6-25-99

TITLE DIAGRAM, 3 ø RECONNECTABLE

SCALE	CAD NO.	SHEET
NONE	ADV5875B.DWG	2-3
PLOTTED	DWG. NO. ADV-5875	C G

REV	DATE	REVISION	BY	M F
E	5-27-04	(A-1) THIS SHEET ADDED & MARATHON WIRING DIAGRAMS		
		TRANSFERRED FROM SHEET 2-2; (A & C-2,-3,-4) TB3 WAS		
		TB2 (6 PLACES) & SEE SHEET 1 AND 2 [71832]	DFS	
F	9-2-04	SEE SHEET 2 OF 3. [72955]	RAC	
G	12-12-05	(B-2) 6 LEAD ALTS: 3 PHASE PT DIAGRAM ADDED [7698]	SAM	

GENERATOR CONNECTIONS

12 LEAD ALTERNATOR, 3 WIRE, SINGLE PHASE

60 HZ: 100/200V
60 HZ: 120/240V
50 HZ: 100/200V
50 HZ: 110/220V

SOME SETS NOT RATED FOR SINGLE PHASE – SEE MANUALS

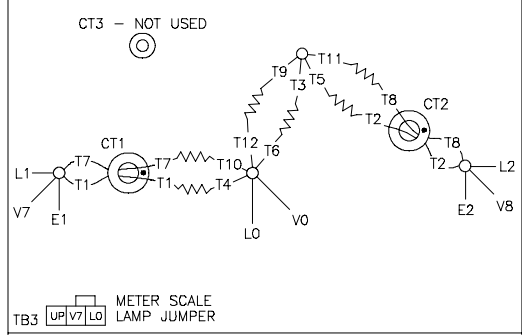

12 LEAD ALTERNATOR, 4 WIRE, DELTA

60 HZ: 120/240V
50 HZ: 110/220V

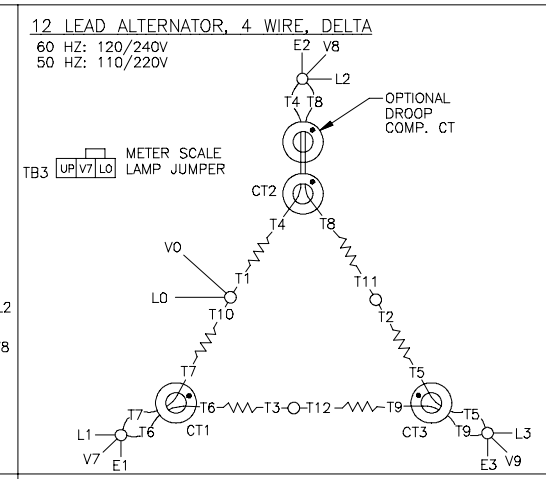

10 OR 12 LEAD ALTERNATOR, 4 WIRE, LOW WYE

60 HZ: 120/208V
60 HZ: 127/220V
60 HZ: 139/240V

50 HZ: 110/190V
50 HZ: 115/200V
50 HZ: 120/208V

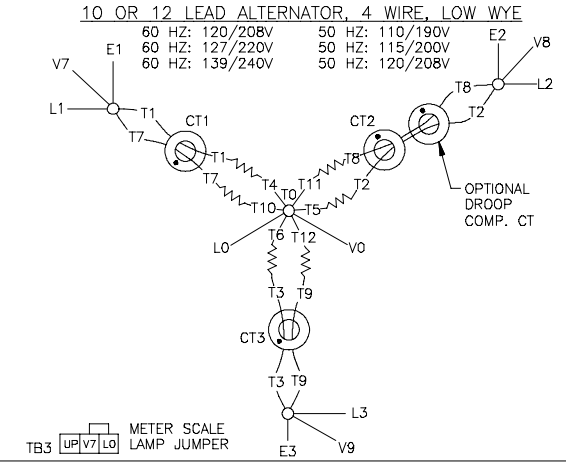

10 OR 12 LEAD ALTERNATOR, 4 WIRE, HI WYE

60 HZ: 220/380V
60 HZ: 240/416V
60 HZ: 277/480V

50 HZ: 220/380V
50 HZ: 230/400V
50 HZ: 240/416V

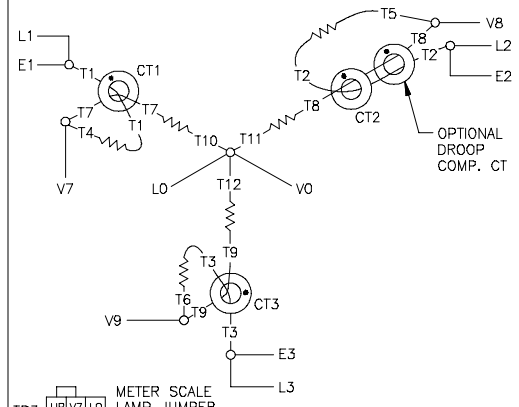

4 LEAD ALTERNATOR, 4 WIRE, WYE

60 HZ: 220/380V
60 HZ: 240/416V
60 HZ: 277/480V
60 HZ: 347/600V

50 HZ: 220/380V
50 HZ: 230/400V
50 HZ: 240/416V

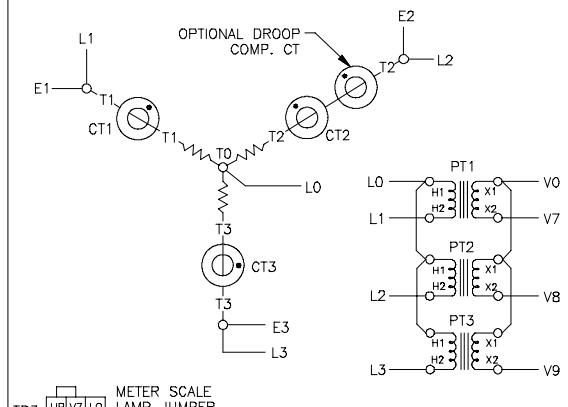

6 LEAD ALTERNATOR, 4 WIRE, WYE (MARATHON)

60 HZ: 2400/4160V
50 HZ: 1905/3300V
50 HZ: 3810/6600V

6 LEAD ALTERNATOR, 4 WIRE, WYE (BAYLOR)

60 HZ: 4160/7200V
60 HZ: 7200/12470V
60 HZ: 7620/13200V
60 HZ: 7970/13800V
50 HZ: 6350/11000V

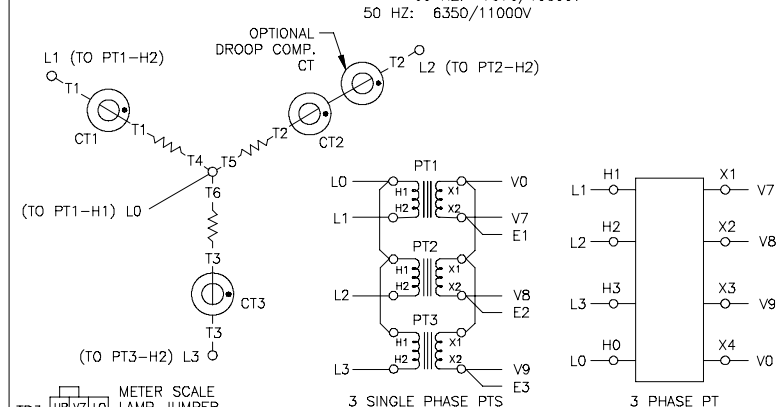

PHASE ROTATION

A B C
L1 L2 L3

NOTES:

ON 10 LEAD GENERATORS, LEADS T10, T11 & T12 ARE ALL BROUGHT OUT TOGETHER AND LABELED "T0".

CURRENT TRANSFORMER DOT OR "H1" TOWARD GENERATOR.
CURRENT TRANSFORMERS NOT USED ON ALL SETS.

UNLESS OTHERWISE SPECIFIED –
1) DIMENSIONS ARE IN INCHES
2) TOLERANCES ARE:
.XXX ± .010 ANGLES ± 1/2°
.XX ± .030 SURFACE FINISH
.X ± .060 √ MAX.
FRACTIONS ±

APPROVALS		DATE
DRAWN	DFS	5-27-04
CHECKED	JS	5-27-04
APPROVED	JS	5-27-04

TITLE: DIAGRAM, 3ø RECONNECTABLE

SCALE: NONE | CAD NO.: ADV5875C.DWG | SHEET: 3-3
PLOTTED | DWG. NO.: ADV-5875 | D

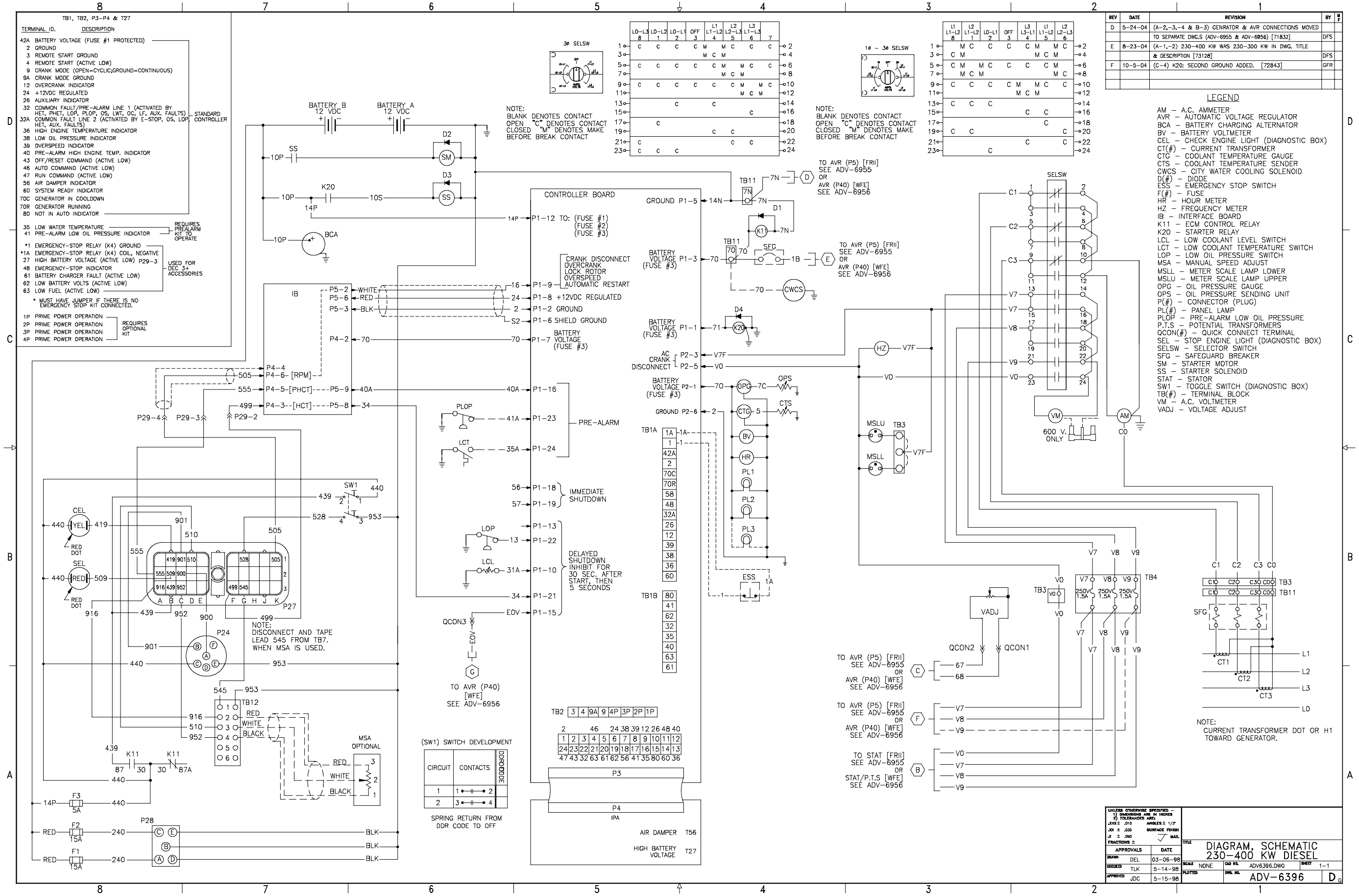
TB1, TB2, P3-P4 & T27
TERMINAL ID. DESCRIPTION
42A BATTERY VOLTAGE (FUSE #1 PROTECTED)
2 GROUND
3 REMOTE START GROUND
4 REMOTE START (ACTIVE LOW)
9 CRANK MODE (OPEN=CYCLIC;GROUND=CONTINUOUS)
9A CRANK MODE GROUND
12 OVERCRANK INDICATOR
24 +12VDC REGULATED
26 AUXILIARY INDICATOR
32 COMMON FAULT/PRE-ALARM LINE 1 (ACTIVATED BY HET, PHET, LOP, PLOP, OS, LWT, OC, LF, AUX. FAULTS)
32A COMMON FAULT LINE 2 (ACTIVATED BY E-STOP, OS, LOP, HET, AUX. FAULTS)
36 HIGH ENGINE TEMPERATURE INDICATOR
38 LOW OIL PRESSURE INDICATOR
39 OVERSPEED INDICATOR
40 PRE-ALARM HIGH ENGINE TEMP. INDICATOR
43 OFF/RESET COMMAND (ACTIVE LOW)
46 AUTO COMMAND (ACTIVE LOW)
47 RUN COMMAND (ACTIVE LOW)
56 AIR DAMPER INDICATOR
60 SYSTEM READY INDICATOR
70C GENERATOR IN COOLDOWN
70R GENERATOR RUNNING
80 NOT IN AUTO INDICATOR
STANDARD CONTROLLER
35 LOW WATER TEMPERATURE
41 PRE-ALARM LOW OIL PRESSURE INDICATOR
REQUIRES PREALARM KIT TO OPERATE
*1 EMERGENCY-STOP RELAY (K4) GROUND
*1A EMERGENCY-STOP RELAY (K4) COIL, NEGATIVE
27 HIGH BATTERY VOLTAGE (ACTIVE LOW) P29-3
48 EMERGENCY-STOP INDICATOR
61 BATTERY CHARGER FAULT (ACTIVE LOW)
62 LOW BATTERY VOLTS (ACTIVE LOW)
63 LOW FUEL (ACTIVE LOW)
USED FOR DEC 3+ ACCESSORIES
* MUST HAVE JUMPER IF THERE IS NO EMERGENCY STOP KIT CONNECTED.
1P PRIME POWER OPERATION
2P PRIME POWER OPERATION
3P PRIME POWER OPERATION
4P PRIME POWER OPERATION
REQUIRES OPTIONAL KIT
BATTERY B 12 VDC
BATTERY A 12 VDC
SS
D2
SM
D3
K20
10P
10S
14P
BCA
CONTROLLER BOARD
P1-12 TO: (FUSE #1) (FUSE #2) (FUSE #3)
CRANK DISCONNECT OVERCRANK LOCK ROTOR OVERSPEED AUTOMATIC RESTART
P1-8 +12VDC REGULATED
P1-2 GROUND
P1-6 SHIELD GROUND
P1-7 BATTERY VOLTAGE (FUSE #3)
IB
P5-2 WHITE
P5-6 RED
P5-3 BLK
P4-2
P4-4
P4-6- [RPM]
P4-5-[PHCT]
P4-3--[HCT]
P5-9
P5-8
40A
34
P1-16
PLOP
41A
P1-23
LCT
35A
P1-24
PRE-ALARM
56
57
P1-18
P1-19
IMMEDIATE SHUTDOWN
LOP
13
P1-13
P1-22
LCL
31A
P1-10
P1-21
EOV
P1-15
DELAYED SHUTDOWN INHIBIT FOR 30 SEC. AFTER START, THEN 5 SECONDS
QCON3
EOV
G
TO AVR (P40) [WFE] SEE ADV-6956
TB2 3 4 9A 9 4P 3P 2P 1P
P3
P4
IPA
AIR DAMPER T56
HIGH BATTERY VOLTAGE T27
GROUND P1-5
14N
TB11
7N
D1
K1
BATTERY VOLTAGE P1-3 (FUSE #3)
70
SEG
1B
CWCS
TO AVR (P5) [FRII] SEE ADV-6955 OR AVR (P40) [WFE] SEE ADV-6956
D4
K20
BATTERY VOLTAGE P1-1 (FUSE #3)
71
AC CRANK DISCONNECT
P2-3 V7F
P2-5 V0
BATTERY VOLTAGE P2-1 (FUSE #3)
OPG
OPS
CTG
CTS
GROUND P2-6
BV
HR
PL1
PL2
PL3
ESS
TB1A
TB1B
(SW1) SWITCH DEVELOPMENT
CIRCUIT CONTACTS
SPRING RETURN FROM DDR CODE TO OFF
HZ
MSLU
MSLL
TB3
VM
600 V. ONLY
AM
CO
SELSW
C1 C2 C3 V7 V8 V9 V0
TB4
250V 1.5A
VADJ
QCON2
QCON1
TO AVR (P5) [FRII] SEE ADV-6955 OR AVR (P40) [WFE] SEE ADV-6956
TO STAT [FRII] SEE ADV-6955 OR STAT/P.T.S [WFE] SEE ADV-6956
C0
TB3
TB11
SFG
CT1
CT2
CT3
L1
L2
L3
L0
NOTE: CURRENT TRANSFORMER DOT OR H1 TOWARD GENERATOR.
CEL
YEL
SEL
RED
RED DOT
SW1
440
439
528
953
901
510
505
555
419
509
916
952
900
499
P27
P24
NOTE: DISCONNECT AND TAPE LEAD 545 FROM TB7. WHEN MSA IS USED.
545
TB12
MSA OPTIONAL
K11
87
30
87A
F3 5A
F2 15A
F1 15A
240
P28
BLK
P29-4
P29-3
P29-2
3Ø SELSW
1Ø - 3Ø SELSW
NOTE: BLANK DENOTES CONTACT OPEN "C" DENOTES CONTACT CLOSED "M" DENOTES MAKE BEFORE BREAK CONTACT
LEGEND
AM – A.C. AMMETER
AVR – AUTOMATIC VOLTAGE REGULATOR
BCA – BATTERY CHARGING ALTERNATOR
BV – BATTERY VOLTMETER
CEL – CHECK ENGINE LIGHT (DIAGNOSTIC BOX)
CT(#) – CURRENT TRANSFORMER
CTG – COOLANT TEMPERATURE GAUGE
CTS – COOLANT TEMPERATURE SENDER
CWCS – CITY WATER COOLING SOLENOID
D(#) – DIODE
ESS – EMERGENCY STOP SWITCH
F(#) – FUSE
HR – HOUR METER
HZ – FREQUENCY METER
IB – INTERFACE BOARD
K11 – ECM CONTROL RELAY
K20 – STARTER RELAY
LCL – LOW COOLANT LEVEL SWITCH
LCT – LOW COOLANT TEMPERATURE SWITCH
LOP – LOW OIL PRESSURE SWITCH
MSA – MANUAL SPEED ADJUST
MSLL – METER SCALE LAMP LOWER
MSLU – METER SCALE LAMP UPPER
OPG – OIL PRESSURE GAUGE
OPS – OIL PRESSURE SENDING UNIT
P(#) – CONNECTOR (PLUG)
PL(#) – PANEL LAMP
PLOP – PRE-ALARM LOW OIL PRESSURE
P.T.S – POTENTIAL TRANSFORMERS
QCON(#) – QUICK CONNECT TERMINAL
SEL – STOP ENGINE LIGHT (DIAGNOSTIC BOX)
SELSW – SELECTOR SWITCH
SFG – SAFEGUARD BREAKER
SM – STARTER MOTOR
SS – STARTER SOLENOID
STAT – STATOR
SW1 – TOGGLE SWITCH (DIAGNOSTIC BOX)
TB(#) – TERMINAL BLOCK
VM – A.C. VOLTMETER
VADJ – VOLTAGE ADJUST
REV DATE REVISION BY
D 5-24-04 (A-2,-3,-4 & B-3) GENRATOR & AVR CONNECTIONS MOVED
TO SEPARATE DWG.S (ADV-6955 & ADV-6956) [71832] DFS
E 8-23-04 (A-1,-2) 230-400 KW WAS 230-300 KW IN DWG. TITLE
& DESCRIPTION [73128] DFS
F 10-5-04 (C-4) K20: SECOND GROUND ADDED. [72843] GFR
UNLESS OTHERWISE SPECIFIED – 1) DIMENSIONS ARE IN INCHES 2) TOLERANCES ARE:
.XXX ± .010 ANGLES ± 1/2°
.XX ± .030 SURFACE FINISH
.X ± .060 MAX.
FRACTIONS ±
APPROVALS DATE
DRAWN DEL 03-06-98
CHECKED TLK 5-14-98
APPROVED JDC 5-15-98
TITLE DIAGRAM, SCHEMATIC 230-400 KW DIESEL
SCALE NONE
CAD FILE ADV6396.DWG
SHEET 1-1
PLOTTED
DWG. NO. ADV-6396
D

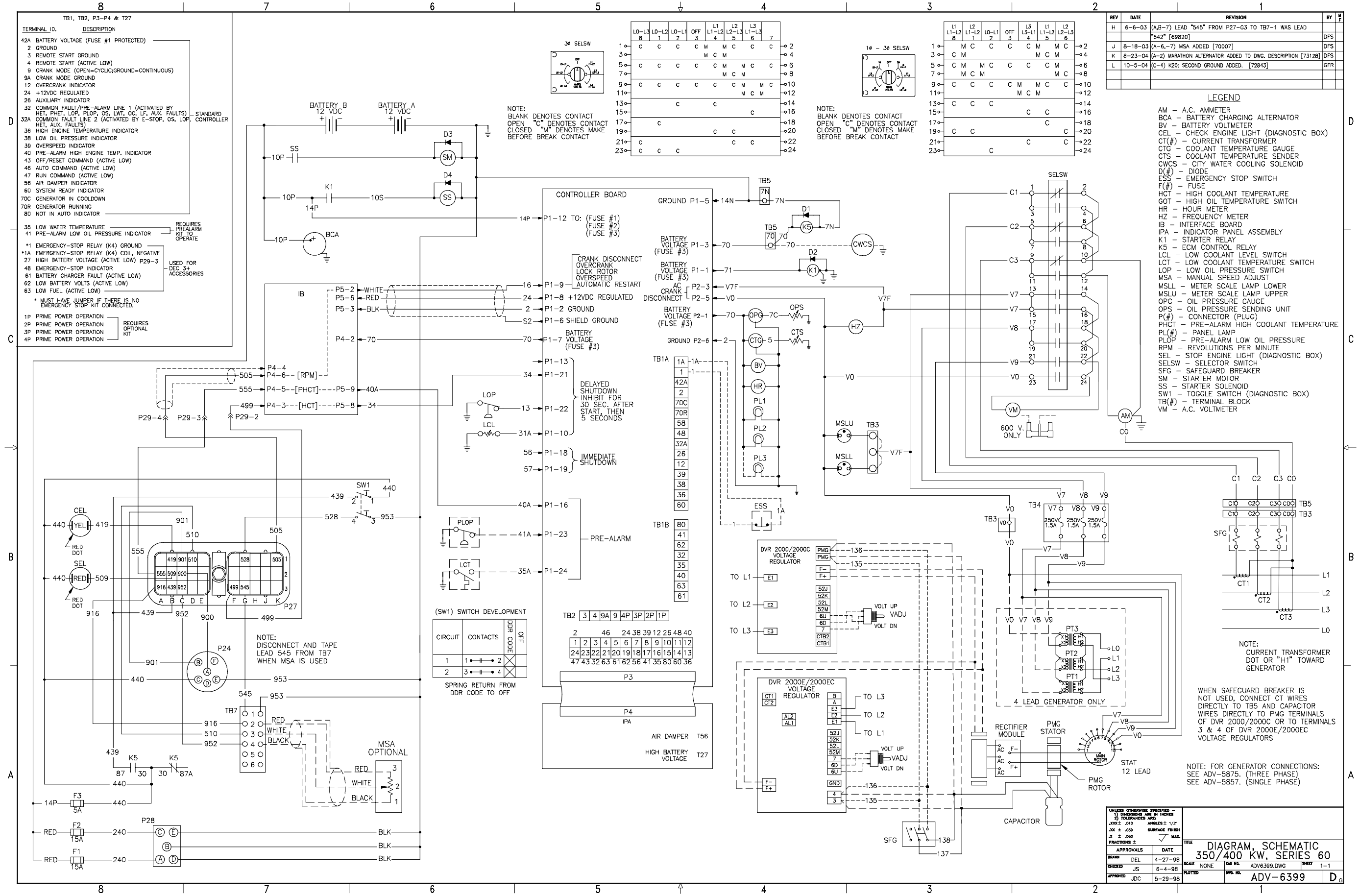

REV	DATE	REVISION	BY	M F
H	6-6-03	(A,B-7) LEAD "545" FROM P27-G3 TO TB7-1 WAS LEAD "542" [69820]	DFS	
J	8-18-03	(A-6,-7) MSA ADDED [70007]	DFS	
K	8-23-04	(A-2) MARATHON ALTERNATOR ADDED TO DWG. DESCRIPTION [73128]	DFS	
L	10-5-04	(C-4) K20: SECOND GROUND ADDED. [72843]	GFR	

LEGEND

AM – A.C. AMMETER
BCA – BATTERY CHARGING ALTERNATOR
BV – BATTERY VOLTMETER
CEL – CHECK ENGINE LIGHT (DIAGNOSTIC BOX)
CT(#) – CURRENT TRANSFORMER
CTG – COOLANT TEMPERATURE GAUGE
CTS – COOLANT TEMPERATURE SENDER
CWCS – CITY WATER COOLING SOLENOID
D(#) – DIODE
ESS – EMERGENCY STOP SWITCH
F(#) – FUSE
HCT – HIGH COOLANT TEMPERATURE
GOT – HIGH OIL TEMPERATURE SWITCH
HR – HOUR METER
HZ – FREQUENCY METER
IB – INTERFACE BOARD
IPA – INDICATOR PANEL ASSEMBLY
K1 – STARTER RELAY
K5 – ECM CONTROL RELAY
LCL – LOW COOLANT LEVEL SWITCH
LCT – LOW COOLANT TEMPERATURE SWITCH
LOP – LOW OIL PRESSURE SWITCH
MSA – MANUAL SPEED ADJUST
MSLL – METER SCALE LAMP LOWER
MSLU – METER SCALE LAMP UPPER
OPG – OIL PRESSURE GAUGE
OPS – OIL PRESSURE SENDING UNIT
P(#) – CONNECTOR (PLUG)
PHCT – PRE-ALARM HIGH COOLANT TEMPERATURE
PL(#) – PANEL LAMP
PLOP – PRE-ALARM LOW OIL PRESSURE
RPM – REVOLUTIONS PER MINUTE
SEL – STOP ENGINE LIGHT (DIAGNOSTIC BOX)
SELSW – SELECTOR SWITCH
SFG – SAFEGUARD BREAKER
SM – STARTER MOTOR
SS – STARTER SOLENOID
SW1 – TOGGLE SWITCH (DIAGNOSTIC BOX)
TB(#) – TERMINAL BLOCK
VM – A.C. VOLTMETER

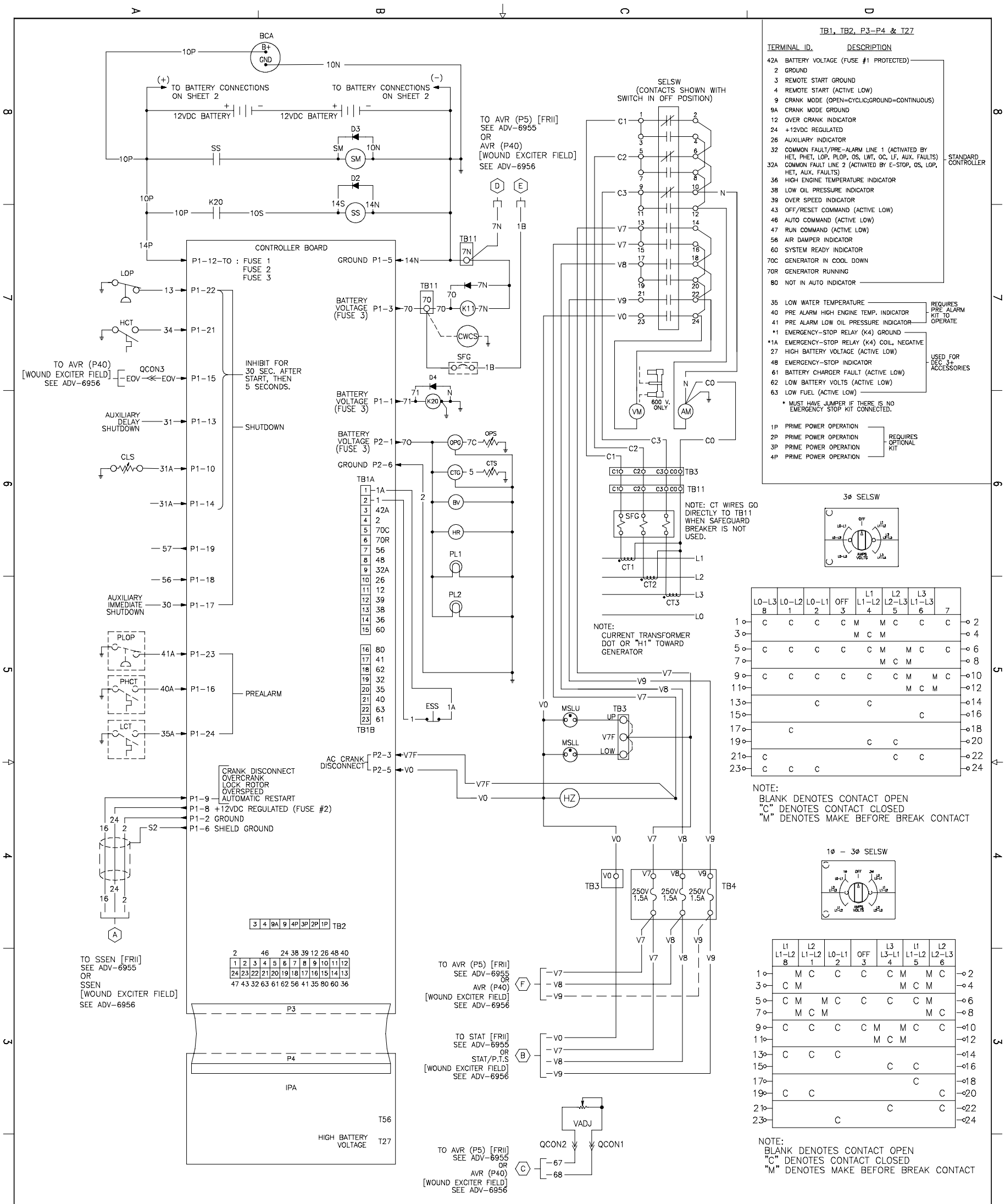

LEGEND

AM – A.C. AMMETER
AIRTS – AIR TEMPERATURE SENSOR
AVR – AUTOMATIC VOLTAGE REGULATOR
BAPS – BAROMETRIC AIR PRESSURE SENSOR
BCA – BATTERY CHARGING ALTERNATOR
BV – BATTERY VOLTMETER
CEL – CHECK ENGINE LIGHT
CLS – COOLANT LEVEL SENDER
CT(#) – CURRENT TRANSFORMER
CTG – COOLANT TEMPERATURE GAUGE
CTS – COOLANT TEMPERATURE SENDER
CWCS – CITY WATER COOLING SOLENOID
D(#) – DIODE
ECM – ENGINE CONTROL MODULE
ESS – EMERGENCY STOP SWITCH
F(#) – FUSE
HCT – HIGH COOLANT TEMPERATURE SWITCH
HR – HOUR METER
HZ – FREQUENCY METER
K6 – ECM POWER RELAY
K11 – ECM CONTROL RELAY
K20 – CRANK RELAY
LCT – LOW COOLANT TEMPERATURE SWITCH
LOP – LOW OIL PRESSURE SWITCH
MSLL – METER SCALE LAMP LOWER
MSLU – METER SCALE LAMP UPPER
OPG – OIL PRESSURE GAUGE
OPS – OIL PRESSURE SENDER
P(#) – PLUG
PHCT – PRELIMINARY HIGH COOLANT TEMPERATURE SWITCH
PL(#) – PANEL LAMP
PLOP – PRELIMINARY LOW OIL PRESSURE SWITCH
QCON(#) – QUICK CONNECT TERMINAL
SEL – STOP ENGINE LIGHT
SELSW – SELECTOR SWITCH
SFG – SAFEGUARD BREAKER
SLB – STATIONARY LED BOARD
SM – STARTER MOTOR
SS – STARTER SOLENOID
SSEN – SPEED SENSOR
SW1 – TOGGLE SWITCH, 2 POSITION SPRING RETURN
TB1A, TB1B, TB2 – CONTROLLER BOARD TERMINAL BLOCK
TB3 – CT/METER SCALE TERMINAL BLOCK
TB4 – A.C. FUSEBLOCK
TB11 – SAFEGUARD BREAKER TERMINAL BLOCK
TB12 – JUNCTION BOX TERMINAL BLOCK
VADJ – VOLTAGE ADJUST
VM – A.C. VOLTMETER
⏚ – ENGINE BLOCK GROUND

REV	DATE	REVISION	BY
–	2-17-99	NEW DRAWING [57583]	JS
A	5-25-99	(A-8) 10P TO BCA B+ WAS TO GND & 10N TO GND WAS TO B+; (A-2) AIRTS- AIR TEMPERATURE SENSOR WAS ATS-. [58842]	LRH
B	1-23-02	DRAWING UPDATED TO CURRENT STANDARDS [64467]	JS
C	5-24-04	(A,B,C-2,-3,-4) GENERATOR & AVR CONNECTIONS MOVED TO SEPARATE DWG.S (ADV-6955 & ADV-6956). [71832]	DFS
D	10-5-04	(B-6) K20: SECOND GROUND ADDED. [72843]	GFR

UNLESS OTHERWISE SPECIFIED: 1) DIMENSIONS ARE IN INCHES 2) TOLERANCES ARE: .XX ± .010 .XXX ± .030 ANGLES ± 1/2° SURFACE FINISH 125 MAX. FRACTIONS ±

APPROVALS	DATE
DRAWN JS	2-17-99
CHECKED CWW	3-1-99
APPROVED TLK	3-1-99

TITLE: DIAGRAM, SCHEMATIC 200 KW SERIES 40

CAD NO. ADV6509A.DWG | SHEET 1-2 | SCALE / / / | PLOTTED | DWG. NO. ADV-6509 | D

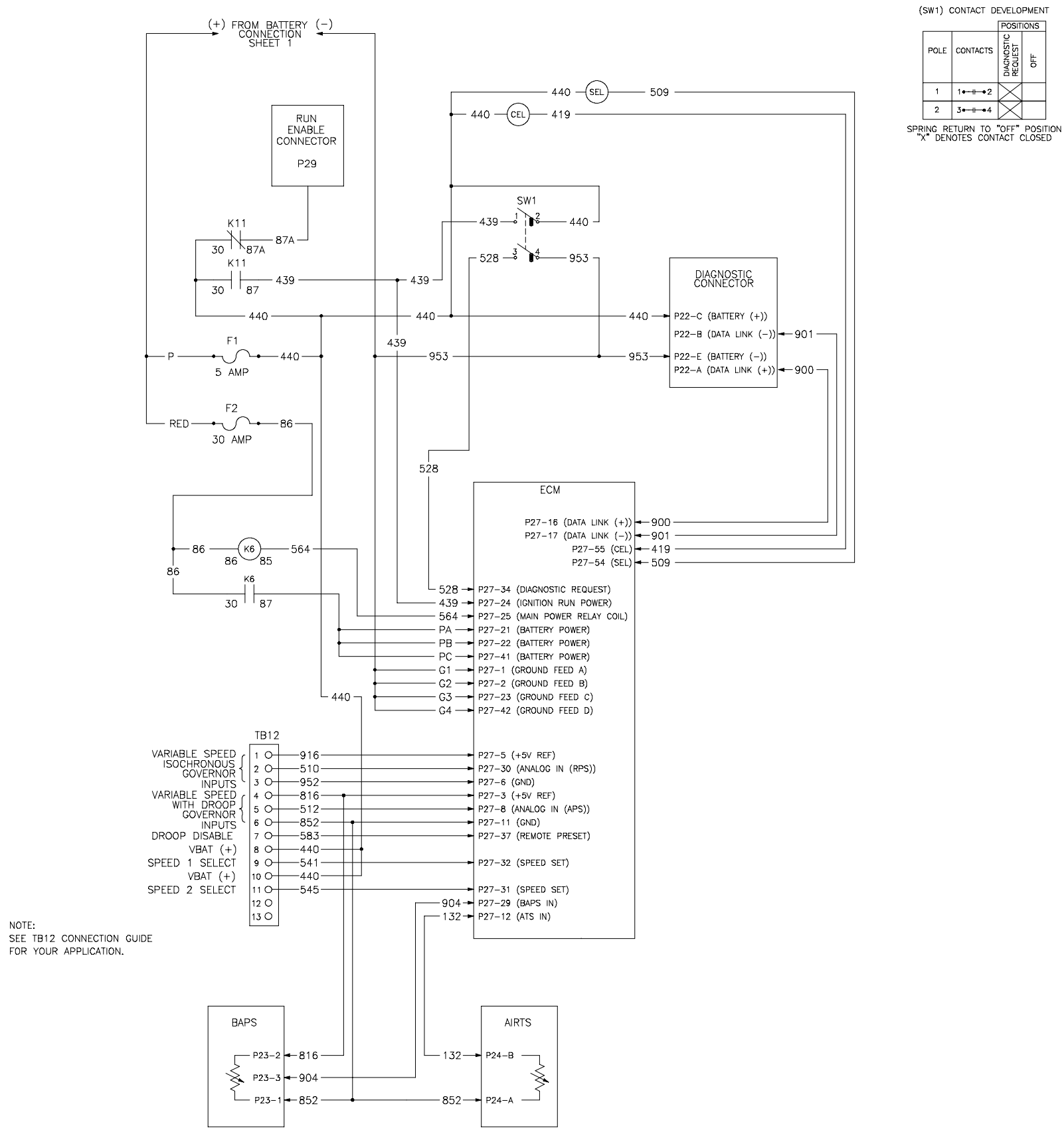

NOTE:
SEE TB12 CONNECTION GUIDE FOR YOUR APPLICATION.

(SW1) CONTACT DEVELOPMENT

POLE	CONTACTS	POSITIONS: DIAGNOSTIC REQUEST	POSITIONS: OFF
1	1 ⊸⊣⊢⊸ 2	X	
2	3 ⊸⊣⊢⊸ 4	X	

SPRING RETURN TO "OFF" POSITION
"X" DENOTES CONTACT CLOSED

TB12 CONNECTION GUIDE

	TB12 TERMINAL POSITION	ECM #1 SWITCHABLE SPEED 1500 RPM	ECM #1 SWITCHABLE SPEED 1800 RPM	ECM #2 1500 RPM ISOCHRONOUS OR VARIABLE SPEED GOVERNOR 1500 ISOCH.	ECM #2 VSG ISOCH.	ECM #2 VSG W/DROOP	ECM #3 1800 RPM ISOCHRONOUS OR VARIABLE SPEED GOVERNOR 1800 ISOCH.	ECM #3 VSG ISOCH.	ECM #3 VSG W/DROOP
VARIABLE	1				LOAD SHARE +5V			LOAD SHARE +5V	
SPEED	2				LOAD SHARE SIGNAL			LOAD SHARE SIGNAL	
ISOCH.	3				LOAD SHARE GND			LOAD SHARE GND	
VARIABLE	4					SPEED POT PIN 1			SPEED POT PIN 1
SPEED	5					SPEED POT PIN 2 (WIPER)			SPEED POT PIN 2 (WIPER)
W/DROOP	6					SPEED POT PIN 3			SPEED POT PIN 3
DROOP	7	JUMPER	JUMPER	JUMPER	JUMPER		JUMPER	JUMPER	
DISABLE	8	7 TO 8	7 TO 8	7 TO 8	7 TO 8		7 TO 8	7 TO 8	
SPEED 1	9	JUMPER		JUMPER					
VBAT	10	9 TO 10	JUMPER	9 TO 10			JUMPER		
SPEED 2	11		10 TO 11				10 TO 11		
N/C	12								
N/C	13								

REV	DATE	REVISION	BY
–	2-17-99	NEW DRAWING [57583]	JS
A	5-25-98	(C-4) AIRTS WAS ATS; (B-7) K5 ADDED 2 PLACES. [58842]	LRH
B	1-23-02	(D-8) SW1 CONTACT DEVELOPMENT CHART ADDED [64467]	JS
C	5-24-04	SEE SHEET 1 [71832]	DFS
D	10-5-04	SEE SHEET 1 OF 2. [72843]	GFR

UNLESS OTHERWISE SPECIFIED:
1) DIMENSIONS ARE IN INCHES
2) TOLERANCES ARE:
.XXX ± .010 ANGLES ± 1/2°
.XX ± .030 SURFACE FINISH
.X ± .060 MAX.
FRACTIONS ±

APPROVALS		DATE
DRAWN	JS	2-17-99
CHECKED	CWW	3-1-99
APPROVED	TLK	3-1-99

TITLE: DIAGRAM, SCHEMATIC 200 KW, SERIES 40

SCALE: / / / | CAD NO. ADV6509BL.DWG | SHEET 2-2
PLOTTED | DWG. NO. ADV-6509 | D

REV	DATE	REVISION	BY	M F
E	5-20-04	(A-2,-3,-4) GENERATOR CONNECTIONS MOVED TO SEPARATE		
		DRAWINGS (ADV-6957 & ADV-6958); (D-3,-7) ACRONYMS		
		ADDED TO DIODES [71832]	DFS	
F	8-23-04	(A-1,-2) 230-400 KW WAS 230-300 KW IN DWG. TITLE &		
		DESCRIPTION [73128]	DFS	
G	10-5-04	(D-3) K20: SECOND GROUND ADDED. [72843]	GFR	

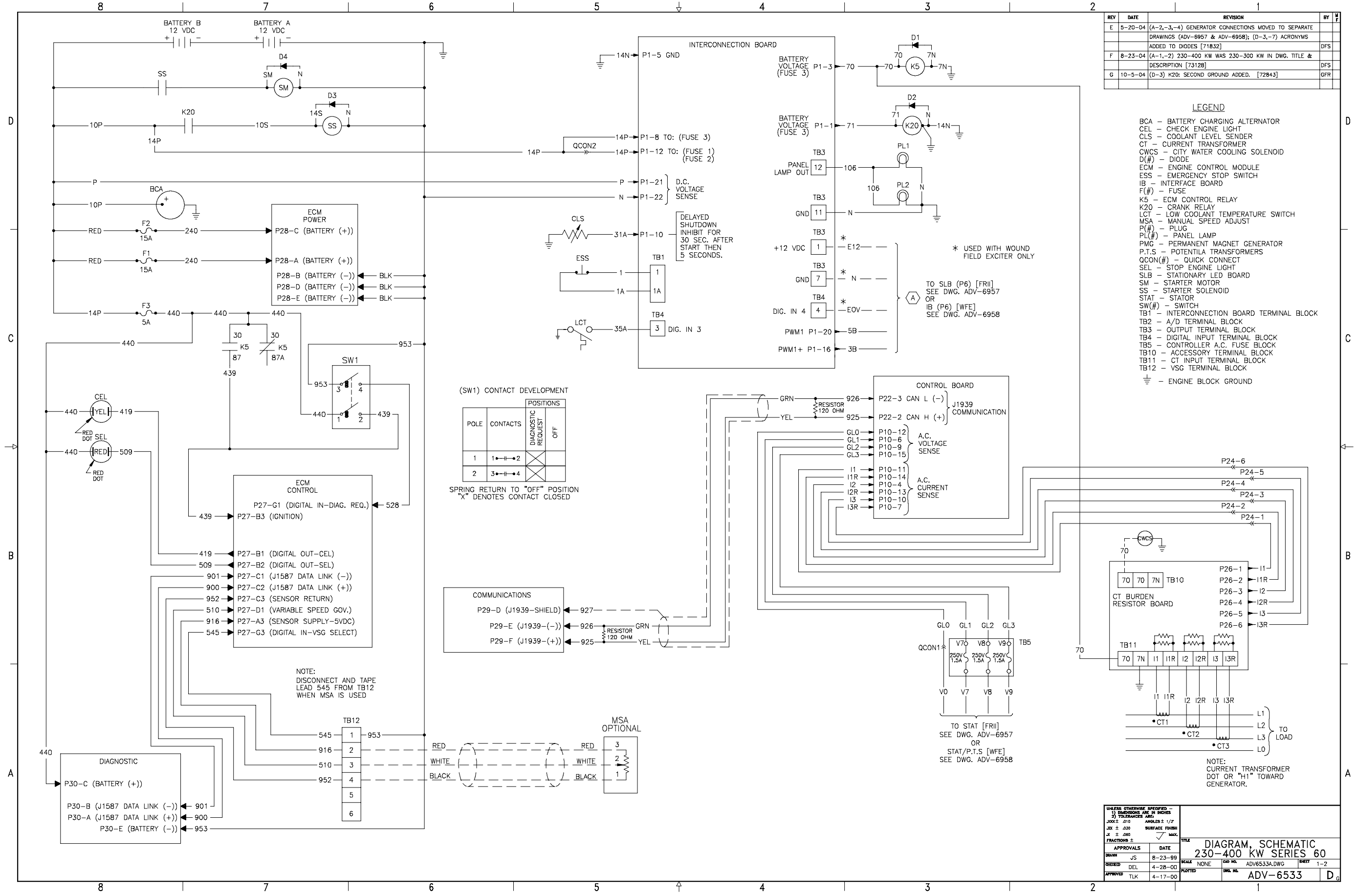

LEGEND

BCA – BATTERY CHARGING ALTERNATOR
CEL – CHECK ENGINE LIGHT
CLS – COOLANT LEVEL SENDER
CT – CURRENT TRANSFORMER
CWCS – CITY WATER COOLING SOLENOID
D(#) – DIODE
ECM – ENGINE CONTROL MODULE
ESS – EMERGENCY STOP SWITCH
IB – INTERFACE BOARD
F(#) – FUSE
K5 – ECM CONTROL RELAY
K20 – CRANK RELAY
LCT – LOW COOLANT TEMPERATURE SWITCH
MSA – MANUAL SPEED ADJUST
P(#) – PLUG
PL(#) – PANEL LAMP
PMG – PERMANENT MAGNET GENERATOR
P.T.S – POTENTILA TRANSFORMERS
QCON(#) – QUICK CONNECT
SEL – STOP ENGINE LIGHT
SLB – STATIONARY LED BOARD
SM – STARTER MOTOR
SS – STARTER SOLENOID
STAT – STATOR
SW(#) – SWITCH
TB1 – INTERCONNECTION BOARD TERMINAL BLOCK
TB2 – A/D TERMINAL BLOCK
TB3 – OUTPUT TERMINAL BLOCK
TB4 – DIGITAL INPUT TERMINAL BLOCK
TB5 – CONTROLLER A.C. FUSE BLOCK
TB10 – ACCESSORY TERMINAL BLOCK
TB11 – CT INPUT TERMINAL BLOCK
TB12 – VSG TERMINAL BLOCK
⏚ – ENGINE BLOCK GROUND

UNLESS OTHERWISE SPECIFIED –
1) DIMENSIONS ARE IN INCHES
2) TOLERANCES ARE:
.XXX ± .010 ANGLES ± 1/2°
.XX ± .030 SURFACE FINISH
.X ± .060 √ MAX.
FRACTIONS ±

APPROVALS		DATE
DRAWN	JS	8-23-99
CHECKED	DEL	4-28-00
APPROVED	TLK	4-17-00

TITLE DIAGRAM, SCHEMATIC 230-400 KW SERIES 60
SCALE NONE CAD NO. ADV6533A.DWG SHEET 1-2
PLOTTED DWG. NO. ADV-6533 D

REV	DATE	REVISION	BY	M F
E	5-20-04	SEE SHEET 1 [71832]	DFS	
F	8-23-04	(A-1,-2) 230-400 KW WAS 230-300 KW IN DWG. TITLE &		
		DESCRIPTION [73128]	DFS	
G	10-5-04	SEE SHEET 1 OF 2. [72843]	GFR	

INTERCONNECT BOARD

TB1 INPUT CONNECTIONS
TB1-1 REMOTE START (3)
TB1-2 REMOTE START (4)
TB1-3 EMERGENCY STOP GROUND (1)
TB1-4 EMERGENCY STOP (1A)

TB2 ANALOG INPUT CONNECTIONS
TB2-1 ANALOG CH1
TB2-2 ANALOG CH1(+)
TB2-3 ANALOG CH2
TB2-4 ANALOG CH2(+)
TB2-5 ANALOG CH3
TB2-6 ANALOG CH3(+)
TB2-7 ANALOG CH4
TB2-8 ANALOG CH4(+)
TB2-9 ANALOG CH5
TB2-10 ANALOG CH5(+)
TB2-11 ANALOG CH6
TB2-12 ANALOG CH6(+)
TB2-13 ANALOG CH7
TB2-14 ANALOG CH7(+)
TB2-15 N/C
TB2-16 ANALOG CH1(-)
TB2-17 ANALOG CH1 SHIELD GROUND
TB2-18 ANALOG CH2(-)
TB2-19 ANALOG CH2 SHIELD GROUND
TB2-20 ANALOG CH3(-)
TB2-21 ANALOG CH3 SHIELD GROUND
TB2-22 ANALOG CH4(-)
TB2-23 ANALOG CH4 SHIELD GROUND
TB2-24 ANALOG CH5(-)
TB2-25 ANALOG CH5 SHIELD GROUND
TB2-26 ANALOG CH6(-)
TB2-27 ANALOG CH6 SHIELD GROUND
TB2-28 ANALOG CH7(-)
TB2-29 ANALOG CH7 SHIELD GROUND
TB2-30 N/C

TB4 DIGITAL INPUT CONNECTIONS
TB4-1 DIGITAL INPUT 1
TB4-2 DIGITAL INPUT 2
TB4-3 DIGITAL INPUT 3
TB4-4 DIGITAL INPUT 4
TB4-5 DIGITAL INPUT 5
TB4-6 DIGITAL INPUT 6
TB4-7 DIGITAL INPUT 7
TB4-8 DIGITAL INPUT 8
TB4-9 DIGITAL INPUT 9
TB4-10 DIGITAL INPUT 10
TB4-11 DIGITAL INPUT 11
TB4-12 DIGITAL INPUT 12
TB4-13 DIGITAL INPUT 13
TB4-14 DIGITAL INPUT 14
TB4-15 DIGITAL INPUT 15
TB4-16 DIGITAL INPUT 16
TB4-17 DIGITAL INPUT 17
TB4-18 DIGITAL INPUT 18
TB4-19 DIGITAL INPUT 19
TB4-20 DIGITAL INPUT 20
TB4-21 DIGITAL INPUT 21
TB4-22 COMMON DIGITAL INPUT RETURN
TB4-23 COMMON DIGITAL INPUT RETURN
TB4-24 COMMON DIGITAL INPUT RETURN
TB4-25 COMMON DIGITAL INPUT RETURN
TB4-26 COMMON DIGITAL INPUT RETURN
TB4-27 COMMON DIGITAL INPUT RETURN
TB4-28 COMMON DIGITAL INPUT RETURN
TB4-29 COMMON DIGITAL INPUT RETURN
TB4-30 COMMON DIGITAL INPUT RETURN
TB4-31 COMMON DIGITAL INPUT RETURN
TB4-32 COMMON DIGITAL INPUT RETURN
TB4-33 COMMON DIGITAL INPUT RETURN
TB4-34 COMMON DIGITAL INPUT RETURN
TB4-35 COMMON DIGITAL INPUT RETURN
TB4-36 COMMON DIGITAL INPUT RETURN
TB4-37 COMMON DIGITAL INPUT RETURN
TB4-38 COMMON DIGITAL INPUT RETURN
TB4-39 COMMON DIGITAL INPUT RETURN
TB4-40 COMMON DIGITAL INPUT RETURN
TB4-41 COMMON DIGITAL INPUT RETURN
TB4-42 COMMON DIGITAL INPUT RETURN

TB3 OUTPUT CONNECTIONS
TB3-1 +12 VDC (OEM USE ONLY)
TB3-2 +12 VDC (OEM USE ONLY)
TB3-3 +12 VDC (OEM USE ONLY)
TB3-4 FUSED BATTERY(+) (42A) (5 AMP)
TB3-5 FUSED BATTERY(+) (42A) (5 AMP)
TB3-6 FUSED BATTERY(+) (42A) (5 AMP)
TB3-7 GROUND
TB3-8 GROUND
TB3-9 GROUND
TB3-10 GROUND
TB3-11 GROUND
TB3-12 PANEL LAMP OUTPUT

P1 ENGINE CONNECTIONS
P1-1 ENGINE CRANK (71)
P1-2 SHIELD 1 GROUND
P1-3 ENGINE RUN (70)
P1-4 ENGINE CRANK (71)
P1-5 ENGINE BLOCK GROUND (14N)
P1-6 SHIELD 2 GROUND
P1-7 ENGINE RUN (70)
P1-8 BATTERY(+) (14P)
P1-9 SHIELD GROUND
P1-10 LOW COOLANT LEVEL PTC (31A)
P1-11 N/C
P1-12 BATTERY(+) (14P)
P1-13 MAGNETIC PICKUP INPUT 1
P1-14 N/C
P1-15 N/C
P1-16 PWM1(+)
P1-17 MAGNETIC PICKUP INPUT 2
P1-18 N/C
P1-19 N/C
P1-20 PWM1
P1-21 BATTERY(+) SENSE (P)
P1-22 BATTERY(-) SENSE (N)
P1-23 PWM2
P1-24 PWM2(+)

P23 OUTPUT CONNECTIONS
P23-1 DIGITAL OUTPUT 29
P23-2 DIGITAL OUTPUT 28
P23-3 DIGITAL OUTPUT 30
P23-4 DIGITAL OUTPUT 31
P23-5 GROUND
P23-6 DIGITAL OUTPUT 21
P23-7 DIGITAL OUTPUT 24
P23-8 DIGITAL OUTPUT 22
P23-9 FUSED BATTERY(+) (42A) (5 AMP)
P23-10 DIGITAL OUTPUT 23
P23-11 DIGITAL OUTPUT 25
P23-12 DIGITAL OUTPUT 26
P23-13 DIGITAL OUTPUT 4
P23-14 DIGITAL OUTPUT 14
P23-15 DIGITAL OUTPUT 27
P23-16 DIGITAL OUTPUT 15
P23-17 DIGITAL OUTPUT 5
P23-18 N/C
P23-19 DIGITAL OUTPUT 20
P23-20 DIGITAL OUTPUT 18
P23-21 DIGITAL OUTPUT 3
P23-22 DIGITAL OUTPUT 16
P23-23 DIGITAL OUTPUT 8
P23-24 DIGITAL OUTPUT 7
P23-25 DIGITAL OUPTUT 1
P23-26 N/C
P23-27 DIGITAL OUTPUT 9
P23-28 DIGITAL OUTPUT 17
P23-29 DIGITAL OUTPUT 6
P23-30 N/C
P23-31 DIGITAL OUTPUT 11
P23-32 DIGITAL OUTPUT 19
P23-33 DIGITAL OUTPUT 12
P23-34 DIGITAL OUTPUT 10
P23-35 DIGITAL OUPUT 2
P23-36 DIGITAL OUTPUT 13

MAIN LOGIC BOARD

P13 MODEM POWER CONNECTIONS
P13-1 GROUND
P13-2 +5 VD

P18 RS232 CONNECTIONS
P18-1 CD
P18-2 RX
P18-3 TX
P18-4 DTR
P18-5 GROUND
P18-6 DSR
P18-7 RTS
P18-8 CTS
P18-9 RI

P19 FACTORY TEST PORT
P19-1 GND
P19-2 +
P19-3 -
P19-4 GND
P19-5 +
P19-6 -

P20 RS485 NON-ISOLATED CONNECTIONS
P20-1 GND
P20-2 +
P20-3 -

P21 RS485A ISOLATED CONNECTIONS
P21-1 GND
P21-2 +
P21-3 -
P21-4 GND
P21-5 +
P21-6 -

P22 J1939 CONNECTIONS
P22-1 GND
P22-2 +
P22-3 -

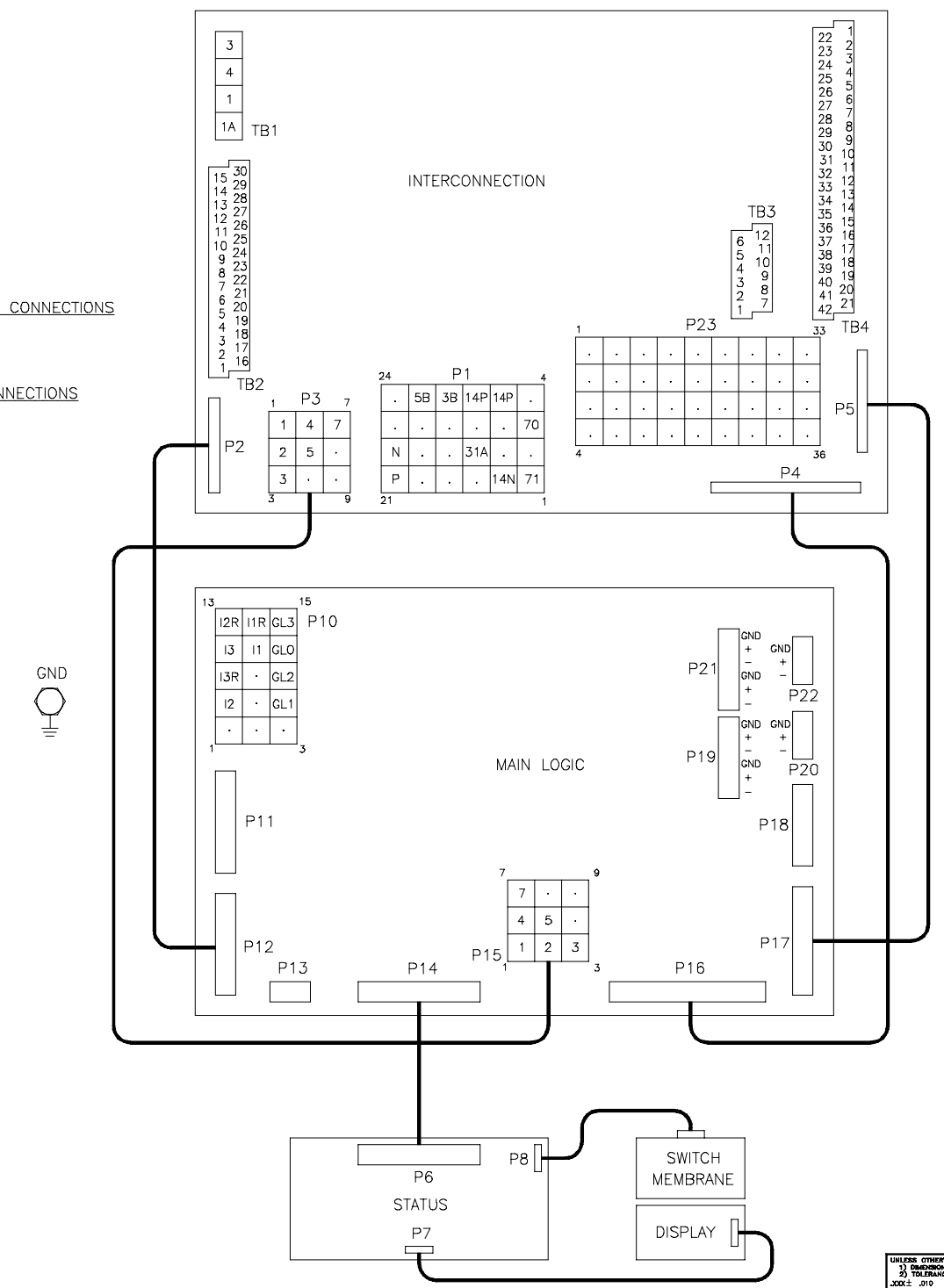

UNLESS OTHERWISE SPECIFIED - 1) DIMENSIONS ARE IN INCHES 2) TOLERANCES ARE:
.XXX ± .010 ANGLES ± 1/2°
.XX ± .030 SURFACE FINISH
.X ± .060 MAX.
FRACTIONS ±

APPROVALS		DATE
DRAWN	JS	8-23-99
CHECKED	DEL	4-28-00
APPROVED	TLK	4-17-00

TITLE DIAGRAM, SCHEMATIC 230-400 KW

SCALE / / / CAD NO. ADV6533B.DWG SHEET 2-2

PLOTTED DWG. NO. ADV-6533 D

REV	DATE	REVISION	BY	M F
D	8-18-03	(C-5) MSA ADDED [70007]	DFS	
E	4-12-04	(A-1,-2,-3) 350-450 KW WAS 350-400 KW IN DRAWING		
		TITLE & DESCRIPTION; (D-3,-7) D1, D2, D3 & D4 ACRONYM'S		
		ADDED TO DIODES [72001]	DFS	
F	6-11-04	(C-8) F1 & F2: 20A WAS 15A [72527]	DFS	
G	10-5-04	(D-3) K20: SECOND GROUND ADDED. [72843]	GFR	

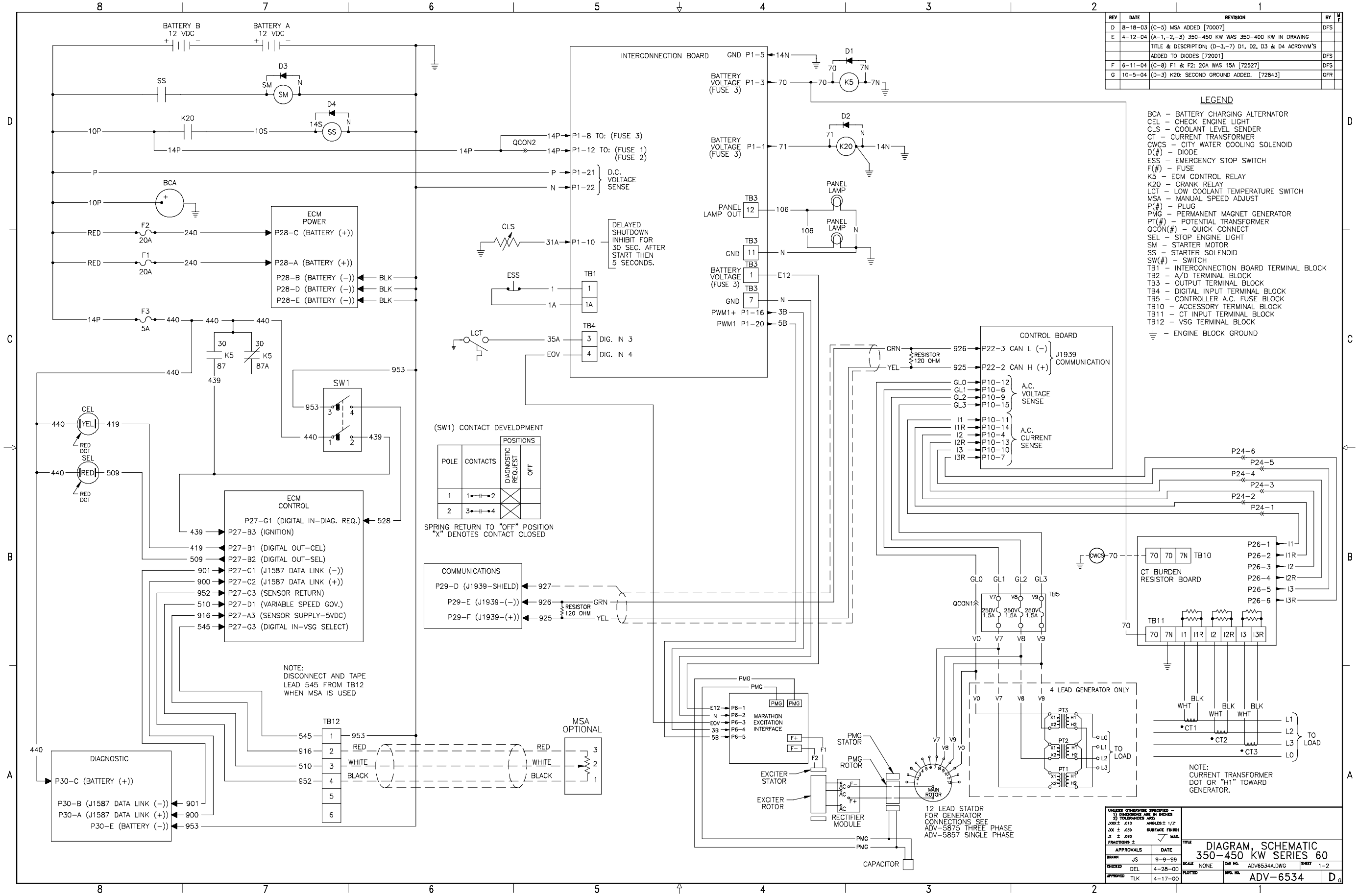

LEGEND

BCA – BATTERY CHARGING ALTERNATOR
CEL – CHECK ENGINE LIGHT
CLS – COOLANT LEVEL SENDER
CT – CURRENT TRANSFORMER
CWCS – CITY WATER COOLING SOLENOID
D(#) – DIODE
ESS – EMERGENCY STOP SWITCH
F(#) – FUSE
K5 – ECM CONTROL RELAY
K20 – CRANK RELAY
LCT – LOW COOLANT TEMPERATURE SWITCH
MSA – MANUAL SPEED ADJUST
P(#) – PLUG
PMG – PERMANENT MAGNET GENERATOR
PT(#) – POTENTIAL TRANSFORMER
QCON(#) – QUICK CONNECT
SEL – STOP ENGINE LIGHT
SM – STARTER MOTOR
SS – STARTER SOLENOID
SW(#) – SWITCH
TB1 – INTERCONNECTION BOARD TERMINAL BLOCK
TB2 – A/D TERMINAL BLOCK
TB3 – OUTPUT TERMINAL BLOCK
TB4 – DIGITAL INPUT TERMINAL BLOCK
TB5 – CONTROLLER A.C. FUSE BLOCK
TB10 – ACCESSORY TERMINAL BLOCK
TB11 – CT INPUT TERMINAL BLOCK
TB12 – VSG TERMINAL BLOCK
⏚ – ENGINE BLOCK GROUND

REV	DATE	REVISION	BY	M F
D	8-18-03	(D-5,-6) P19 FACTORY TEST PORT WAS P19 RS485B ISOLATED		
		CONNECTION [70007]	DFS	
E	4-12-04	(A-1,-2,-3) 350-450 KW WAS 350-400 KW IN DRAWING		
		TITLE & DESCRIPTION [72001]	DFS	
F	6-11-04	SEE SHEET 1 [72527]	DFS	
G	10-5-04	SEE SHEET 1 OF 2. [72843]	GFR	

INTERCONNECT BOARD

TB1 INPUT CONNECTIONS
TB1-1 REMOTE START (3)
TB1-2 REMOTE START (4)
TB1-3 EMERGENCY STOP GROUND (1)
TB1-4 EMERGENCY STOP (1A)

TB2 ANALOG INPUT CONNECTIONS
TB2-1 ANALOG CH1
TB2-2 ANALOG CH1(+)
TB2-3 ANALOG CH2
TB2-4 ANALOG CH2(+)
TB2-5 ANALOG CH3
TB2-6 ANALOG CH3(+)
TB2-7 ANALOG CH4
TB2-8 ANALOG CH4(+)
TB2-9 ANALOG CH5
TB2-10 ANALOG CH5(+)
TB2-11 ANALOG CH6
TB2-12 ANALOG CH6(+)
TB2-13 ANALOG CH7
TB2-14 ANALOG CH7(+)
TB2-15 N/C
TB2-16 ANALOG CH1(-)
TB2-17 CH1 SHIELD GROUND
TB2-18 ANALOG CH2(-)
TB2-19 CH2 SHIELD GROUND
TB2-20 ANALOG CH3(-)
TB2-21 CH3 SHIELD GROUND
TB2-22 ANALOG CH4(-)
TB2-23 CH4 SHIELD GROUND
TB2-24 ANALOG CH5(-)
TB2-25 CH5 SHIELD GROUND
TB2-26 ANALOG CH6(-)
TB2-27 CH6 SHIELD GROUND
TB2-28 ANALOG CH7(-)
TB2-29 CH7 SHIELD GROUND
TB2-30 N/C

TB4 DIGITAL INPUT CONNECTIONS
TB4-1 DIGITAL INPUT 1
TB4-2 DIGITAL INPUT 2
TB4-3 DIGITAL INPUT 3
TB4-4 DIGITAL INPUT 4
TB4-5 DIGITAL INPUT 5
TB4-6 DIGITAL INPUT 6
TB4-7 DIGITAL INPUT 7
TB4-8 DIGITAL INPUT 8
TB4-9 DIGITAL INPUT 9
TB4-10 DIGITAL INPUT 10
TB4-11 DIGITAL INPUT 11
TB4-12 DIGITAL INPUT 12
TB4-13 DIGITAL INPUT 13
TB4-14 DIGITAL INPUT 14
TB4-15 DIGITAL INPUT 15
TB4-16 DIGITAL INPUT 16
TB4-17 DIGITAL INPUT 17
TB4-18 DIGITAL INPUT 18
TB4-19 DIGITAL INPUT 19
TB4-20 DIGITAL INPUT 20
TB4-21 DIGITAL INPUT 21
TB4-22 COMMON DIGITAL INPUT RETURN
TB4-23 COMMON DIGITAL INPUT RETURN
TB4-24 COMMON DIGITAL INPUT RETURN
TB4-25 COMMON DIGITAL INPUT RETURN
TB4-26 COMMON DIGITAL INPUT RETURN
TB4-27 COMMON DIGITAL INPUT RETURN
TB4-28 COMMON DIGITAL INPUT RETURN
TB4-29 COMMON DIGITAL INPUT RETURN
TB4-30 COMMON DIGITAL INPUT RETURN
TB4-31 COMMON DIGITAL INPUT RETURN
TB4-32 COMMON DIGITAL INPUT RETURN
TB4-33 COMMON DIGITAL INPUT RETURN
TB4-34 COMMON DIGITAL INPUT RETURN
TB4-35 COMMON DIGITAL INPUT RETURN
TB4-36 COMMON DIGITAL INPUT RETURN
TB4-37 COMMON DIGITAL INPUT RETURN
TB4-38 COMMON DIGITAL INPUT RETURN
TB4-39 COMMON DIGITAL INPUT RETURN
TB4-40 COMMON DIGITAL INPUT RETURN
TB4-41 COMMON DIGITAL INPUT RETURN
TB4-42 COMMON DIGITAL INPUT RETURN

TB3 OUTPUT CONNECTIONS
TB3-1 +12 VDC (OEM USE ONLY)
TB3-2 +12 VDC (OEM USE ONLY)
TB3-3 +12 VDC (OEM USE ONLY)
TB3-4 FUSED BATTERY(+) (42A) (5 AMP)
TB3-5 FUSED BATTERY(+) (42A) (5 AMP)
TB3-6 FUSED BATTERY(+) (42A) (5 AMP)
TB3-7 GROUND
TB3-8 GROUND
TB3-9 GROUND
TB3-10 GROUND
TB3-11 GROUND
TB3-12 PANEL LAMP OUTPUT

P1 ENGINE CONNECTIONS
P1-1 ENGINE CRANK (71)
P1-2 SHIELD 1 GROUND
P1-3 ENGINE RUN (70)
P1-4 ENGINE CRANK (71)
P1-5 ENGINE BLOCK GROUND (14N)
P1-6 SHIELD 2 GROUND
P1-7 ENGINE RUN (70)
P1-8 BATTERY(+) (14P)
P1-9 SHIELD GROUND
P1-10 LOW COOLANT LEVEL PTC (31A)
P1-11 N/C
P1-12 BATTERY(+) (14P)
P1-13 MAGNETIC PICKUP INPUT 1
P1-14 N/C
P1-15 N/C
P1-16 PWM1(+)
P1-17 MAGNETIC PICKUP INPUT 2
P1-18 N/C
P1-19 N/C
P1-20 PWM1
P1-21 BATTERY(+) SENSE (P)
P1-22 BATTERY(-) SENSE (N)
P1-23 PWM2
P1-24 PWM2(+)

P23 OUTPUT CONNECTIONS
P23-1 DIGITAL OUTPUT 29
P23-2 DIGITAL OUTPUT 28
P23-3 DIGITAL OUTPUT 30
P23-4 DIGITAL OUTPUT 31
P23-5 GROUND
P23-6 DIGITAL OUTPUT 21
P23-7 DIGITAL OUTPUT 24
P23-8 DIGITAL OUTPUT 22
P23-9 FUSED BATTERY+ (42A) (5 AMP)
P23-10 DIGITAL OUTPUT 23
P23-11 DIGITAL OUTPUT 25
P23-12 DIGITAL OUTPUT 26
P23-13 DIGITAL OUTPUT 4
P23-14 DIGITAL OUTPUT 14
P23-15 DIGITAL OUTPUT 27
P23-16 DIGITAL OUTPUT 15
P23-17 DIGITAL OUTPUT 5
P23-18 N/C
P23-19 DIGITAL OUTPUT 20
P23-20 DIGITAL OUTPUT 18
P23-21 DIGITAL OUTPUT 3
P23-22 DIGITAL OUTPUT 16
P23-23 DIGITAL OUTPUT 8
P23-24 DIGITAL OUTPUT 7
P23-25 DIGITAL OUPTUT 1
P23-26 N/C
P23-27 DIGITAL OUTPUT 9
P23-28 DIGITAL OUTPUT 17
P23-29 DIGITAL OUTPUT 6
P23-30 N/C
P23-31 DIGITAL OUTPUT 11
P23-32 DIGITAL OUTPUT 19
P23-33 DIGITAL OUTPUT 12
P23-34 DIGITAL OUTPUT 10
P23-35 DIGITAL OUPUT 2
P23-36 DIGITAL OUTPUT 13

MAIN LOGIC BOARD

P13 MODEM POWER CONNECTIONS
P13-1 GROUND
P13-2 +5 VD

P18 RS232 CONNECTIONS
P18-1 CD
P18-2 RX
P18-3 TX
P18-4 DTR
P18-5 GROUND
P18-6 DSR
P18-7 RTS
P18-8 CTS
P18-9 RI

P19 FACTORY TEST PORT
P19-1 GND
P19-2 +
P19-3 -
P19-4 GND
P19-5 +
P19-6 -

P20 RS485 NON-ISOLATED CONNECTIONS
P20-1 GND
P20-2 +
P20-3 -

P21 RS485A ISOLATED CONNECTIONS
P21-1 GND
P21-2 +
P21-3 -
P21-4 GND
P21-5 +
P21-6 -

P22 J1939 CONNECTIONS
P22-1 GND
P22-2 +
P22-3 -

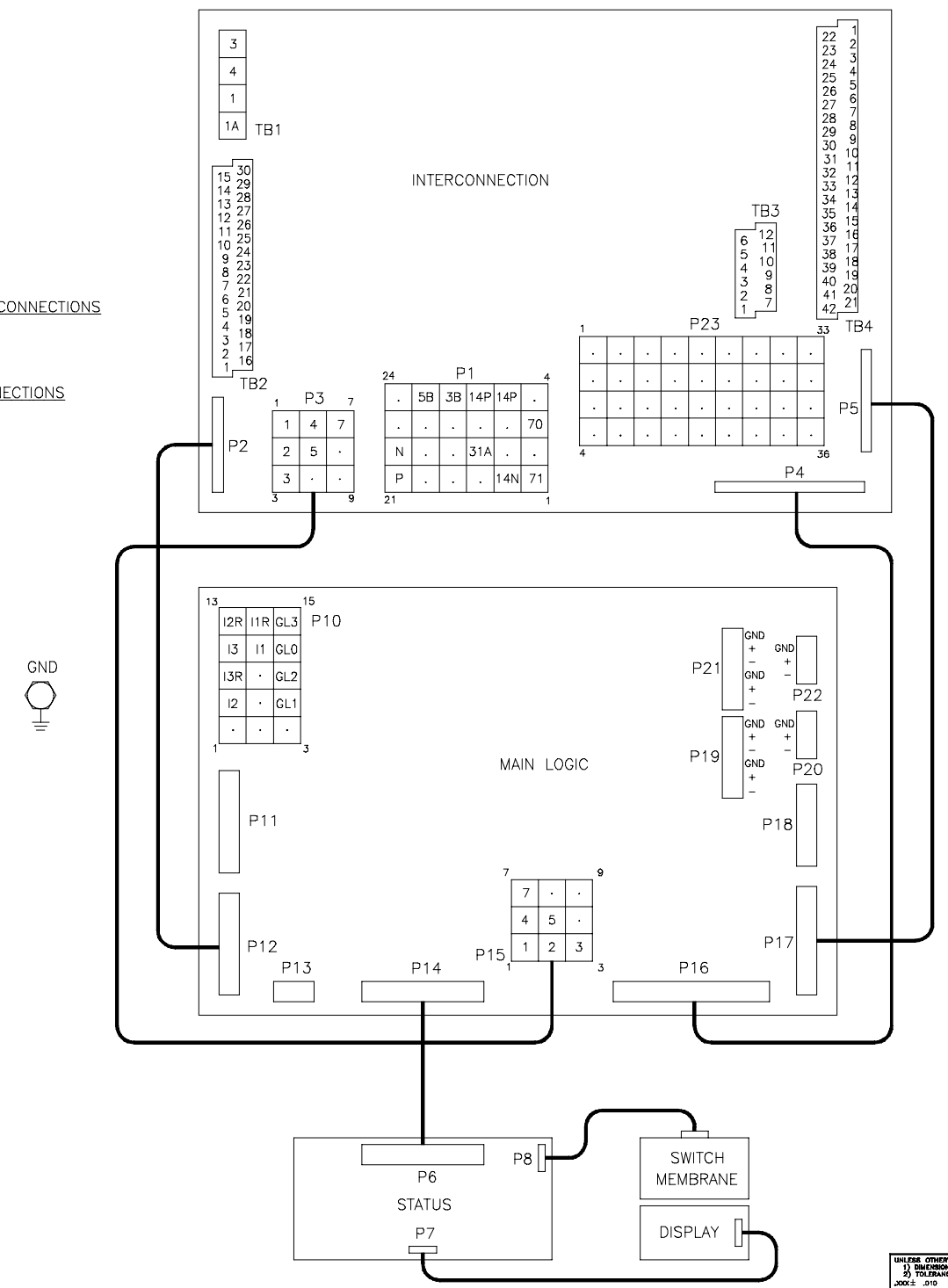

UNLESS OTHERWISE SPECIFIED - 1) DIMENSIONS ARE IN INCHES 2) TOLERANCES ARE: .XXX ± .010 ANGLES ± 1/2° .XX ± .030 SURFACE FINISH .X ± .060 MAX. FRACTIONS ±

APPROVALS		DATE
DRAWN	JS	9-10-99
CHECKED	DEL	4-28-00
APPROVED	TLK	4-17-00

TITLE DIAGRAM, SCHEMATIC 350-450 KW

SCALE / / / CAD DWG. ADV6534B.DWG SHEET 2-2

PLOTTED DWG. NO. ADV-6534 D

REV	DATE	REVISION	BY	M F
–	1–5–01	NEW DRAWING [63055]	JS	
A	9–7–01	SEE SHEET 2 [65566]	JS	
B	5–21–04	(A–2,–3,–4) GENERATOR CONNECTIONS MOVED TO SEPARATE		
		DRAWINGS (ADV–6957 & ADV–6958); (D–3, 4) ACRONYMS		
		ADDED TO DIODES (C–8) K11 WAS K5 [71832]	SAM	
C	10–5–04	(C–3) K20: SECOND GROUND ADDED. [72843]	GFR	

TB12 CONNECTION GUIDE

	TB12 TERMINAL POSITION	ECM #1 SWITCHABLE SPEED 1500 RPM	ECM #1 SWITCHABLE SPEED 1800 RPM	ECM #2 1500 RPM ISOCHRONOUS OR VARIABLE SPEED GOVERNOR: 1500 ISOCH.	ECM #2: VSG ISOCH.	ECM #2: VSG W/DROOP	ECM #3 1800 RPM ISOCHRONOUS OR VARIABLE SPEED GOVERNOR: 1800 ISOCH.	ECM #3: VSG ISOCH.	ECM #3: VSG W/DROOP
VARIABLE	1				LOAD SHARE +5V			LOAD SHARE +5V	
SPEED	2				LOAD SHARE SIGNAL			LOAD SHARE SIGNAL	
ISOCH.	3				LOAD SHARE GND			LOAD SHARE GND	
VARIABLE	4					SPEED POT PIN 1			SPEED POT PIN 1
SPEED	5					SPEED POT PIN 2 (WIPER)			SPEED POT PIN 2 (WIPER)
W/DROOP	6					SPEED POT PIN 3			SPEED POT PIN 3
DROOP	7	JUMPER	JUMPER	JUMPER	JUMPER		JUMPER	JUMPER	
DISABLE	8	7 TO 8	7 TO 8	7 TO 8	7 TO 8		7 TO 8	7 TO 8	
SPEED 1	9	JUMPER		JUMPER					
VBAT	10	9 TO 10	JUMPER	9 TO 10			JUMPER		
SPEED 2	11		10 TO 11				10 TO 11		
N/C	12								
N/C	13								

(SW1) CONTACT DEVELOPMENT

POLE	CONTACTS	POSITIONS: DIAGNOSTIC REQUEST	POSITIONS: OFF
1	1–2	X	
2	3–4	X	

SPRING RETURN TO "OFF" POSITION
"X" DENOTES CONTACT CLOSED

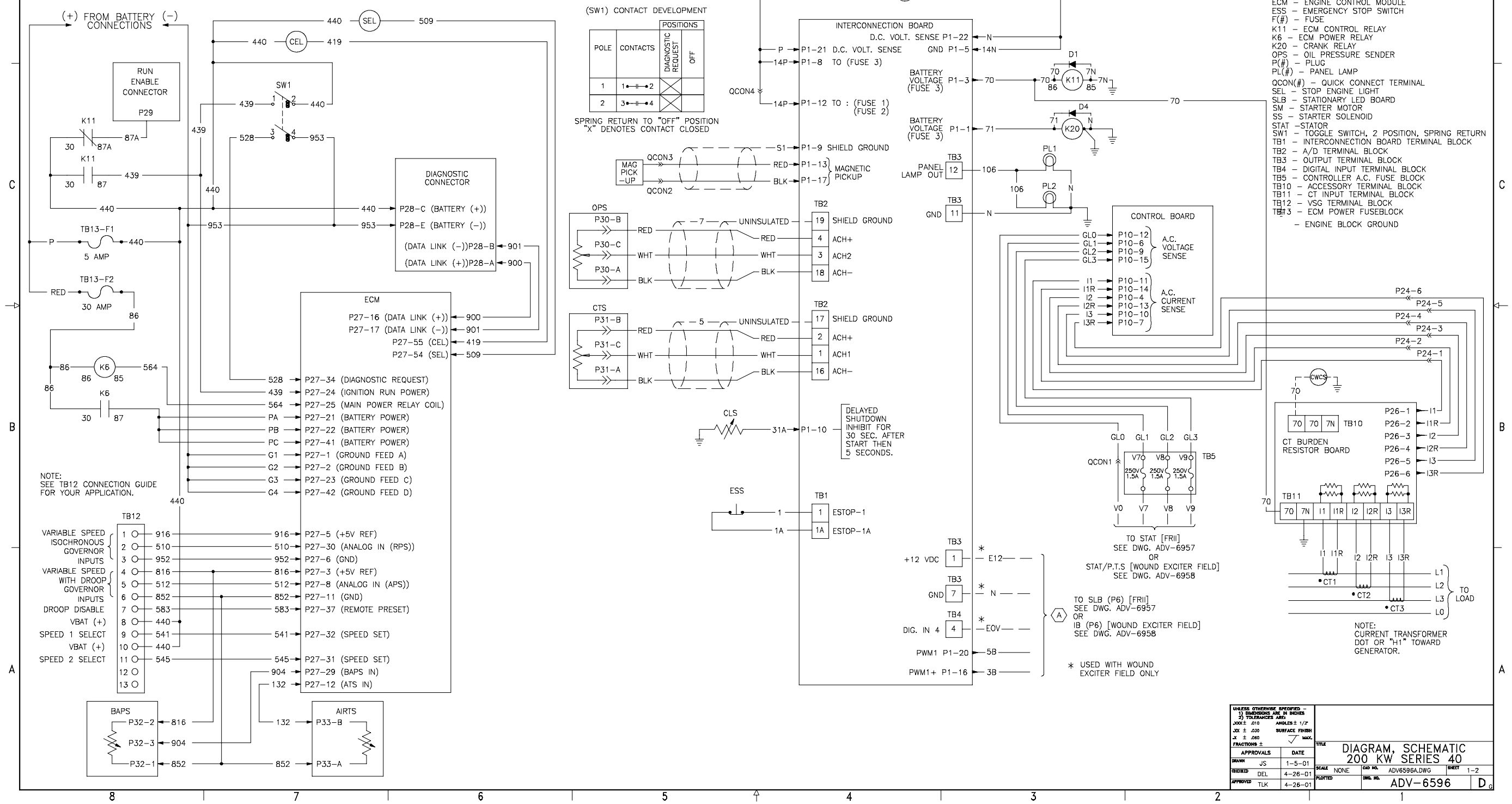

LEGEND

AIRTS – AIR TEMPERATURE SENSOR
BAPS – BAROMETRIC AIR PRESSURE SENSOR
BCA – BATTERY CHARGING ALTERNATOR
CEL – CHECK ENGINE LIGHT
CLS – COOLANT LEVEL SENDER
CT(#) – CURRENT TRANSFORMER
CTS – COOLANT TEMPERATURE SENDER
CWCS – CITY WATER COOLING SOLENOID
ECM – ENGINE CONTROL MODULE
ESS – EMERGENCY STOP SWITCH
F(#) – FUSE
K11 – ECM CONTROL RELAY
K6 – ECM POWER RELAY
K20 – CRANK RELAY
OPS – OIL PRESSURE SENDER
P(#) – PLUG
PL(#) – PANEL LAMP
QCON(#) – QUICK CONNECT TERMINAL
SEL – STOP ENGINE LIGHT
SLB – STATIONARY LED BOARD
SM – STARTER MOTOR
SS – STARTER SOLENOID
STAT –STATOR
SW1 – TOGGLE SWITCH, 2 POSITION, SPRING RETURN
TB1 – INTERCONNECTION BOARD TERMINAL BLOCK
TB2 – A/D TERMINAL BLOCK
TB3 – OUTPUT TERMINAL BLOCK
TB4 – DIGITAL INPUT TERMINAL BLOCK
TB5 – CONTROLLER A.C. FUSE BLOCK
TB10 – ACCESSORY TERMINAL BLOCK
TB11 – CT INPUT TERMINAL BLOCK
TB12 – VSG TERMINAL BLOCK
TB13 – ECM POWER FUSEBLOCK
– ENGINE BLOCK GROUND

UNLESS OTHERWISE SPECIFIED – 1) DIMENSIONS ARE IN INCHES 2) TOLERANCES ARE: .XXX ± .010 ANGLES ± 1/2° .XX ± .030 SURFACE FINISH .X ± .060 MAX. FRACTIONS ±

APPROVALS		DATE
DRAWN	JS	1–5–01
CHECKED	DEL	4–26–01
APPROVED	TLK	4–26–01

TITLE DIAGRAM, SCHEMATIC 200 KW SERIES 40
SCALE NONE CAD NO. ADV6596A.DWG SHEET 1–2
PLOTTED DWG. NO. ADV–6596 D6

REV	DATE	REVISION	BY	M F
–	1–8–01	NEW DRAWING [63055]	JS	
A	9–7–01	(A,B–8) TB4–22 TO TB4–42: COMMON DIGITAL INPUT RETURN		
		WAS DIGITAL INPUT RETURN; (D–5) P19 FACTORY TEST PORT		
		WAS P19 RS485B ISOLATED CONNECTIONS [65566]	JS	
B	5–21–04	SEE SHEET 1 [71832]	SAM	
C	10–5–04	SEE SHEET 1 OF 2. [72843]	GFR	

INTERCONNECT BOARD

TB1 INPUT CONNECTIONS
TB1–1 REMOTE START (3)
TB1–2 REMOTE START (4)
TB1–3 EMERGENCY STOP GROUND (1)
TB1–4 EMERGENCY STOP (1A)

TB2 ANALOG INPUT CONNECTIONS
TB2–1 ANALOG CH1
TB2–2 ANALOG CH1+
TB2–3 ANALOG CH2
TB2–4 ANALOG CH2+
TB2–5 ANALOG CH3
TB2–6 ANALOG CH3+
TB2–7 ANALOG CH4
TB2–8 ANALOG CH4+
TB2–9 ANALOG CH5
TB2–10 ANALOG CH5+
TB2–11 ANALOG CH6
TB2–12 ANALOG CH6+
TB2–13 ANALOG CH7
TB2–14 ANALOG CH7+
TB2–15 N/C
TB2–16 ANALOG CH1–
TB2–17 CH1 SHIELD GROUND
TB2–18 ANALOG CH2–
TB2–19 CH2 SHIELD GROUND
TB2–20 ANALOG CH3–
TB2–21 CH3 SHIELD GROUND
TB2–22 ANALOG CH4–
TB2–23 CH4 SHIELD GROUND
TB2–24 ANALOG CH5–
TB2–25 CH5 SHIELD GROUND
TB2–26 ANALOG CH6–
TB2–27 CH6 SHIELD GROUND
TB2–28 ANALOG CH7–
TB2–29 CH7 SHIELD GROUND
TB2–30 N/C

TB4 DIGITAL INPUT CONNECTIONS
TB4–1 DIGITAL INPUT 1
TB4–2 DIGITAL INPUT 2
TB4–3 DIGITAL INPUT 3
TB4–4 DIGITAL INPUT 4
TB4–5 DIGITAL INPUT 5
TB4–6 DIGITAL INPUT 6
TB4–7 DIGITAL INPUT 7
TB4–8 DIGITAL INPUT 8
TB4–9 DIGITAL INPUT 9
TB4–10 DIGITAL INPUT 10
TB4–11 DIGITAL INPUT 11
TB4–12 DIGITAL INPUT 12
TB4–13 DIGITAL INPUT 13
TB4–14 DIGITAL INPUT 14
TB4–15 DIGITAL INPUT 15
TB4–16 DIGITAL INPUT 16
TB4–17 DIGITAL INPUT 17
TB4–18 DIGITAL INPUT 18
TB4–19 DIGITAL INPUT 19
TB4–20 DIGITAL INPUT 20
TB4–21 DIGITAL INPUT 21
TB4–22 COMMON DIGITAL INPUT RETURN
TB4–23 COMMON DIGITAL INPUT RETURN
TB4–24 COMMON DIGITAL INPUT RETURN
TB4–25 COMMON DIGITAL INPUT RETURN
TB4–26 COMMON DIGITAL INPUT RETURN
TB4–27 COMMON DIGITAL INPUT RETURN
TB4–28 COMMON DIGITAL INPUT RETURN
TB4–29 COMMON DIGITAL INPUT RETURN
TB4–30 COMMON DIGITAL INPUT RETURN
TB4–31 COMMON DIGITAL INPUT RETURN
TB4–32 COMMON DIGITAL INPUT RETURN
TB4–33 COMMON DIGITAL INPUT RETURN
TB4–34 COMMON DIGITAL INPUT RETURN
TB4–35 COMMON DIGITAL INPUT RETURN
TB4–36 COMMON DIGITAL INPUT RETURN
TB4–37 COMMON DIGITAL INPUT RETURN
TB4–38 COMMON DIGITAL INPUT RETURN
TB4–39 COMMON DIGITAL INPUT RETURN
TB4–40 COMMON DIGITAL INPUT RETURN
TB4–41 COMMON DIGITAL INPUT RETURN
TB4–42 COMMON DIGITAL INPUT RETURN

TB3 OUTPUT CONNECTIONS
TB3–1 +12 VDC (OEM USE ONLY)
TB3–2 +12 VDC (OEM USE ONLY)
TB3–3 +12 VDC (OEM USE ONLY)
TB3–4 FUSED BATTERY+ (42A) (5 AMP)
TB3–5 FUSED BATTERY+ (42A) (5 AMP)
TB3–6 FUSED BATTERY+ (42A) (5 AMP)
TB3–7 GROUND
TB3–8 GROUND
TB3–9 GROUND
TB3–10 GROUND
TB3–11 GROUND
TB3–12 PANEL LAMP OUTPUT

P1 ENGINE CONNECTIONS
P1–1 ENGINE CRANK (71)
P1–2 SHIELD 1 GROUND
P1–3 ENGINE RUN (70)
P1–4 ENGINE CRANK (71)
P1–5 ENGINE BLOCK GROUND (14N)
P1–6 SHIELD 2 GROUND
P1–7 ENGINE RUN (70)
P1–8 BATTERY+ (14P)
P1–9 SHIELD GROUND
P1–10 LOW COOLANT LEVEL PTC (31A)
P1–11 N/C
P1–12 BATTERY+ (14P)
P1–13 MAGNETIC PICKUP INPUT 1
P1–14 N/C
P1–15 N/C
P1–16 PWM1+
P1–17 MAGNETIC PICKUP INPUT 2
P1–18 N/C
P1–19 N/C
P1–20 PWM1
P1–21 BATTERY+ SENSE (P)
P1–22 BATTERY– SENSE (N)
P1–23 PWM2
P1–24 PWM2+

P23 OUTPUT CONNECTIONS
P23–1 DIGITAL OUTPUT 29
P23–2 DIGITAL OUTPUT 28
P23–3 DIGITAL OUTPUT 30
P23–4 DIGITAL OUTPUT 31
P23–5 GROUND
P23–6 DIGITAL OUTPUT 21
P23–7 DIGITAL OUTPUT 24
P23–8 DIGITAL OUTPUT 22
P23–9 FUSED BATTERY+ (42A) (5 AMP)
P23–10 DIGITAL OUTPUT 23
P23–11 DIGITAL OUTPUT 25
P23–12 DIGITAL OUTPUT 26
P23–13 DIGITAL OUTPUT 4
P23–14 DIGITAL OUTPUT 14
P23–15 DIGITAL OUTPUT 27
P23–16 DIGITAL OUTPUT 15
P23–17 DIGITAL OUTPUT 5
P23–18 N/C
P23–19 DIGITAL OUTPUT 20
P23–20 DIGITAL OUTPUT 18
P23–21 DIGITAL OUTPUT 3
P23–22 DIGITAL OUTPUT 16
P23–23 DIGITAL OUTPUT 8
P23–24 DIGITAL OUTPUT 7
P23–25 DIGITAL OUTPUT 1
P23–26 N/C
P23–27 DIGITAL OUTPUT 9
P23–28 DIGITAL OUTPUT 17
P23–29 DIGITAL OUTPUT 6
P23–30 N/C
P23–31 DIGITAL OUTPUT 11
P23–32 DIGITAL OUTPUT 19
P23–33 DIGITAL OUTPUT 12
P23–34 DIGITAL OUTPUT 10
P23–35 DIGITAL OUTPUT 2
P23–36 DIGITAL OUTPUT 13

MAIN LOGIC BOARD

P13 MODEM POWER CONNECTIONS
P13–1 GROUND
P13–2 +5 VD

P18 RS232 CONNECTIONS
P18–1 CD
P18–2 RX
P18–3 TX
P18–4 DTR
P18–5 GROUND
P18–6 DSR
P18–7 RTS
P18–8 CTS
P18–9 RI

P19 FACTORY TEST PORT
P19–1 GND
P19–2 +
P19–3 –
P19–4 GND
P19–5 +
P19–6 –

P20 RS485 NON–ISOLATED CONNECTIONS
P20–1 GND
P20–2 +
P20–3 –

P21 RS485A ISOLATED CONNECTIONS
P21–1 GND
P21–2 +
P21–3 –
P21–4 GND
P21–5 +
P21–6 –

P22 J1939 CONNECTIONS
P22–1 GND
P22–2 +
P22–3 –

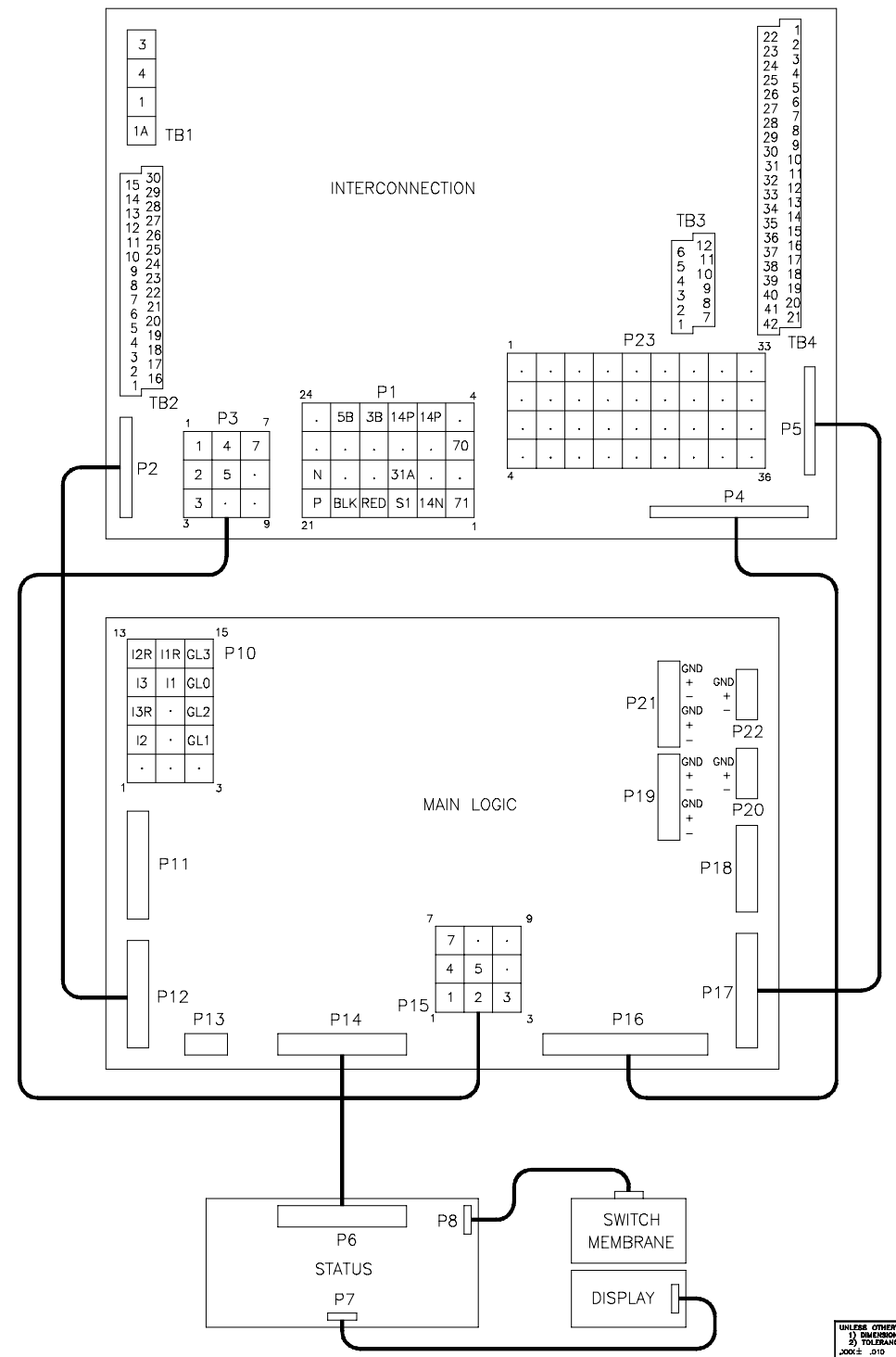

UNLESS OTHERWISE SPECIFIED – 1) DIMENSIONS ARE IN INCHES 2) TOLERANCES ARE: .XXX ± .010 .XX ± .030 .X ± .060 FRACTIONS ± ANGLES ± 1/2° SURFACE FINISH MAX.

APPROVALS		DATE
DRAWN	JS	1–8–01
CHECKED	DEL	4–24–01
APPROVED	TLK	4–25–01

TITLE DIAGRAM, SCHEMATIC 200 KW SERIES 40
SCALE / / / CAD NO. ADV6596B.DWG SHEET 2–2
PLOTTED DWG. NO. ADV–6596 D

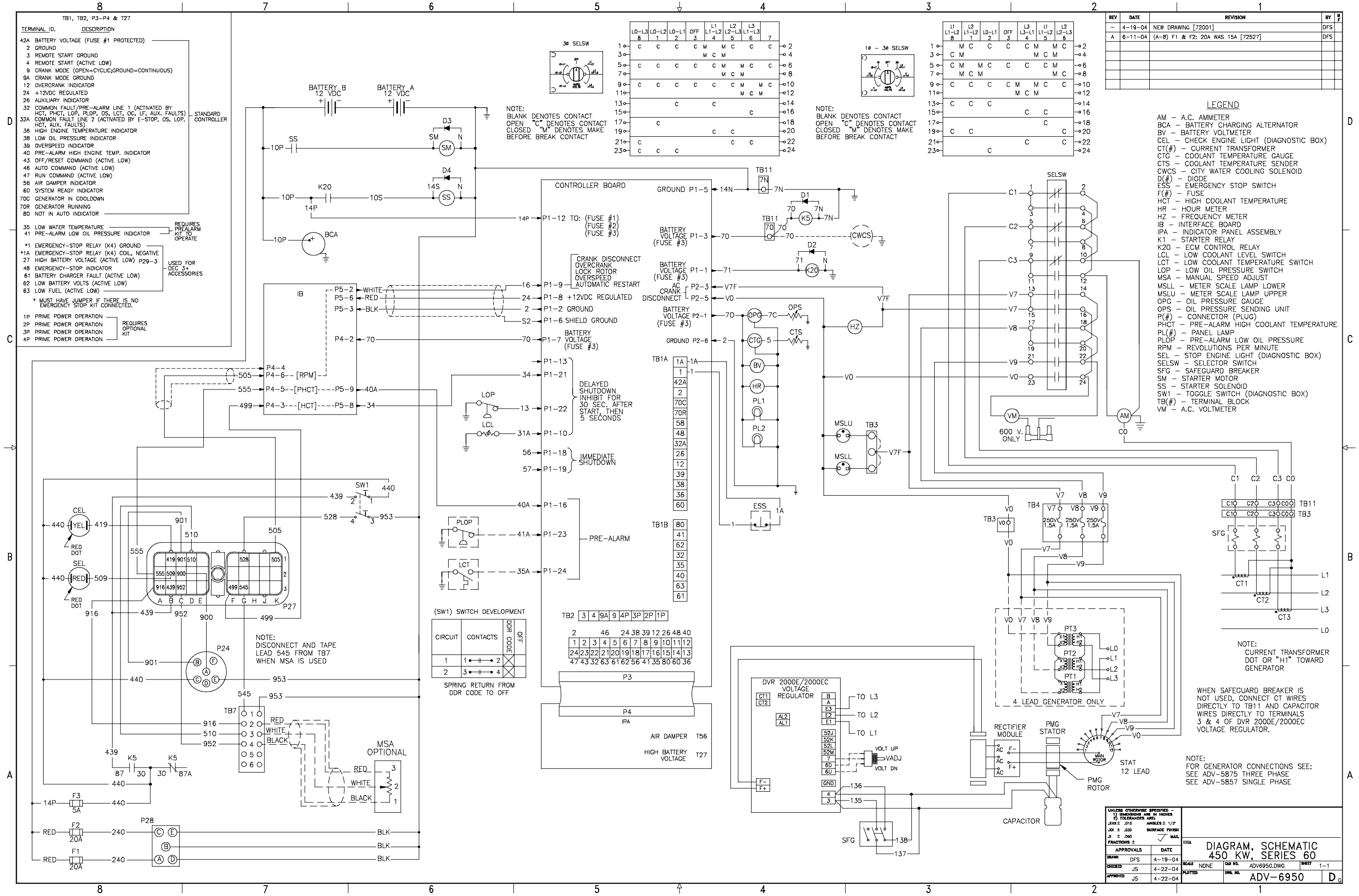

REV	DATE	REVISION	BY	M F
–	4-19-04	NEW DRAWING [72001]	DFS	
A	6-11-04	(A-8) F1 & F2: 20A WAS 15A [72527]	DFS	

LEGEND

AM – A.C. AMMETER
BCA – BATTERY CHARGING ALTERNATOR
BV – BATTERY VOLTMETER
CEL – CHECK ENGINE LIGHT (DIAGNOSTIC BOX)
CT(#) – CURRENT TRANSFORMER
CTC – COOLANT TEMPERATURE GAUGE
CTS – COOLANT TEMPERATURE SENDER
CWCS – CITY WATER COOLING SOLENOID
D(#) – DIODE
ESS – EMERGENCY STOP SWITCH
F(#) – FUSE
HCT – HIGH COOLANT TEMPERATURE
HR – HOUR METER
HZ – FREQUENCY METER
IB – INTERFACE BOARD
IPA – INDICATOR PANEL ASSEMBLY
K1 – STARTER RELAY
K20 – ECM CONTROL RELAY
LCL – LOW COOLANT LEVEL SWITCH
LCT – LOW COOLANT TEMPERATURE SWITCH
LOP – LOW OIL PRESSURE SWITCH
MSA – MANUAL SPEED ADJUST
MSLL – METER SCALE LAMP LOWER
MSLU – METER SCALE LAMP UPPER
OPG – OIL PRESSURE GAUGE
OPS – OIL PRESSURE SENDING UNIT
P(#) – CONNECTOR (PLUG)
PHCT – PRE-ALARM HIGH COOLANT TEMPERATURE
PL(#) – PANEL LAMP
PLOP – PRE-ALARM LOW OIL PRESSURE
RPM – REVOLUTIONS PER MINUTE
SEL – STOP ENGINE LIGHT (DIAGNOSTIC BOX)
SELSW – SELECTOR SWITCH
SFG – SAFEGUARD BREAKER
SM – STARTER MOTOR
SS – STARTER SOLENOID
SW1 – TOGGLE SWITCH (DIAGNOSTIC BOX)
TB(#) – TERMINAL BLOCK
VM – A.C. VOLTMETER

REV	DATE	REVISION	BY	M F
–	5–19–04	NEW DRAWING [71832]	DFS	
A	10–27–04	(C,D–6) SSEN TYPE 2 ADDED [73348]	DFS	

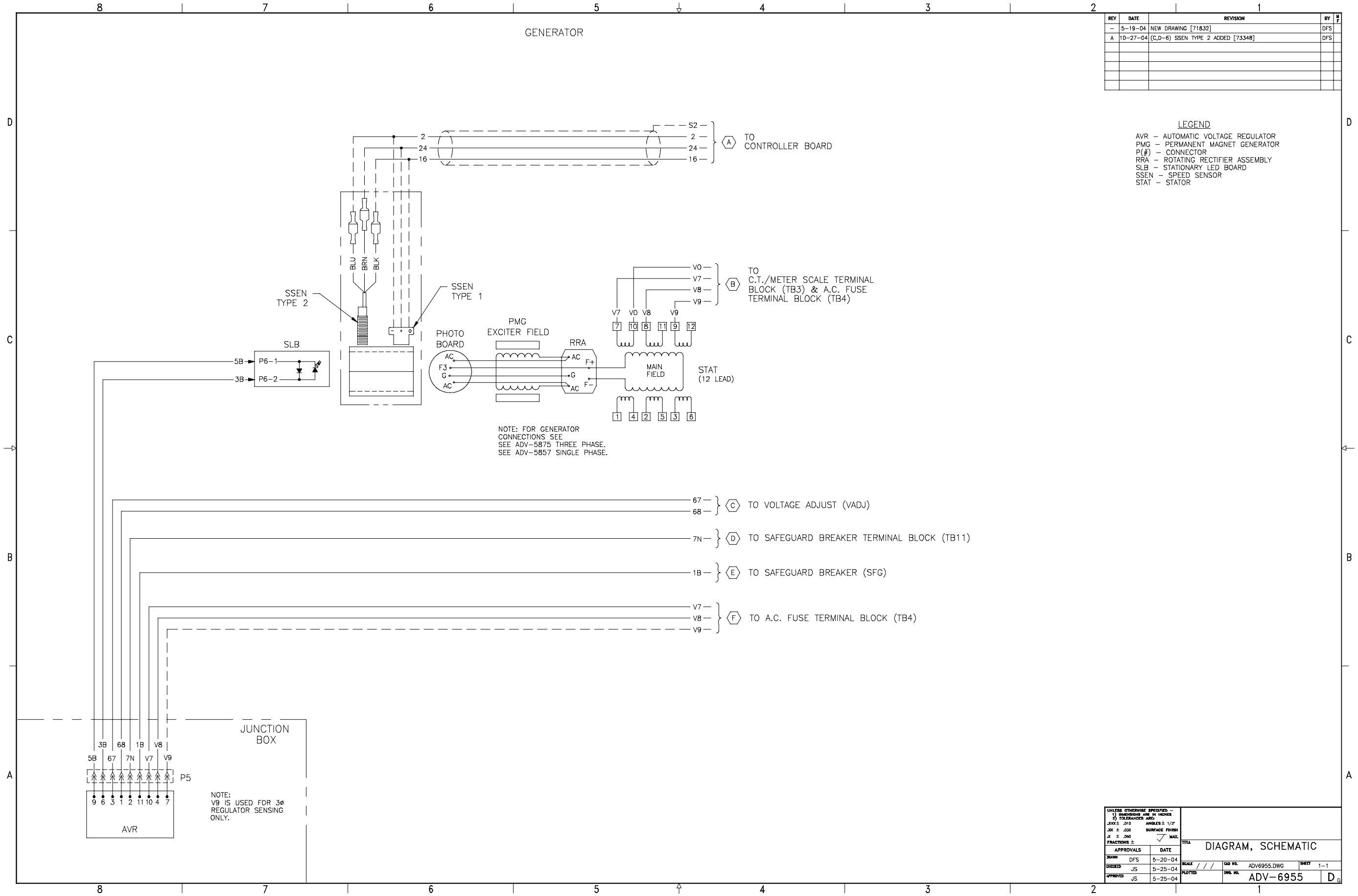

REV	DATE	REVISION	BY	M F
–	5–20–04	NEW DRAWING [71832]	DFS	
A	6–17–04	(A–6, B–6, D–6) F1 ADDED (3 PLACES) [72665]	DFS	
B	10–27–04	(C,D–8) SSEN TYPE 2 ADDED [73348]	DFS	
C	2–2–05	(C–7, A–3) F1 WAS FP, F2 WAS FN [74342]	SAM	
D	7–31–06	(B–6) V8 WAS 44, V7 WAS 11 & V0 ADDED [78844]	CRS	

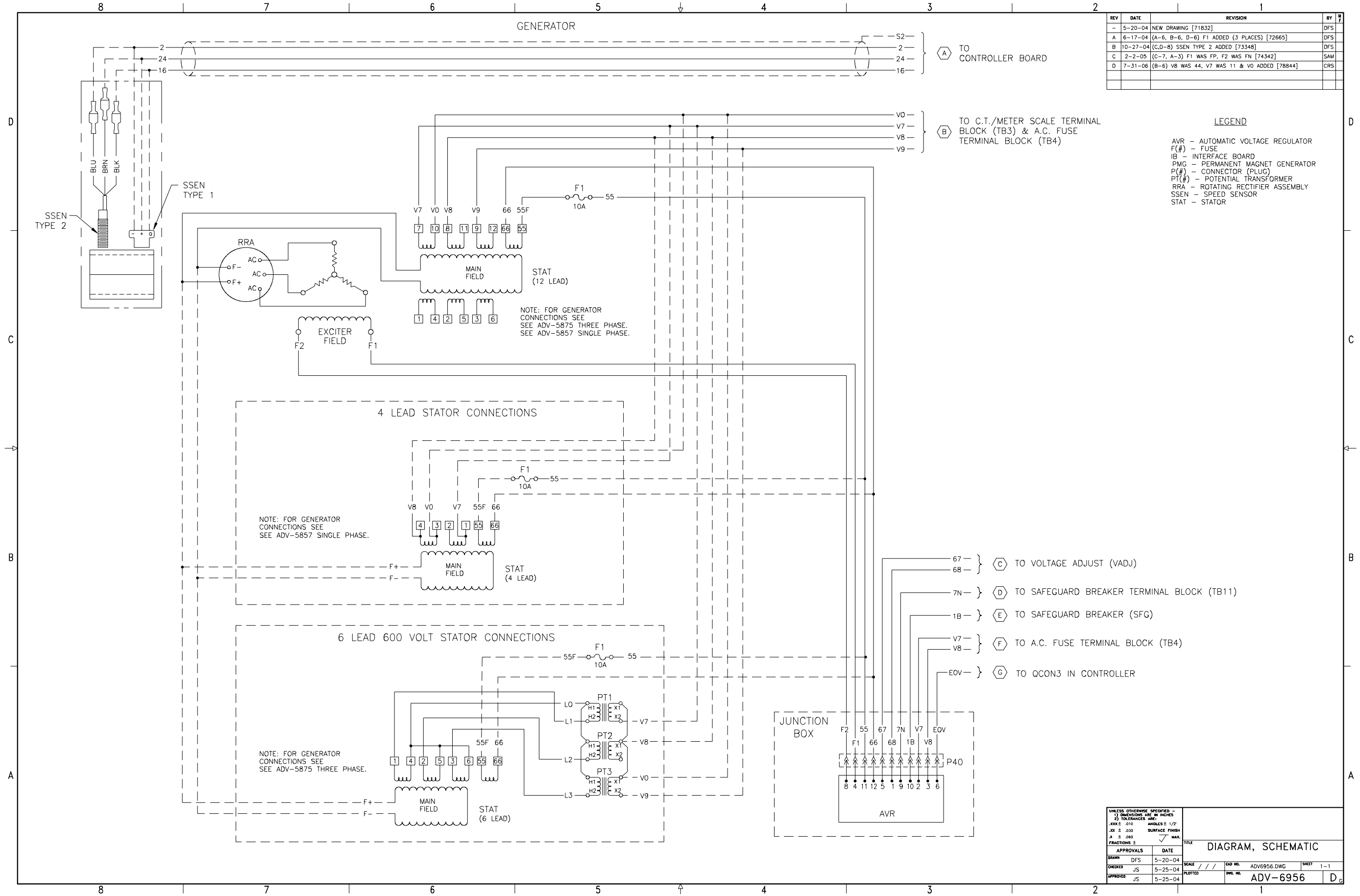

LEGEND

AVR – AUTOMATIC VOLTAGE REGULATOR
F(#) – FUSE
IB – INTERFACE BOARD
PMG – PERMANENT MAGNET GENERATOR
P(#) – CONNECTOR (PLUG)
PT(#) – POTENTIAL TRANSFORMER
RRA – ROTATING RECTIFIER ASSEMBLY
SSEN – SPEED SENSOR
STAT – STATOR

UNLESS OTHERWISE SPECIFIED – 1) DIMENSIONS ARE IN INCHES 2) TOLERANCES ARE:
.XXX ± .010 ANGLES ± 1/2
.XX ± .030 SURFACE FINISH
.X ± .060 √ MAX.
FRACTIONS ±

APPROVALS		DATE
DRAWN	DFS	5–20–04
CHECKED	JS	5–25–04
APPROVED	JS	5–25–04

TITLE DIAGRAM, SCHEMATIC

SCALE / / / | CAD NO. ADV6956.DWG | SHEET 1–1

PLOTTED | DWG. NO. ADV–6956 | D

REV	DATE	REVISION	BY	MF
–	5–19–04	NEW DRAWING [71832]	DFS	

GENERATOR

LEGEND

PMG – PERMANENT MAGNET GENERATOR
RRA – ROTATING RECTIFIER ASSEMBLY
SLB – STATIONARY LED BOARD
STAT – STATOR

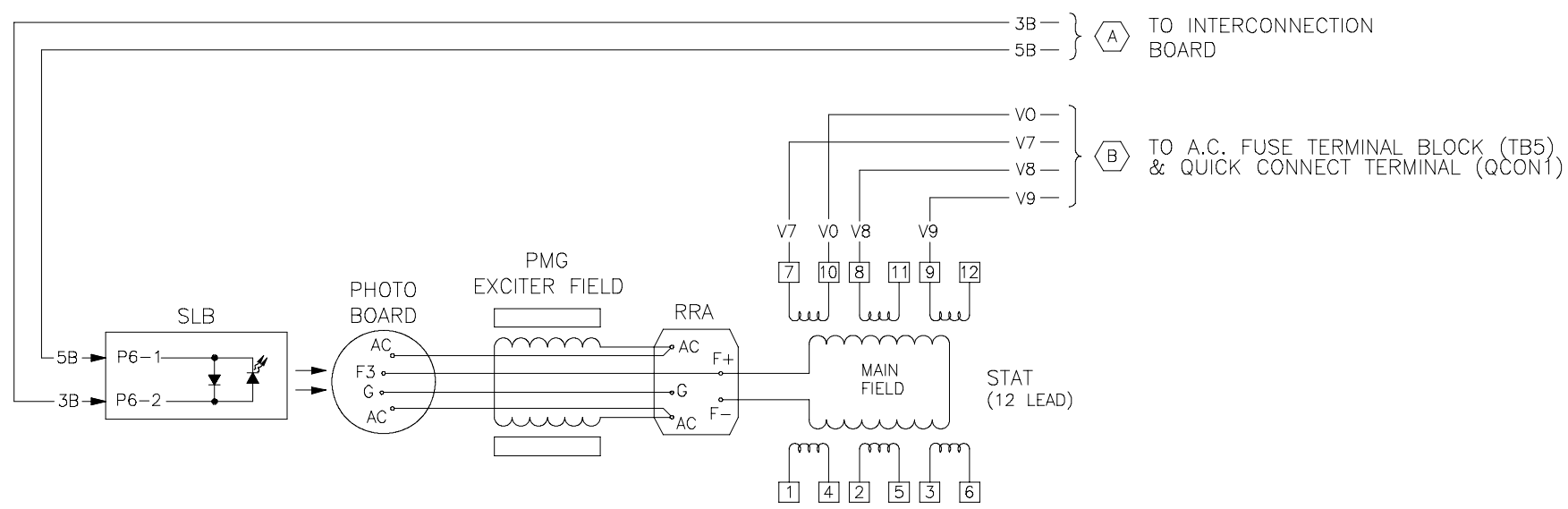

NOTE: FOR GENERATOR CONNECTIONS SEE
SEE ADV–5875 THREE PHASE.
SEE ADV–5857 SINGLE PHASE.

UNLESS OTHERWISE SPECIFIED –
1) DIMENSIONS ARE IN INCHES
2) TOLERANCES ARE:
.XXX ± .010 ANGLES ± 1/2°
.XX ± .030 SURFACE FINISH
.X ± .060 √ MAX.
FRACTIONS ±

APPROVALS		DATE
DRAWN	DFS	5–19–04
CHECKED	JS	5–25–04
APPROVED	JS	5–25–04

TITLE DIAGRAM, SCHEMATIC

SCALE / / / | CAD NO. ADV6957.DWG | SHEET 1–1

PLOTTED | DWG. NO. ADV–6957 | C G

REV	DATE	REVISION	BY	M F
–	5–20–04	NEW DRAWING [71832]	DFS	
A	2–2–05	(C–6) F2 WAS FN, F1 WAS FP [74342]	SAM	

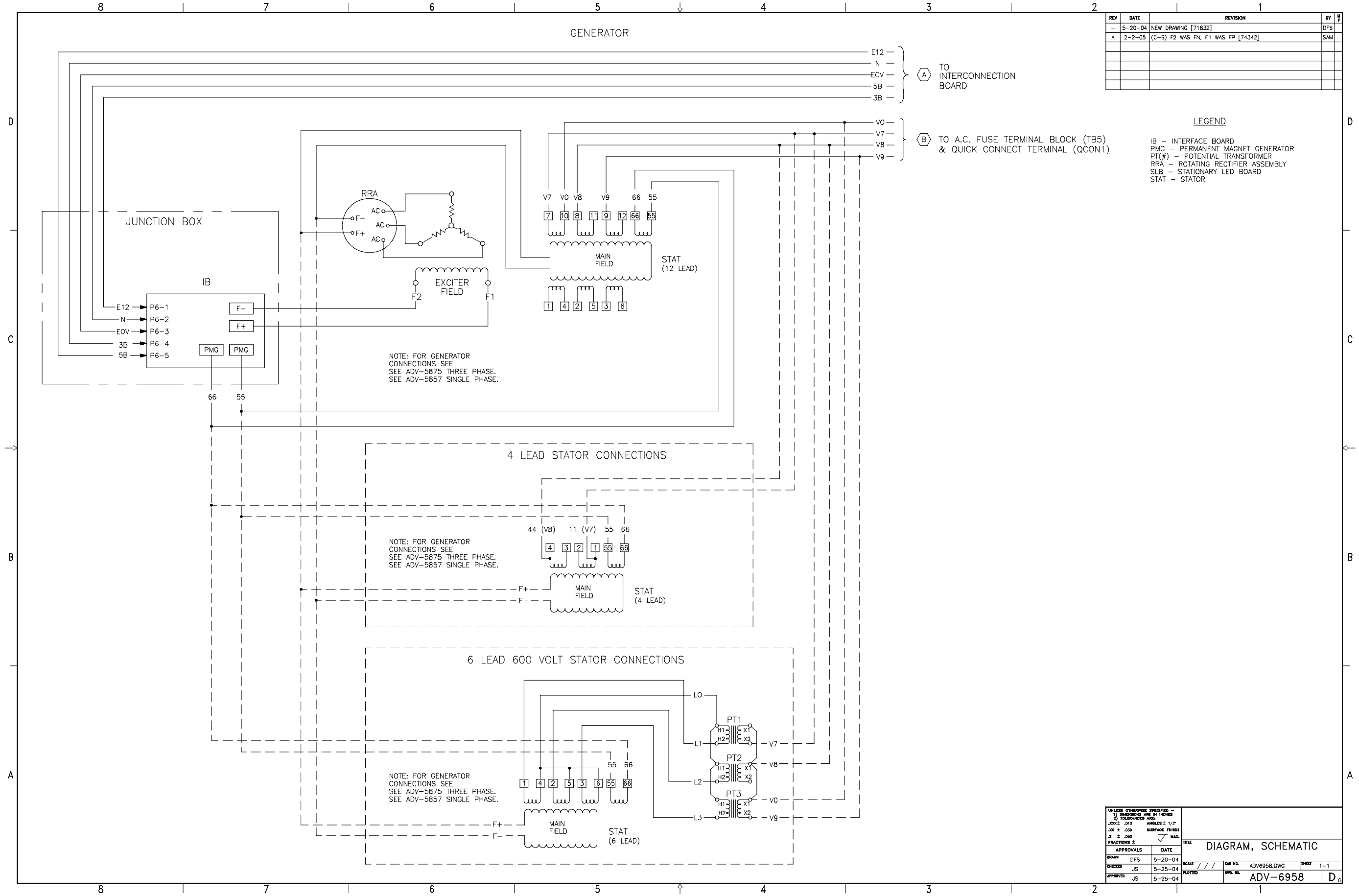

LEGEND

IB – INTERFACE BOARD
PMG – PERMANENT MAGNET GENERATOR
PT(#) – POTENTIAL TRANSFORMER
RRA – ROTATING RECTIFIER ASSEMBLY
SLB – STATIONARY LED BOARD
STAT – STATOR

UNLESS OTHERWISE SPECIFIED –
1) DIMENSIONS ARE IN INCHES
2) TOLERANCES ARE:
.XXX ± .010 ANGLES ± 1/2°
.XX ± .030 SURFACE FINISH
.X ± .060 √ MAX.
FRACTIONS ±

APPROVALS		DATE
DRAWN	DFS	5–20–04
CHECKED	JS	5–25–04
APPROVED	JS	5–25–04

TITLE DIAGRAM, SCHEMATIC

SCALE / / / | CAD NO. ADV6958.DWG | SHEET 1–1

PLOTTED | DWG. NO. ADV–6958 | D G

REV	DATE	REVISION	BY	M F
–	2–18–05	NEW DRAWING [73953]	DFS	

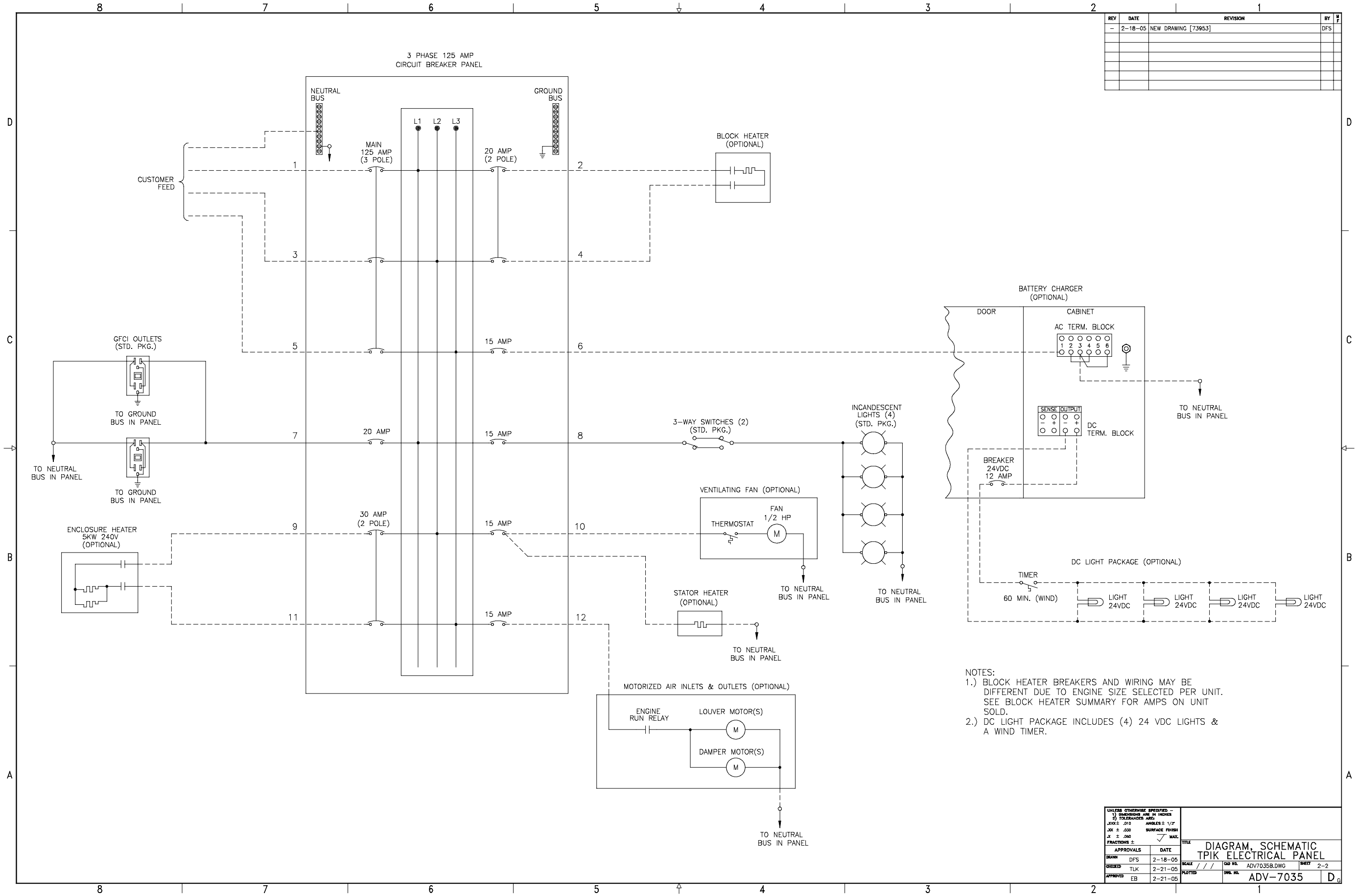

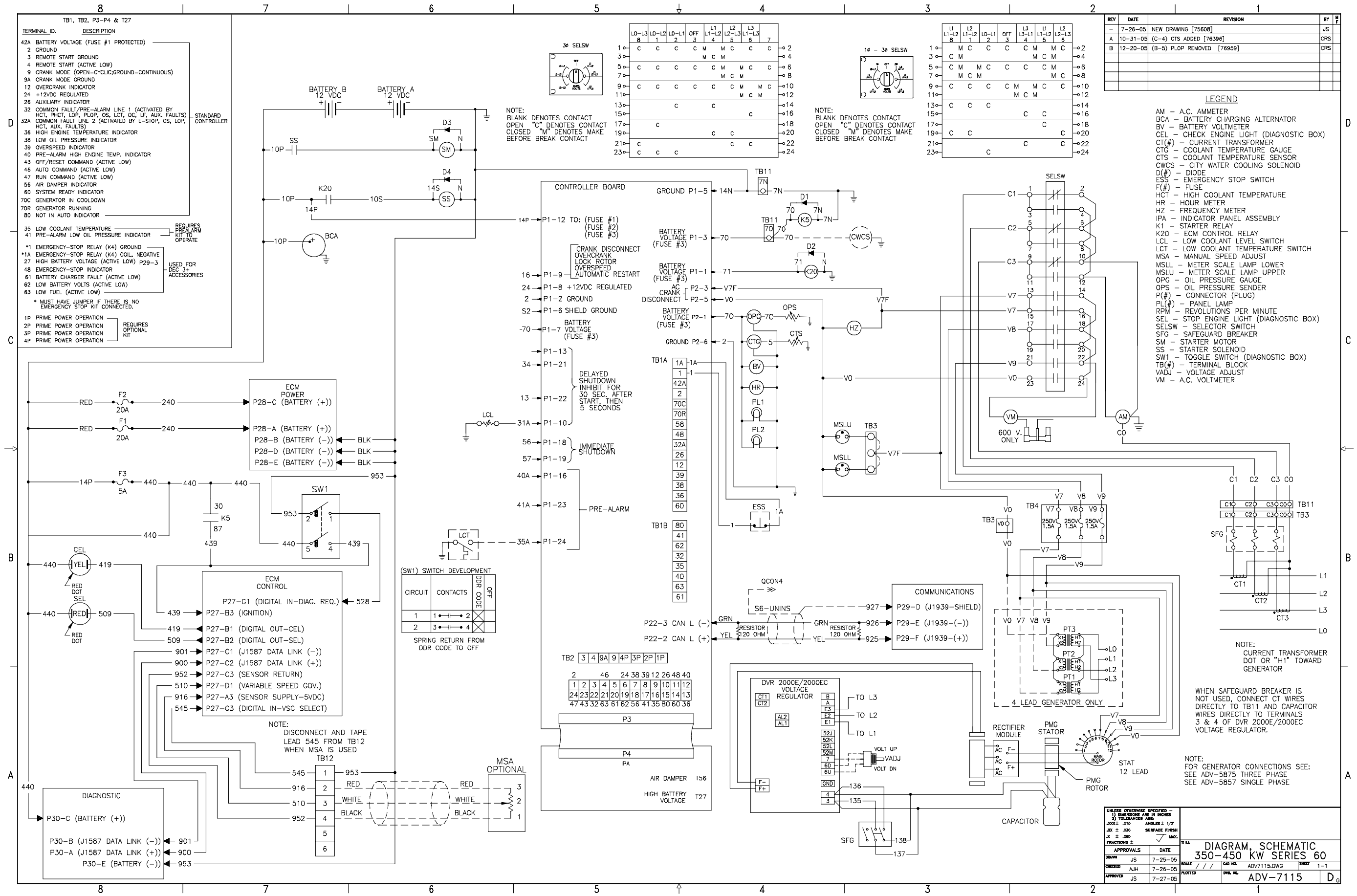

REV	DATE	REVISION	BY	M F
–	7–26–05	NEW DRAWING [75608]	JS	
A	10–31–05	(C–4) CTS ADDED [76396]	CRS	
B	12–20–05	(B–5) PLOP REMOVED [76959]	CRS	

LEGEND

AM – A.C. AMMETER
BCA – BATTERY CHARGING ALTERNATOR
BV – BATTERY VOLTMETER
CEL – CHECK ENGINE LIGHT (DIAGNOSTIC BOX)
CT(#) – CURRENT TRANSFORMER
CTG – COOLANT TEMPERATURE GAUGE
CTS – COOLANT TEMPERATURE SENSOR
CWCS – CITY WATER COOLING SOLENOID
D(#) – DIODE
ESS – EMERGENCY STOP SWITCH
F(#) – FUSE
HCT – HIGH COOLANT TEMPERATURE
HR – HOUR METER
HZ – FREQUENCY METER
IPA – INDICATOR PANEL ASSEMBLY
K1 – STARTER RELAY
K20 – ECM CONTROL RELAY
LCL – LOW COOLANT LEVEL SWITCH
LCT – LOW COOLANT TEMPERATURE SWITCH
MSA – MANUAL SPEED ADJUST
MSLL – METER SCALE LAMP LOWER
MSLU – METER SCALE LAMP UPPER
OPG – OIL PRESSURE GAUGE
OPS – OIL PRESSURE SENDER
P(#) – CONNECTOR (PLUG)
PL(#) – PANEL LAMP
RPM – REVOLUTIONS PER MINUTE
SEL – STOP ENGINE LIGHT (DIAGNOSTIC BOX)
SELSW – SELECTOR SWITCH
SFG – SAFEGUARD BREAKER
SM – STARTER MOTOR
SS – STARTER SOLENOID
SW1 – TOGGLE SWITCH (DIAGNOSTIC BOX)
TB(#) – TERMINAL BLOCK
VADJ – VOLTAGE ADJUST
VM – A.C. VOLTMETER

APPROVALS		DATE
DRAWN	JS	7–25–05
CHECKED	AJH	7–26–05
APPROVED	JS	7–27–05

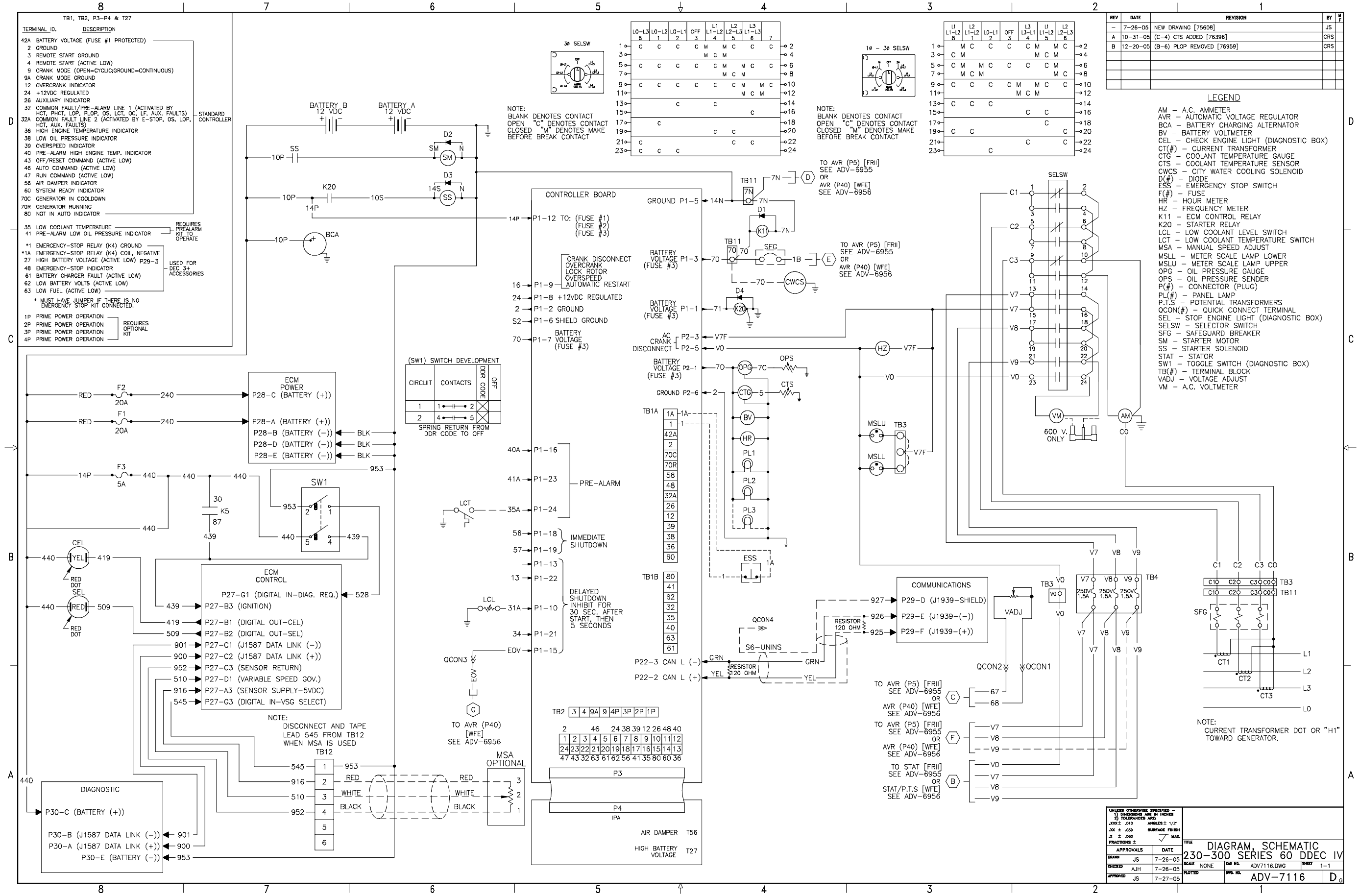

REV	DATE	REVISION	BY	M F
–	7-26-05	NEW DRAWING [75608]	JS	
A	10-31-05	(C-4) CTS ADDED [76396]	CRS	
B	12-20-05	(B-6) PLOP REMOVED [76959]	CRS	

LEGEND

AM – A.C. AMMETER
AVR – AUTOMATIC VOLTAGE REGULATOR
BCA – BATTERY CHARGING ALTERNATOR
BV – BATTERY VOLTMETER
CEL – CHECK ENGINE LIGHT (DIAGNOSTIC BOX)
CT(#) – CURRENT TRANSFORMER
CTG – COOLANT TEMPERATURE GAUGE
CTS – COOLANT TEMPERATURE SENSOR
CWCS – CITY WATER COOLING SOLENOID
D(#) – DIODE
ESS – EMERGENCY STOP SWITCH
F(#) – FUSE
HR – HOUR METER
HZ – FREQUENCY METER
K11 – ECM CONTROL RELAY
K20 – STARTER RELAY
LCL – LOW COOLANT LEVEL SWITCH
LCT – LOW COOLANT TEMPERATURE SWITCH
MSA – MANUAL SPEED ADJUST
MSLL – METER SCALE LAMP LOWER
MSLU – METER SCALE LAMP UPPER
OPG – OIL PRESSURE GAUGE
OPS – OIL PRESSURE SENDER
P(#) – CONNECTOR (PLUG)
PL(#) – PANEL LAMP
P.T.S – POTENTIAL TRANSFORMERS
QCON(#) – QUICK CONNECT TERMINAL
SEL – STOP ENGINE LIGHT (DIAGNOSTIC BOX)
SELSW – SELECTOR SWITCH
SFG – SAFEGUARD BREAKER
SM – STARTER MOTOR
SS – STARTER SOLENOID
STAT – STATOR
SW1 – TOGGLE SWITCH (DIAGNOSTIC BOX)
TB(#) – TERMINAL BLOCK
VADJ – VOLTAGE ADJUST
VM – A.C. VOLTMETER

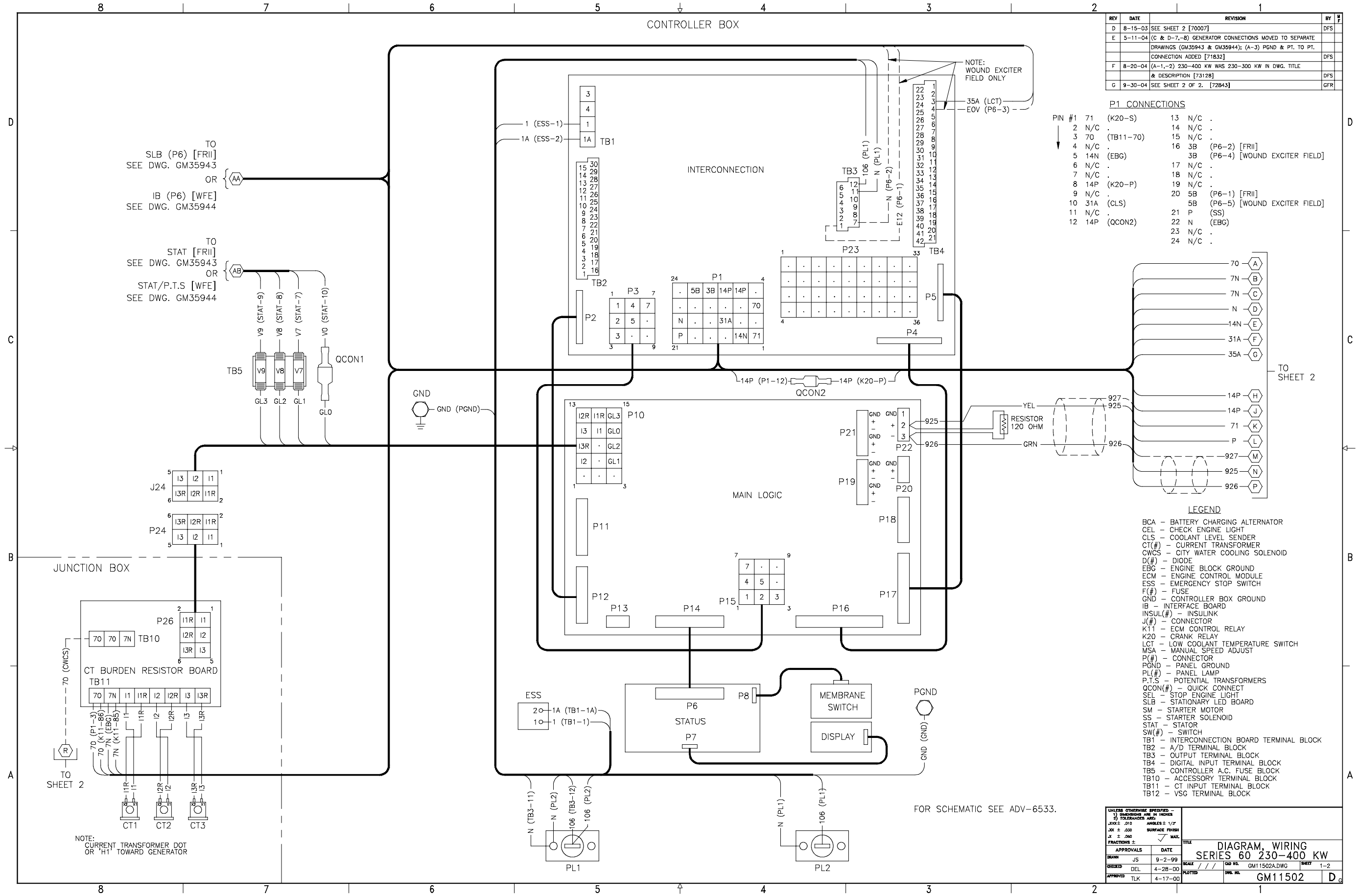

REV	DATE	REVISION	BY	M F
D	8-15-03	SEE SHEET 2 [70007]	DFS	
E	5-11-04	(C & D-7,-8) GENERATOR CONNECTIONS MOVED TO SEPARATE		
		DRAWINGS (GM35943 & GM35944); (A-3) PGND & PT. TO PT.		
		CONNECTION ADDED [71832]	DFS	
F	8-20-04	(A-1,-2) 230-400 KW WAS 230-300 KW IN DWG. TITLE		
		& DESCRIPTION [73128]	DFS	
G	9-30-04	SEE SHEET 2 OF 2. [72843]	GFR	

P1 CONNECTIONS

PIN					
#1	71	(K20-S)	13	N/C	.
2	N/C	.	14	N/C	.
3	70	(TB11-70)	15	N/C	.
4	N/C	.	16	3B	(P6-2) [FRII]
5	14N	(EBG)		3B	(P6-4) [WOUND EXCITER FIELD]
6	N/C	.	17	N/C	.
7	N/C	.	18	N/C	.
8	14P	(K20-P)	19	N/C	.
9	N/C	.	20	5B	(P6-1) [FRII]
10	31A	(CLS)		5B	(P6-5) [WOUND EXCITER FIELD]
11	N/C	.	21	P	(SS)
12	14P	(QCON2)	22	N	(EBG)
			23	N/C	.
			24	N/C	.

LEGEND

BCA – BATTERY CHARGING ALTERNATOR
CEL – CHECK ENGINE LIGHT
CLS – COOLANT LEVEL SENDER
CT(#) – CURRENT TRANSFORMER
CWCS – CITY WATER COOLING SOLENOID
D(#) – DIODE
EBG – ENGINE BLOCK GROUND
ECM – ENGINE CONTROL MODULE
ESS – EMERGENCY STOP SWITCH
F(#) – FUSE
GND – CONTROLLER BOX GROUND
IB – INTERFACE BOARD
INSUL(#) – INSULINK
J(#) – CONNECTOR
K11 – ECM CONTROL RELAY
K20 – CRANK RELAY
LCT – LOW COOLANT TEMPERATURE SWITCH
MSA – MANUAL SPEED ADJUST
P(#) – CONNECTOR
PGND – PANEL GROUND
PL(#) – PANEL LAMP
P.T.S – POTENTIAL TRANSFORMERS
QCON(#) – QUICK CONNECT
SEL – STOP ENGINE LIGHT
SLB – STATIONARY LED BOARD
SM – STARTER MOTOR
SS – STARTER SOLENOID
STAT – STATOR
SW(#) – SWITCH
TB1 – INTERCONNECTION BOARD TERMINAL BLOCK
TB2 – A/D TERMINAL BLOCK
TB3 – OUTPUT TERMINAL BLOCK
TB4 – DIGITAL INPUT TERMINAL BLOCK
TB5 – CONTROLLER A.C. FUSE BLOCK
TB10 – ACCESSORY TERMINAL BLOCK
TB11 – CT INPUT TERMINAL BLOCK
TB12 – VSG TERMINAL BLOCK

UNLESS OTHERWISE SPECIFIED: – 1) DIMENSIONS ARE IN INCHES 2) TOLERANCES ARE: .XXX ± .010 ANGLES ± 1/2° .XX ± .030 SURFACE FINISH .X ± .060 ✓ MAX. FRACTIONS ±

APPROVALS		DATE
DRAWN	JS	9-2-99
CHECKED	DEL	4-28-00
APPROVED	TLK	4-17-00

TITLE DIAGRAM, WIRING SERIES 60 230-400 KW
SCALE / / / CAD NO. GM11502A.DWG SHEET 1-2
PLOTTED DWG. NO. GM11502 D

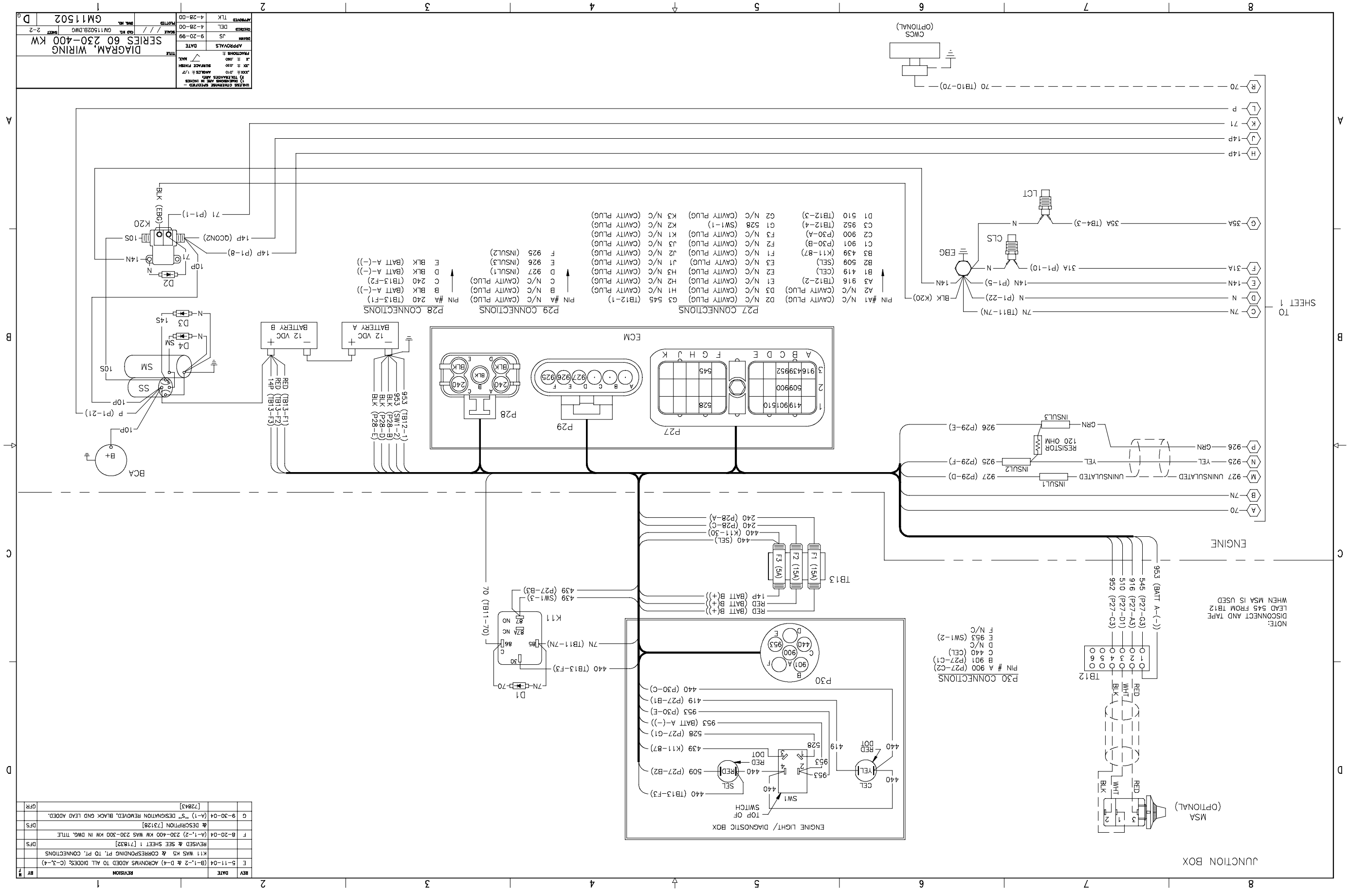

REV	DATE	REVISION	BY
E	5–11–04	(B–1,–2 & D–4) ACRONYMS ADDED TO ALL DIODES; (C–3,–4) K11 WAS K5 & CORRESPONDING PL TO PL CONNECTIONS	DFS
		REVISED & SEE SHEET 1 [71832]	
F	8–20–04	(A–1,–2) 230–400 KW WAS 230–300 KW IN DWG. TITLE & DESCRIPTION [73128]	DFS
G	9–30–04	(A–1) "S" DESIGNATION REMOVED. BLACK GND LEAD ADDED. [72843]	GFR

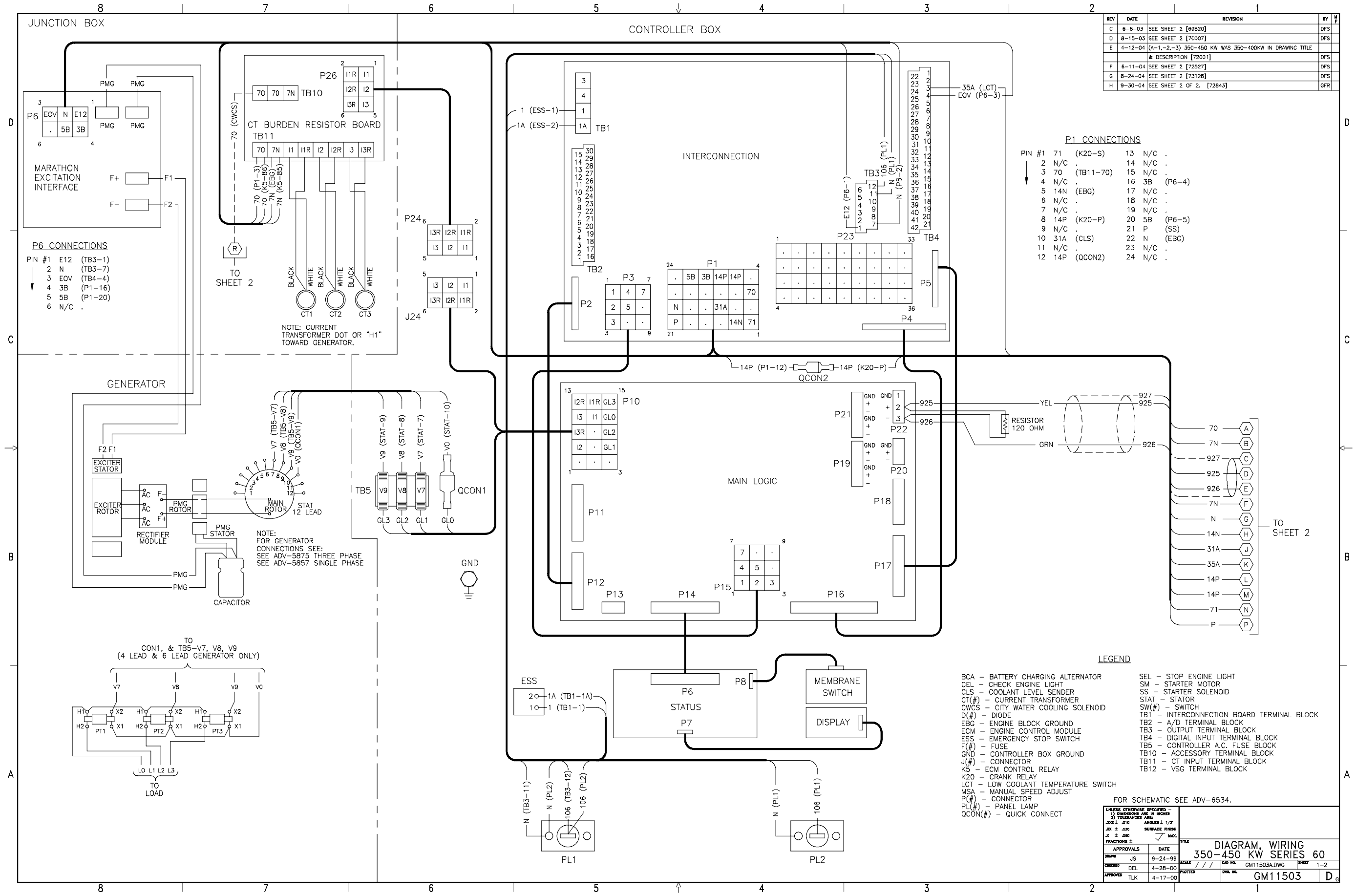

REV	DATE	REVISION	BY	M F
C	6-6-03	SEE SHEET 2 [69820]	DFS	
D	8-15-03	SEE SHEET 2 [70007]	DFS	
E	4-12-04	(A-1,-2,-3) 350-450 KW WAS 350-400KW IN DRAWING TITLE		
		& DESCRIPTION [72001]	DFS	
F	6-11-04	SEE SHEET 2 [72527]	DFS	
G	8-24-04	SEE SHEET 2 [73128]	DFS	
H	9-30-04	SEE SHEET 2 OF 2. [72843]	GFR	

APPROVALS		DATE
DRAWN	JS	9-24-99
CHECKED	DEL	4-28-00
APPROVED	TLK	4-17-00

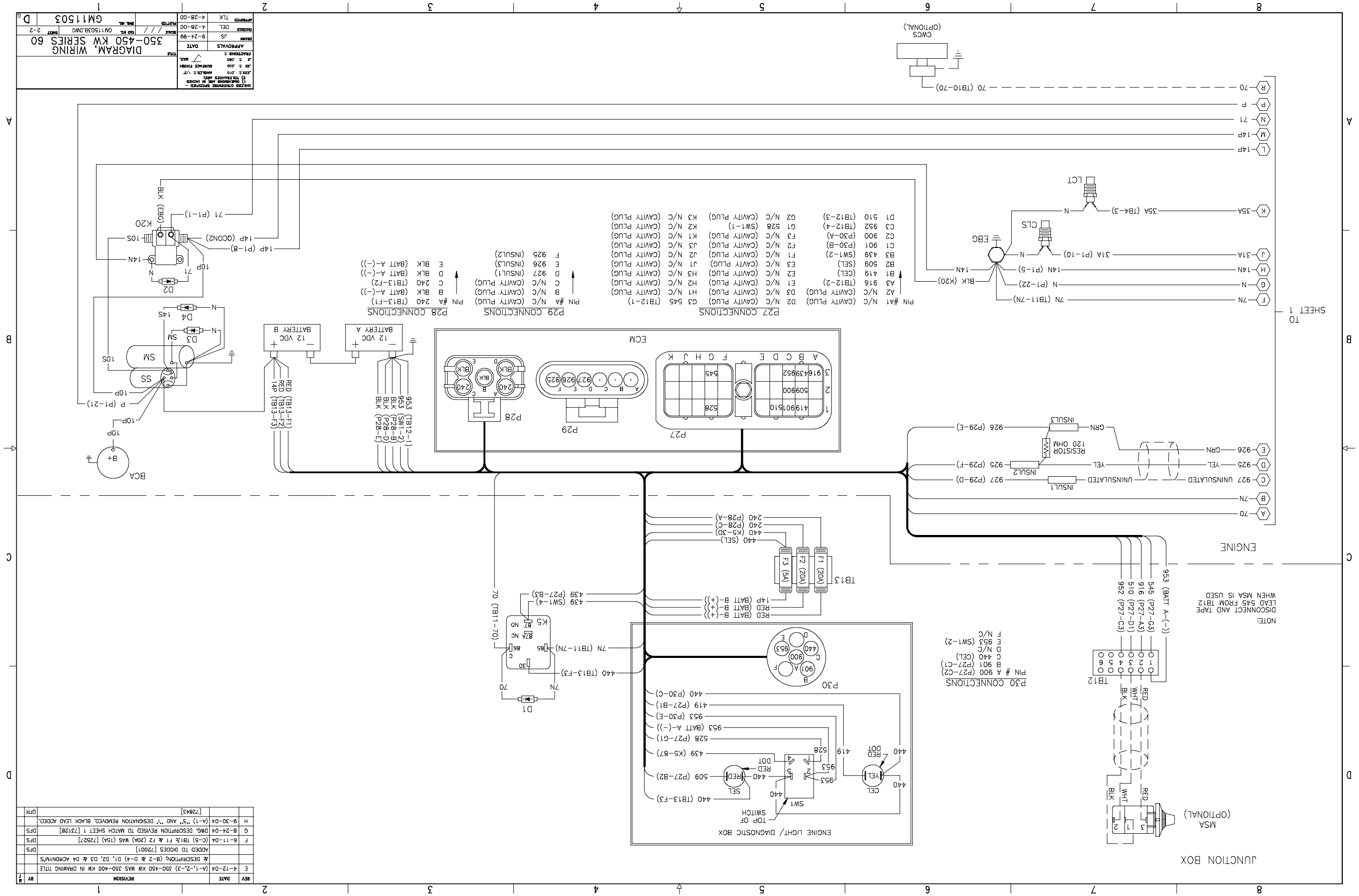

REV	DATE	REVISION	BY
E	4-12-04	(A-1,-2,-3) 350-450 KW WAS 350-400 KW IN DRAWING TITLE & DESCRIPTION; (B-2 & D-4) D1, D2, D3 & D4 ACRONYMS ADDED TO DIODES [72001]	DFS
F	6-11-04	(C-5) TB13: F1 & F2 (20A) WAS (15A) [72527]	DFS
G	8-24-04	DWG. DESCRIPTION REVISED TO MATCH SHEET 1 [73128]	DFS
H	9-30-04	(A-1) "S" AND "I" DESIGNATION REMOVED, BLACK LEAD ADDED. [72843]	GFR

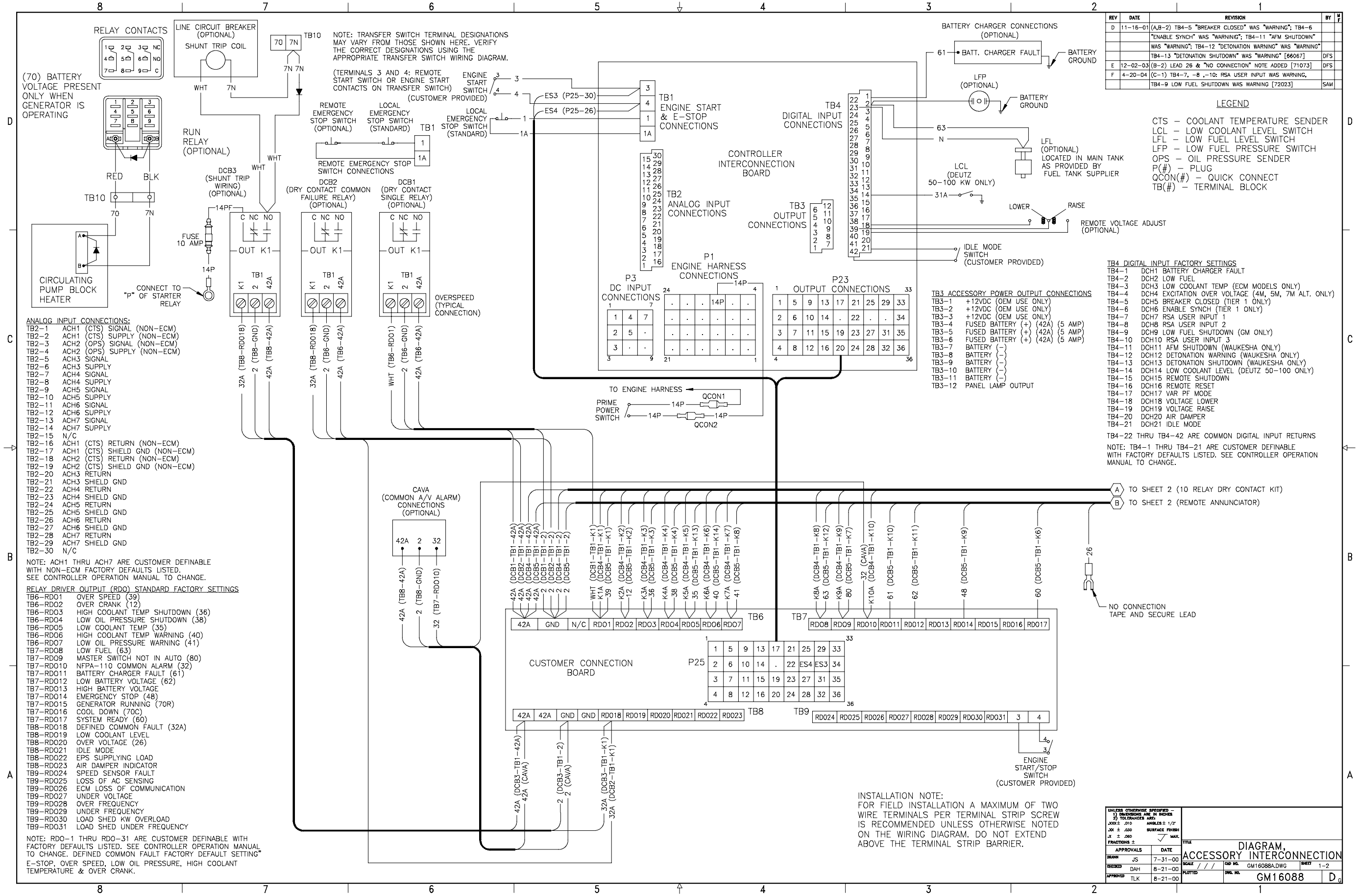

REV	DATE	REVISION	BY	M F
D	11-16-01	(A,B-2) TB4-5 "BREAKER CLOSED" WAS "WARNING"; TB4-6		
		"ENABLE SYNCH" WAS "WARNING"; TB4-11 "AFM SHUTDOWN"		
		WAS "WARNING"; TB4-12 "DETONATION WARNING" WAS "WARNING"		
		TB4-13 "DETONATION SHUTDOWN" WAS "WARNING" [66067]	DFS	
E	12-02-03	(B-2) LEAD 26 & "NO CONNECTION" NOTE ADDED [71073]	DFS	
F	4-20-04	(C-1) TB4-7, -8 ,-10: RSA USER INPUT WAS WARNING.		
		TB4-9 LOW FUEL SHUTDOWN WAS WARNING [72023]	SAM	

LEGEND

CTS – COOLANT TEMPERATURE SENDER
LCL – LOW COOLANT LEVEL SWITCH
LFL – LOW FUEL LEVEL SWITCH
LFP – LOW FUEL PRESSURE SWITCH
OPS – OIL PRESSURE SENDER
P(#) – PLUG
QCON(#) – QUICK CONNECT
TB(#) – TERMINAL BLOCK

ANALOG INPUT CONNECTIONS:

TB2-1 ACH1 (CTS) SIGNAL (NON-ECM)
TB2-2 ACH1 (CTS) SUPPLY (NON-ECM)
TB2-3 ACH2 (OPS) SIGNAL (NON-ECM)
TB2-4 ACH2 (OPS) SUPPLY (NON-ECM)
TB2-5 ACH3 SIGNAL
TB2-6 ACH3 SUPPLY
TB2-7 ACH4 SIGNAL
TB2-8 ACH4 SUPPLY
TB2-9 ACH5 SIGNAL
TB2-10 ACH5 SUPPLY
TB2-11 ACH6 SIGNAL
TB2-12 ACH6 SUPPLY
TB2-13 ACH7 SIGNAL
TB2-14 ACH7 SUPPLY
TB2-15 N/C
TB2-16 ACH1 (CTS) RETURN (NON-ECM)
TB2-17 ACH1 (CTS) SHIELD GND (NON-ECM)
TB2-18 ACH2 (CTS) RETURN (NON-ECM)
TB2-19 ACH2 (CTS) SHIELD GND (NON-ECM)
TB2-20 ACH3 RETURN
TB2-21 ACH3 SHIELD GND
TB2-22 ACH4 RETURN
TB2-23 ACH4 SHIELD GND
TB2-24 ACH5 RETURN
TB2-25 ACH5 SHIELD GND
TB2-26 ACH6 RETURN
TB2-27 ACH6 SHIELD GND
TB2-28 ACH7 RETURN
TB2-29 ACH7 SHIELD GND
TB2-30 N/C

NOTE: ACH1 THRU ACH7 ARE CUSTOMER DEFINABLE WITH NON-ECM FACTORY DEFAULTS LISTED. SEE CONTROLLER OPERATION MANUAL TO CHANGE.

RELAY DRIVER OUTPUT (RDO) STANDARD FACTORY SETTINGS

TB6-RDO1 OVER SPEED (39)
TB6-RDO2 OVER CRANK (12)
TB6-RDO3 HIGH COOLANT TEMP SHUTDOWN (36)
TB6-RDO4 LOW OIL PRESSURE SHUTDOWN (38)
TB6-RDO5 LOW COOLANT TEMP (35)
TB6-RDO6 HIGH COOLANT TEMP WARNING (40)
TB6-RDO7 LOW OIL PRESSURE WARNING (41)
TB7-RDO8 LOW FUEL (63)
TB7-RDO9 MASTER SWITCH NOT IN AUTO (80)
TB7-RDO10 NFPA-110 COMMON ALARM (32)
TB7-RDO11 BATTERY CHARGER FAULT (61)
TB7-RDO12 LOW BATTERY VOLTAGE (62)
TB7-RDO13 HIGH BATTERY VOLTAGE
TB7-RDO14 EMERGENCY STOP (48)
TB7-RDO15 GENERATOR RUNNING (70R)
TB7-RDO16 COOL DOWN (70C)
TB7-RDO17 SYSTEM READY (60)
TB8-RDO18 DEFINED COMMON FAULT (32A)
TB8-RDO19 LOW COOLANT LEVEL
TB8-RDO20 OVER VOLTAGE (26)
TB8-RDO21 IDLE MODE
TB8-RDO22 EPS SUPPLYING LOAD
TB8-RDO23 AIR DAMPER INDICATOR
TB9-RDO24 SPEED SENSOR FAULT
TB9-RDO25 LOSS OF AC SENSING
TB9-RDO26 ECM LOSS OF COMMUNICATION
TB9-RDO27 UNDER VOLTAGE
TB9-RDO28 OVER FREQUENCY
TB9-RDO29 UNDER FREQUENCY
TB9-RDO30 LOAD SHED KW OVERLOAD
TB9-RDO31 LOAD SHED UNDER FREQUENCY

NOTE: RDO-1 THRU RDO-31 ARE CUSTOMER DEFINABLE WITH FACTORY DEFAULTS LISTED. SEE CONTROLLER OPERATION MANUAL TO CHANGE. DEFINED COMMON FAULT FACTORY DEFAULT SETTING" E-STOP, OVER SPEED, LOW OIL PRESSURE, HIGH COOLANT TEMPERATURE & OVER CRANK.

TB3 ACCESSORY POWER OUTPUT CONNECTIONS

TB3-1 +12VDC (OEM USE ONLY)
TB3-2 +12VDC (OEM USE ONLY)
TB3-3 +12VDC (OEM USE ONLY)
TB3-4 FUSED BATTERY (+) (42A) (5 AMP)
TB3-5 FUSED BATTERY (+) (42A) (5 AMP)
TB3-6 FUSED BATTERY (+) (42A) (5 AMP)
TB3-7 BATTERY (–)
TB3-8 BATTERY (–)
TB3-9 BATTERY (–)
TB3-10 BATTERY (–)
TB3-11 BATTERY (–)
TB3-12 PANEL LAMP OUTPUT

TB4 DIGITAL INPUT FACTORY SETTINGS

TB4-1 DCH1 BATTERY CHARGER FAULT
TB4-2 DCH2 LOW FUEL
TB4-3 DCH3 LOW COOLANT TEMP (ECM MODELS ONLY)
TB4-4 DCH4 EXCITATION OVER VOLTAGE (4M, 5M, 7M ALT. ONLY)
TB4-5 DCH5 BREAKER CLOSED (TIER 1 ONLY)
TB4-6 DCH6 ENABLE SYNCH (TIER 1 ONLY)
TB4-7 DCH7 RSA USER INPUT 1
TB4-8 DCH8 RSA USER INPUT 2
TB4-9 DCH9 LOW FUEL SHUTDOWN (GM ONLY)
TB4-10 DCH10 RSA USER INPUT 3
TB4-11 DCH11 AFM SHUTDOWN (WAUKESHA ONLY)
TB4-12 DCH12 DETONATION WARNING (WAUKESHA ONLY)
TB4-13 DCH13 DETONATION SHUTDOWN (WAUKESHA ONLY)
TB4-14 DCH14 LOW COOLANT LEVEL (DEUTZ 50-100 ONLY)
TB4-15 DCH15 REMOTE SHUTDOWN
TB4-16 DCH16 REMOTE RESET
TB4-17 DCH17 VAR PF MODE
TB4-18 DCH18 VOLTAGE LOWER
TB4-19 DCH19 VOLTAGE RAISE
TB4-20 DCH20 AIR DAMPER
TB4-21 DCH21 IDLE MODE

TB4-22 THRU TB4-42 ARE COMMON DIGITAL INPUT RETURNS

NOTE: TB4-1 THRU TB4-21 ARE CUSTOMER DEFINABLE WITH FACTORY DEFAULTS LISTED. SEE CONTROLLER OPERATION MANUAL TO CHANGE.

INSTALLATION NOTE:
FOR FIELD INSTALLATION A MAXIMUM OF TWO WIRE TERMINALS PER TERMINAL STRIP SCREW IS RECOMMENDED UNLESS OTHERWISE NOTED ON THE WIRING DIAGRAM. DO NOT EXTEND ABOVE THE TERMINAL STRIP BARRIER.

UNLESS OTHERWISE SPECIFIED – 1) DIMENSIONS ARE IN INCHES 2) TOLERANCES ARE:
.XXX ± .010 ANGLES ± 1/2°
.XX ± .030 SURFACE FINISH
.X ± .060 √ MAX.
FRACTIONS ±

APPROVALS		DATE
DRAWN	JS	7-31-00
CHECKED	DAH	8-21-00
APPROVED	TLK	8-21-00

TITLE DIAGRAM, ACCESSORY INTERCONNECTION
SCALE / / / CAD NO. GM16088A.DWG SHEET 1-2
PLOTTED DWG. NO. GM16088 D

REV	DATE	REVISION	BY	M F
B	7-6-01	(C-2-5) OPTIONAL OUTPUTS K3 THRU K10 RENAMED; SEE	JS	
		SHEET 1 [64768]		
C	8-15-01	SEE SHEET 1 OF 2 [65037]	DFS	
D	11-16-01	SEE SHEET 1 OF 2 [66067]	DFS	
E	12-2-03	(C-3) LEAD 26 & "NO CONNECTION" NOTE ADDED [71073]	DFS	
F	4-20-04	(A-4) LEAD CONNECTION NOTE UPDATED [72023]	SAM	

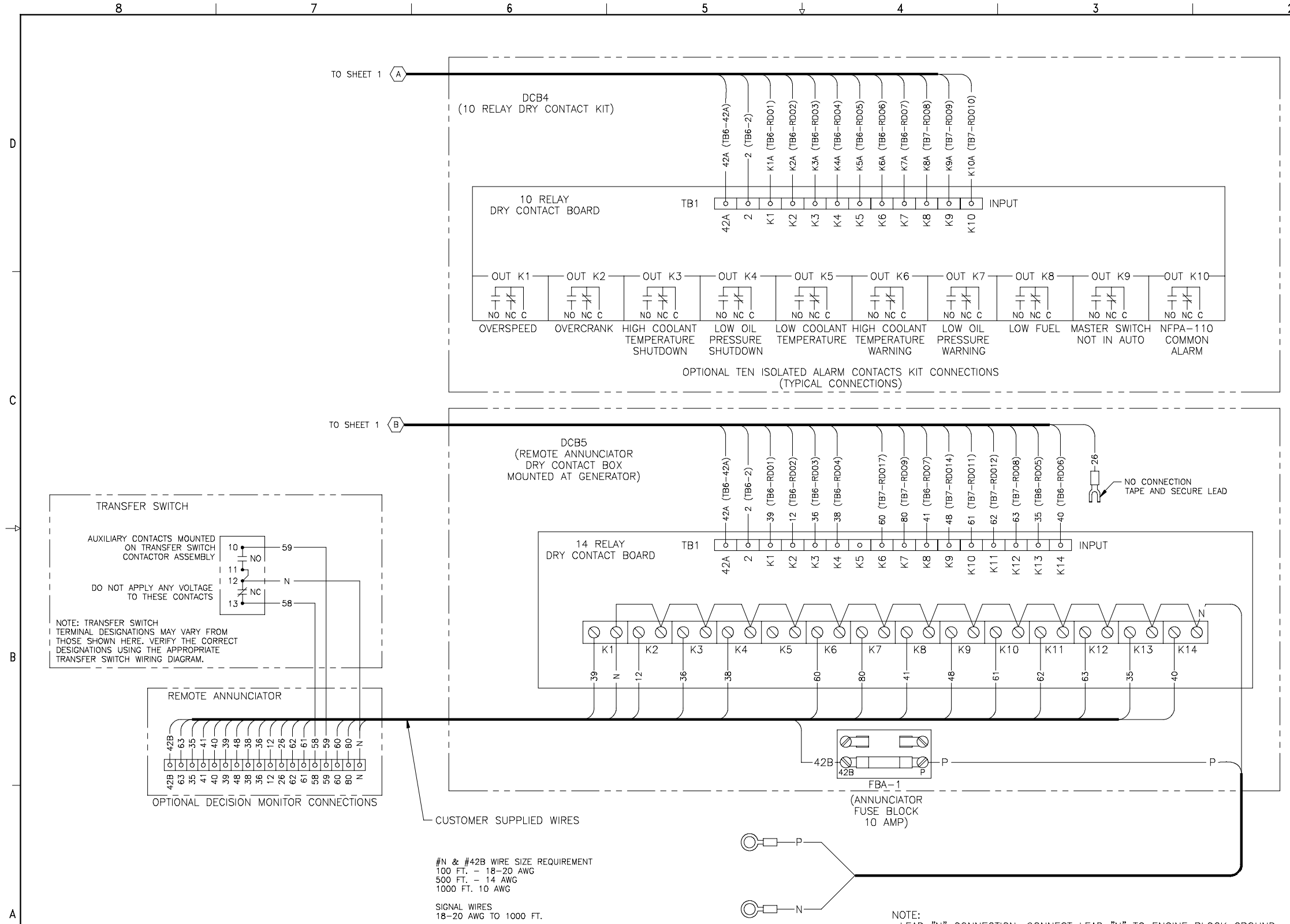

#N & #42B WIRE SIZE REQUIREMENT
100 FT. – 18-20 AWG
500 FT. – 14 AWG
1000 FT. 10 AWG

SIGNAL WIRES
18-20 AWG TO 1000 FT.

NOTE: IF ADDITIONAL LOAD IS ADDED RESIZE N & 42B AS REQUIRED

NOTE:
LEAD "N" CONNECTION: CONNECT LEAD "N" TO ENGINE BLOCK GROUND.
LEAD "P" CONNECTION:
PREFERRED– CONNECT LEAD "P" TO TERMINAL WITH "P" WIRES ON CRANK RELAY.
ALTERNATE – CONNECT LEAD "P" TO BATTERY POSITIVE (+) TERMINAL ON STARTER SOLENOID.
USE WIRE HARNESS PROVIDED, CUT AND TERMINATE AS REQUIRED.

INSTALLATION NOTE:
FOR FIELD INSTALLATION A MAXIMUM OF TWO WIRE TERMINALS PER TERMINAL STRIP SCREW IS RECOMMENDED UNLESS OTHERWISE NOTED ON THE WIRING DIAGRAM. DO NOT EXTEND ABOVE THE TERMINAL STRIP BARRIER.

UNLESS OTHERWISE SPECIFIED – 1) DIMENSIONS ARE IN INCHES 2) TOLERANCES ARE:
.XXX ± .010 ANGLES ± 1/2°
.XX ± .030 SURFACE FINISH
.X ± .060 √ MAX.
FRACTIONS ±

APPROVALS		DATE
DRAWN	JS	8-1-00
CHECKED	DAH	8-21-00
APPROVED	TLK	8-21-00

TITLE DIAGRAM ACCESSORY INTERCONNECTION
SCALE / / / CAD DWG. GM16088B.DWG SHEET 2-2
PLOTTED DWG. NO. GM16088 D

REV	DATE	REVISION	BY	M F
–	9–28–00	NEW DRAWING [63055]	JS	
A	5–17–04	(B & C–7,–8) GENERATOR CONNECTIONS MOVED TO SEPARATE		
		DRAWINGS (GM35943 & GM35944) [71832]	DFS	
B	8–25–04	SE SHEET 2 OF 2. [72843]	GFR	

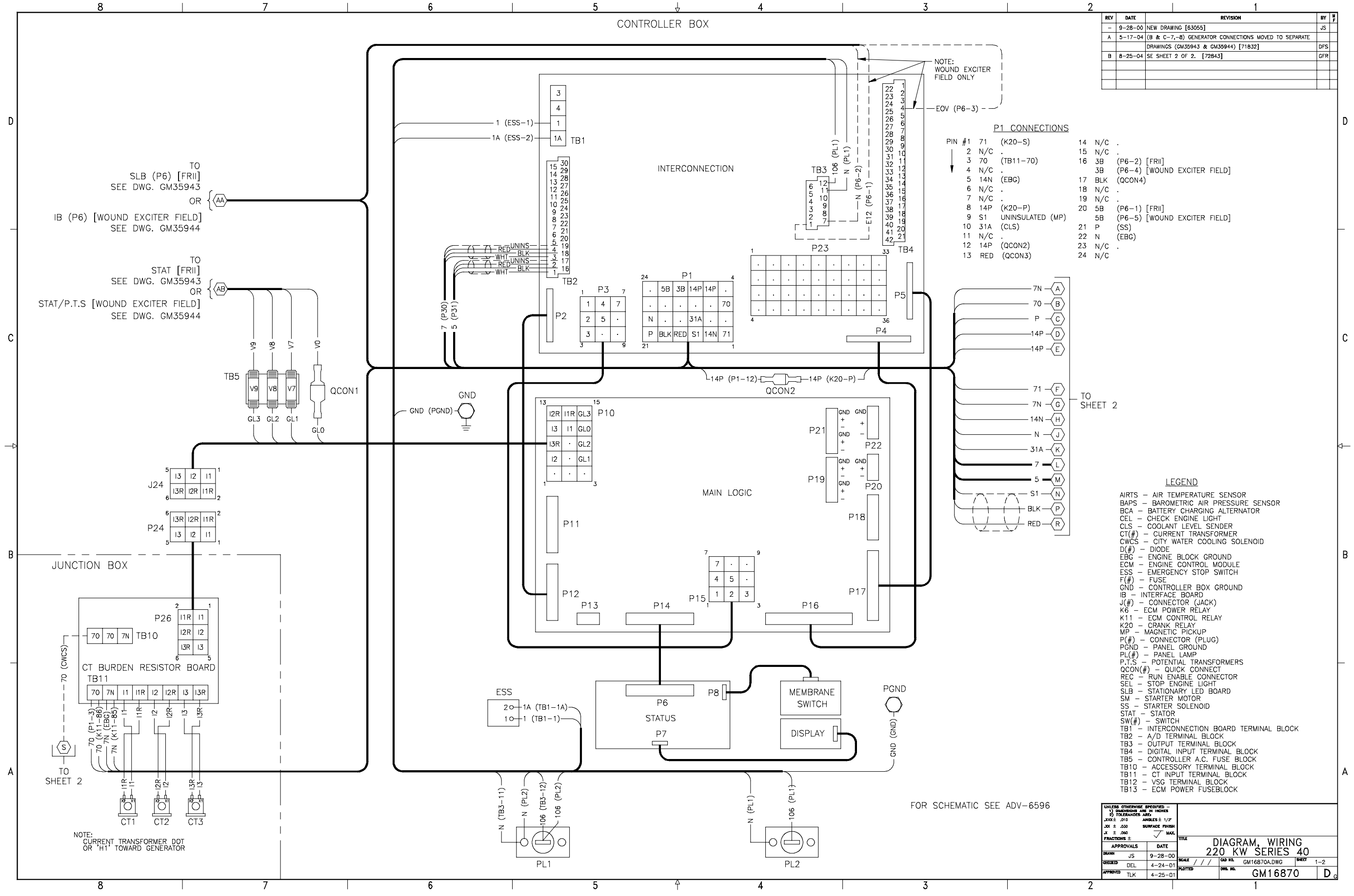

P1 CONNECTIONS

PIN					
#1	71	(K20–S)	14	N/C	.
2	N/C	.	15	N/C	.
3	70	(TB11–70)	16	3B	(P6–2) [FRII]
4	N/C	.		3B	(P6–4) [WOUND EXCITER FIELD]
5	14N	(EBG)	17	BLK	(QCON4)
6	N/C	.	18	N/C	.
7	N/C	.	19	N/C	.
8	14P	(K20–P)	20	5B	(P6–1) [FRII]
9	S1	UNINSULATED (MP)		5B	(P6–5) [WOUND EXCITER FIELD]
10	31A	(CLS)	21	P	(SS)
11	N/C	.	22	N	(EBG)
12	14P	(QCON2)	23	N/C	.
13	RED	(QCON3)	24	N/C	

LEGEND

AIRTS – AIR TEMPERATURE SENSOR
BAPS – BAROMETRIC AIR PRESSURE SENSOR
BCA – BATTERY CHARGING ALTERNATOR
CEL – CHECK ENGINE LIGHT
CLS – COOLANT LEVEL SENDER
CT(#) – CURRENT TRANSFORMER
CWCS – CITY WATER COOLING SOLENOID
D(#) – DIODE
EBG – ENGINE BLOCK GROUND
ECM – ENGINE CONTROL MODULE
ESS – EMERGENCY STOP SWITCH
F(#) – FUSE
GND – CONTROLLER BOX GROUND
IB – INTERFACE BOARD
J(#) – CONNECTOR (JACK)
K6 – ECM POWER RELAY
K11 – ECM CONTROL RELAY
K20 – CRANK RELAY
MP – MAGNETIC PICKUP
P(#) – CONNECTOR (PLUG)
PGND – PANEL GROUND
PL(#) – PANEL LAMP
P.T.S – POTENTIAL TRANSFORMERS
QCON(#) – QUICK CONNECT
REC – RUN ENABLE CONNECTOR
SEL – STOP ENGINE LIGHT
SLB – STATIONARY LED BOARD
SM – STARTER MOTOR
SS – STARTER SOLENOID
STAT – STATOR
SW(#) – SWITCH
TB1 – INTERCONNECTION BOARD TERMINAL BLOCK
TB2 – A/D TERMINAL BLOCK
TB3 – OUTPUT TERMINAL BLOCK
TB4 – DIGITAL INPUT TERMINAL BLOCK
TB5 – CONTROLLER A.C. FUSE BLOCK
TB10 – ACCESSORY TERMINAL BLOCK
TB11 – CT INPUT TERMINAL BLOCK
TB12 – VSG TERMINAL BLOCK
TB13 – ECM POWER FUSEBLOCK

UNLESS OTHERWISE SPECIFIED – 1) DIMENSIONS ARE IN INCHES 2) TOLERANCES ARE: .XXX ± .010 ANGLES ± 1/2° .XX ± .030 SURFACE FINISH .X ± .060 ✓ MAX. FRACTIONS ±

APPROVALS		DATE
DRAWN	JS	9–28–00
CHECKED	DEL	4–24–01
APPROVED	TLK	4–25–01
PLOTTED		

SCALE / / /

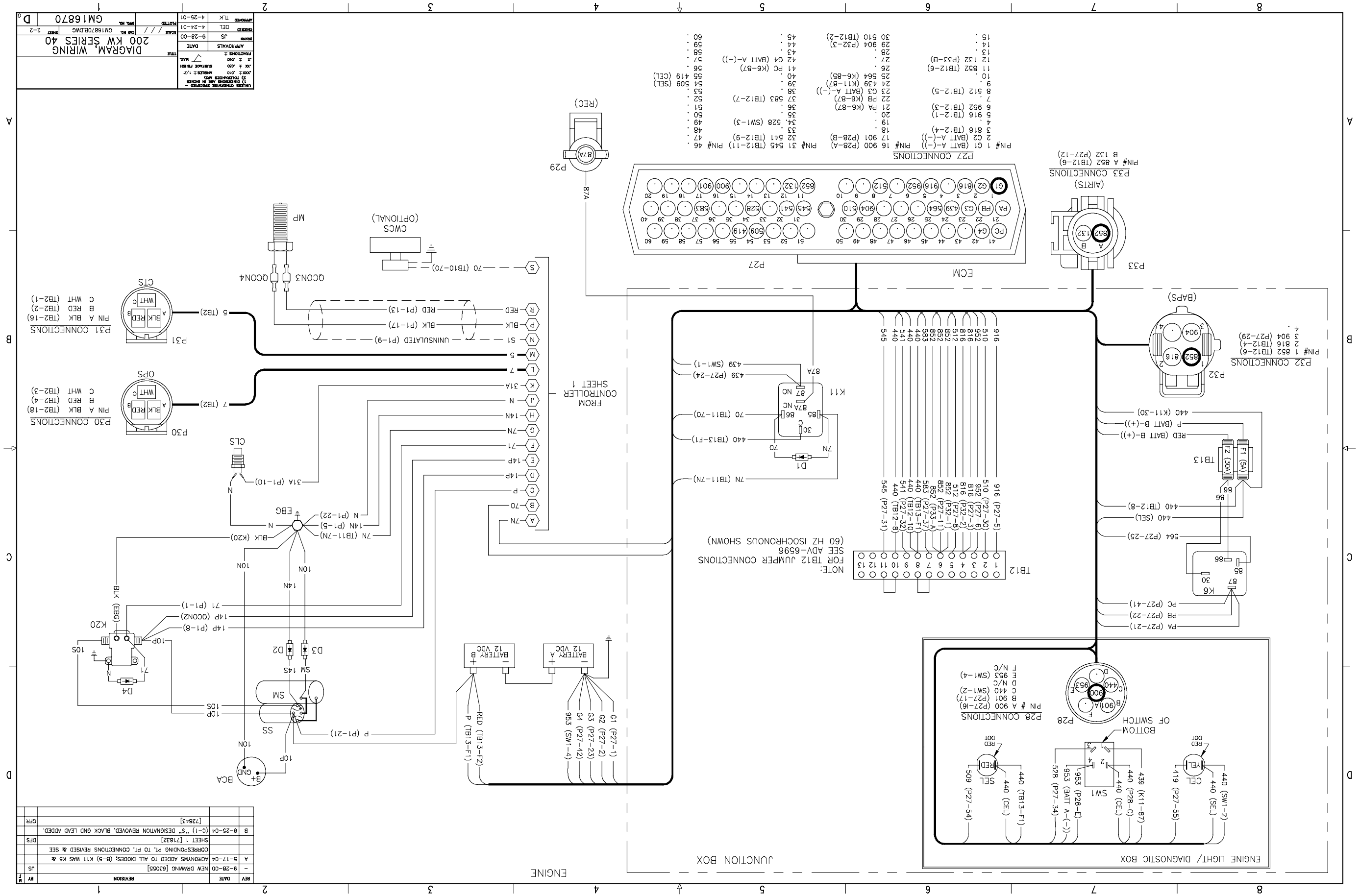

REV	DATE	REVISION	BY	U/F
–	9-28-00	NEW DRAWING [63059]	JS	
A	5-17-04	ACRONYMS ADDED TO ALL DIODES; (B-5) K11 WAS K5 & CORRESPONDING PT. TO PT. CONNECTIONS REVISED & SEE SHEET 1 [71832]	DFS	
B	8-25-04	(C-1) "S" DESIGNATION REMOVED. BLACK GND LEAD ADDED. [72843]	GFR	

HAZARD OTHERWISE SPECIFIED –
1) DIMENSIONS ARE IN INCHES
2) TOLERANCES ASS
.XXX ± .010 ANGLES ± 1/2°
.XX ± .030 SURFACE FINISH
.X ± .060 ∠ MAC
FRACTIONS ±

DRAWN	JS	9-28-00
APPROVALS		DATE
CHECKED	DEL	4-24-01
APPROVED	TLK	4-25-01

TITLE DIAGRAM, WIRING
200 KW SERIES 40

SCALE / / / | CAD NO. GM16870BDMC | SHEET 2-2
MATTER | DWG. NO. GM16870 | D

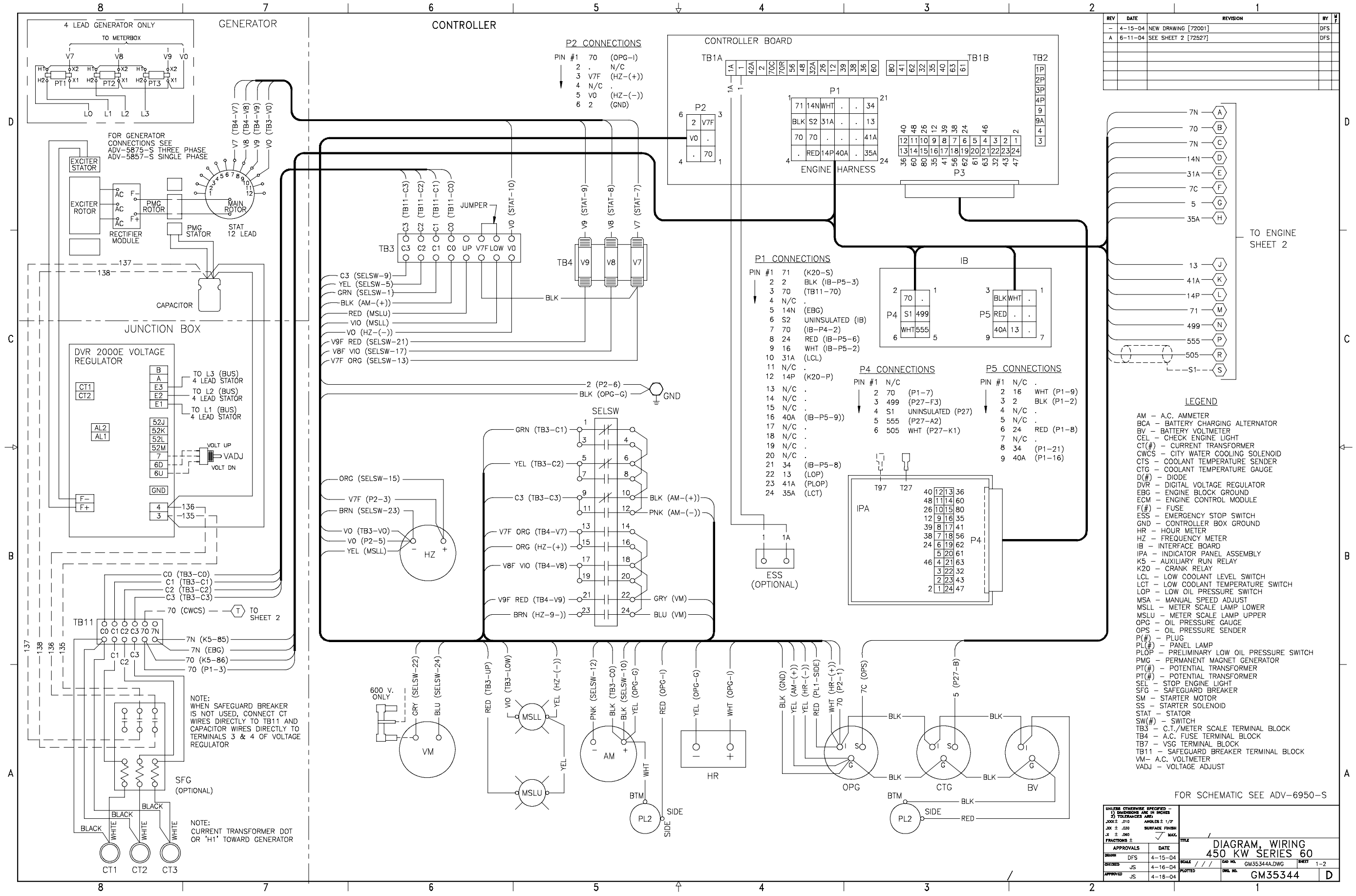

REV	DATE	REVISION	BY	M F
–	4-15-04	NEW DRAWING [72001]	DFS	
A	6-11-04	SEE SHEET 2 [72527]	DFS	

REV	DATE	REVISION	BY	M F
–	4–14–04	NEW DRAWING [72001]	DFS	
A	6–11–04	(C–5) F1 & F2: (20A) WAS (15A) [72527]	DFS	

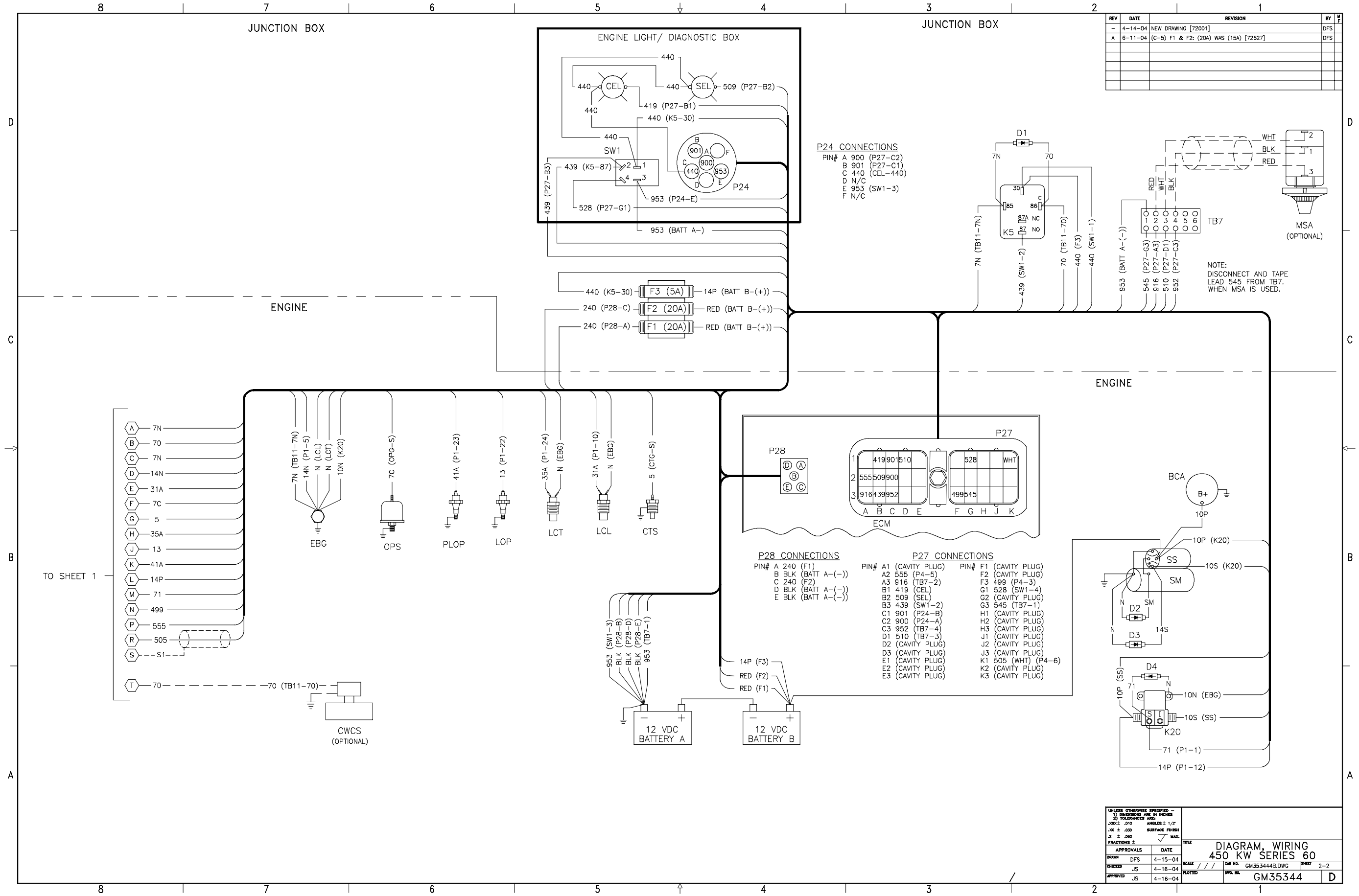

REV	DATE	REVISION	BY	M/F
–	4–30–04	NEW DRAWING [71832]	DFS	
A	10–27–04	(C–5,–6) SSEN TYPE 2 ADDED [73348]	DFS	
B	12–10–04	(A–1,–2) "FOR SCHEMATIC" NOTE ADDED [73930]	DFS	
C	11–30–05	(B–7) AVR (P5) VIEW CORRECTED [76420]	CRS	
D	6–29–06	(C–2) "NON–ECM ONLY" NOTE ADDED [78676]	CRS	

LEGEND

AVR – AUTOMATIC VOLTAGE REGULATOR
P(#) – PLUG
PMG – PERMANENT MAGNET GENERATOR
RRA – ROTATING RECTIFIER ASSEMBLY
SLB – STATIONARY LIGHT EMITTING DIODE BOARD
SSEN – SPEED SENSOR
STAT – STATOR

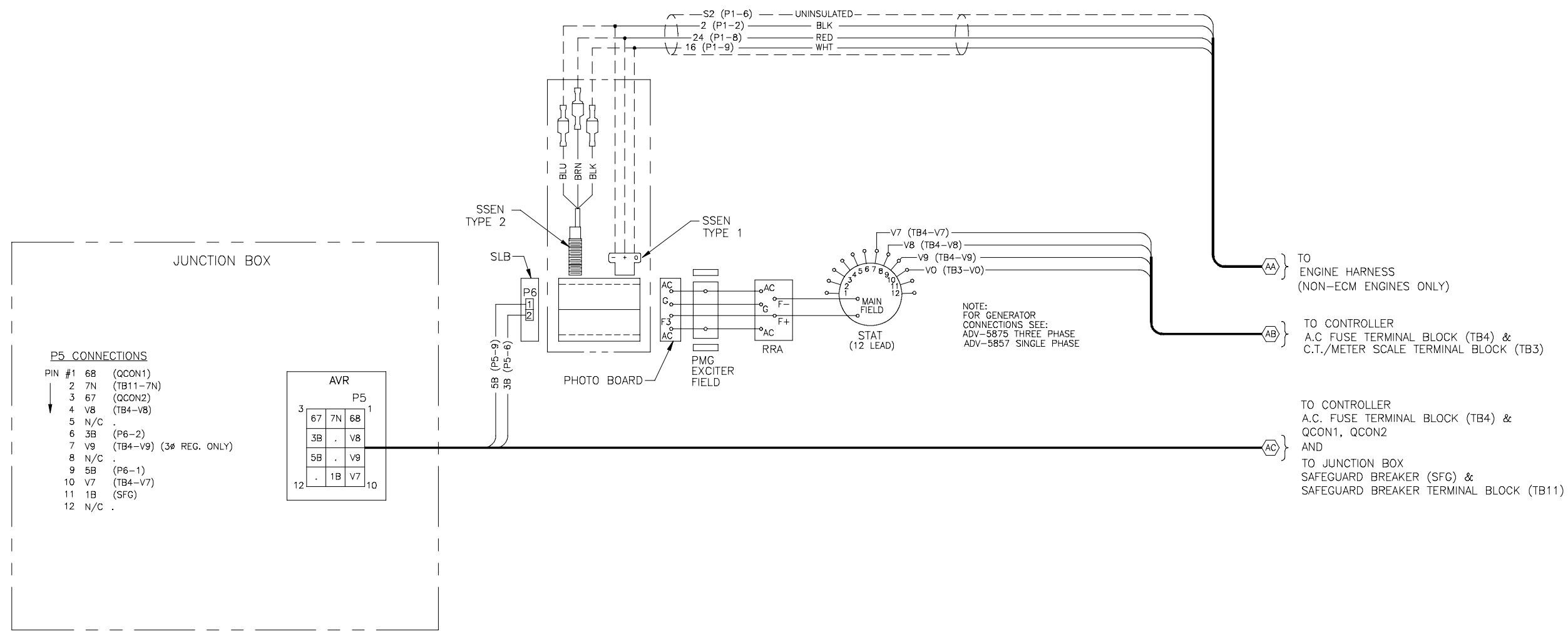

FOR SCHEMATIC SEE ADV–6955.

UNLESS OTHERWISE SPECIFIED –
1) DIMENSIONS ARE IN INCHES
2) TOLERANCES ARE:
.XXX ± .010 ANGLES ± 1/2°
.XX ± .030 SURFACE FINISH
.X ± .060 √ MAX.
FRACTIONS ±

APPROVALS		DATE
DRAWN	DFS	4–30–04
CHECKED	JS	5–8–04
APPROVED	JS	5–8–04

TITLE DIAGRAM, WIRING

SCALE / / / CAD NO. GM35941.DWG SHEET 1–1
PLOTTED DWG. NO. GM35941 D6

REV	DATE	REVISION	BY	M F
E	2-2-05	(B-8) P40-4: F1 WAS FP, P40-8: F2 WAS FN [74342]	SAM	
F	5-2-06	(A, B-6, C-4) QCON 4 ADDED (3 PLACES) [77930]	CRS	
G	6-29-06	(C-2) "NON-ECM ONLY" NOTE ADDED [78676]	CRS	
H	8-2-06	(B-5) V0 (TB3-V0) ADDED, V7 (TB4-V7) WAS 11, & V8 (TB4-V8)		
		WAS 44 [78844]	CRS	

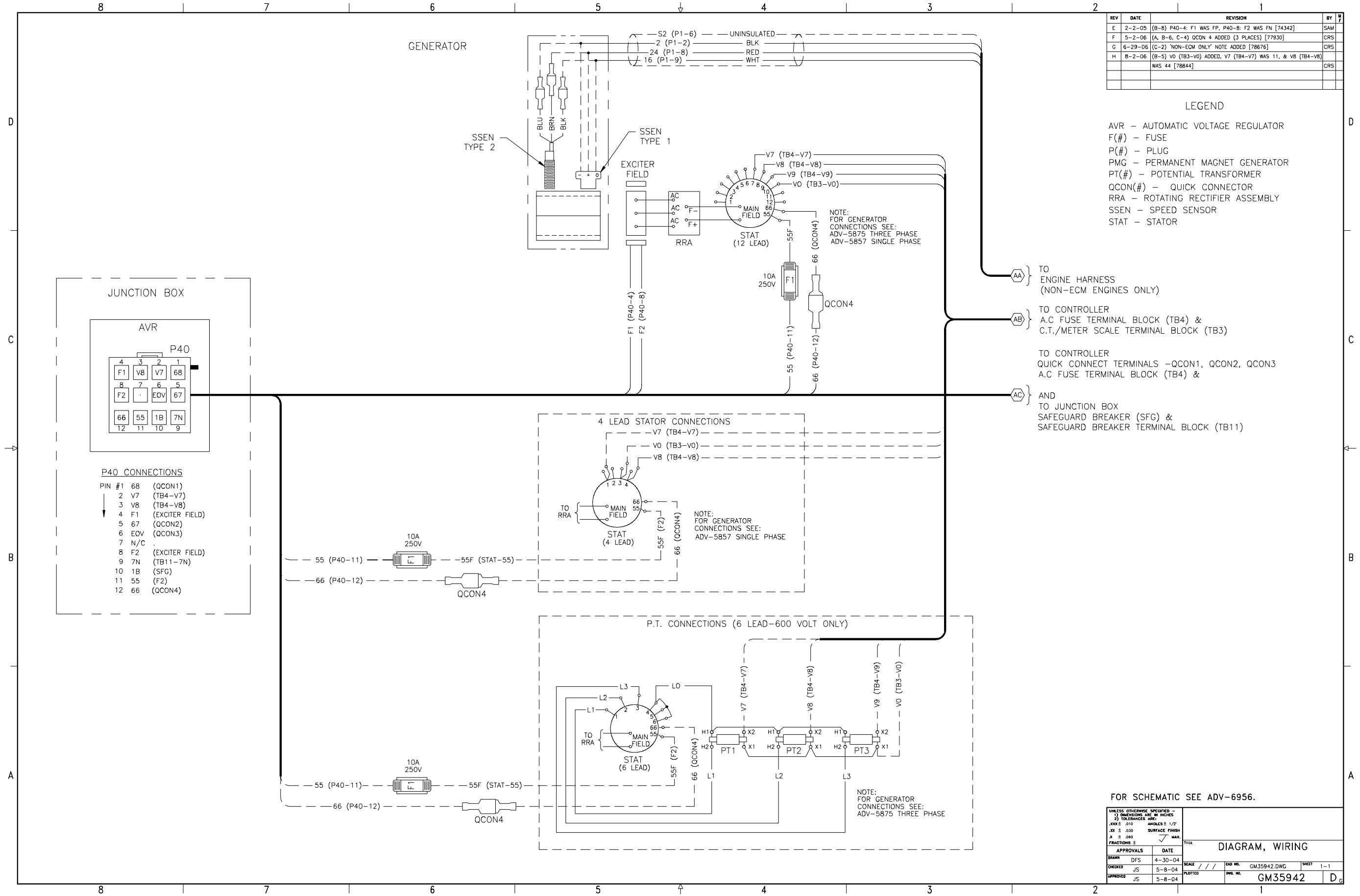

LEGEND

AVR – AUTOMATIC VOLTAGE REGULATOR
F(#) – FUSE
P(#) – PLUG
PMG – PERMANENT MAGNET GENERATOR
PT(#) – POTENTIAL TRANSFORMER
QCON(#) – QUICK CONNECTOR
RRA – ROTATING RECTIFIER ASSEMBLY
SSEN – SPEED SENSOR
STAT – STATOR

FOR SCHEMATIC SEE ADV-6956.

UNLESS OTHERWISE SPECIFIED – 1) DIMENSIONS ARE IN INCHES 2) TOLERANCES ARE: .XXX ± .010 .XX ± .030 .X ± .060 FRACTIONS ± ANGLES ± 1/2° SURFACE FINISH MAX.

APPROVALS		DATE
DRAWN	DFS	4-30-04
CHECKED	JS	5-8-04
APPROVED	JS	5-8-04

TITLE DIAGRAM, WIRING

SCALE / / / CAD NO. GM35942.DWG SHEET 1-1

PLOTTED DWG. NO. GM35942 D G

REV	DATE	REVISION	BY	M F
–	4–30–04	NEW DRAWING [71832]	DFS	
A	12–10–04	(A–1) "FOR SCHEMATIC" NOTE ADDED [73930]	DFS	

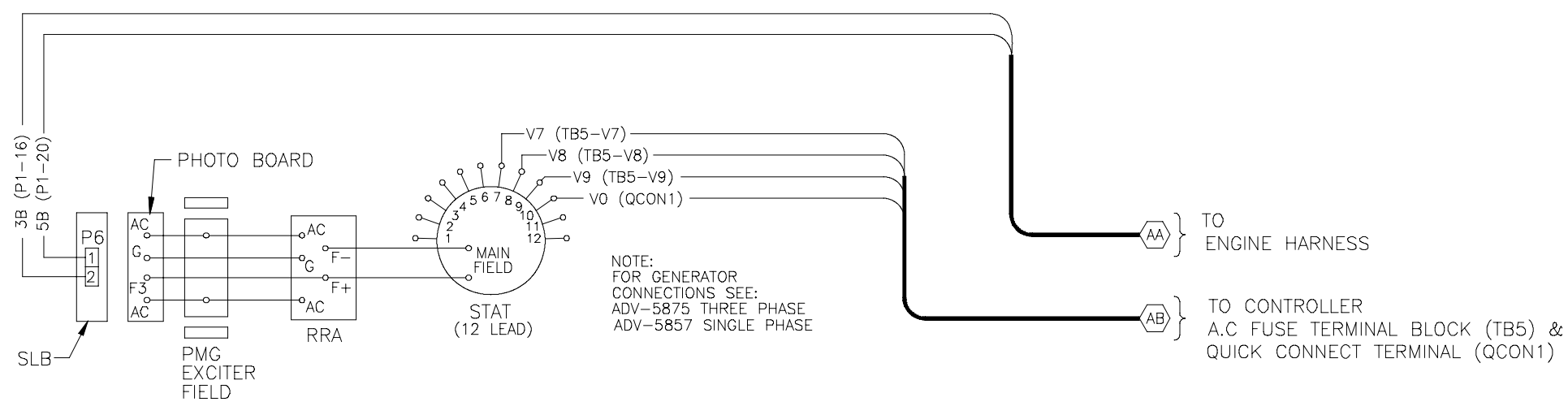

LEGEND

P(#) – PLUG
PMG – PERMANENT MAGNET GENERATOR
RRA – ROTATING RECTIFIER ASSEMBLY
SLB – STATIONARY LIGHT EMITTING DIODE BOARD
STAT – STATOR

FOR SCHEMATIC SEE ADV–6957.

UNLESS OTHERWISE SPECIFIED –
1) DIMENSIONS ARE IN INCHES
2) TOLERANCES ARE:
.XXX ± .010 ANGLES ± 1/2°
.XX ± .030 SURFACE FINISH
.X ± .060 √ MAX.
FRACTIONS ±

APPROVALS		DATE
DRAWN	DFS	4–30–04
CHECKED	JS	5–8–04
APPROVED	JS	5–8–04

TITLE DIAGRAM, WIRING

SCALE / / / | CAD NO. GM35943.DWG | SHEET 1–1
PLOTTED | DWG. NO. GM35943 | C G

REV	DATE	REVISION	BY	M F
–	4–30–04	NEW DRAWING [71832]	DFS	
A	12–10–04	(A–1,–2) "FOR SCHEMATIC" NOTE ADDED [73930]	DFS	
B	2–2–05	(C–7, C–5) F1 WAS FP, F2 WAS FN [74342]	SAM	

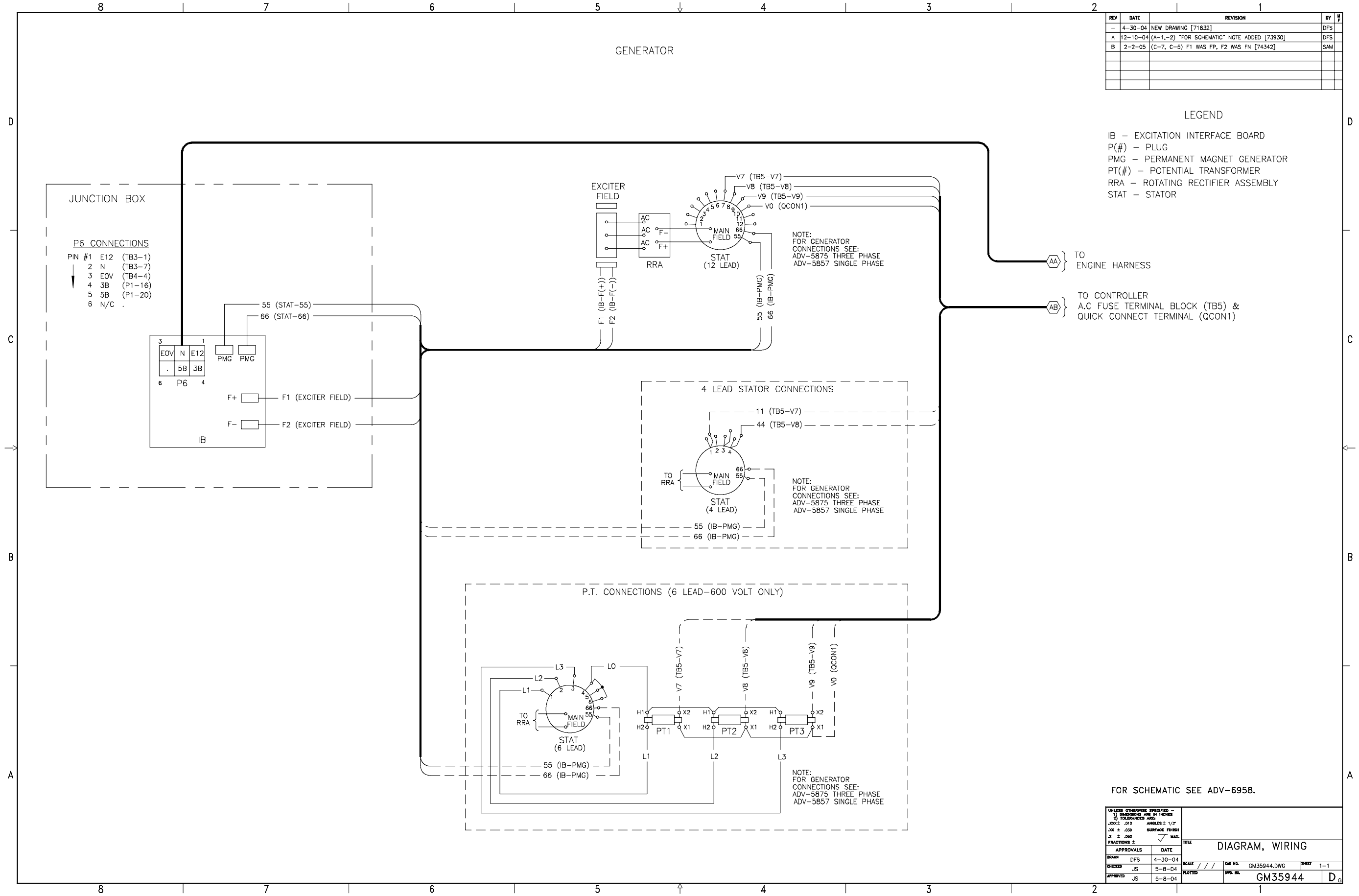

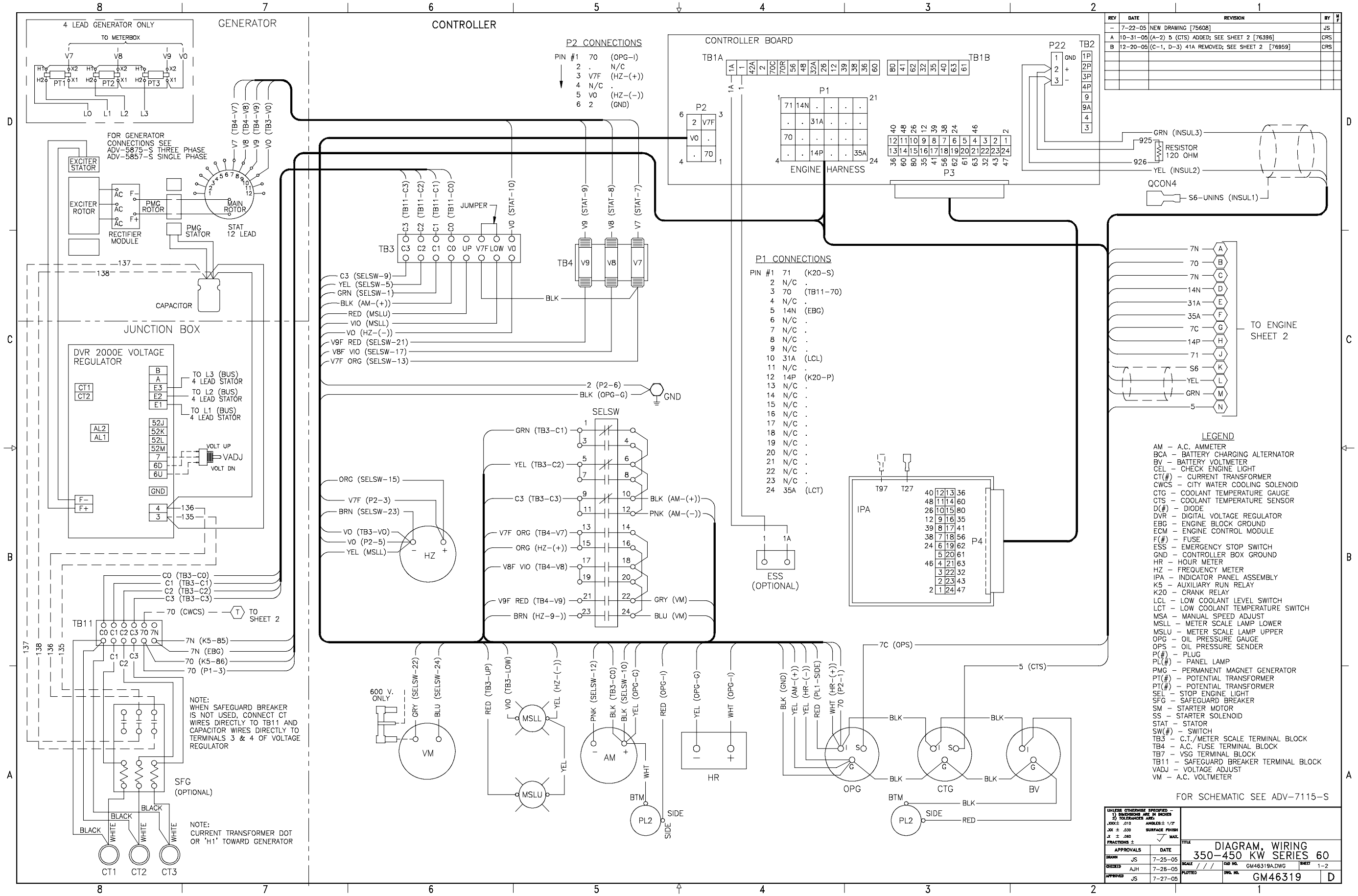

REV	DATE	REVISION	BY	M F
–	7-22-05	NEW DRAWING [75608]	JS	
A	10-31-05	(A-2) 5 (CTS) ADDED; SEE SHEET 2 [76396]	CRS	
B	12-20-06	(C-1, D-3) 41A REMOVED; SEE SHEET 2 [76959]	CRS	

APPROVALS		DATE
DRAWN	JS	7-25-05
CHECKED	AJH	7-26-05
APPROVED	JS	7-27-05

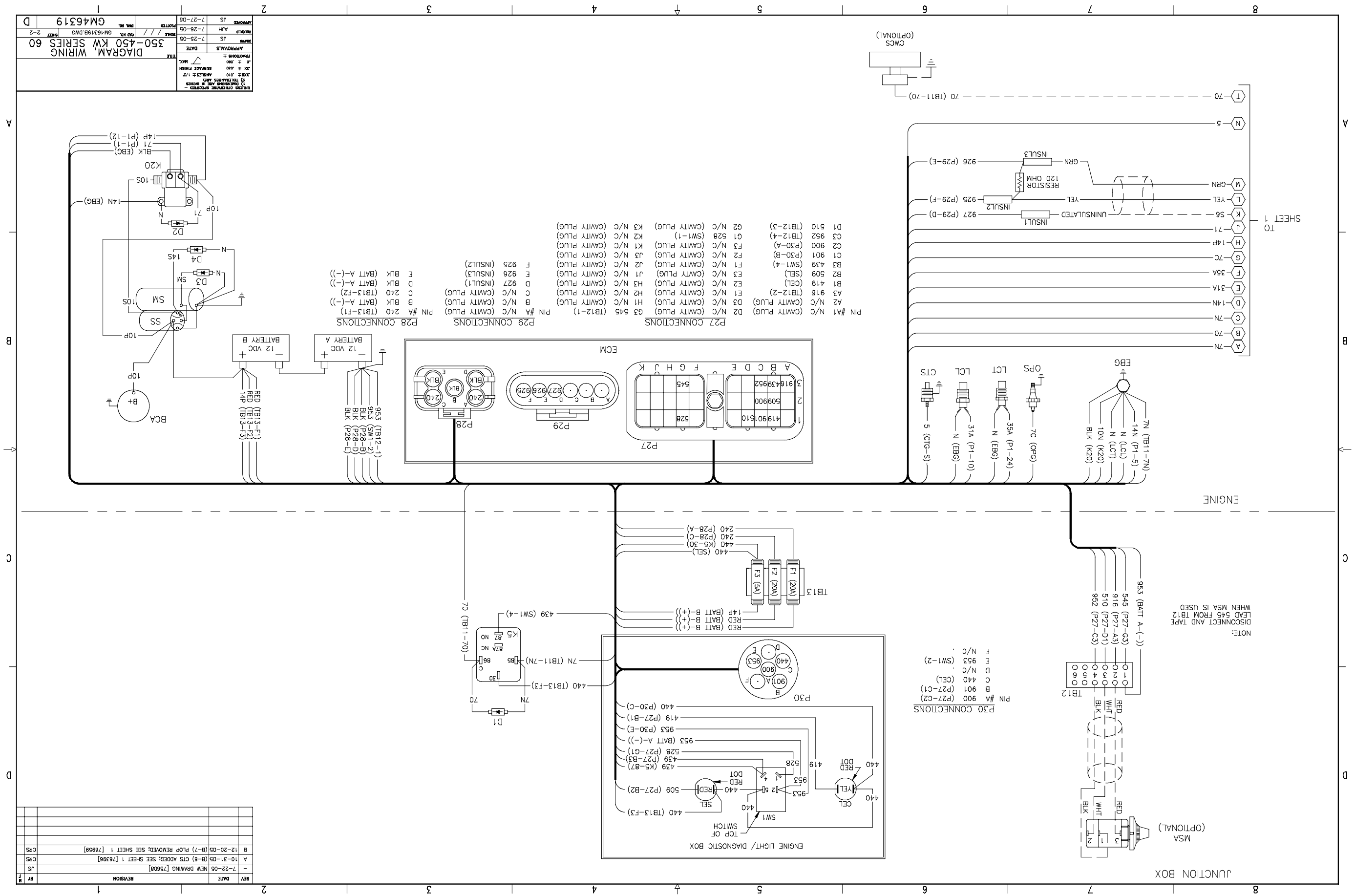

REV	DATE	REVISION	BY	N/F
–	7–22–05	NEW DRAWING [75608]	JS	
A	10–31–05	(B–6) CTS ADDED; SEE SHEET 1 [76396]	CRS	
B	12–20–05	(B–7) PLOP REMOVED; SEE SHEET 1 [76959]	CRS	

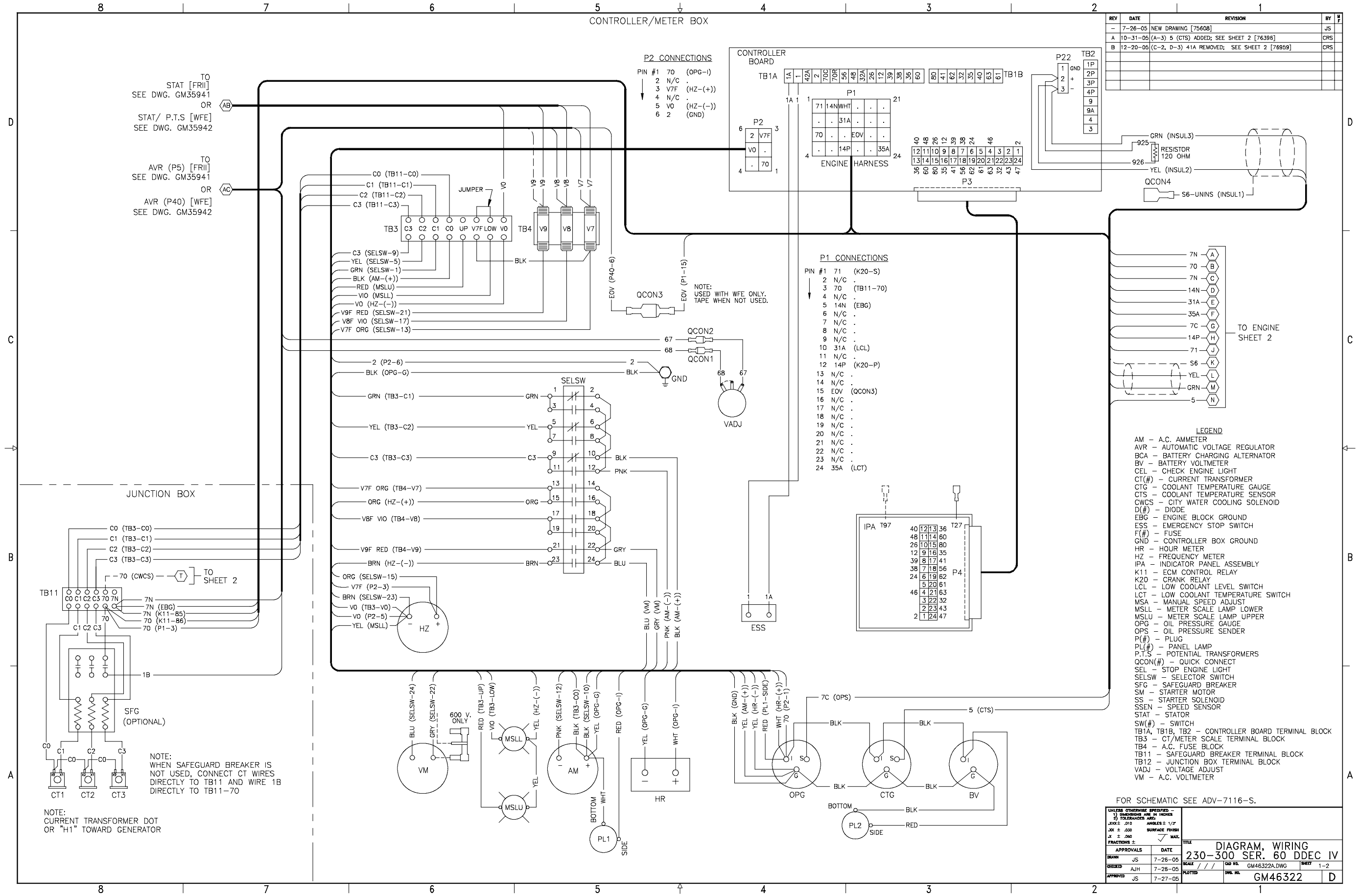

REV	DATE	REVISION	BY	M F
–	7–26–05	NEW DRAWING [75608]	JS	
A	10–31–05	(A–3) 5 (CTS) ADDED; SEE SHEET 2 [76396]	CRS	
B	12–20–06	(C–2, D–3) 41A REMOVED; SEE SHEET 2 [78959]	CRS	

LEGEND

AM – A.C. AMMETER
AVR – AUTOMATIC VOLTAGE REGULATOR
BCA – BATTERY CHARGING ALTERNATOR
BV – BATTERY VOLTMETER
CEL – CHECK ENGINE LIGHT
CT(#) – CURRENT TRANSFORMER
CTG – COOLANT TEMPERATURE GAUGE
CTS – COOLANT TEMPERATURE SENSOR
CWCS – CITY WATER COOLING SOLENOID
D(#) – DIODE
EBG – ENGINE BLOCK GROUND
ESS – EMERGENCY STOP SWITCH
F(#) – FUSE
GND – CONTROLLER BOX GROUND
HR – HOUR METER
HZ – FREQUENCY METER
IPA – INDICATOR PANEL ASSEMBLY
K11 – ECM CONTROL RELAY
K20 – CRANK RELAY
LCL – LOW COOLANT LEVEL SWITCH
LCT – LOW COOLANT TEMPERATURE SWITCH
MSA – MANUAL SPEED ADJUST
MSLL – METER SCALE LAMP LOWER
MSLU – METER SCALE LAMP UPPER
OPG – OIL PRESSURE GAUGE
OPS – OIL PRESSURE SENDER
P(#) – PLUG
PL(#) – PANEL LAMP
P.T.S – POTENTIAL TRANSFORMERS
QCON(#) – QUICK CONNECT
SEL – STOP ENGINE LIGHT
SELSW – SELECTOR SWITCH
SFG – SAFEGUARD BREAKER
SM – STARTER MOTOR
SS – STARTER SOLENOID
SSEN – SPEED SENSOR
STAT – STATOR
SW(#) – SWITCH
TB1A, TB1B, TB2 – CONTROLLER BOARD TERMINAL BLOCK
TB3 – CT/METER SCALE TERMINAL BLOCK
TB4 – A.C. FUSE BLOCK
TB11 – SAFEGUARD BREAKER TERMINAL BLOCK
TB12 – JUNCTION BOX TERMINAL BLOCK
VADJ – VOLTAGE ADJUST
VM – A.C. VOLTMETER

FOR SCHEMATIC SEE ADV–7116–S.

UNLESS OTHERWISE SPECIFIED – 1) DIMENSIONS ARE IN INCHES 2) TOLERANCES ARE: .XXX ± .010 ANGLES ± 1/2° .XX ± .030 SURFACE FINISH .X ± .060 MAX. FRACTIONS ±

APPROVALS		DATE
DRAWN	JS	7–26–05
CHECKED	AJH	7–26–05
APPROVED	JS	7–27–05

TITLE DIAGRAM, WIRING 230–300 SER. 60 DDEC IV

SCALE / / / CAD NO. GM46322A.DWG SHEET 1–2

PLOTTED DWG. NO. GM46322 D

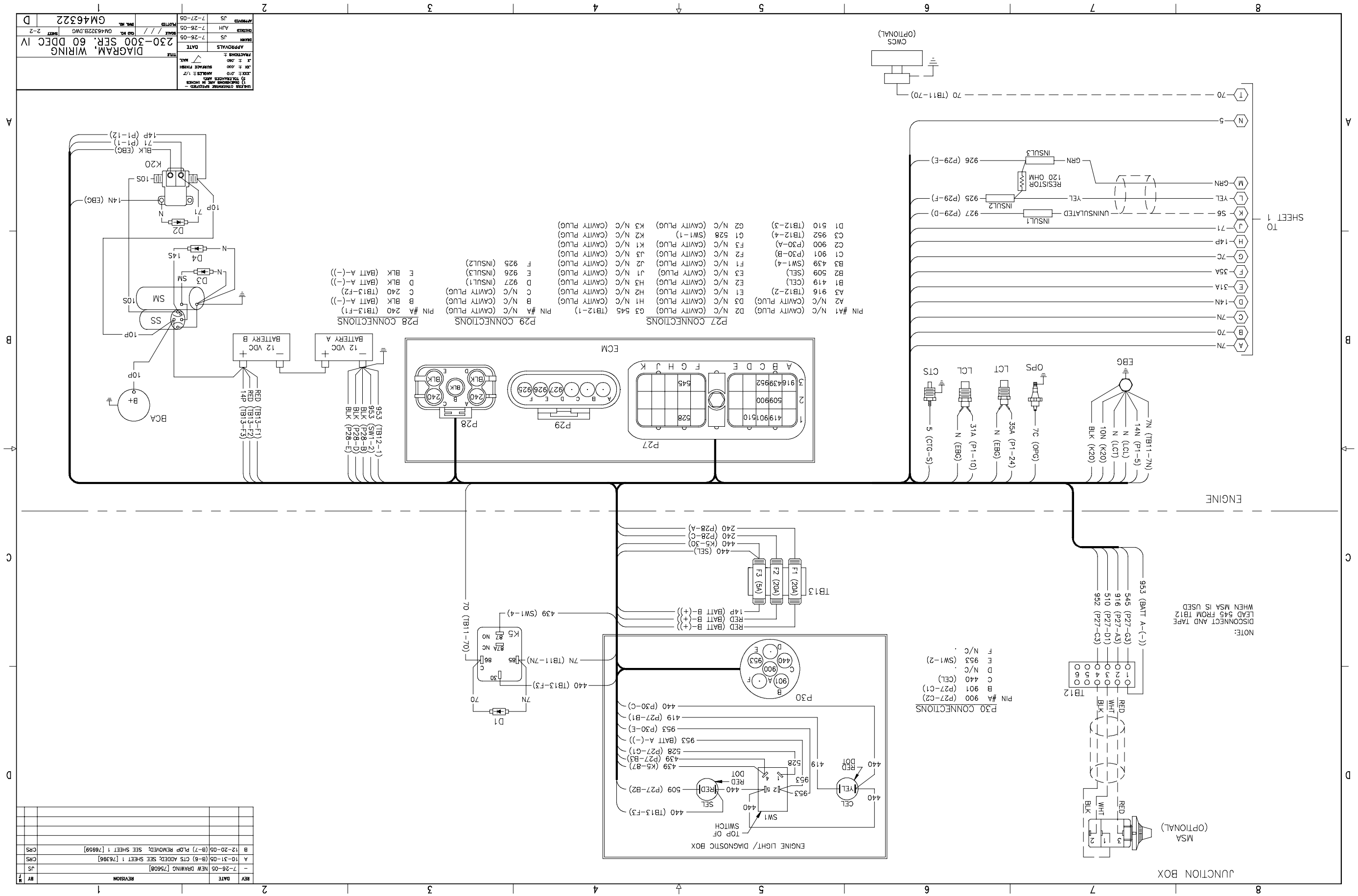
DIAGRAM, WIRING
230-300 SER. 60 DDEC IV
GM46322
D
ENGINE
JUNCTION BOX
TO SHEET 1
CWCS (OPTIONAL)
EBG
OPS
LCT
LCL
CTS
ECM
P27
P28
P29
BCA
BATTERY A
BATTERY B
SS
SM
D1
D2
D3
D4
K20
K5
TB13
TB12
MSA (OPTIONAL)
ENGINE LIGHT/ DIAGNOSTIC BOX
TOP OF SWITCH
SW1
CEL
SEL
P30
P27 CONNECTIONS
P29 CONNECTIONS
P28 CONNECTIONS
P30 CONNECTIONS
NOTE:
DISCONNECT AND TAPE LEAD 545 FROM TB12 WHEN MSA IS USED

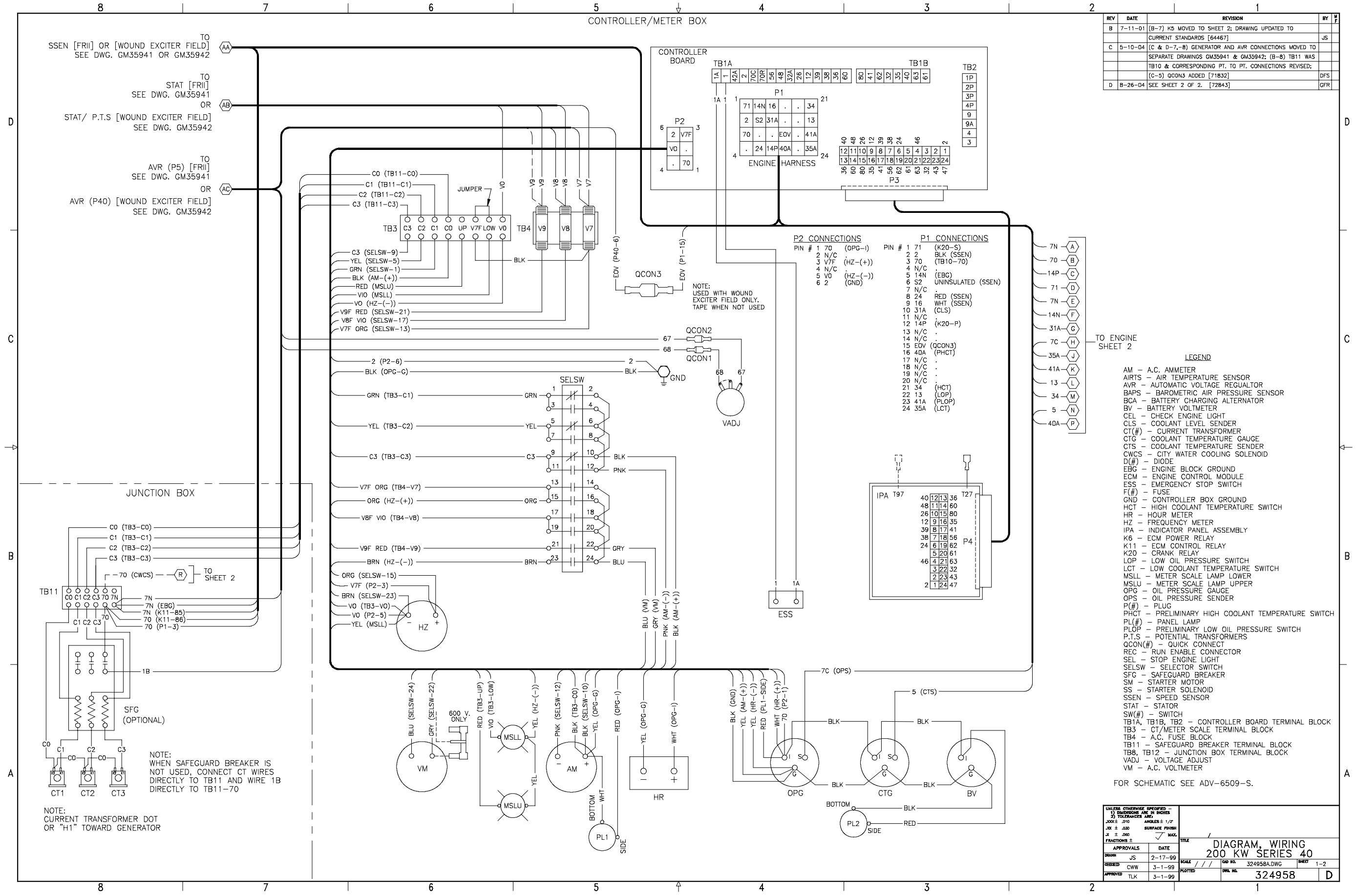

REV	DATE	REVISION	BY	M F
B	7-11-01	(B-7) K5 MOVED TO SHEET 2; DRAWING UPDATED TO		
		CURRENT STANDARDS [64467]	JS	
C	5-10-04	(C & D-7,-8) GENERATOR AND AVR CONNECTIONS MOVED TO		
		SEPARATE DRAWINGS GM35941 & GM35942; (B-8) TB11 WAS		
		TB10 & CORRESPONDING PT. TO PT. CONNECTIONS REVISED;		
		(C-5) QCON3 ADDED [71832]	DFS	
D	8-26-04	SEE SHEET 2 OF 2. [72843]	GFR	

P2 CONNECTIONS

PIN #		
1	70	(OPG-I)
2	N/C	.
3	V7F	(HZ-(+))
4	N/C	.
5	V0	(HZ-(-))
6	2	(GND)

P1 CONNECTIONS

PIN #		
1	71	(K20-S)
2	2	BLK (SSEN)
3	70	(TB10-70)
4	N/C	.
5	14N	(EBG)
6	S2	UNINSULATED (SSEN)
7	N/C	.
8	24	RED (SSEN)
9	16	WHT (SSEN)
10	31A	(CLS)
11	N/C	.
12	14P	(K20-P)
13	N/C	.
14	N/C	.
15	EOV	(QCON3)
16	40A	(PHCT)
17	N/C	.
18	N/C	.
19	N/C	.
20	N/C	.
21	34	(HCT)
22	13	(LOP)
23	41A	(PLOP)
24	35A	(LCT)

LEGEND

AM – A.C. AMMETER
AIRTS – AIR TEMPERATURE SENSOR
AVR – AUTOMATIC VOLTAGE REGUALTOR
BAPS – BAROMETRIC AIR PRESSURE SENSOR
BCA – BATTERY CHARGING ALTERNATOR
BV – BATTERY VOLTMETER
CEL – CHECK ENGINE LIGHT
CLS – COOLANT LEVEL SENDER
CT(#) – CURRENT TRANSFORMER
CTG – COOLANT TEMPERATURE GAUGE
CTS – COOLANT TEMPERATURE SENDER
CWCS – CITY WATER COOLING SOLENOID
D(#) – DIODE
EBG – ENGINE BLOCK GROUND
ECM – ENGINE CONTROL MODULE
ESS – EMERGENCY STOP SWITCH
F(#) – FUSE
GND – CONTROLLER BOX GROUND
HCT – HIGH COOLANT TEMPERATURE SWITCH
HR – HOUR METER
HZ – FREQUENCY METER
IPA – INDICATOR PANEL ASSEMBLY
K6 – ECM POWER RELAY
K11 – ECM CONTROL RELAY
K20 – CRANK RELAY
LOP – LOW OIL PRESSURE SWITCH
LCT – LOW COOLANT TEMPERATURE SWITCH
MSLL – METER SCALE LAMP LOWER
MSLU – METER SCALE LAMP UPPER
OPG – OIL PRESSURE GAUGE
OPS – OIL PRESSURE SENDER
P(#) – PLUG
PHCT – PRELIMINARY HIGH COOLANT TEMPERATURE SWITCH
PL(#) – PANEL LAMP
PLOP – PRELIMINARY LOW OIL PRESSURE SWITCH
P.T.S – POTENTIAL TRANSFORMERS
QCON(#) – QUICK CONNECT
REC – RUN ENABLE CONNECTOR
SEL – STOP ENGINE LIGHT
SELSW – SELECTOR SWITCH
SFG – SAFEGUARD BREAKER
SM – STARTER MOTOR
SS – STARTER SOLENOID
SSEN – SPEED SENSOR
STAT – STATOR
SW(#) – SWITCH
TB1A, TB1B, TB2 – CONTROLLER BOARD TERMINAL BLOCK
TB3 – CT/METER SCALE TERMINAL BLOCK
TB4 – A.C. FUSE BLOCK
TB11 – SAFEGUARD BREAKER TERMINAL BLOCK
TB8, TB12 – JUNCTION BOX TERMINAL BLOCK
VADJ – VOLTAGE ADJUST
VM – A.C. VOLTMETER

FOR SCHEMATIC SEE ADV-6509-S.

UNLESS OTHERWISE SPECIFIED – 1) DIMENSIONS ARE IN INCHES 2) TOLERANCES ARE: .XXX ± .010 ANGLES ± 1/2° .XX ± .030 SURFACE FINISH .X ± .060 MAX. FRACTIONS ±

APPROVALS		DATE
DRAWN	JS	2-17-99
CHECKED	CWW	3-1-99
APPROVED	TLK	3-1-99

TITLE DIAGRAM, WIRING 200 KW SERIES 40

SCALE / / / CAD NO. 324958A.DWG SHEET 1-2

PLOTTED DWG. NO. 324958 D

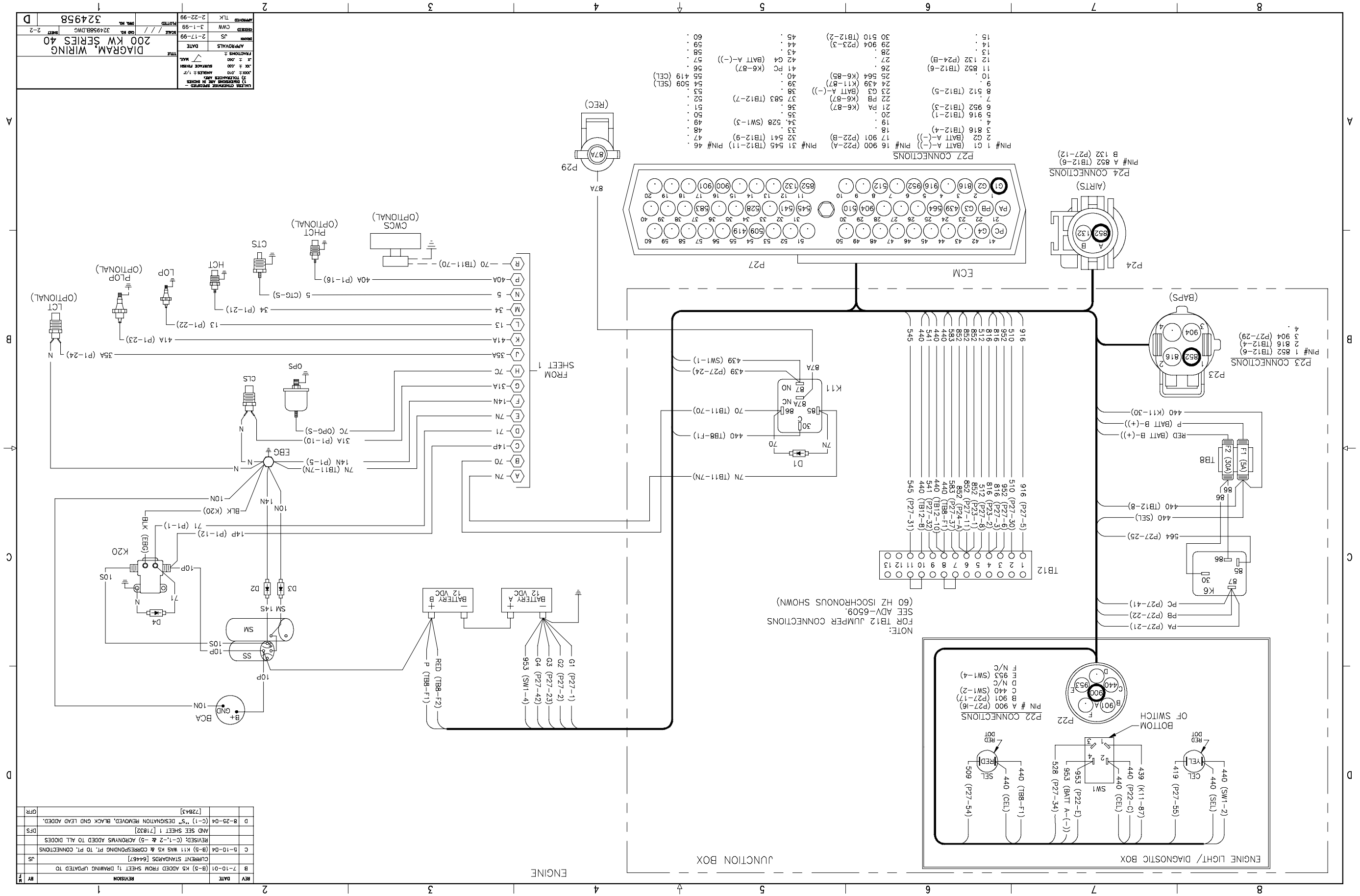

REV	DATE	REVISION	BY	M F
B	7-10-01	(B-5) K5 ADDED FROM SHEET 1; DRAWING UPDATED TO CURRENT STANDARDS [64467]	JS	
C	5-10-04	(B-5) K11 WAS K5 & CORRESPONDING PL TO PL. CONNECTIONS REVISED; (C-1,-2 & -5) ACRONYMS ADDED TO ALL DIODES AND SEE SHEET 1 [71832]	DFS	
D	8-25-04	(C-1) "S" DESIGNATION REMOVED. BLACK GND LEAD ADDED. [72843]	GFR	

UNLESS OTHERWISE SPECIFIED –
1) DIMENSIONS ARE IN INCHES
2) TOLERANCES ARE:
.XX ± .020 SURFACE FINISH
.X ± .060 ANGLES ± 1/2°
FRACTIONS ± 1/64
DRAWN JS 2-17-99
APPROVALS DATE
DESIGN CWW 3-1-99
APPROVED TLK 2-22-99
TITLE DIAGRAM, WIRING 200 KW SERIES 40
SCALE / / / DWG NO. 324958B.DWG SHEET 2-2
D 324958

REV	DATE	REVISION	BY	M F
D	3-31-97	(B-4) INDICATOR PANEL ASSEMBLY ADDED; (B-4, C-2, D-3)		
		HIGH BATTERY VOLTAGE "27" WIRING ADDED; (A-8) LEGEND		
		UPDATED [497B1]	DFS	
E	11-19-97	(A-2) "MICROPROCESSOR-PLUS" WAS "DEC 3+" ON		
		SPECTRUM TITLEBLOCK [52692]	KAR	
F	4-21-99	(A-2) INSTALLATION NOTE ADDED [58396]	LDA	
G	4-20-04	SEE SHEET 2 [72023]	SAM	

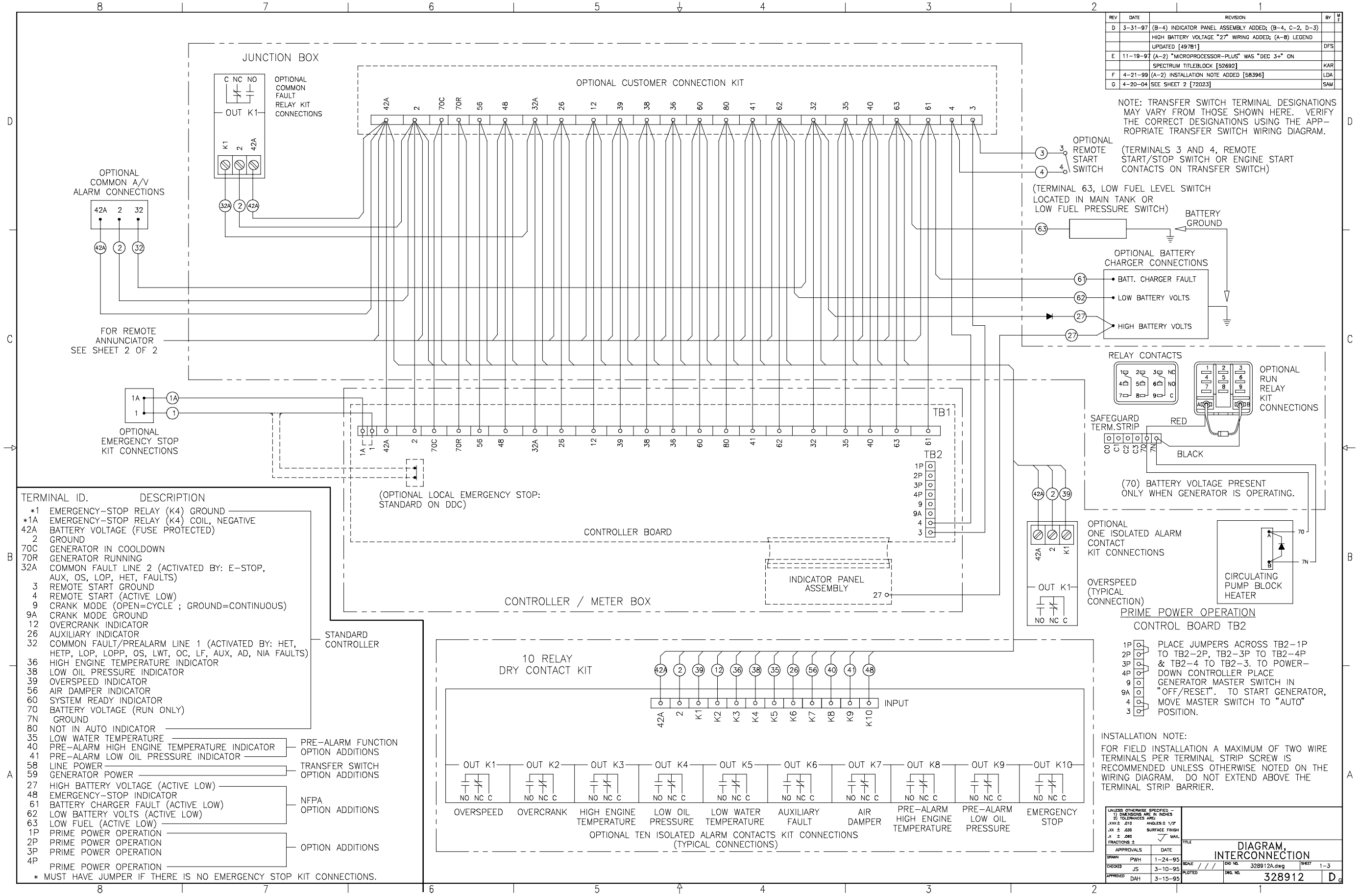

NOTE: TRANSFER SWITCH TERMINAL DESIGNATIONS MAY VARY FROM THOSE SHOWN HERE. VERIFY THE CORRECT DESIGNATIONS USING THE APPROPRIATE TRANSFER SWITCH WIRING DIAGRAM.

INSTALLATION NOTE:

FOR FIELD INSTALLATION A MAXIMUM OF TWO WIRE TERMINALS PER TERMINAL STRIP SCREW IS RECOMMENDED UNLESS OTHERWISE NOTED ON THE WIRING DIAGRAM. DO NOT EXTEND ABOVE THE TERMINAL STRIP BARRIER.

TERMINAL ID.	DESCRIPTION	
*1	EMERGENCY-STOP RELAY (K4) GROUND	STANDARD CONTROLLER
*1A	EMERGENCY-STOP RELAY (K4) COIL, NEGATIVE	
42A	BATTERY VOLTAGE (FUSE PROTECTED)	
2	GROUND	
70C	GENERATOR IN COOLDOWN	
70R	GENERATOR RUNNING	
32A	COMMON FAULT LINE 2 (ACTIVATED BY: E-STOP, AUX, OS, LOP, HET, FAULTS)	
3	REMOTE START GROUND	
4	REMOTE START (ACTIVE LOW)	
9	CRANK MODE (OPEN=CYCLE ; GROUND=CONTINUOUS)	
9A	CRANK MODE GROUND	
12	OVERCRANK INDICATOR	
26	AUXILIARY INDICATOR	
32	COMMON FAULT/PREALARM LINE 1 (ACTIVATED BY: HET, HETP, LOP, LOPP, OS, LWT, OC, LF, AUX, AD, NIA FAULTS)	
36	HIGH ENGINE TEMPERATURE INDICATOR	
38	LOW OIL PRESSURE INDICATOR	
39	OVERSPEED INDICATOR	
56	AIR DAMPER INDICATOR	
60	SYSTEM READY INDICATOR	
70	BATTERY VOLTAGE (RUN ONLY)	
7N	GROUND	
80	NOT IN AUTO INDICATOR	
35	LOW WATER TEMPERATURE	PRE-ALARM FUNCTION OPTION ADDITIONS
40	PRE-ALARM HIGH ENGINE TEMPERATURE INDICATOR	
41	PRE-ALARM LOW OIL PRESSURE INDICATOR	
58	LINE POWER	TRANSFER SWITCH OPTION ADDITIONS
59	GENERATOR POWER	
27	HIGH BATTERY VOLTAGE (ACTIVE LOW)	NFPA OPTION ADDITIONS
48	EMERGENCY-STOP INDICATOR	
61	BATTERY CHARGER FAULT (ACTIVE LOW)	
62	LOW BATTERY VOLTS (ACTIVE LOW)	
63	LOW FUEL (ACTIVE LOW)	
1P	PRIME POWER OPERATION	OPTION ADDITIONS
2P	PRIME POWER OPERATION	
3P	PRIME POWER OPERATION	
4P	PRIME POWER OPERATION	

* MUST HAVE JUMPER IF THERE IS NO EMERGENCY STOP KIT CONNECTIONS.

REV	DATE	REVISION	BY	V F
D	9-3-98	(A-2) 20-2000 KW WAS 20-1600 KW; (D-6) CUSTOMER		
		INTERCONNECTION KIT, OR INNER PANEL TERMINAL BLOCK.		
		ADDED [55875]	LDS	
F	4-21-99	(A-2) INSTALLATION NOTE ADDED [58396]	LDA	
G	4-20-04	(B-4) LEAD CONNECTION NOTE UPDATED [72023]	SAM	

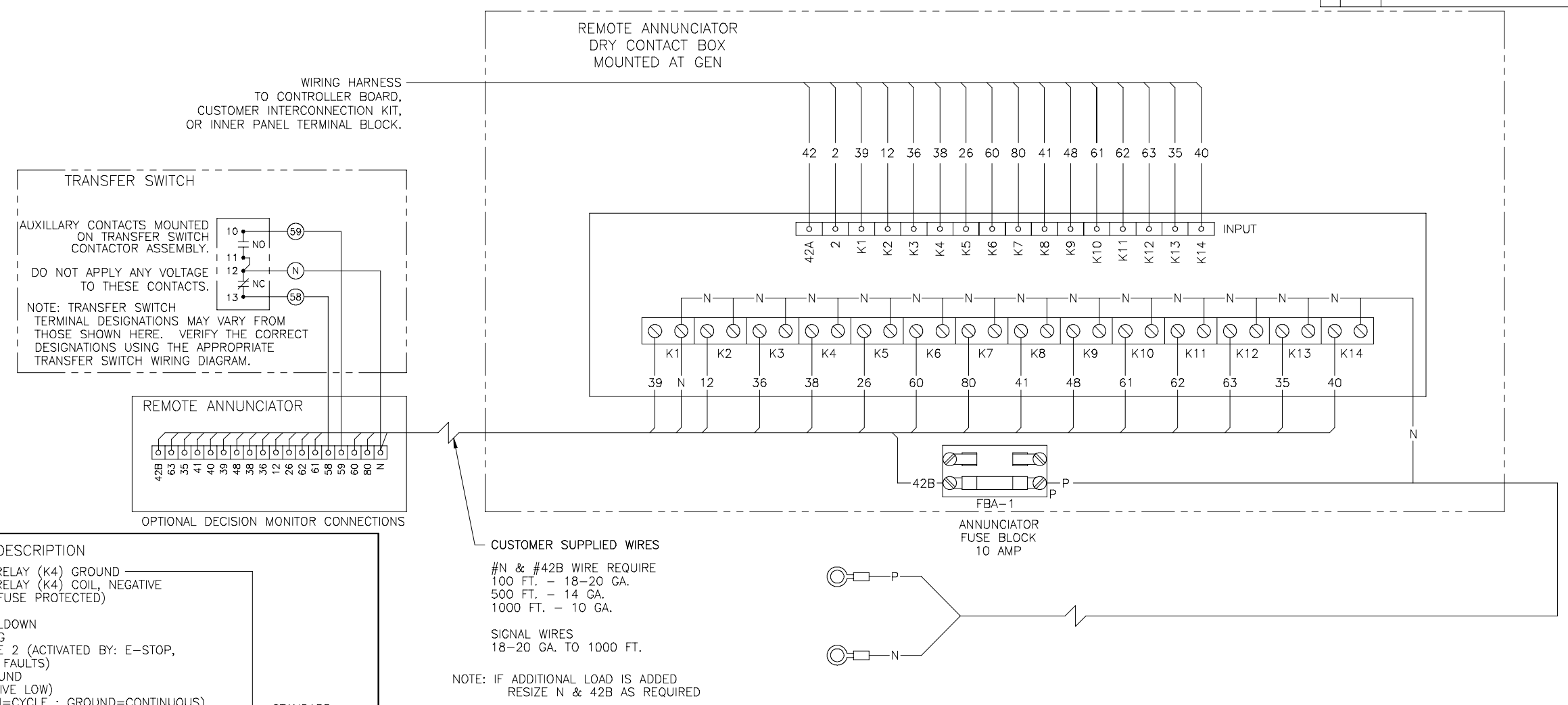

TERMINAL ID.	DESCRIPTION	
*1	EMERGENCY-STOP RELAY (K4) GROUND	STANDARD CONTROLLER
*1A	EMERGENCY-STOP RELAY (K4) COIL, NEGATIVE	
42A	BATTERY VOLTAGE (FUSE PROTECTED)	
2	GROUND	
70C	GENERATOR IN COOLDOWN	
70R	GENERATOR RUNNING	
32A	COMMON FAULT LINE 2 (ACTIVATED BY: E-STOP, AUX, OS, LOP, HET FAULTS)	
3	REMOTE START GROUND	
4	REMOTE START (ACTIVE LOW)	
9	CRANK MODE (OPEN=CYCLE ; GROUND=CONTINUOUS)	
9A	CRANK MODE GROUND	
12	OVERCRANK INDICATOR	
26	AUXILIARY INDICATOR	
32	COMMON FAULT/PREALARM LINE 1 (ACTIVATED BY: HET, HETP, LOP, LOPP, OS, LWT, OC, LF, AUX, AD, NIA FAULTS)	
36	HIGH ENGINE TEMPERATURE INDICATOR	
38	LOW OIL PRESSURE INDICATOR	
39	OVERSPEED INDICATOR	
56	AIR DAMPER INDICATOR	
60	SYSTEM READY INDICATOR	
70	BATTERY VOLTAGE (RUN ONLY)	
7N	GROUND	
80	NOT IN AUTO INDICATOR	
35	LOW WATER TEMPERATURE	PRE-ALARM FUNCTION OPTION ADDITIONS
40	PRE-ALARM HIGH ENGINE TEMPERATURE INDICATOR	
41	PRE-ALARM LOW OIL PRESSURE INDICATOR	
58	LINE POWER	TRANSFER SWITCH OPTION ADDITIONS
59	GENERATOR POWER	
48	EMERGENCY-STOP INDICATOR	NFPA OPTION ADDITIONS
61	BATTERY CHARGER FAULT (ACTIVE LOW)	
62	LOW BATTERY VOLTS (ACTIVE LOW)	
63	LOW FUEL (ACTIVE LOW)	
1P	PRIME POWER OPERATION	OPTION ADDITIONS
2P	PRIME POWER OPERATION	
3P	PRIME POWER OPERATION	
4P	PRIME POWER OPERATION	

* MUST HAVE JUMPER IF THERE IS NO EMERGENCY STOP KIT CONNECTIONS.

NOTE:
LEAD "N" CONNECTION: CONNECT LEAD "N" TO ENGINE BLOCK GROUND.
LEAD "P" CONNECTION:
PREFERRED– CONNECT LEAD "P" TO TERMINAL WITH "P" WIRES ON CRANK RELAY.
ALTERNATE – CONNECT LEAD "P" TO BATTERY POSITIVE (+) TERMINAL ON STARTER SOLENOID.
USE WIRE HARNESS PROVIDED, CUT AND TERMINATE AS REQUIRED.

INSTALLATION NOTE:
FOR FIELD INSTALLATION A MAXIMUM OF TWO WIRE TERMINALS PER TERMINAL STRIP SCREW IS RECOMMENDED UNLESS OTHERWISE NOTED ON THE WIRING DIAGRAM. DO NOT EXTEND ABOVE THE TERMINAL STRIP BARRIER.

UNLESS OTHERWISE SPECIFIED –
1) DIMENSIONS ARE IN INCHES
2) TOLERANCES ARE:
.XXX ± .010 ANGLES ± 1/2°
.XX ± .030 SURFACE FINISH
.X ± .060 MAX.
FRACTIONS ±

APPROVALS		DATE
DRAWN	PWH	1-24-95
CHECKED	JS	3-10-95
APPROVED	DAH	3-15-95

TITLE DIAGRAM, INTERCONNECTION
SCALE / / /
CAD NO. 328912B.dwg
SHEET 2-3
PLOTTED
DRG. NO. 328912
D

REV	DATE	REVISION	BY	M F
A	10-9-96	SHEET 3 OF 3 ADDED [45684]	KAR	
B	11-19-97	(A-2) "MICROPROCESSOR-PLUS" WAS "DEC 3+" ON		
		SPECTRUM TITLEBLOCK [52692]	KAR	
F	4-21-99	(A-2) INSTALLATION NOTE ADDED [58396]	LDA	
G	4-20-04	SEE SHEET 2 [72023]	SAM	

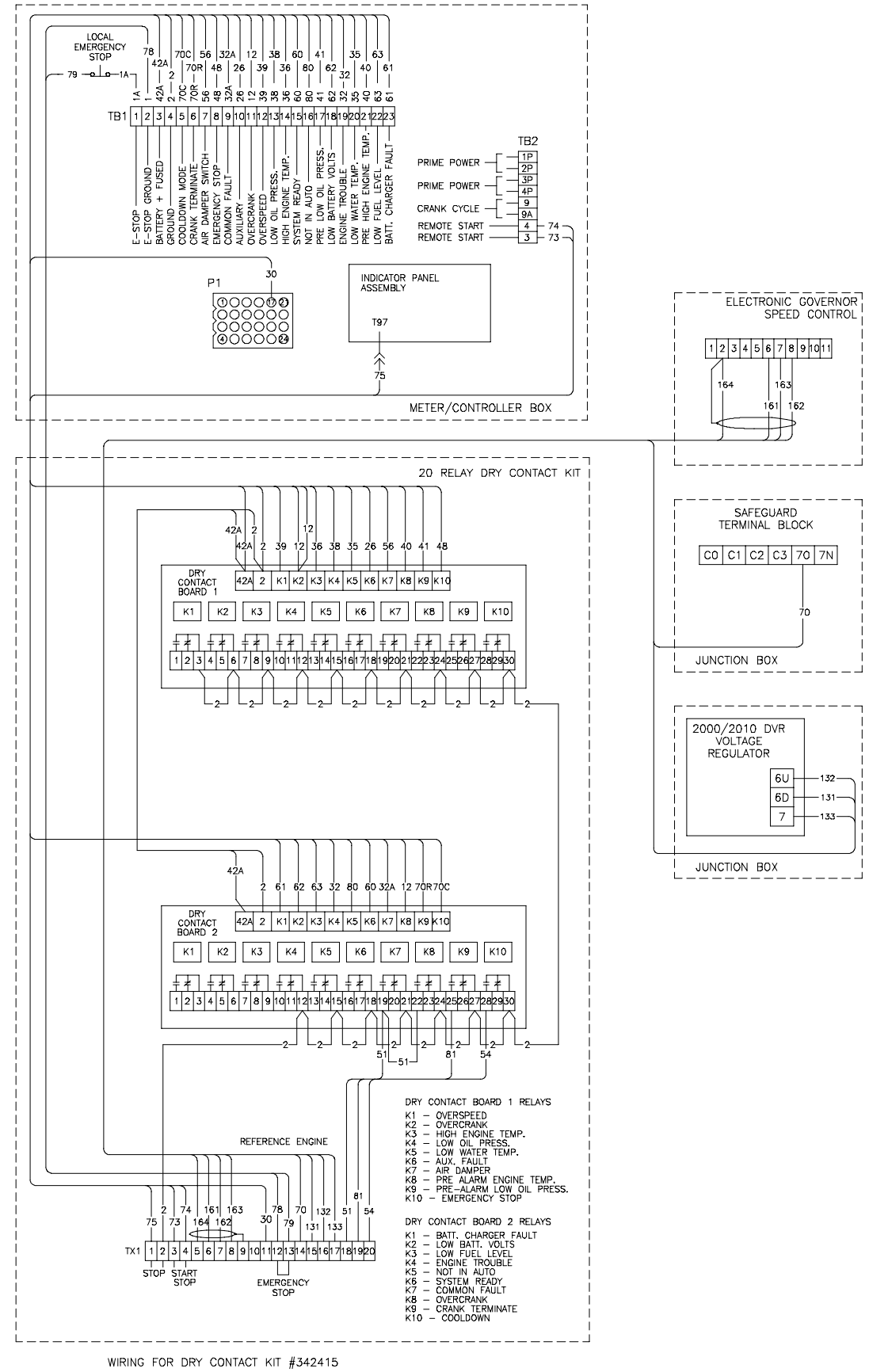

WIRING FOR DRY CONTACT KIT #342415

INSTALLATION NOTE:

FOR FIELD INSTALLATION A MAXIMUM OF TWO WIRE TERMINALS PER TERMINAL STRIP SCREW IS RECOMMENDED UNLESS OTHERWISE NOTED ON THE WIRING DIAGRAM. DO NOT EXTEND ABOVE THE TERMINAL STRIP BARRIER.

UNLESS OTHERWISE SPECIFIED – 1) DIMENSIONS ARE IN INCHES 2) TOLERANCES ARE:
.XXX ± .010 ANGLES ± 1/2°
.XX ± .030 SURFACE FINISH
.X ± .060 √ MAX.
FRACTIONS ±

APPROVALS		DATE
DRAWN	KAR	10-9-96
CHECKED	JS	10-10-96
APPROVED	DAH	10-10-96

TITLE DIAGRAM, INTERCONNECTION

SCALE / / / CAD NO. 328912C.DWG SHEET 3-3

PLOTTED DWG. NO. 328912 D G

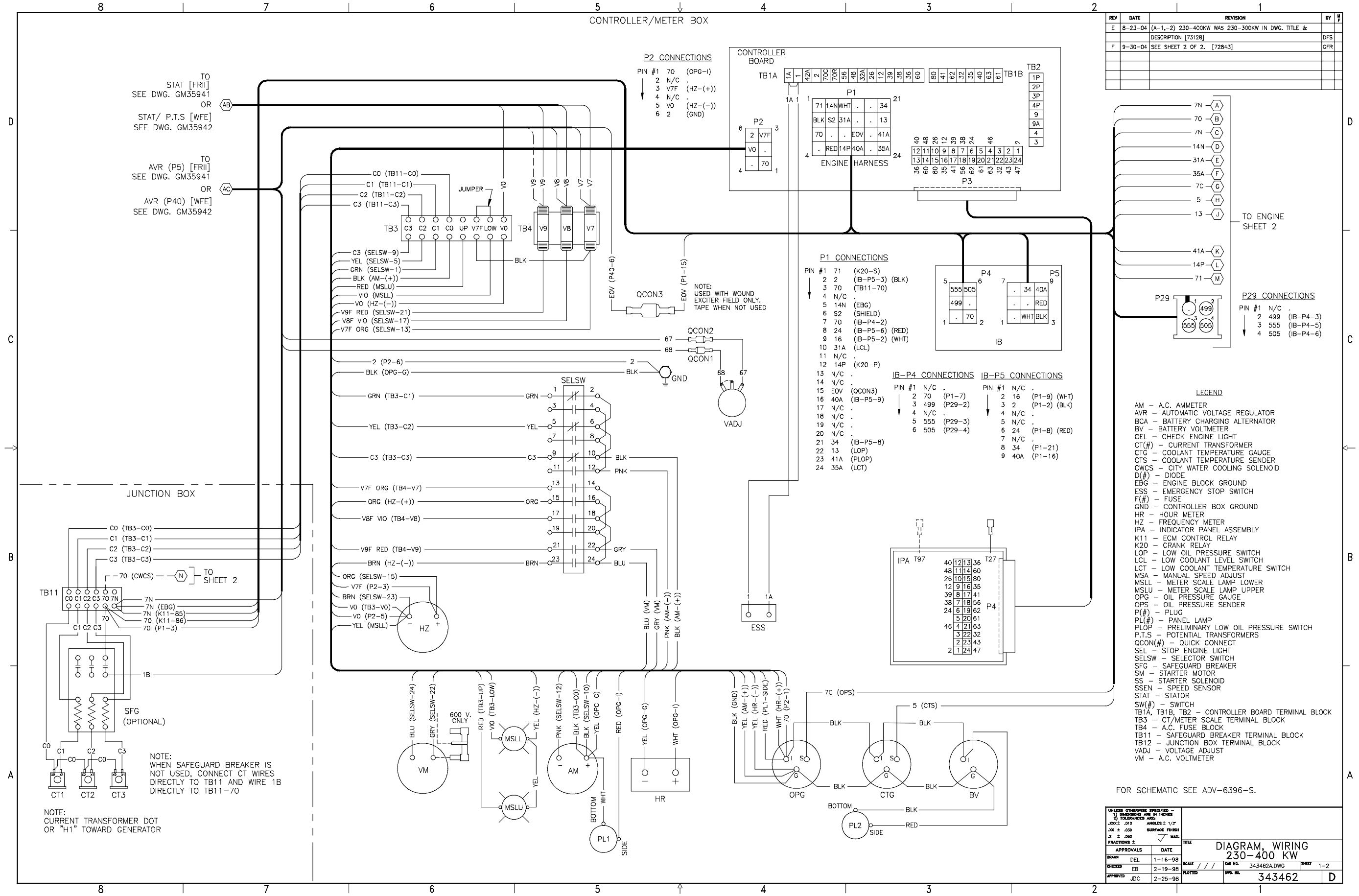

REV	DATE	REVISION	BY	M F
E	8-23-04	(A-1,-2) 230-400KW WAS 230-300KW IN DWG. TITLE &		
		DESCRIPTION [73128]	DFS	
F	9-30-04	SEE SHEET 2 OF 2. [72843]	GFR	

REV	DATE	REVISION	BY	M F
D	5-10-04	(C-3) K11 WAS K5 & CORRESPONDING PT. TO PT. CONNECTIONS		
		REVISED; (C-2) TB12 WAS TB7 & CORRESPONDING PT. TO PT.		
		CONNECTIONS REVISED; (A-1,-2) K20 WAS K1 & CORRESPONDING		
		PT. TO PT. CONNECTIONS REVISED AND SEE SHEET 1 [71832]	DFS	
E	8-23-04	(A-1,-2) 230-400KW WAS 230-300KW IN DWG. TITLE &		
		DESCRIPTION [73128]	DFS	
F	9-30-04	(A-1)"S" DESIGNATION REMOVED, BLACK GND LEAD ADDED.[72843]	GFR	

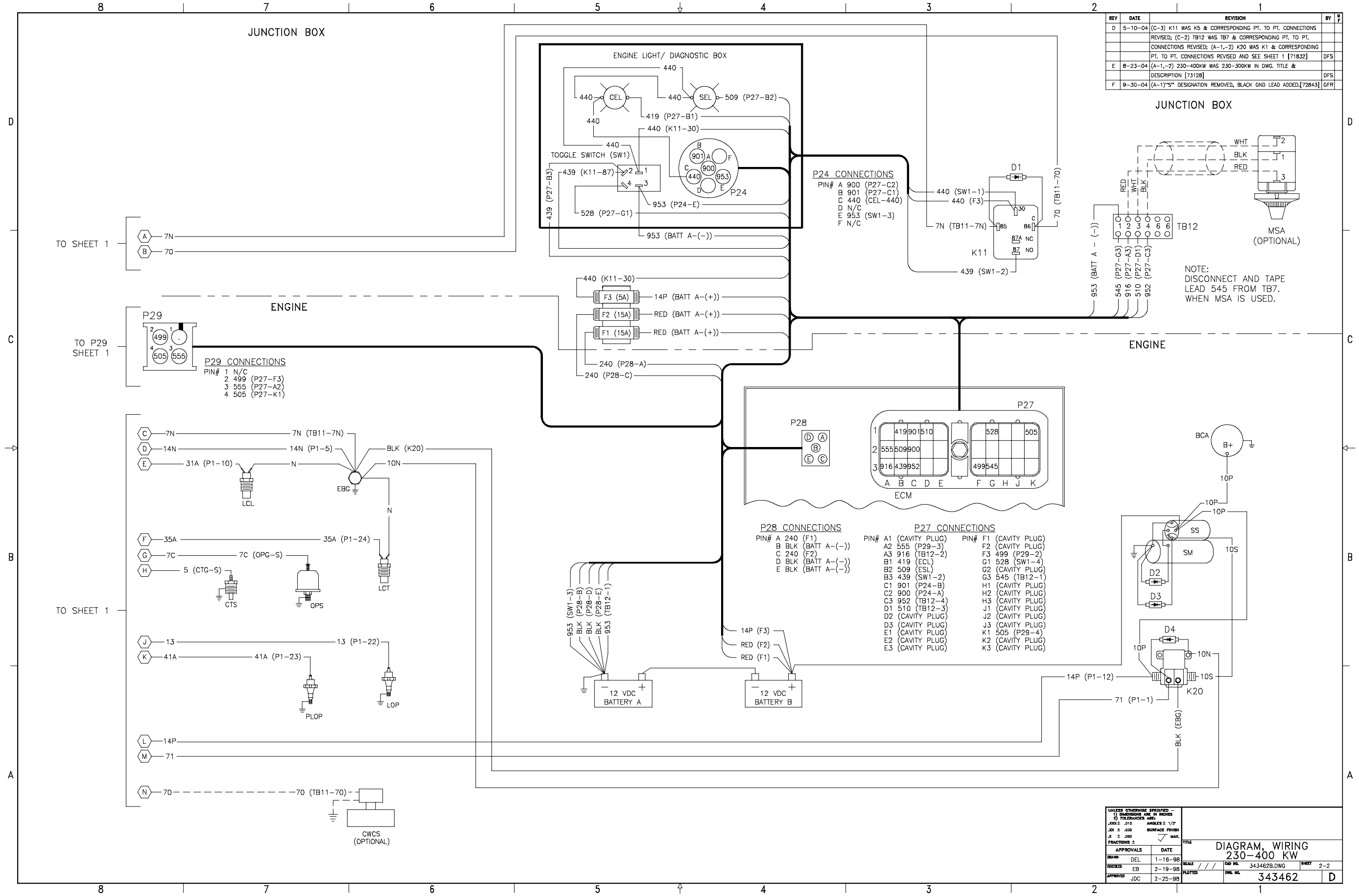

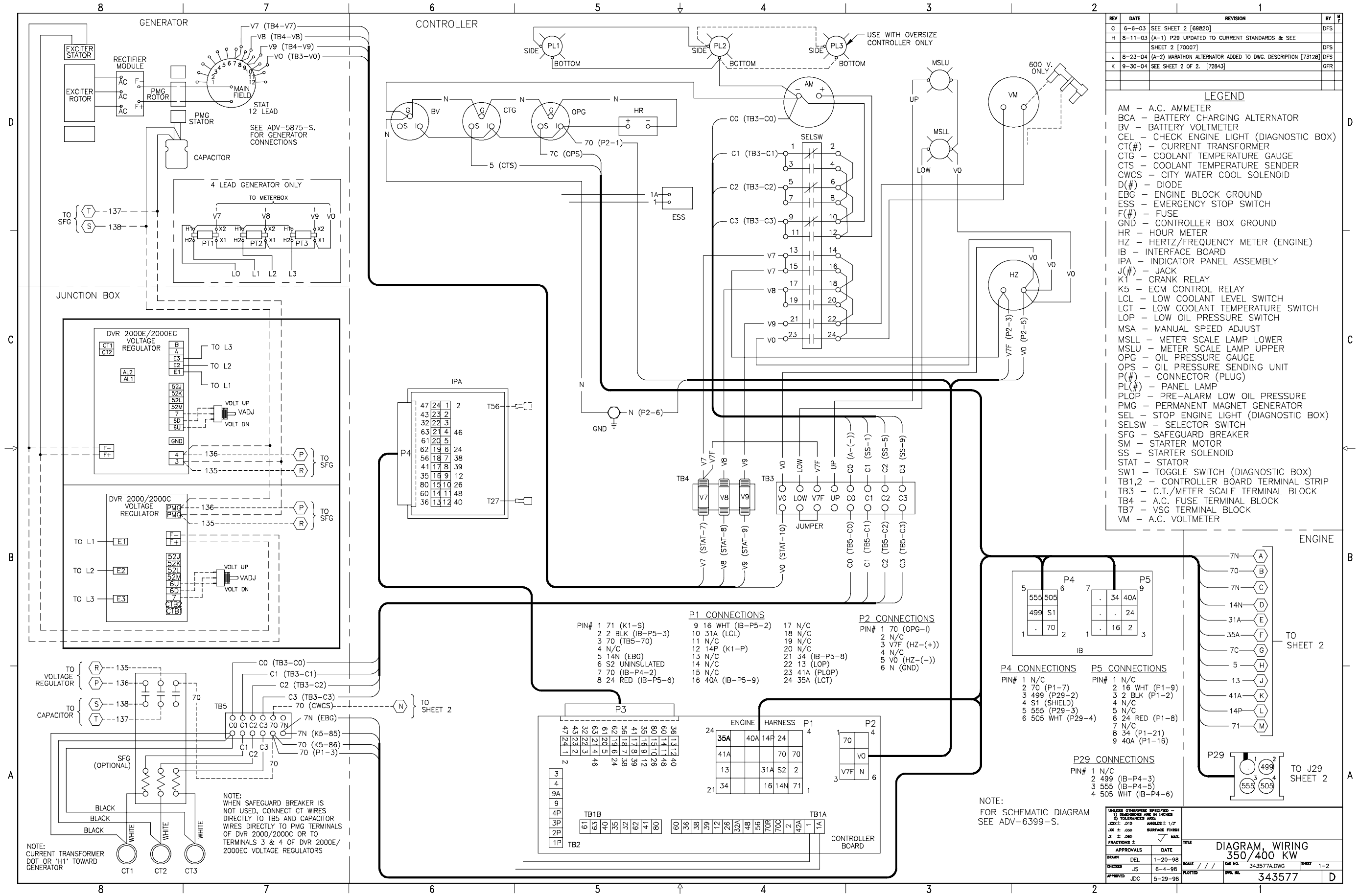

REV	DATE	REVISION	BY	M F
G	6-6-03	SEE SHEET 2 [69820]	DFS	
H	8-11-03	(A-1) P29 UPDATED TO CURRENT STANDARDS & SEE		
		SHEET 2 [70007]	DFS	
J	8-23-04	(A-2) MARATHON ALTERNATOR ADDED TO DWG. DESCRIPTION [73128]	DFS	
K	9-30-04	SEE SHEET 2 OF 2. [72843]	GFR	

LEGEND

AM – A.C. AMMETER
BCA – BATTERY CHARGING ALTERNATOR
BV – BATTERY VOLTMETER
CEL – CHECK ENGINE LIGHT (DIAGNOSTIC BOX)
CT(#) – CURRENT TRANSFORMER
CTG – COOLANT TEMPERATURE GAUGE
CTS – COOLANT TEMPERATURE SENDER
CWCS – CITY WATER COOL SOLENOID
D(#) – DIODE
EBG – ENGINE BLOCK GROUND
ESS – EMERGENCY STOP SWITCH
F(#) – FUSE
GND – CONTROLLER BOX GROUND
HR – HOUR METER
HZ – HERTZ/FREQUENCY METER (ENGINE)
IB – INTERFACE BOARD
IPA – INDICATOR PANEL ASSEMBLY
J(#) – JACK
K1 – CRANK RELAY
K5 – ECM CONTROL RELAY
LCL – LOW COOLANT LEVEL SWITCH
LCT – LOW COOLANT TEMPERATURE SWITCH
LOP – LOW OIL PRESSURE SWITCH
MSA – MANUAL SPEED ADJUST
MSLL – METER SCALE LAMP LOWER
MSLU – METER SCALE LAMP UPPER
OPG – OIL PRESSURE GAUGE
OPS – OIL PRESSURE SENDING UNIT
P(#) – CONNECTOR (PLUG)
PL(#) – PANEL LAMP
PLOP – PRE-ALARM LOW OIL PRESSURE
PMG – PERMANENT MAGNET GENERATOR
SEL – STOP ENGINE LIGHT (DIAGNOSTIC BOX)
SELSW – SELECTOR SWITCH
SFG – SAFEGUARD BREAKER
SM – STARTER MOTOR
SS – STARTER SOLENOID
STAT – STATOR
SW1 – TOGGLE SWITCH (DIAGNOSTIC BOX)
TB1,2 – CONTROLLER BOARD TERMINAL STRIP
TB3 – C.T./METER SCALE TERMINAL BLOCK
TB4 – A.C. FUSE TERMINAL BLOCK
TB7 – VSG TERMINAL BLOCK
VM – A.C. VOLTMETER

P1 CONNECTIONS

PIN# 1 71 (K1-S)
2 2 BLK (IB-P5-3)
3 70 (TB5-70)
4 N/C
5 14N (EBG)
6 S2 UNINSULATED
7 70 (IB-P4-2)
8 24 RED (IB-P5-6)
9 16 WHT (IB-P5-2)
10 31A (LCL)
11 N/C
12 14P (K1-P)
13 N/C
14 N/C
15 N/C
16 40A (IB-P5-9)
17 N/C
18 N/C
19 N/C
20 N/C
21 34 (IB-P5-8)
22 13 (LOP)
23 41A (PLOP)
24 35A (LCT)

P2 CONNECTIONS

PIN# 1 70 (OPG-I)
2 N/C
3 V7F (HZ-(+))
4 N/C
5 V0 (HZ-(-))
6 N (GND)

P4 CONNECTIONS

PIN# 1 N/C
2 70 (P1-7)
3 499 (P29-2)
4 S1 (SHIELD)
5 555 (P29-3)
6 505 WHT (P29-4)

P5 CONNECTIONS

PIN# 1 N/C
2 16 WHT (P1-9)
3 2 BLK (P1-2)
4 N/C
5 N/C
6 24 RED (P1-8)
7 N/C
8 34 (P1-21)
9 40A (P1-16)

P29 CONNECTIONS

PIN# 1 N/C
2 499 (IB-P4-3)
3 555 (IB-P4-5)
4 505 WHT (IB-P4-6)

UNLESS OTHERWISE SPECIFIED – 1) DIMENSIONS ARE IN INCHES 2) TOLERANCES ARE: .XXX ± .010 ANGLES ± 1/2° .XX ± .030 SURFACE FINISH .X ± .060 MAX. FRACTIONS ±

APPROVALS		DATE
DRAWN	DEL	1-20-98
CHECKED	JS	6-4-98
APPROVED	JDC	5-29-98

TITLE: DIAGRAM, WIRING 350/400 KW
SCALE / / / CAD NO. 343577A.DWG SHEET 1-2
PLOTTED DWG. NO. 343577 D

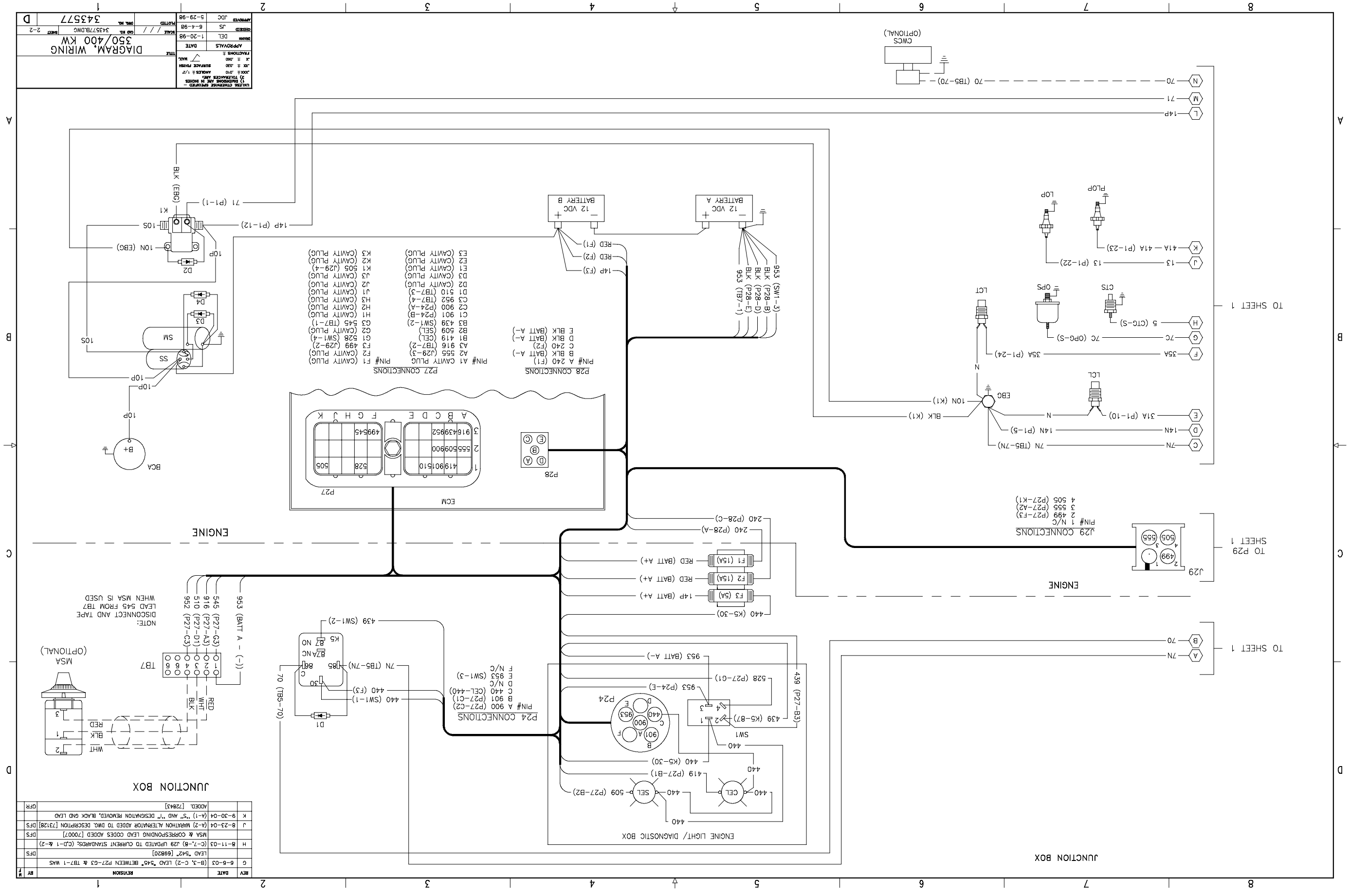
DIAGRAM, WIRING
350/400 KW
343577
TO SHEET 1
TO P29 SHEET 1
ENGINE
ECM
P28
P27
P28 CONNECTIONS
P27 CONNECTIONS
J29 CONNECTIONS
P24 CONNECTIONS
ENGINE LIGHT/ DIAGNOSTIC BOX
JUNCTION BOX
CWCS (OPTIONAL)
MSA (OPTIONAL)
BATTERY A
BATTERY B
12 VDC
BCA
B+
SS
SM
D2
D3
D4
K1
TB7
D1
SW1
CEL
SEL
J29
LCL
LCT
CTS
OPS
LOP
PLOP
EBG
NOTE:
DISCONNECT AND TAPE
LEAD 545 FROM TB7
WHEN MSA IS USED

DDC/MTU Power Generation
605 North 8th Street, Suite 501
Sheboygan, Wisconsin 53081 USA
Phone 920-451-0846, Fax 920-451-0843
ddcmtupowergeneration.com

MP-6338 9/06d

© 2002, 2006. All rights reserved.