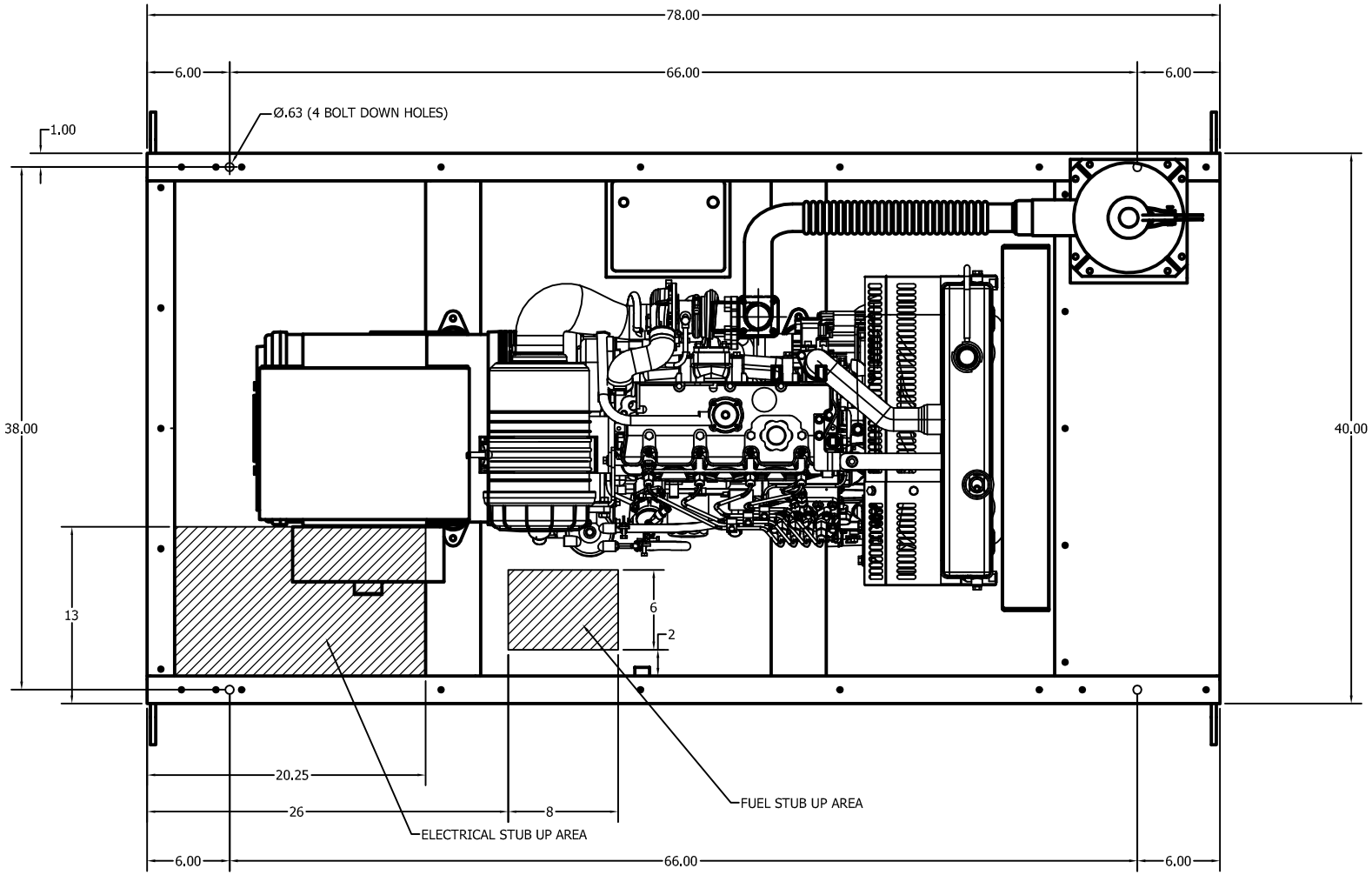

DRAWN John	6/16/2011	
CHECKED		TITLE
QA		
MFG		
APPROVED		
		SIZE C / DWG NO TD28 & TD30 STUB AREAS / REV
		SCALE / SHEET 1 OF 1